STOP READ THESE INSTRUCTIONS *BEFORE* FLYING!

KODO™ FPV

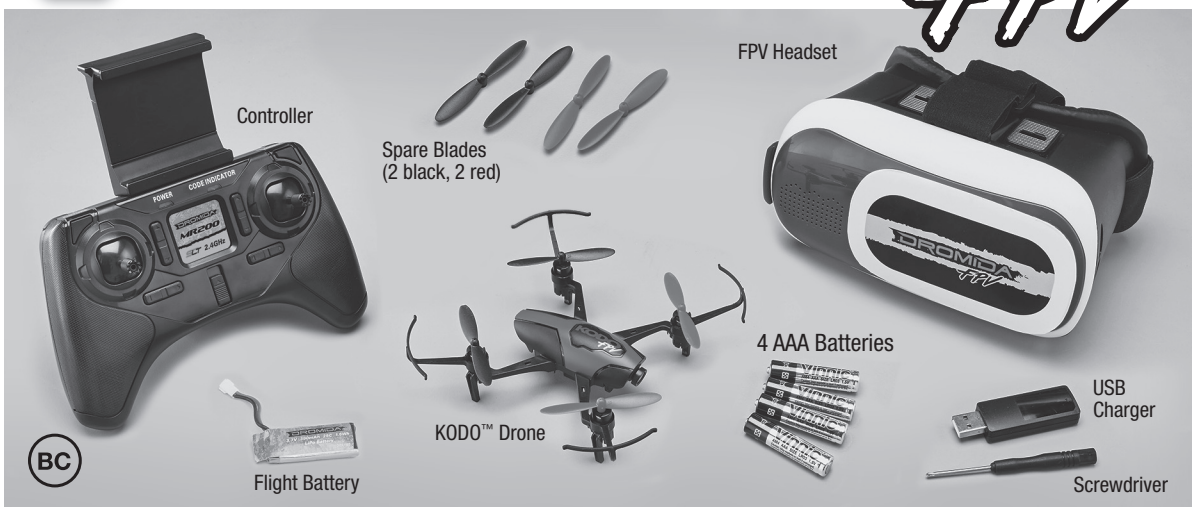

CONTROLLER

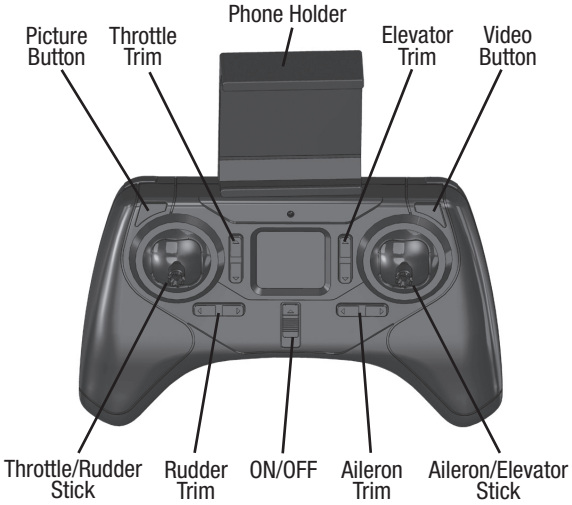

Remove the screw on the battery compartment cover. Take the cover off and insert 4 AAA batteries. Replace cover, securing with the screw.

SENSITIVITY ADJUSTMENT

Push down on the left stick to change the sensitivity of the controls.

Lowest (Default) BEEP!
Moderate BEEP! x2
Maximum BEEP! x3

- Do not mix old and new batteries.
- Do not mix alkaline, standard, or rechargeable batteries.

CHARGING the FLIGHT BATTERY

Plug charger into USB port or AC adapter (DIDP1125 not included) as shown and connect the battery. The red LED will flash slowly while the battery is charging. The LED will be steady when the battery is fully charged.

- **NEVER** leave the battery unattended while charging.
- **DO NOT** allow the USB port to power down while the charger is connected to the battery.
- **ALWAYS** unplug the charger from the USB port and the battery when charging is complete.
- The battery connector will only fit in one way.

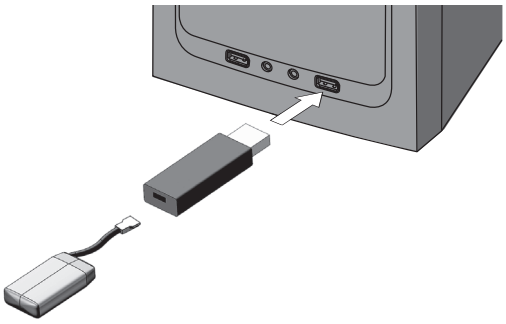

SETUP

Your KODO FPV comes with a Power-On Fail-Safe. This ensures that the motors will not start until the KODO has detected the controller.

1. Turn on the controller with the throttle at its lowest position.
2. Connect the battery to the KODO FPV and place it on a level surface. Listen for two beeps. The red LED at the back of the quadcopter will start flashing slowly.

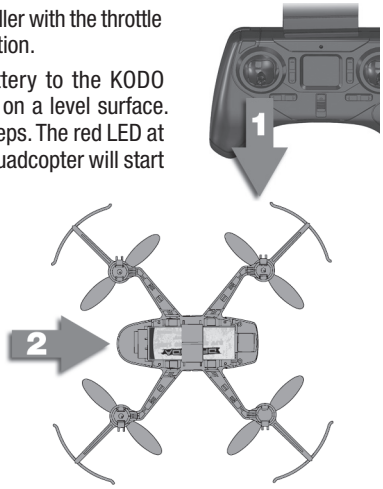

3. Move the throttle to its highest position. Listen for a beep.
4. Move the throttle back to its lowest position. Listen for three beeps.

The KODO FPV's motors are now armed and the quad is ready to fly. The red LED on the KODO FPV will become steady.

HOW to FLY

Basic Flight Advance the throttle slowly until your KODO FPV rises into the air. The controls are very sensitive and small stick movements should be used to the control the quadcopter. If you get into trouble and see that the KODO FPV is going to crash, move the throttle to its lowest position immediately.

The LED on the KODO FPV will flash slowly when the battery voltage is getting low. **Land as soon as possible and unplug the battery.** Always recharge the battery or batteries before storing the KODO FPV.

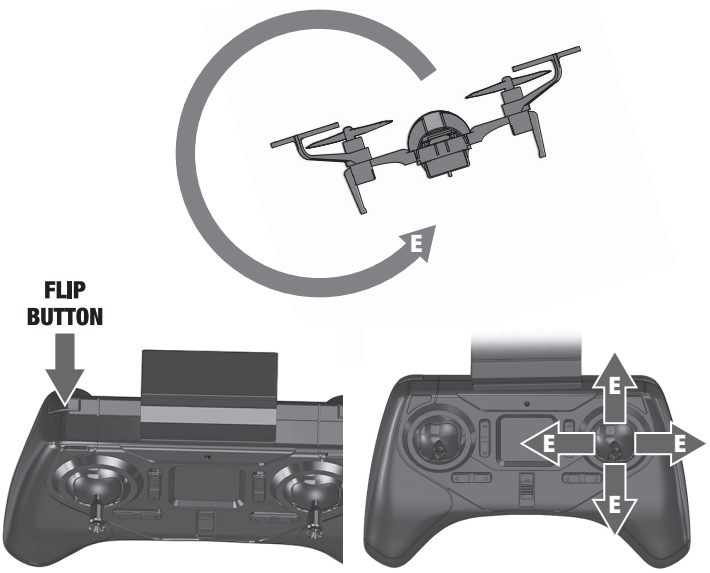

Flips Press the flip button and release it when the controller beeps. Move the right stick in any direction and release it when the KODO starts to flip.

The red LED on the KODO FPV will flash when the battery voltage is getting low. Land as soon as possible and charge the battery. The battery must be charged before it is stored. The battery must not be connected to the KODO FPV or the charger when stored. **ALWAYS disconnect the battery when it's not in use!**

CORRECTING DRIFT

It is normal for the KODO FPV to drift slightly. However, if it drifts in any direction consistently, press the trim button that is opposite the movement as many times as needed to eliminate the drift.

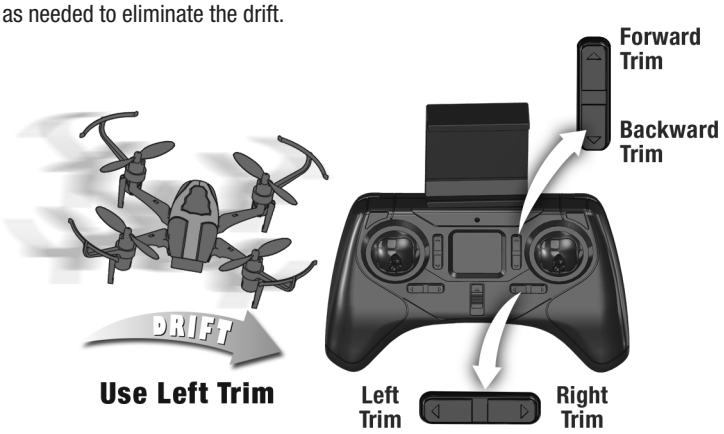

FPV CAMERA

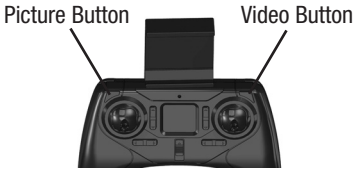

Press the picture button to capture a photo. BEEP!

Press the video button to start a video. BEEEEP!

The video button must be pressed again to stop and save the video on the card. The picture button will not operate while the camera is recording a video.

The FPV Camera can capture still photos and videos from the FPV feed going to your mobile device. The images will be stored in the Gallery in the app and also in your mobile device Photo Gallery. A photo can be captured while a video is being recorded.

The camera angle can be adjusted from straight ahead to about 70° down.

APP

The KODO FPV will link to an app on your iOS/Android based mobile device so the KODO can be flown in the FPV mode.

To download the app, use the QR code or open the App Store or Play Store on your device and enter "Hobbico" as a search term. Select the KodoView app.

iOS

Kodoview

Android

LINKING TO THE APP

With the KODO turned on, open the Wi-Fi settings on your device and select the "UFO-….." network

APP CONTROLS

Tap the **FLY** button to connect to the FPV camera.

Tap the "**?**" button to view the help screens.

Camera Button – Tap to capture a photo. A photo cannot be captured while a video is being recorded.

Video Button – Tap to start/stop a video. While the video is being recorded, a timer will be visible in the lower left corner of the screen.

Gallery Button – Tap to view photos and videos stored by the app. Open the storage folder and tap on the thumbnail to view the image/video.

To delete an image/video

- Tap the Select button.
- Tap on the files to be deleted.
- Tap on the Delete button.

REV Button – Tap on this button to invert the image.

Split Screen Button – This button changes the display to a split screen view so your device can be used with the VR Headset.

VR HEADSET

The VR Headset uses your smartphone to provide a more immersive image. The focus and the Interpupillary distance (IPD) can be adjusted. The headset also has a camera port that can be opened if you have an app that needs to overlay images onto the scene from the camera.

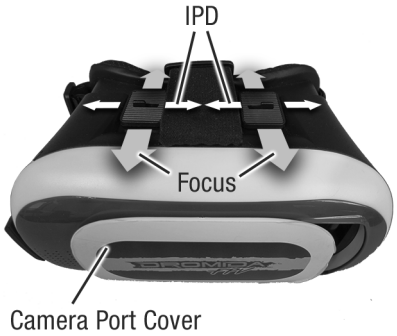

The headset has a camera tray that must be removed before the smartphone can be installed. The tray can hold most smartphones, but does not have room for a phone with a thick case. The phone should be linked to the KODO FPV and the app set to the split screen mode before it is installed in the tray.

FLYING FPV

Your phone can be mounted in the holder on the controller or inserted in the VR headset for a more immersive feel.

The range of the FPV camera is about 50 feet indoors, but may be less if the location has a lot of electromagnetic interference or metal objects in the walls.

If you are new to FPV, start by flying line of sight until you can maneuver the drone without having to think about which control to use. Practice by keeping both sticks centered and making quick stick movements to maneuver the KODO FPV.

When you are ready to start FPV, we recommend that a spotter be available to tell what the drone is doing. Master each of the following steps before moving to the next one.

Step 1

- Take off.
- Hover at about 3 feet.
- Move a few inches to the right in any direction and return to the hover point. Repeat moving left, forward, and backward.
- Slowly land.

The goal is to get used to the view from the camera, the sensitivity of the controls, and judging your height.

Step 2

- Take off.
- Fly slowly (about 10 feet away.)
- Turn around and return to the launch point.
- Slowly land.

The goal is to maintain your height until you are ready to land.

Step 3

- Set up a course.

Keep it simple at first. When you can fly while maintaining your altitude, set up a course with gates or obstacles at different heights.

The goals are to fly the entire course while maintaining the altitude and increase your speed around the course.

BLADE GUARD REPLACEMENT

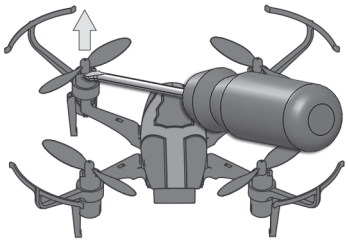

1. Carefully pry off the blade using a flat head screwdriver. **NOTE:** Do one corner at a time so you don't accidentally mix up the blades.

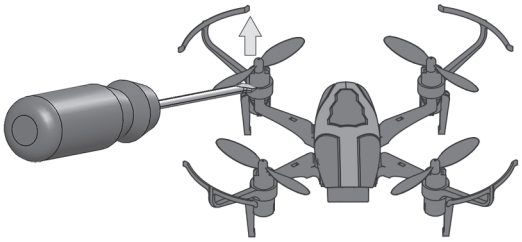

2. Pull the blade guard up and off the motor housing. Install the new guard and replace the rotor blade.

BLADE REPLACEMENT

NOTE: Rotor blades ***must*** be installed as shown.

- Carefully pry off the blade using a flat head screwdriver.
- Rotor blades are marked with an A or B.
- Yellow rotor blades are front and black are rear.
- Match the A and B blades to this drawing to ensure that the replacement blades are in the correct locations.

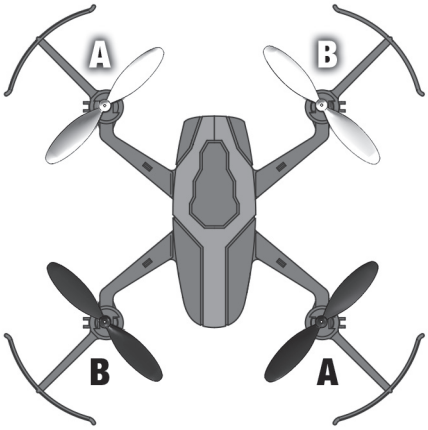

SENSOR CALIBRATION

It is normal for the KODO FPV to require minor corrections while hovering. If the quad has a strong tendency to drift in one direction, the sensors may need calibration.

1. Power up and link the controller and the KODO FPV.

2. Place the quad on a level surface.

3. Hold both sticks in the lower right corners. When the LED on the quad starts to flash rapidly, release the sticks but do not move the KODO FPV until the LED is steady again.

MOTOR REPLACEMENT

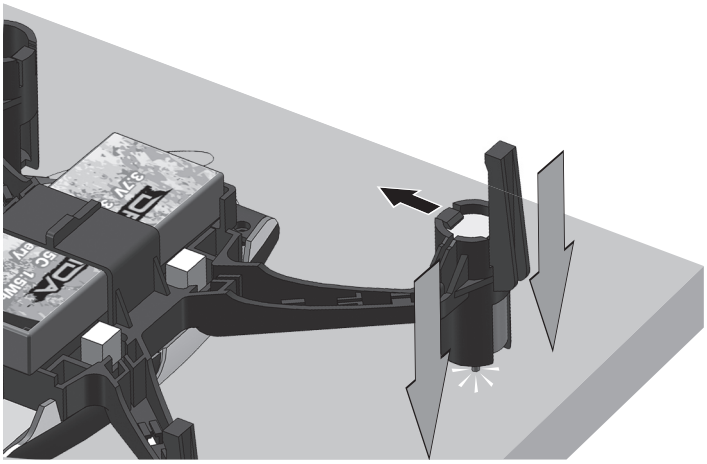

1. Remove the rotor blade from the motor.

2. Remove the blade guard from the motor housing.

3. While holding the motor locking tab open, place the motor shaft on a solid surface and push down on the arm to force the motor up and out of the motor housing.

4. Remove the wires from the brackets on the arms and unplug the assembly from the control board.

5. Before installing the new motor, make sure that the wires are the same color and are installed in the same positions in the connector.

TROUBLESHOOTING

PROBLEM: KODO will not stay level or drifts while hovering.

SOLUTION: (1) Calibrate the sensors – see the Sensor Calibration section.
(2) Check the rotor blades and motors for damage. A common problem is lint wrapped around the motor shaft.

PROBLEM: Red controller LED light flashes after linking.

SOLUTION: Replace with new AAA batteries.

PROBLEM: The KODO FPV will not respond to the controller.

SOLUTION: (1) Relink the controller and the KODO FPV.
(2) Make sure the flight battery is fully charged.

PROBLEM: Unable to flip but the KODO flies.

SOLUTION: Battery voltage is low and needs to be charged.

PROBLEM: Will not take off.

SOLUTION: (1) Check the rotor blades for proper installation.
(2) Battery is not fully charged.
(3) Check motors and props for damage.

PROBLEM: Drone is shaking.

SOLUTION: Check the canopy, chassis, motors and rotor blades for damage.

SAFETY PRECAUTIONS

Follow these safety precautions when operating this or any model drone.

- Adult supervision required.
- Do not touch the spinning blades or fly over people or animals.
- Keep your face and body as well as all spectators away from the rotors whenever the battery is connected.
- Stay clear of buildings, trees and power lines. **AVOID** flying in or near crowded areas. **DO NOT** fly close to people, children or pets.
- Maintain a safe pilot-to-drone distance while flying.
- Your KODO drone should not be considered a toy, but rather a small, working

model. If not operated correctly, the model could possibly cause injury to you or spectators and damage to property.

- Do not alter or modify the model, as doing so may result in an unsafe or unflyable model.
- You must check the operation of the model before every flight to ensure that the model has remained structurally sound.

CAUTION: Changes or modifications to this product not expressly approved by the party responsible for compliance may void the user's authority to operate the equipment.

BATTERY WARNINGS

This product is equipped with a rechargeable LiPo battery. Please pay attention to the following cautions for safe use:

- **ALWAYS KEEP OUT OF REACH OF CHILDREN AND ANIMALS.**
- **ALWAYS** recycle or dispose of LiPo batteries properly.
- Parental guidance is recommended when installing batteries.
- Land your model immediately when the LEDs flash to indicate that the battery power is low. Recharge the battery before attempting another flight. A dangerous situation can occur when attempting to recharge an over-discharged battery!
- Before turning off the transmitter, **ALWAYS** unplug your battery from the quadcopter after use.
- **NEVER** store your quadcopter with the battery plugged into the quadcopter.
- **NEVER** disassemble, allow puncture (eg: animal bite) or modify the battery pack in any way.
- Over-charging, using an incompatible charger, charging a damaged battery, can result in a catastrophic failure resulting in the battery swelling, emitting smoke, and/or catching **FIRE**!
- **DO NOT** charge your battery if it becomes swollen or hot. Let the battery cool and recycle it.
- **NEVER** use a common household fire extinguisher on a LiPo fire. If a Class "D" extinguisher is not available, keep a supply of sand accessible when charging. Dumping sand on the battery will extinguish a LiPo chemical fire.
- **NEVER** allow the batteries to become wet.
- **NEVER** put batteries in the pocket of any clothing.
- Only use the included charger or a charger designed for LiPo batteries to charge the flight battery.
- **DO NOT** attempt to use the included charger with NiCd or NiMH battery packs.
- **NEVER** attempt to charge LiPo cells with a charger set to another battery type.
- **NEVER** charge inside a vehicle.
- **DO NOT** leave the charger unattended while charging.
- **ALWAYS** place a battery being charged on a fireproof surface.
- Disconnect the battery and unplug the charger immediately if either becomes hot! However, it is normal for the charger to get warm.
- **NEVER** allow the battery temperature to exceed 140° F [60° C].
- Disconnect the battery from the charger and carefully move the battery to a fireproof location if the battery begins to swell or smoke!
- **ALWAYS** disconnect the battery and remove the charger from the USB port when not in use.
- It is best to store your batteries inside a metal container in a cool, dry location at 1/2 charge (3.7V per cell). Storing a fully discharged battery may cause irreversible damage to the battery.
- **DO NOT** dispose of battery into fire or heat.
- **DO NOT** use or store the battery near an open fire or heater.
- **DO NOT** strike, pierce or throw the battery against a hard surface.

For more information about LiPo batteries, please read the document at www.dromida.com/lipos.php

FCC STATEMENT AND ISEDC NOTICE

1. This device complies with Part 15 of the FCC Rules
Operation is subject to the following two conditions:

(1) This device may not cause harmful interference, and
(2) This device must accept any interference received, including interference that may cause undesired operation.

2. Changes or modifications not expressly approved by the party responsible for compliance could void the user's authority to operate the equipment.

Remark: This device is in accordance with the digital device grade B limitation and the 15th regulation of FCC. This limitation requires reasonable anti-interference protection around the residence. The device can transmit radio waves during use and can interrupt the mobile communication without proper installment. Interruption will occur for special device. If the device does interrupt the radio or television, please turn the device off and then turn it on to adjust. Below are some resolutions for your reference:

- Move the receiving antenna.
- Enlarge the distance between the device and receiver.
- Try to not connect the device and the receiver on the same circuit.
- Ask for professional help from experts.

3. This digital apparatus does not exceed the Class B limits for radio noise emissions from digital apparatus set out in the Radio Interference Regulations of ISEDC

NOTE: *THE MANUFACTURER IS NOT RESPONSIBLE FOR ANY RADIO OR TV INTERFERENCE CAUSED BY UNAUTHORIZED MODIFICATIONS TO THIS EQUIPMENT. SUCH MODIFICATIONS COULD VOID THE USER'S AUTHORITY TO OPERATE THE EQUIPMENT.*

90-DAY LIMITED WARRANTY

Dromida® guarantees this kit to be free from defects in both material and workmanship at the date of purchase. This warranty does not cover any component parts damaged by use or modification. In no case shall Dromida's liability exceed the original cost of the purchased kit. Further, Dromida reserves the right to change or modify this warranty without notice. In that Dromida has no control over the final assembly or material used for final assembly, no liability shall be assumed nor accepted for any damage resulting from the use by the user of the final user-assembled product. By the act of using the user-assembled product, the user accepts all resulting liability. If the buyer is not prepared to accept the liability associated with the use of this product, the buyer is advised to return this kit immediately in new and unused condition to the place of purchase. To make a warranty claim, go to dromida.com/support.

FCC ISEDC PRECAUTIONS

ISEDC RSS WARNING

This device complies with ISEDC licence-exempt RSS standard(s). Operation is subject to the following two conditions: (1) this device may not cause interference, and (2) this device must accept any interference, including interference that may cause undesired operation of the device.

Le présent appareil est conforme aux CNR d'ISEDC applicables aux appareils radio exempts de licence.
L'exploitation est autorisée aux deux conditions suivantes:
(1) l'appareil ne doit pas produire de brouillage, et
(2) l'utilisateur de l'appareil doit accepter tout brouillage radioélectrique subi, même si le brouillage est susceptible d'en compromettre le fonctionnement.

ISEDC Radiation Exposure Statement:
This equipment complies with ISEDC RF radiation exposure limits set forth for an uncontrolled environment.
This transmitter must not be co-located or operating in conjunction with any other antenna or transmitter.
For Quadcopter:This equipment should be installed and operated with minimum distance 20cm between the radiator& your body.

Cet appareil est conforme aux limitesd'exposition de rayonnement RF ISEDC établiespour un environnement non contr?lé.
Cetémetteur ne doit pas être co-implanté oufonctionner en conjonction avec toute autreantenne ou transmetteur
pour quadcopter:Cet équipement doit être installé et utiliséavec une distance minimale de 20cm entre leradiateur & votre corps.

DECLARATION OF CONFORMITY

Product: WiFi Camera Kodo FPV
Item number: DIDE0016
Equipment class: 1

Hobbico, Inc.
2904 Research Road
Champaign, IL USA 61826

The associated regulatory agencies of the following countries recognize the noted certifications to this product as authorized for sale and use.

FCC RADIATION EXPOSURE STATEMENT

This equipment complies with FCC radiation exposure limits set forth for an uncontrolled environment.

This transmitter must not be co-located or operating in conjunction with any other antenna or transmitter.

FCC ID: IYFW2
DROMIDA®
IC: 11104A-W2
DIDE0016
MADE IN CHINA

For Quadcopter:This equipment should be installed and operated with minimum distance 20cm between the radiator& your body.

REPLACEMENT PARTS

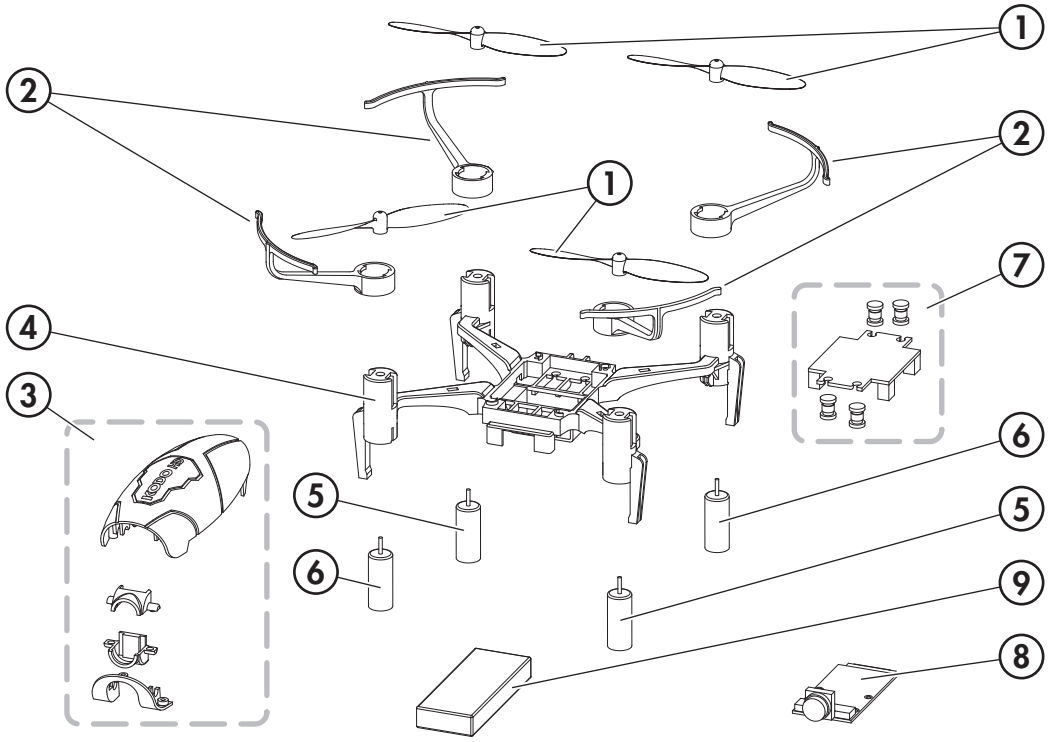

Part No.	Key No.	Description
DIDE1277	1	Rotor Blade Set Black & Red (4)
DIDE1553	2	Blade Guard Set (4)
DIDE1559	3	Upper Body
	3	Lens Housing top
	3	Lens Housing bottom
	3	Lens frame
DIDE1555	4	Frame
DIDE1556	5	Motor CCW R/F L/R (2)
DIDE1557	6	Motor CW L/F R/R (2)
DIDM1558	7	Control board
	7	Dampers
DIDZ1560	8	Camera board
DIDZ1559	8	Lens
DIDE1550	9	Battery
DIDE1552	10	Transmitter
DIDE1511	11	USB Charger

Instant FPV.

Vusion 250 Extreme FPV Race Pack

The revolutionary Vusion 250 Extreme FPV Race Pack blends innovation and convenience with the ultimate First Person View racing drone. It's the first – and only – injection-molded RTF 250-size racing drone to come with all essential FPV equipment installed. Everything's designed to work seamlessly together, for the ultimate flying experience!

- 100% complete and Ready-to-Fly FPV Race Pack – no soldering, assembly or kit-bashing required.
- The first – and only – injection-molded racing drone designed with FPV in mind.
- A quality LCD monitor and FPV goggles provide pilots with an immersive First Person View flying experience.
- 200mW video transmitter* uses 5.8GHz technology so pilots can watch flights in real time, without latency. The video transmitter features eight Raceband channels reserved for pro FPV racing.
- Modular, injection-molded construction adds impact resistance. Pieces insert and bolt on so pilots can be up and running in no time.
- A micro memory card slot makes it possible to transfer flying footage from the on-board 600TVL FPV camera without sacrificing video quality. Compatible with cards up to 32GB capacity.
- A 3S LiPo battery, AC charger and "AA" batteries round out the RTF package.

RISE0200

Turn your house upside down!

RISE Vusion House Racer 125 FPV

Get "up close and personal" with everything from the change in your sofa to those cobwebs in your ceiling fan. Explore every nook and cranny of your kitchen. Turn pillows and towels into an instant obstacle course. Zip and flip through every corner of every room. With the Vusion House Racer, there are no limits.

- 100% Ready-to-Fly Vusion House Racer Indoor FPV Drone.
- 600TVL FPV video camera.
- 25mW VTX 40-channel, 5-band.
- Tactic FPV-RM2 40-channel 5.8GHz FPV monitor with 4.3' LCD and external antenna (LXGHAM).
- Tactic FPV-G1 goggles (LXGHAR).
- RISE J2000 2.4GHz 6-channel radio system with Auto-Flip button and monitor holder.
- USB charger.
- (3) Flight modes: two gyro-assisted Stability Modes for beginners and Rate Mode for more advanced maneuvers.
- 1S 3.7V 650mAh LiPo battery delivers 6-8 minutes of flight time.
- (4) "AA" alkaline batteries.
- Extra blades.
- Screwdriver.
- Instruction manual.

RISE0207

© 2017 Dromida, a Hobbico® company HOBBICO™