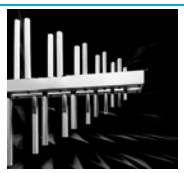
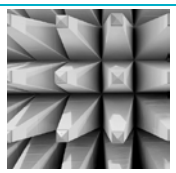

CTC advanced
member of RWTÜV group

Bundesnetzagentur

BNetzA-CAB-02/21-102

TEST REPORT

Test report no.: 1-0019/20-01-02

Testing laboratory

CTC advanced GmbH
Untertuerkheimer Strasse 6 – 10
66117 Saarbruecken / Germany
Phone: + 49 681 5 98 - 0
Fax: + 49 681 5 98 - 9075
Internet: http://www.ctcadvanced.com
e-mail: mail@ctcadvanced.com

Accredited Testing Laboratory:
The testing laboratory (area of testing) is accredited according to DIN EN ISO/IEC 17025 (2005) by the Deutsche Akkreditierungsstelle GmbH (DAkkS)
The accreditation is valid for the scope of testing procedures as stated in the accreditation certificate starting with the registration number: D-PL-12076-01.

Applicant

Marquardt GmbH
Schloss-Str. 16
78604 Rietheim-Weilheim / GERMANY
Phone: +49 7424 99-0
Contact: Mathias Kiefer
e-mail: mathias.kiefer@marquardt.de
Phone: +49 7424 99-28189

Manufacturer

Marquardt Schaltsysteme S.C.S.
Str. München Nr. 2
550018 Sibiu Zona Industriala Vest / ROMANIA

Test standard/s

FCC - Title 47 CFR Part 15	FCC - Title 47 of the Code of Federal Regulations; Chapter I; Part 15 - Radio frequency devices
RSS - 210 Issue 10	Spectrum Management and Telecommunications Radio Standards Specification - Licence-Exempt Radio Apparatus: Category I Equipment

For further applied test standards please refer to section 3 of this test report.

Test Item

Kind of test item:	**Ignition lock**
Model name:	**EZS**
FCC ID:	**IYZEZS**
IC:	**2701A-EZS**
Frequency:	125 kHz
Technology tested:	RFID
Antenna:	Integrated air coil antenna
Power supply:	12 V DC by external power supply
Temperature range:	-40°C to +70°C

This test report is electronically signed and valid without handwritten signature. For verification of the electronic signatures, the public keys can be requested at the testing laboratory.

Test report authorized:

cn=Christoph Schneider, o=CTC advanced GmbH, ou=SND-161128, email=Christoph.Schneider@ctcadvanced.com, c=DE
2020.06.05 13:29:56 +02'00'

Christoph Schneider
Lab Manager
Radio Communications

Test performed:

cn=Marco Bertolino, o=CTC advanced GmbH, ou=BTL-161128, email=Marco.Bertolino@ctcadvanced.com, c=DE
2020.06.05 08:04:35 +02'00'

Marco Bertolino
Lab Manager
Radio Communications

1 Table of contents

1 Table of contents 2

2 General information 3

2.1 Notes and disclaimer 3
2.2 Application details 3
2.3 Test laboratories sub-contracted 3

3 Test standard/s, references and accreditations 4

4 Test environment 5

5 Test item 5

5.1 General description 5
5.2 Additional information 5

6 Description of the test setup 6

6.1 Shielded fully anechoic chamber 7
6.2 Test setup for normalized measurement configurations 8

7 Sequence of testing 9

7.1 Sequence of testing radiated spurious 9 kHz to 30 MHz 9

8 Measurement uncertainty 10

9 Summary of measurement results 11

10 Additional comments 11

11 Measurement results 12

11.1 Occupied bandwidth 12
11.2 Field strength of the fundamental 14
11.3 Field strength of the harmonics and spurious 15

12 Observations 16

13 Glossary 17

14 Document history 18

15 Accreditation Certificate – D-PL-12076-01-05 18

2 General information

2.1 Notes and disclaimer

The test results of this test report relate exclusively to the test item specified in this test report. CTC advanced GmbH does not assume responsibility for any conclusions and generalizations drawn from the test results with regard to other specimens or samples of the type of the equipment represented by the test item.
The test report may only be reproduced or published in full. Reproduction or publication of extracts from the report requires the prior written approval of CTC advanced GmbH.
The testing service provided by CTC advanced GmbH has been rendered under the current "General Terms and Conditions for CTC advanced GmbH".
CTC advanced GmbH will not be liable for any loss or damage resulting from false, inaccurate, inappropriate or incomplete product information provided by the customer.
Under no circumstances does the CTC advanced GmbH test report include any endorsement or warranty regarding the functionality, quality or performance of any other product or service provided.
Under no circumstances does the CTC advanced GmbH test report include or imply any product or service warranties from CTC advanced GmbH, including, without limitation, any implied warranties of merchantability, fitness for purpose, or non-infringement, all of which are expressly disclaimed by CTC advanced GmbH.
All rights and remedies regarding vendor's products and services for which CTC advanced GmbH has prepared this test report shall be provided by the party offering such products or services and not by CTC advanced GmbH.
In no case this test report can be considered as a Letter of Approval.

This test report is electronically signed and valid without handwritten signature. For verification of the electronic signatures, the public keys can be requested at the testing laboratory.

2.2 Application details

Date of receipt of order:	2020-04-30
Date of receipt of test item:	2020-05-25
Start of test:	2020-05-26
End of test:	2020-05-26
Person(s) present during the test:	Mr. Mathias Kiefer

2.3 Test laboratories sub-contracted

None

3 Test standard/s, references and accreditations

Test standard	Date	Description
FCC - Title 47 CFR Part 15	-/-	FCC - Title 47 of the Code of Federal Regulations; Chapter I; Part 15 - Radio frequency devices
RSS - 210 Issue 10	December 2019	Spectrum Management and Telecommunications Radio Standards Specification - Licence-Exempt Radio Apparatus: Category I Equipment
RSS - Gen Issue 5 incl. Amendment 1	March 2019	Spectrum Management and Telecommunications Radio Standards Specification - General Requirements for Compliance of Radio Apparatus

Guidance	Version	Description
ANSI C63.4-2014	-/-	American National Standard for Methods of Measurement of Radio-Noise Emissions from Low-Voltage Electrical and Electronic Equipment in the Range of 9 kHz to 40 GHz
ANSI C63.10-2013	-/-	American National Standard of Procedures for Compliance Testing of Unlicensed Wireless Devices

Accreditation	Description
D-PL-12076-01-05	Telecommunication FCC requirements https://www.dakks.de/as/ast/d/D-PL-12076-01-05.pdf

4 Test environment

Temperature :	T_{nom} T_{max} T_{min}	+24 °C during room temperature tests No tests under extreme conditions required. No tests under extreme conditions required.
Relative humidity content :		42 %
Barometric pressure :		1018 hpa
Power supply :	V_{nom} V_{max} V_{min}	12 V DC by external power supply No tests under extreme conditions required. No tests under extreme conditions required.

5 Test item

5.1 General description

Kind of test item :	Ignition lock
Model name :	EZS
HMN :	-/-
PMN :	EZS
HVIN :	EZS
FVIN :	-/-
S/N serial number :	Radiated unit: 1181330904115034
Hardware status :	H11
Software status :	N/A
Firmware status :	N/A
Frequency band :	125 kHz
Type of radio transmission : Use of frequency spectrum :	modulated carrier
Type of modulation :	BPLM
Number of channels :	1
Antenna :	Integrated air coil antenna
Power supply :	12 V DC by external power supply
Temperature range :	-40°C to +70°C

5.2 Additional information

The content of the following annexes is defined in the QA. It may be that not all of the listed annexes are necessary for this report, thus some values in between may be missing.

Test setup and EUT photos are included in test report: 1-0019/20-01-01_AnnexA
1-0019/20-01-01_AnnexB
1-0019/20-01-01_AnnexC

6 Description of the test setup

Typically, the calibrations of the test apparatus are commissioned to and performed by an accredited calibration laboratory. The calibration intervals are determined in accordance with the DIN EN ISO/IEC 17025. In addition to the external calibrations, the laboratory executes comparison measurements with other calibrated test systems or effective verifications. Weekly chamber inspections and range calibrations are performed. Where possible, RF generating and signaling equipment as well as measuring receivers and analyzers are connected to an external high-precision 10 MHz reference (GPS-based or rubidium frequency standard).

In order to simplify the identification of the equipment used at some special tests, some items of test equipment and ancillaries can be provided with an identifier or number in the equipment list below (Lab/Item).

Agenda: Kind of Calibration

k	calibration / calibrated	EK	limited calibration
ne	not required (k, ev, izw, zw not required)	zw	cyclical maintenance (external cyclical maintenance)
ev	periodic self verification	izw	internal cyclical maintenance
Ve	long-term stability recognized	g	blocked for accredited testing
vlkl!	Attention: extended calibration interval		
NK!	Attention: not calibrated	*)	next calibration ordered / currently in progress

6.1 Shielded fully anechoic chamber

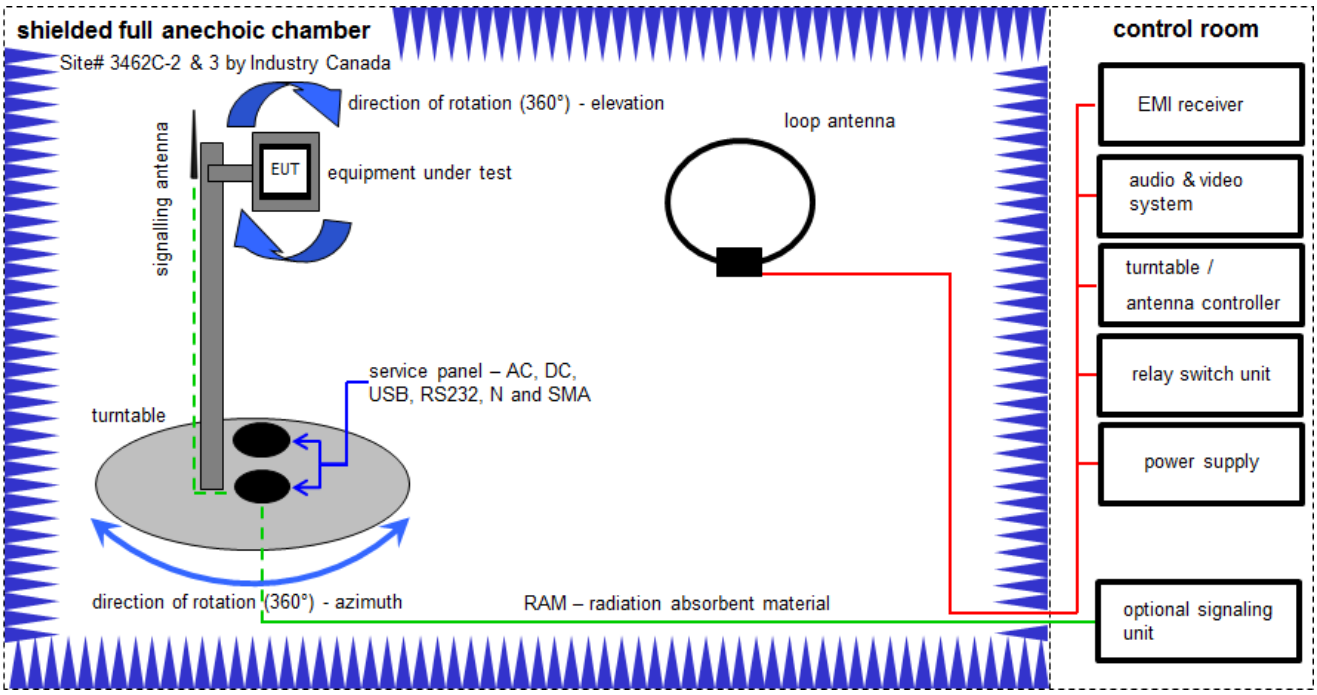

Measurement distance: loop antenna 3 meter

FS = UR + CA + AF
(FS-field strength; UR-voltage at the receiver; CA-loss of the signal path; AF-antenna factor)

Example calculation:
FS [dBµV/m] = 40.0 [dBµV/m] + (-35.8) [dB] + 32.9 [dB/m] = 37.1 [dBµV/m] (71.61 µV/m)

Equipment table:

No.	Lab / Item	Equipment	Type	Manufacturer	Serial No.	INV. No.	Kind of Calibration	Last Calibration	Next Calibration
1	A	DC power supply, 60Vdc, 50A, 1200 W	6032A	HP	2818A03450	300001040	vIKI!	12.12.2017	11.12.2020
2	A	Active Loop Antenna 9 kHz to 30 MHz	6502	EMCO	2210	300001015	vIKI!	13.06.2019	12.06.2021
3	A	Anechoic chamber	FAC 3/5m	MWB / TDK	87400/02	300000996	ev	-/-	-/-
4	A	Switch / Control Unit	3488A	HP	*	300000199	ne	-/-	-/-
5	A	EMI Test Receiver 20Hz- 26,5GHz	ESU26	R&S	100037	300003555	k	11.12.2019	10.12.2020
6	A	4U RF Switch Platform	L4491A	Agilent Technologies	MY50000037	300004509	ne	-/-	-/-
7	A	NEXIO EMV-Software	BAT EMC V3.19.1.20	EMCO	-/-	300004682	ne	-/-	-/-
8	A	PC	ExOne	F+W	-/-	300004703	ne	-/-	-/-

6.2 Test setup for normalized measurement configurations

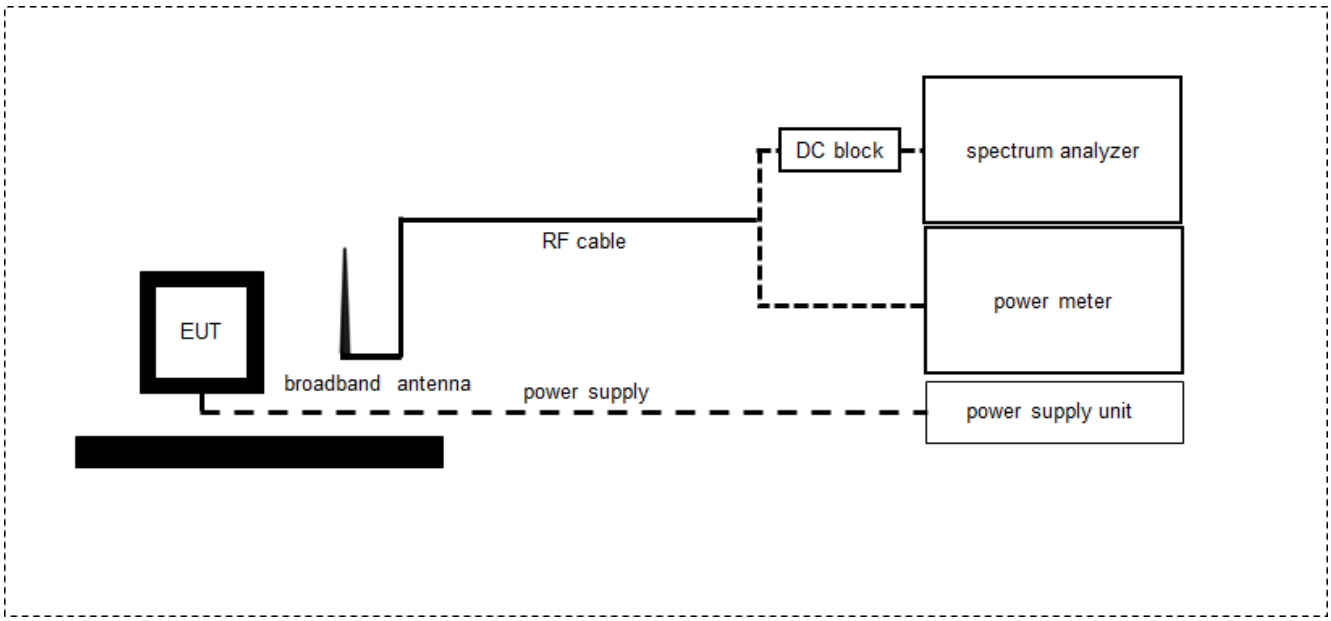

FS = UR + CA + AF
(FS-field strength; UR-voltage at the receiver; CA-loss of the signal path; AF-antenna factor)

Example calculation:
FS [dBµV/m] = 40.0 [dBµV/m] + (-35.8) [dB] + 32.9 [dB/m] = 37.1 [dBµV/m] (71.61 µV/m)

Equipment table:

No.	Lab / Item	Equipment	Type	Manufacturer	Serial No.	INV. No.	Kind of Calibration	Last Calibration	Next Calibration
1	A	Hygro-Thermometer	-/-, 5-45°C, 20-100%rF	Thies Clima	-/-	400000108	ev	-/-	-/-
2	A	PC Tester R005	Intel Core i3 3220/3,3 GHz, Prozessor	-/-	2V2403033A4523	300004589	ne	-/-	-/-
3	A	RF-Cable	ST18/SMAm/SMAm/48	Huber & Suhner	Batch no. 600918	400001182	ev	-/-	-/-
4	A	Synchron Power Meter	SPM-4	CTC	1	300005580	ev	-/-	-/-
5	A	DC Power Supply	HMP2020	Rohde & Schwarz	102850	300005517	vIKI!	12.12.2019	11.12.2021

7 Sequence of testing

7.1 Sequence of testing radiated spurious 9 kHz to 30 MHz

Setup

- The equipment is set up to simulate normal operation mode as described in the user manual or defined by the manufacturer.
- If the EUT is a tabletop system, it is placed on a table with 0.8 m height.
- If the EUT is a floor standing device, it is placed directly on the turn table.
- Auxiliary equipment and cables are positioned to simulate normal operation conditions as described in ANSI C 63.4.
- The AC power port of the EUT (if available) is connected to a power outlet below the turntable.
- Measurement distance is 3 m (see ANSI C 63.4) – see test details.
- EUT is set into operation.

Premeasurement*

- The turntable rotates from 0° to 315° using 45° steps.
- The antenna height is 1 m.
- At each turntable position the analyzer sweeps with positive-peak detector to find the maximum of all emissions.

Final measurement

- Identified emissions during the pre-measurement are maximized by the software by rotating the turntable from 0° to 360°.
- Loop antenna is rotated about its vertical axis for maximum response at each azimuth about the EUT. (For certain applications, the loop antenna plane may also need to be positioned horizontally at the specified distance from the EUT)
- The final measurement is done in the position (turntable and elevation) causing the highest emissions with quasi-peak (as described in ANSI C 63.4).
- Final levels, frequency, measuring time, bandwidth, turntable position, correction factor, margin to the limit and limit will be recorded. A plot with the graph of the premeasurement and the limit is stored.

*)Note: The sequence will be repeated three times with different EUT orientations.

8 Measurement uncertainty

Measurement uncertainty	
Test case	**Uncertainty**
Occupied bandwidth	± used RBW
Field strength of the fundamental	± 3 dB
Field strength of the harmonics and spurious	± 3 dB
Receiver spurious emissions and cabinet radiations	± 3 dB
Conducted limits	± 2.6 dB

9 Summary of measurement results

☒	No deviations from the technical specifications were ascertained
☐	There were deviations from the technical specifications ascertained
☐	This test report is only a partial test report. The content and verdict of the performed test cases are listed below.

TC Identifier	Description	Verdict	Date	Remark
RF-Testing	CFR Part 15 RSS 210 Issue 10 RSS Gen Issue 5	See table!	2020-06-05	-/-

Test specification clause	Test case	Temperature conditions	Power source conditions	C	NC	NA	NP	Remark
RSS Gen Issue 5 (6.6)	Occupied bandwidth	Nominal	Nominal	☒	☐	☐	☐	-/-
§ 15.209	Field strength of the fundamental	Nominal	Nominal	☒	☐	☐	☐	-/-
§ 15.209 RSS Gen Issue 5 (6.13)	Field strength of the harmonics and spurious	Nominal	Nominal	☒	☐	☐	☐	-/-
§ 15.109	Receiver spurious emissions and cabinet radiations	Nominal	Nominal	☐	☐	☒	☐	-/-
§15.107 §15.207	Conducted limits	Nominal	Nominal	☐	☐	☒	☐	-/-

Note: NA = Not applicable; NP = Not performed; C = Compliant; NC = Not compliant

10 Additional comments

Reference documents: 2020-02-03_Technical_description_EZS.pdf

Special test descriptions: None

Configuration descriptions: None

11 Measurement results

11.1 Occupied bandwidth

Measurement:

The emission bandwidth (x dB) is defined as the frequency range between two points, one above and one below the carrier frequency, at which the spectral density of the emission is attenuated x dB below the maximum in-band spectral density of the modulated signal.

Measurement parameters	
Detector:	Peak
Resolution bandwidth:	1 % – 5 % of the occupied bandwidth (300 Hz)
Video bandwidth:	≥ 3x RBW (1 kHz)
Trace mode:	Max hold
Analyser function:	99 % power function
Used test setup:	See sub clause 6.2 - A
Measurement uncertainty:	See sub clause 8

Limit:

IC
for RSP-100 test report coversheet only

Result:

99% emission bandwidth
21.4 kHz

Plot:

Plot 1: 99 % emission bandwidth

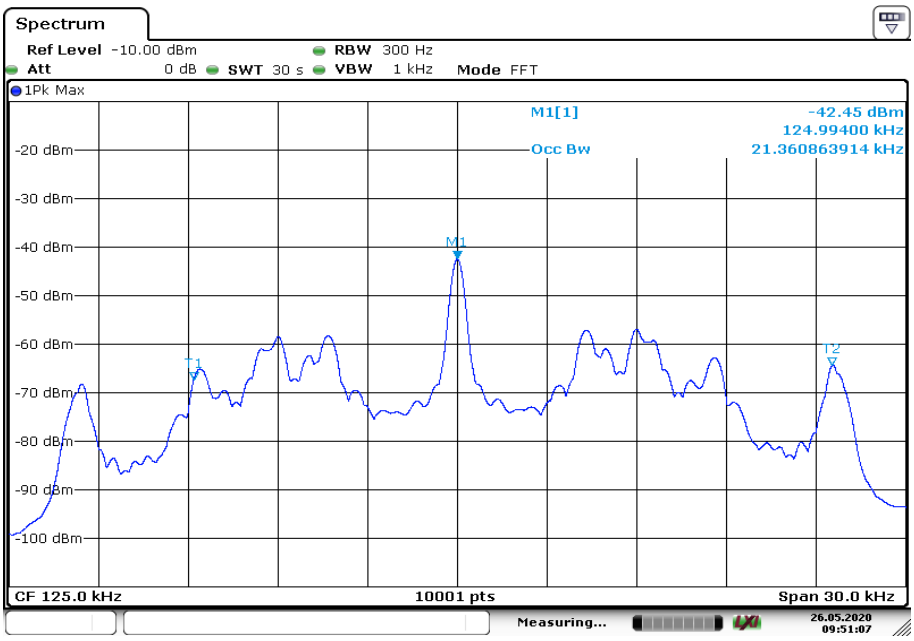

Date: 26.MAY.2020 09:51:07

11.2 Field strength of the fundamental

Measurement:

The maximum detected field strength for the carrier signal.

Measurement parameters	
Detector:	Quasi peak / peak (worst case)
Resolution bandwidth:	9 kHz
Video bandwidth:	≥ 3x RBW
Trace mode:	Max hold
Used test setup	See sub clause 6.2 - A
Measurement uncertainty:	See sub clause 8

Limit:

FCC & IC		
Frequency (MHz)	Field strength (dBµV/m)	Measurement distance (m)
1.705 – 30.0	2400/F (kHz) (19.2 dBµV/m @ 125 kHz)	300

Recalculation:

According to ANSI C63.10		
Frequency	Formula	Correction value
125 kHz	$FS_{limit} = FS_{max} - 40\log\left(\frac{d_{nearfield}}{d_{measure}}\right) - 20\log\left(\frac{d_{limit}}{d_{nearfield}}\right)$ FS_{limit} is the calculation of field strength at the limit distance, expressed in dBµV/m FS_{max} is the measured field strength, expressed in dBµV/m $d_{near\ field}$ is the λ/2π distance $d_{measure}$ is the distance of the measurement point from EUT d_{limit} is the reference limit distance	-82.1 (from 3 to 300m)

Result:

Field strength of the fundamental		
Frequency	125 kHz	
Distance	@ 3 m	@ 300 m
Measured / calculated value (peak measurement)	93.1 dBµV/m	11.0 dBµV/m
Measured / calculated value (QP measurement)	84.1 dBµV/m	2.0 dBµV/m

11.3 Field strength of the harmonics and spurious

Measurement:

The maximum detected field strength for the harmonics and spurious.

Measurement parameters	
Detector:	Quasi peak / average or peak (worst case – pre-scan)
Resolution bandwidth:	F < 150 kHz: 200 Hz 150 kHz < F < 30 MHz: 9 kHz 30 MHz < F < 1 GHz: 120 kHz
Video bandwidth:	F < 150 kHz: 1 kHz 150 kHz < F < 30 MHz: 100 kHz 30 MHz < F < 1 GHz: 300 kHz
Trace mode:	Max hold
Used test setup:	9 kHz to 30 MHz: see sub clause 6.1 - A
Measurement uncertainty:	See sub clause 8

Limit:

FCC & IC		
Frequency (MHz)	Field strength (dBµV/m)	Measurement distance (m)
0.009 – 0.490	2400/F(kHz)	300
0.490 – 1.705	24000/F(kHz)	30
1.705 – 30	30 (29.5 dBµV/m)	30
30 – 88	100 (40 dBµV/m)	3
88 – 216	150 (43.5 dBµV/m)	3
216 – 960	200 (46 dBµV/m)	3

Result:

Detected emissions			
Frequency (MHz)	Detector	Resolution bandwidth (kHz)	Detected value
All emissions were more than 10 dB below the limit. For emissions between 30 MHz and 1 GHz see result table below the plots.			

Plots:

Plot 1: 9 kHz – 30 MHz, magnetic emissions

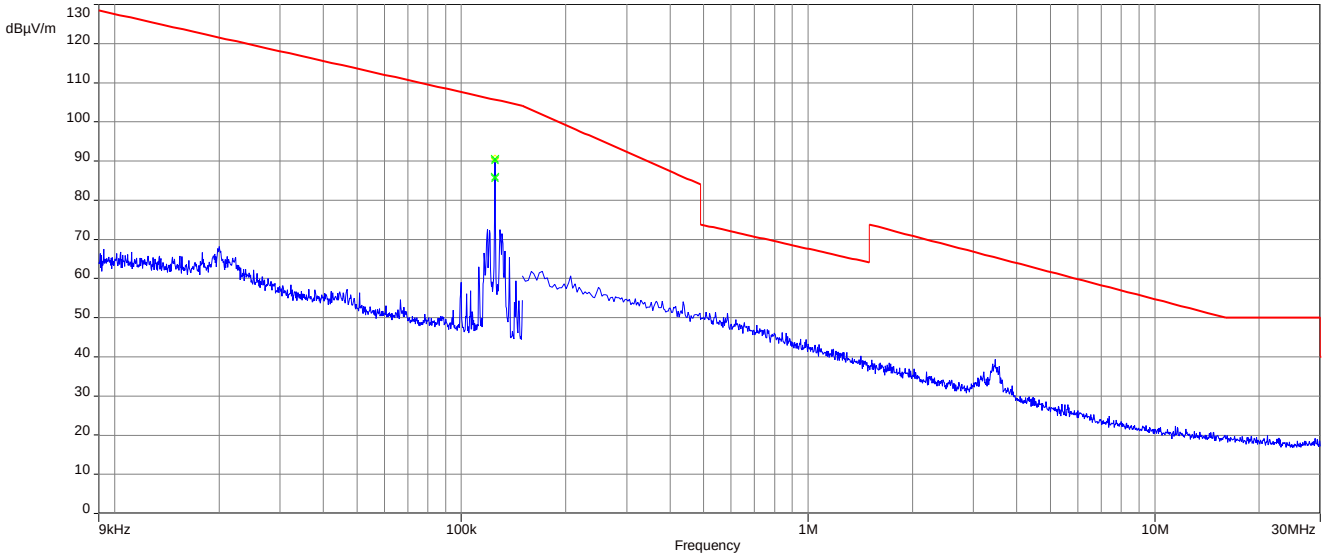

12 Observations

No observations except those reported with the single test cases have been made.

13 Glossary

EUT	Equipment under test
DUT	Device under test
UUT	Unit under test
GUE	GNSS User Equipment
ETSI	European Telecommunications Standards Institute
EN	European Standard
FCC	Federal Communications Commission
FCC ID	Company Identifier at FCC
IC	Industry Canada
PMN	Product marketing name
HMN	Host marketing name
HVIN	Hardware version identification number
FVIN	Firmware version identification number
EMC	Electromagnetic Compatibility
HW	Hardware
SW	Software
Inv. No.	Inventory number
S/N or SN	Serial number
C	Compliant
NC	Not compliant
NA	Not applicable
NP	Not performed
PP	Positive peak
QP	Quasi peak
AVG	Average
OC	Operating channel
OCW	Operating channel bandwidth
OBW	Occupied bandwidth
OOB	Out of band
DFS	Dynamic frequency selection
CAC	Channel availability check
OP	Occupancy period
NOP	Non occupancy period
DC	Duty cycle
PER	Packet error rate
CW	Clean wave
MC	Modulated carrier
WLAN	Wireless local area network
RLAN	Radio local area network
DSSS	Dynamic sequence spread spectrum
OFDM	Orthogonal frequency division multiplexing
FHSS	Frequency hopping spread spectrum
GNSS	Global Navigation Satellite System
C/N_0	Carrier to noise-density ratio, expressed in dB-Hz

14 Document history

Version	Applied changes	Date of release
-/-	Initial release	2020-06-05

15 Accreditation Certificate – D-PL-12076-01-05

first page	last page

DAkkS Deutsche Akkreditierungsstelle

Deutsche Akkreditierungsstelle GmbH

Entrusted according to Section 8 subsection 1 AkkStelleG in connection with Section 1 subsection 1 AkkStelleGBV
Signatory to the Multilateral Agreements of EA, ILAC and IAF for Mutual Recognition

Accreditation

The Deutsche Akkreditierungsstelle GmbH attests that the testing laboratory

CTC advanced GmbH
Untertürkheimer Straße 6-10, 66117 Saarbrücken

is competent under the terms of DIN EN ISO/IEC 17025:2005 to carry out tests in the following fields:

Telecommunication (FCC Requirements)

The accreditation certificate shall only apply in connection with the notice of accreditation of 11.01.2019 with the accreditation number D-PL-12076-01 and is valid until 21.04.2021. It comprises the cover sheet, the reverse side of the cover sheet and the following annex with a total of 5 pages.

Registration number of the certificate: **D-PL-12076-01-05**

Frankfurt am Main, 11.01.2019

Dipl.-Phys. Uwe Zimmermann
Head of Division

Deutsche Akkreditierungsstelle GmbH

Office Berlin
Spittelmarkt 10
10117 Berlin

Office Frankfurt am Main
Europa-Allee 52
60327 Frankfurt am Main

Office Braunschweig
Bundesallee 100
38116 Braunschweig

The publication of extracts of the accreditation certificate is subject to the prior written approval by Deutsche Akkreditierungsstelle GmbH (DAkkS). Exempted is the unchanged form of separate disseminations of the cover sheet by the conformity assessment body mentioned overleaf.

No impression shall be made that the accreditation also extends to fields beyond the scope of accreditation attested by DAkkS.

The accreditation was granted pursuant to the Act on the Accreditation Body (AkkStelleG) of 31 July 2009 (Federal Law Gazette I p. 2625) and the Regulation (EC) No 765/2008 of the European Parliament and of the Council of 9 July 2008 setting out the requirements for accreditation and market surveillance relating to the marketing of products (Official Journal of the European Union L 218 of 9 July 2008, p. 30). DAkkS is a signatory to the Multilateral Agreements for Mutual Recognition of the European co-operation for Accreditation (EA), International Accreditation Forum (IAF) and International Laboratory Accreditation Cooperation (ILAC). The signatories to these agreements recognise each other's accreditations.

The up-to-date state of membership can be retrieved from the following websites:
EA: www.european-accreditation.org
ILAC: www.ilac.org
IAF: www.iaf.nu

Note: The current certificate annex is published on the website (link see below) of the Accreditation Body DAkkS or may be received by CTC advanced GmbH on request

https://www.dakks.de/as/ast/d/D-PL-12076-01-05.pdf

################################ END OF TEST REPORT ################################