ROSEMAN

A LEGACY OF INNOVATION

WAF User Manual

FuelFocus™ FMS System

WAF– Installation Guide

Contents

RFU– Installation Guide 2

1. Important notice 4

1.1. FCC Statements 4

2. Read the Manual 5

3. FuelFocus™ System Hardware 5

3.1. WAF System Components: 5

3.1.1. WAF Set Box- Wireless Automated Fueling 6

3.1.2. Line Protector (RFU Adapter) 6

3.1.3. Wireless Automated Fueling (WAF) Unit Installation 7

3.1.3.1. WAF Mast Installation 8

4. Wireless Nozzle Reader (WNR) 10

5. Small Vehicle Identification Device (SVID) 11

6. Fuel Inlet Antenna (FIA) 12

7. Fleet Journal Type 3 12

Revisions Follow-up

Rev.	ECO No.	Description	Date	Approved
A00		Release	11/09/2022	Ilan Shalit
A01		FCC warning correction	22/0/2022	Ilan Shalit

1. Important notice

Roseman cannot guarantee the RF Vehicle ID Box installation techniques discussed herein are complete and effective on every make, model and year of vehicle and equipment now in the marketplace, or in the future.

At times vehicle manufacturers make changes to the engine computer (ECU/ECM), wiring and/or electronics, with new model years and during mid-year production. After-market accessories may also impact the installation of the FJ3 RF Vehicle ID Box.

Roseman provides updates as soon possible after discovering installation challenges, new OBD CAN types or anything effecting proper operation. We request feedback from many knowledgeable Automotive Technicians working with this technology.

If installation issues arise with new model years or unique equipment, we request detailed feedback so corrections and enhancement may be made in a timely fashion. By working together, we can assure that the FuelFocus system remains the finest available.

1.1. FCC Statements

This device complies with part 15 of the FCC Rules. Operation is Subject to the following two conditions:

(1) This device ma not cause harmful interference, and

(2) This device must accept any interference received, including interference that may cause undesired operation.

Changes or modification not expressly approved by the party responsible for compliance could void the user's authority to operate this equipment.

Note: This equipment has been tested and found to comply with the limits for a Class B digital device, pursuant to part 15 of the FCC Rules.

These limits are designed to provide reasonable protection against harmful interference in a residential installation. This equipment generates, uses and can radiate radio frequency energy and, if not installed and used in accordance with the instructions, may cause harmful interference to radio communications. However, there is no guarantee that interference will not occur in a particular installation. If this equipment does cause harmful interference to radio or television reception, which can be determined by turning the equipment off and on, the user is encouraged to try to correct the interference by one or more of the following measures:

- Reorient or relocate the receiving antenna.
- Increase the separation between the equipment and receiver.
- Connect the equipment into an outlet on a circuit different from that to which the receiver is connected.
- Consult the dealer or and experienced radio/TV technician for help.

WARNIN – RF EXPOSURE COMPLIANCE: This equipment should be installed and operated with minimum distance 20cm between the radiator and your body. Keep not collocate or operate the antenna used with the device in conjunction with any other antenna or transmitter.

2. Read the Manual

Read, understand, and follow this manual and the other labels or related materials supplied with the equipment. If you do not understand a procedure, call Roseman authorized service center.

3. FuelFocus™ System Hardware

3.1. WAF System Components:

- Wireless Automated Fueling (WAF) Unit - installed above the FuelFocus™ Controller or the station roof
- Wireless Nozzle Reader - installed on the fuel nozzle
- Small Vehicle Identification Device (SVID) – installed in the vehicle
- Fuel Inlet Antenna (FIA) - installed in the vehicle
- Fleet Journal – Installed in the vehicle
- Hardwire FIA adapter- installed in the vehicle

3.1.1. WAF Set Box- Wireless Automated Fueling

The 2.4 GHz WAF is a wireless transceiver that in conjunction with the Wireless Nozzle Reader (WNR) enables it to identify the vehicle automatically and from which nozzle the vehicle is fueling.

During the fueling, the WNR sends a refresh signal to the WAF unit that the fueling is still in progress until it completes.

The receiving range of the WAF Receiver is 0 – 300 feet.

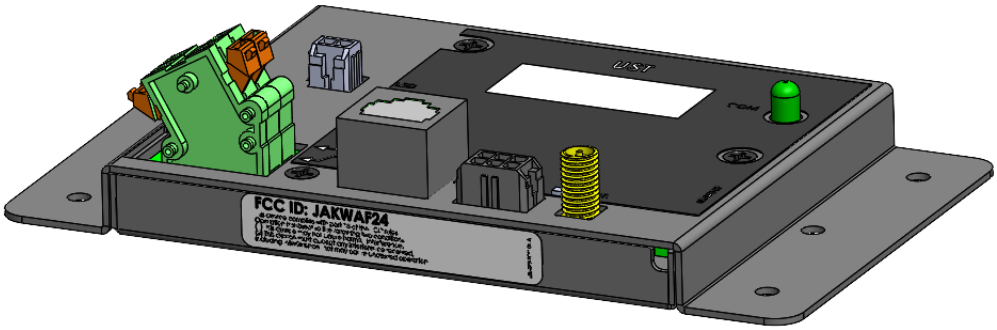

3.1.2. Line Protector (RFU Adapter)

The line protector (RFU Adapter) protects the system from lightning strikes and converts the communication from RS232 (CPU) to the RS485 (WAF Unit).

3.1.3. Wireless Automated Fueling (WAF) Unit Installation

1. At locations with one FuelFocus™ Controller, the WAF Receiver should be installed with the integrated mast supplied to the back of the FuelFocus™ Controller.
2. At locations with multiple FuelFocus™ Controllers, one WAF Receiver should be installed centrally to all fueling positions as possible. Use of the integrated mast assembly is optional in this setup. Consult with the Roseman technician for more information. In this environment, install the FGG and pipemux.exe programs on the FuelFocus™ Controller that is connected to the WAF Receiver.
3. Pipemux.ini setting Example (refer to station Layout drawing below)

Open and set on pipemux.ini file as follows:

Computer_1=172.22.1.48 (127.0.0.1) - IP for FuelFocus™ Controller 1 with the RF antenna

Computer_2=172.22.1.49 - IP for FuelFocus™ Controller 2 on another fueling islands.

[Pumps] Assign the pumps according to the FuelFocus™ Controller

Pump_2=1

Pump_3=1

Pump_4=1

Pump_5=2

Pump_6=2

Pump_7=2

Pump_8=2

Station Layout Example

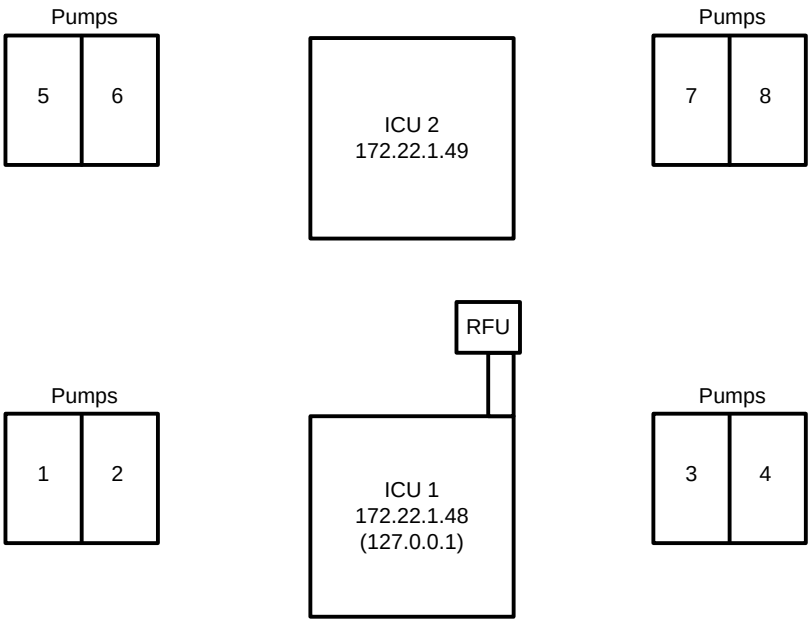

Figure 1 : Station Layout Diagram

NOTE:

It is recommended to locate the WAF Mast in the center of the Fueling station.

Refer to WAF MAST SET Installation Guide.

3.1.3.1. WAF Mast Installation

STEP 1

Install the WAF Set Box on the Upper Mast Mounting bracket

STEP 2

Install the WAF Set Box to the Upper Mast bracket with two screws M5X16 and the attached washers and nuts by using M5 open wrench.

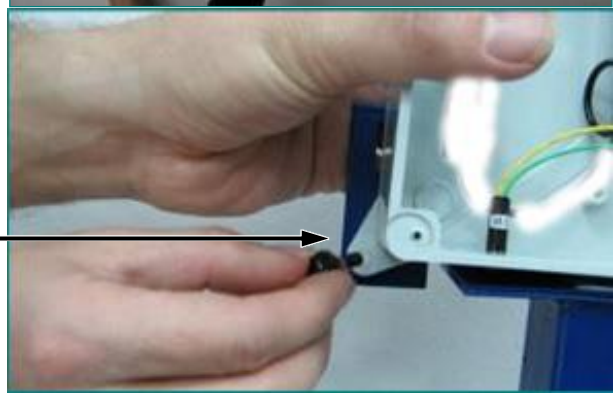

Connect the Ground wire to the (-) Ground terminal

Route the cat5 cable through

STEP 3

STEP 4

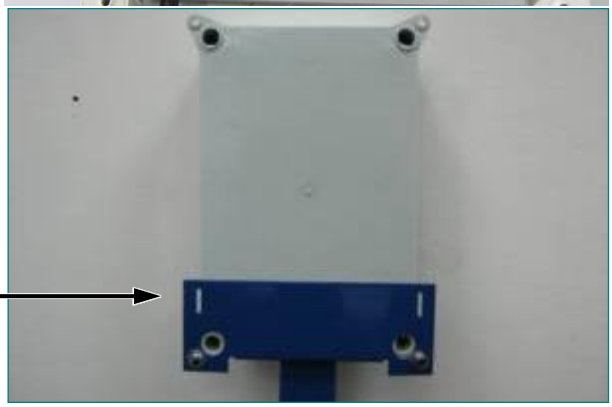

NOTE:

In case the WAF is installed in a different and far structure, there is a need to connect the jumper JP1 on the RFU adapter.

4. Wireless Nozzle Reader (WNR)

The Wireless Nozzle Reader (WNR) is an active stand-alone device fitted to the nozzle. The WNR is a robust system enclosed in rugged plastic, designed to operate in harsh fuel environments. It is easy to install and does not require any adaptations to the nozzle.

The nozzle is inserted into a vehicle fuel tank inlet. The WNR automatically reads the vehicle identification device data and transmits it to the Island Control Unit (ICU) via the Wireless Automated Fueling (WAF) unit to check the tag authentication and verification. Only then will authorization be approved and fuel dispensed into the vehicle.

Throughout the course of fueling the WNR transmits refresh signals to the WAF unit showing that the fueling is in progress and will do so until the transaction is completed.

The nozzle tag contains a replaceable battery that is able to operate for approximately up to 2 years depending on conditional usage.

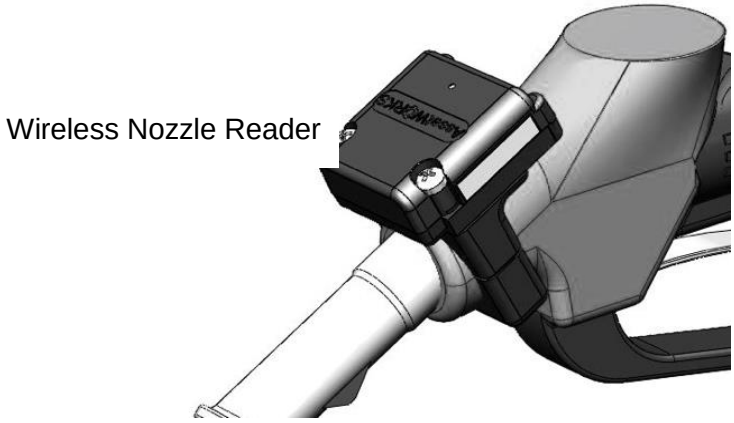

5. Small Vehicle Identification Device (SVID)

The SVID is a Small Vehicle Identification Device, which authorizes the use of the dispenser. It contains the vehicle identification information. The SVID is setup initially by wireless programming.

The SVID contains an inner battery source and antenna wires connected to the fuel inlet antenna (FIA) or for communication to the Wireless Nozzle Reader on the fuel pump located in the fueling station. The FuelFocus Programmer is used to program the SVID device after it is installed in the vehicle.

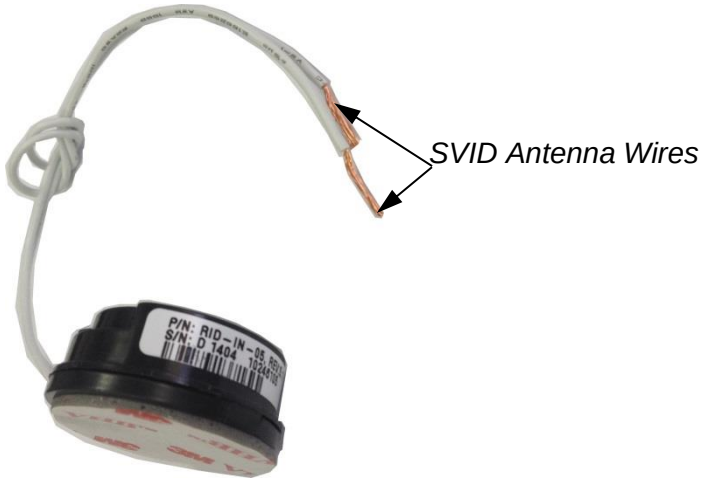

Figure 2 SVID with antenna wires connected to the FIA

Figure 3 SVID with integrated internal antenna (Inbox)

6. Fuel Inlet Antenna (FIA)

The Fuel Inlet Antenna (FIA) is an antenna that mounts to the vehicle's fuel tank inlet. The FIA is connected to the RF Vehicle Identification Box (FJ3) with shielded cable and provides the ability to identify and read the nozzle tag for transmission to the FuelFocus™ Controller and to make sure the dispensing nozzle stays in the vehicle fuel tank inlet during the fueling. As soon as the nozzle tag is removed from the fuel tank, the flow of fuel is terminated.

Roseman has a variety of diameters and models to choose from. Contact
Your dealer for ordering instructions.

7. Fleet Journal Type 3

The Fleet Journal is a modular web-based vehicle recorder which stores the vehicle usage data, which includes the start and end times of a trip, beginning and ending odometer readings, maximum speed and more. The Fleet Journal supports CANBUS connections (J1708, J1939, ODBII and J2284) for collecting data from a variety of vehicles. The Fleet Journal supports Off-line - download and GPS coordinates.