S T S LAB

FCC TEST REPORT

Report No: STS1606211F01

Issued for

RISCO LTD.

14 Hachoma Street,Rishon Lezion,75655,Israel

Product Name:	WL Flood Detector 915 MHz
Brand Name:	RISCO
Model Name:	RWT6F
Series Model:	N/A
FCC ID:	JE4RWT6F915
Test Standard:	FCC Part 15.249

Any reproduction of this document must be done in full. No single part of this document may be reproduced without permission from STS, All Test Data Presented in this report is only applicable to presented Test sample.

Shenzhen STS Test Services Co., Ltd.
1/F., Building B, Zhuoke Science Park, No.190,Chongqing Road,
Fuyong Street, Bao'an District, Shenzhen, Guangdong,China
TEL: +86-755 3688 6288 FAX: +86-755 3688 6277 E-mail:sts@stsapp.com

TESTING • CONSULTING • SOLUTION • CERTIFICATION
APPROVAL

TEST RESULT CERTIFICATION

Applicant's name : RISCO LTD.

Address : 14 Hachoma Street,Rishon Lezion,75655,Israel

Manufacture's Name : RISCO LTD.

Address : Sderot Yahalom 6 Kiryat Gat, Israel

Product description

Product name : WL Flood Detector 915 MHz

Brand name : RISCO

Model and/or type reference : RWT6F

Standards : FCC Part15.249

Test procedure : ANSI C63.4-2014
ANSI C63.10-2013

This device described above has been tested by STS, and the test results show that the equipment under test (EUT) is in compliance with the FCC requirements. And it is applicable only to the tested sample identified in the report.
This report shall not be reproduced except in full, without the written approval of STS, this document may be altered or revised by STS, personal only, and shall be noted in the revision of the document.

Date of Test :

Date of performance of tests : 27 June. 2016 ~05 July. 2016

Date of Issue : 06 July. 2016

Test Result : **Pass**

Testing Engineer : (Tony Liu)

Technical Manager : (Vita Li)

Authorized Signatory : (Bovey Yang)

Table of Contents **Page**

1. SUMMARY OF TEST RESULTS **5**

1.1 TEST FACTORY 6

1.2 MEASUREMENT UNCERTAINTY 6

2. GENERAL INFORMATION **7**

2.1 GENERAL DESCRIPTION OF EUT 7

2.2 DESCRIPTION OF TEST MODES 8

2.3 BLOCK DIGRAM SHOWING THE CONFIGURATION OF SYSTEM TESTED 8

2.4 DESCRIPTION OF SUPPORT UNITS 9

2.5 EQUIPMENTS LIST FOR ALL TEST ITEMS 10

3. EMC EMISSION TEST **11**

3.1 CONDUCTED EMISSION MEASUREMENT 11

3.2 RADIATED EMISSION MEASUREMENT 14

4. BANDWIDTH TEST **22**

4.1 TEST PROCEDURE 22

4.2 TEST SETUP 22

4.3 EUT OPERATION CONDITIONS 22

4.4 TEST RESULTS 23

5. ANTENNA REQUIREMENT **24**

5.1 STANDARD REQUIREMENT 24

5.2 EUT ANTENNA 24

APPENDIX I- PHOTOS OF TEST SETUP **25**

Revision History

Rev.	Issue Date	Report NO.	Effect Page	Contents
00	06 July. 2016	STS1606211F01	ALL	Initial Issue

1. SUMMARY OF TEST RESULTS

Test procedures according to the technical standards:

FCC Part 15.249,Subpart C			
Standard Section	Test Item	Judgment	Remark
15.207	Conducted Emission	N/A	
15.203	Antenna Requirement	Pass	
15.249	Radiated Emission	Pass	
15.249	20dB Bandwidth	Pass	

NOTE:

(1)" N/A" denotes test is not applicable in this Test Report

(2)All tests are according to ANSI C63.4-2014 and ANSI C63.10-2013

1.1 TEST FACTORY

Shenzhen STS Test Services Co., Ltd.
Add. : 1/F., Building B, Zhuoke Science Park, No.190, Chongqing Road, Fuyong Street, Bao'an District, Shenzhen, Guangdong,China
CNAS Registration No.: L7649;
FCC Registration No.: 842334; IC Registration No.: 12108A-1

1.2 MEASUREMENT UNCERTAINTY

The reported uncertainty of measurement **y** ± **U**，where expended uncertainty **U** is based on a standard uncertainty multiplied by a coverage factor of **k=2**，providing a level of confidence of approximately **95** %。

No.	Item	Uncertainty
1	Conducted Emission (9KHz-150KHz)	±2.88Db
2	Conducted Emission (150KHz-30MHz)	±2.67Db
3	RF power,conducted	±0.70Db
4	Spurious emissions,conducted	±1.19Db
5	All emissions,radiated(<1G) 30MHz-200MHz	±2.83Db
6	All emissions,radiated(<1G) 200MHz-1000MHz	±2.94Db
7	All emissions,radiated(>1G)	±3.03Db
8	Temperature	±0.5°C
9	Humidity	±2%

2. GENERAL INFORMATION

2.1 GENERAL DESCRIPTION OF EUT

Equipment	WL Flood Detector 915 MHz
Trade Name	RISCO
Model Name	RWT6F
Series Model	N/A
Model Difference	N/A
Product Description	The EUT is a WL Flood Detector 915 MHz Operation Frequency: 915MHz Modulation Type: OOK Antenna Designation: Spring Antenna Antenna Gain(Peak) 3 dBi Based on the application, features, or specification exhibited in User's Manual, the EUT is considered as an ITE/Computing Device. More details of EUT technical specification, please refer to the User's Manual.
Channel List	Please refer to the Note 2.
Battery	DC 3V,20mAh

Note:

1. For a more detailed features description, please refer to the manufacturer’s specifications or the User’s Manual.

2.

Channel	Frequency (MHz)	Channel	Frequency (MHz)
01	915		

3. Table for Filed Antenna

Ant	Brand	Model Name	Antenna Type	Connector	Gain (dBi)	NOTE
1	RISCO	RWT6F	Spring Antenna	NA	3	Antenna

The EUT antenna is spring loaded Antenna. No antenna other than that furnished by the responsible party shall be used with the device.

2.2 DESCRIPTION OF TEST MODES

For conducted test items and radiated spurious emissions
Each of these EUT operation mode(s) or test configuration mode(s) mentioned below was evaluated respectively..

Pretest Mode	Description	Data/Modulation
Mode 1	TX CH01	1 MHz/OOK

Note:
(1) All above mode have been measurement, only worst data was reported.
(2) New Battery is used during all test.

2.3 BLOCK DIGRAM SHOWING THE CONFIGURATION OF SYSTEM TESTED

During testing channel & power controlling software provided by the customer was used to control the operating channel as well as the output power level. The RF output power selection is for the setting of RF output power expected by the customer and is going to be fixed on the firmware of the final end product power parameters

Radiated Spurious Emission Test

E-1
EUT

2.4 DESCRIPTION OF SUPPORT UNITS

The EUT has been tested as an independent unit together with other necessary accessories or support units. The following support units or accessories were used to form a representative test configuration during the tests.

Item	Equipment	Mfr/Brand	Model/Type No.	Serial No.	Note
E-1	WL Flood Detector 915 MHz	RISCO	RWT6F	N/A	EUT

Item	Shielded Type	Ferrite Core	Length	Note

Note:

(1) The support equipment was authorized by Declaration of Confirmation.

(2) For detachable type I/O cable should be specified the length in cm in 『Length』 column.

2.5 EQUIPMENTS LIST FOR ALL TEST ITEMS

Radiation Test equipment

Kind of Equipment	Manufacturer	Type No.	Serial No.	Last calibration	Calibrated until
Spectrum Analyzer	Agilent	E4407B	MY50140340	2015.10.25	2016.10.24
Test Receiver	R&S	ESCI	101427	2015.10.25	2016.10.24
Bilog Antenna	TESEQ	CBL6111D	34678	2015.11.25	2016.11.24
Horn Antenna	Schwarzbeck	BBHA 9120D(1201)	9120D-1343	2016.03.06	2017.03.05
50Ω Coaxial Switch	Anritsu	MP59B	6200264416	2016.03.06	2017.03.05
PreAmplifier	Agilent	8449B	60538	2015.10.25	2016.10.24
Loop Antenna	ARA	PLA-1030/B	1029	2016.03.06	2017.03.05
USB RF power sensor	DARE	RPR3006W	15I00041SNO03	2015.10.25	2016.10.24

Conduction Test equipment

Kind of Equipment	Manufacturer	Type No.	Serial No.	Last calibration	Calibrated until
EMI Test Receiver	R&S	ESPI	102086	2015.11.20	2016.11.19
LISN	R&S	ENV216	101242	2015.10.25	2016.10.24
LISN	EMCO	3810/2NM	000-23625	2015.10.25	2016.10.24

3. EMC EMISSION TEST

3.1 CONDUCTED EMISSION MEASUREMENT

3.1.1 POWER LINE CONDUCTED EMISSION LIMITS

Operating frequency band. In case the emission fall within the restricted band specified on Part 15.207(a) limit in the table below has to be followed.

FREQUENCY (MHz)	Class B (dBuV)		Standard
	Quasi-peak	Average	
0.15 -0.5	66 - 56 *	56 - 46 *	CISPR
0.50 -5.0	56.00	46.00	CISPR
5.0 -30.0	60.00	50.00	CISPR

0.15 -0.5	66 - 56 *	56 - 46 *	FCC
0.50 -5.0	56.00	46.00	FCC
5.0 -30.0	60.00	50.00	FCC

Note:

(1) The tighter limit applies at the band edges.

(2) The limit of " * " marked band means the limitation decreases linearly with the logarithm of the frequency in the range.

The following table is the setting of the receiver

Receiver Parameters	Setting
Attenuation	10 dB
Start Frequency	0.15 MHz
Stop Frequency	30 MHz
IF Bandwidth	9 kHz

3.1.2 TEST PROCEDURE

a. The EUT was placed 0.4 meters from the horizontal ground plane with EUT being connected to the power mains through a line impedance stabilization network (LISN). All other support equipments powered from additional LISN(s). The LISN provide 50 Ohm/ 50uH of coupling impedance for the measuring instrument.
b. Interconnecting cables that hang closer than 40 cm to the ground plane shall be folded back and forth in the center forming a bundle 30 to 40 cm long.
c. I/O cables that are not connected to a peripheral shall be bundled in the center. The end of the cable may be terminated, if required, using the correct terminating impedance. The overall length shall not exceed 1 m.
d. LISN at least 80 cm from nearest part of EUT chassis.
e. For the actual test configuration, please refer to the related Item –EUT Test Photos.

3.1.3 TEST SETUP

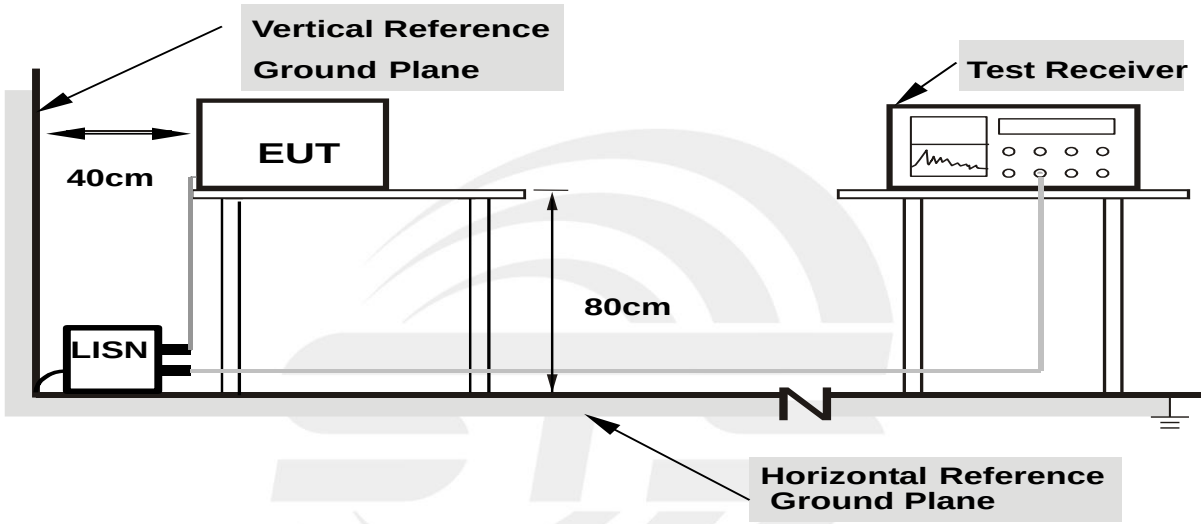

Note: 1.Support units were connected to second LISN.
2.Both of LISNs (AMN) are 80 cm from EUT and at least 80 from other units and other metal planes

3.1.4 EUT OPERATING CONDITIONS

The EUT was configured for testing in a typical fashion (as a customer would normally use it). The EUT has been programmed to continuously transmit during test. This operating condition was tested and used to collect the included data.

3.1.5 TEST RESULTS

Temperature:	26 ℃	Relative Humidity:	54%
Pressure:	1010hPa	Phase:	L/N
Test Voltage:	N/A	Test Mode:	N/A

Do not apply

3.2 RADIATED EMISSION MEASUREMENT

3.2.1 RADIATED EMISSION LIMITS

20dBc in any 100 kHz bandwidth outside the operating frequency band. In case the emission fall within the restricted band specified on Part 15.205(a), then the Part 15.209(a)and Part 15.231(b) limit in the table below has to be followed.

LIMITS OF RADIATED EMISSION MEASUREMENT (0.009MHz - 1000MHz)

Frequencies (MHz)	Field Strength (micorvolts/meter)	Measurement Distance (meters)
0.009~0.490	2400/F(KHz)	300
0.490~1.705	24000/F(KHz)	30
1.705~30.0	30	30
30~40.66	100	3
40.70~70	100	3

LIMITS OF RADIATED EMISSION MEASUREMENT (FCC 15.249)

Frequency of Emission (MHz)	**Field Strength of fundamental ((millivolts /meter)**	**Field Strength of Harmonics (microvolts/meter)**
2400 - 2483.5	50	500

Notes:

(1) Emissions radiated outside of the specified frequency bands, except for harmonics, shall be attenuated by at least 50 dB below the level of the fundamental or to the general radiated emission limits in Section 15.209, whichever is the lesser attenuation.

Spectrum Parameter	Setting
Detector	Peak
Attenuation	Auto
Start Frequency	1000 MHz
Stop Frequency	10th carrier harmonic
RB / VB (emission in restricted band)	1 MHz / 3 MHz

Receiver Parameter	**Setting**
Attenuation	Auto
Start ~ Stop Frequency	9kHz~150kHz / RB 200Hz for QP
	150kHz~30MHz / RB 9kHz for QP
	30MHz~1000MHz / RB 100kHz for PK
	Above 1GHz / RB 1MHz VB 1M for PK

3.2.2 TEST PROCEDURE

a. The measuring distance of at 3 m shall be used for measurements at frequency up to 1GHz. For frequencies above 1GHz, any suitable measuring distance may be used.
b. The EUT was placed on the top of a rotating table 0.8 meters above the ground at a 3 meter open area test site. The table was rotated 360 degrees to determine the position of the highest radiation.
c. The height of the equipment or of the substitution antenna shall be 0.8 m; the height of the test antenna shall vary between 1 m to 4 m. Both horizontal and vertical polarizations of the antenna are set to make the measurement.
d. The initial step in collecting conducted emission data is a spectrum analyzer peak detector mode pre-scanning the measurement frequency range. Significant peaks are then marked and then Quasi Peak detector mode re-measured.
e. If the Peak Mode measured value compliance with and lower than Quasi Peak Mode Limit,
f. For the actual test configuration, please refer to the related Item –EUT Test Photos.

Note:

Both horizontal and vertical antenna polarities were tested
and performed pretest to three orthogonal axis. The worst case emissions were reported

3.2.3 DEVIATION FROM TEST STANDARD

No deviation

3.2.4 TEST SETUP

（A）Radiated Emission Test-Up Frequency Below 30MHz

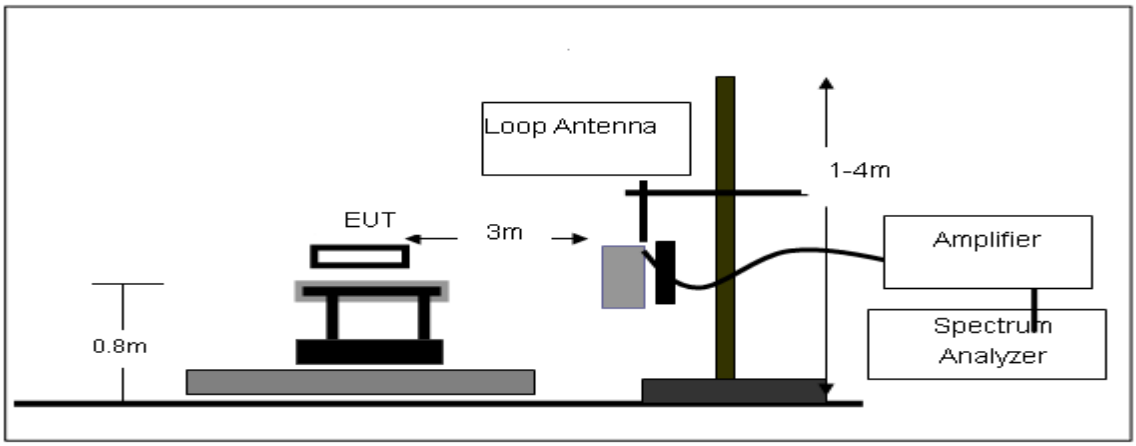

（B）Radiated Emission Test-Up Frequency 30MHz~1GHz

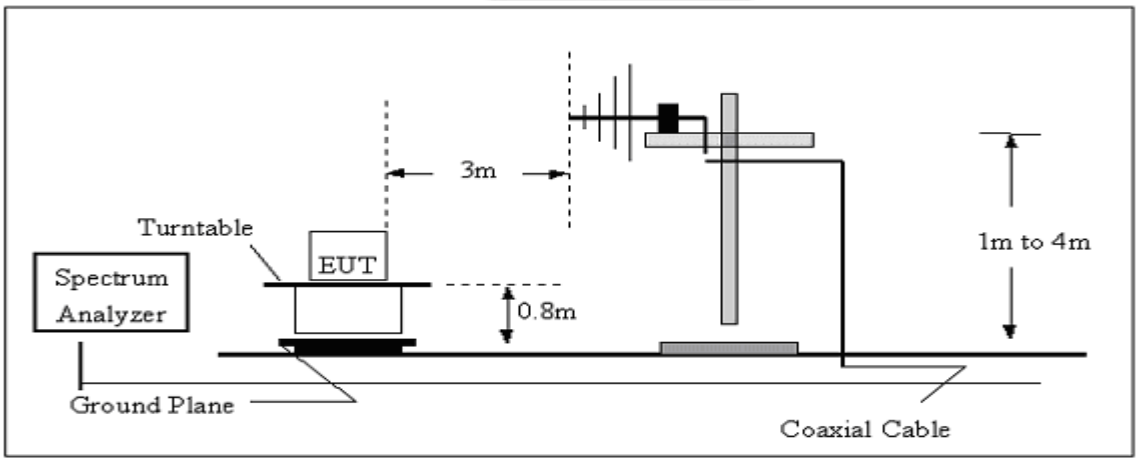

（C）Radiated Emission Test-Up Frequency Above 1GHz

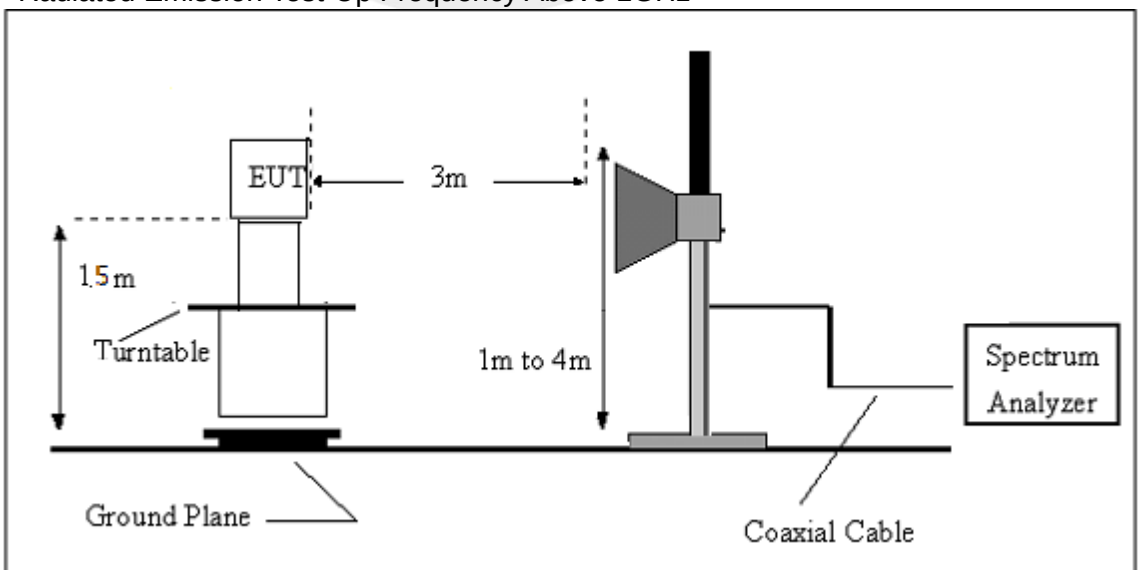

3.2.5 EUT OPERATING CONDITIONS

The EUT tested system was configured as the statements of 2.4 Unless otherwise a special operating condition is specified in the follows during the testing.

Below 30 MHz

Temperature :	23 ℃	Relative Humidity :	50%
Pressure :	1010 hPa	Polarization :	---
Test Voltage :	DC 3V		
Test Mode :	TX Mode		

Freq.	Reading	Limit	Margin	State
(MHz)	(dBuV/m)	(dBuV/m)	(dB)	P/F
--	--	--	--	PASS
--	--	--	--	PASS

NOTE:

The amplitude of spurious emissions which are attenuated by more than 20dB below the permissible value has no need to be reported.

Distance extrapolation factor =40 log (specific distance/test distance)(dB);

Limit line = specific limits(dBuv) + distance extrapolation factor.

Between 30MHz – 1000 MHz Radiation Spurious

Temperature:	26 ℃	Relative Humidity:	54%
Pressure:	1010hPa	Phase:	Horizontal
Test Voltage:	DC 3V	Test Mode:	Model 1 worst
Frequence:	915MHz		

Frequency (MHz)	Result (dBuV/m)	Limit (dBuV/m)	Margin (dB)	Remark
37.26	22.39	40.0	−17.61	QP
46.93	20.43	40.0	−19.57	QP
267.06	21.90	46.0	−24.10	QP
126.76	20.52	43.5	−22.98	QP
484.76	28.18	46.0	−17.82	QP
902.00	33.73	46.0	-12.27	QP
915.00	79.02	94.0	-14.98	PK
928.00	37.24	46.0	-8.76	QP

Remark:
1. All readings are Quasi-Peak and Average values.
2. Margin = Result–Limit

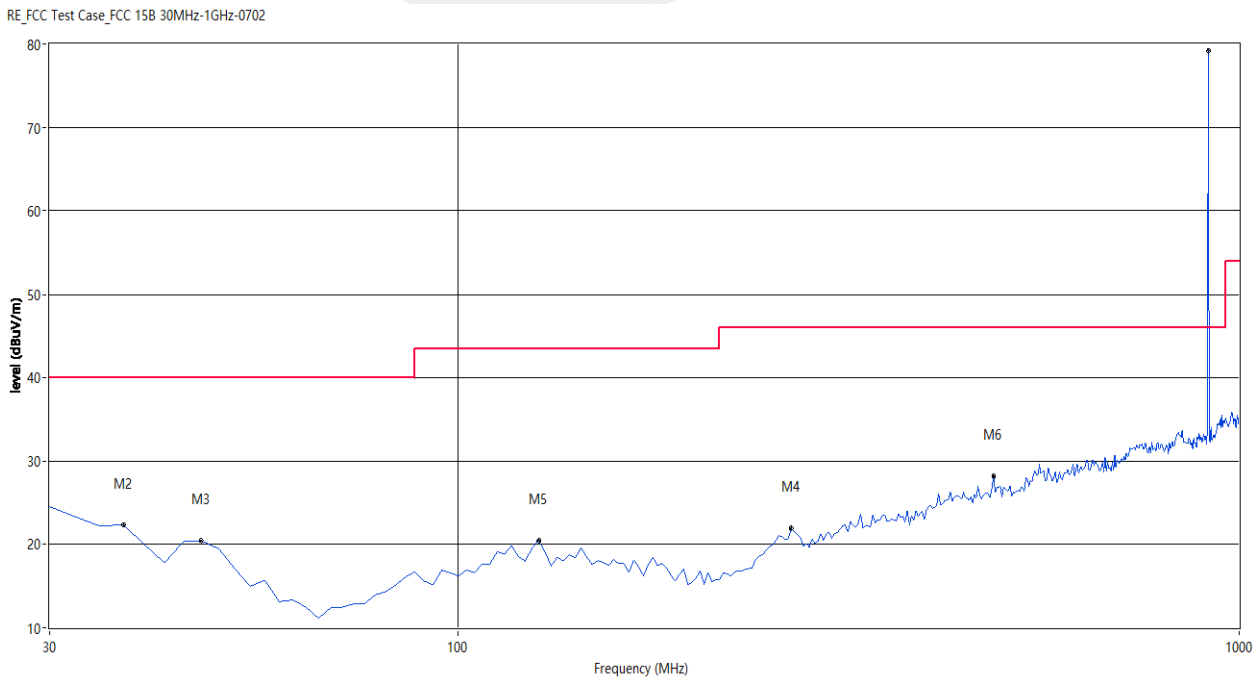

Temperature:	26 ℃	Relative Humidity:	54%
Pressure:	1010hPa	Phase:	Vertical
Test Voltage:	DC 3V	Test Mode:	Model 1 worst
Frequence:	915MHz		

Frequency (MHz)	Result (dBuV/m)	Limit (dBuV/m)	Margin (dB)	Remark
126.76	27.26	43.5	−16.24	QP
264.64	23.02	46.0	−22.98	QP
51.77	16.88	40.0	−23.12	QP
383.17	25.39	46.0	−20.61	QP
567.01	30.35	46.0	−15.65	QP
902.00	34.42	46.0	-11.58	QP
915.00	84.25	94.0	−9.75	PK
928.00	37.33	46.0	-8.67	QP

Remark:
1. All readings are Quasi-Peak and Average values.
2. Margin = Result–Limit

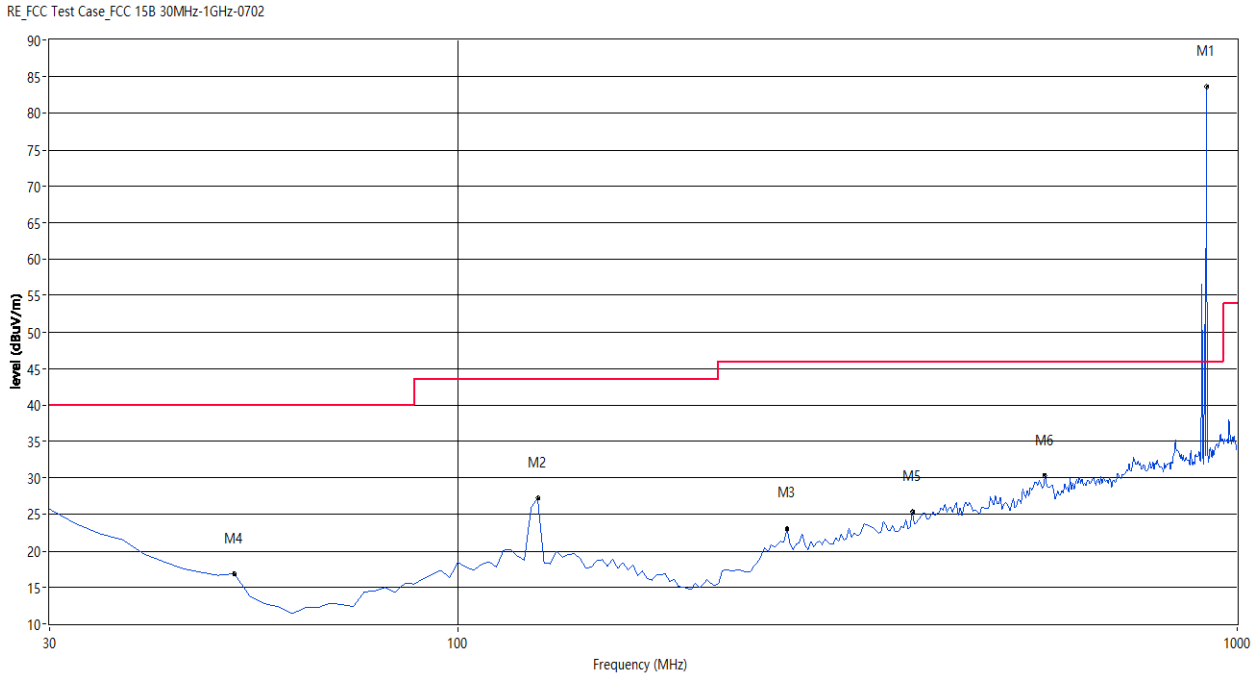

Above 1G Radiation Spurious

Frequency (MHz)	Meter Reading (dBμV)	Factor (dB)	Emission Level (dBμV/m)	Limits (dBμV/m)	Margin (dB)	Detector Type	Comment
915MHz							
1100.23	68.45	-18.30	50.15	74	-23.85	PK	Vertical
1100.23	56.49	-18.30	38.19	54	-15.81	AV	Vertical
1100.54	68.39	-18.30	50.09	74	-23.91	PK	Horizontal
1100.54	56.48	-18.30	38.18	54	-15.82	AV	Horizontal
1517.21	66.23	-15.70	50.53	74	-23.47	PK	Vertical
1517.21	54.24	-15.70	38.54	54	-15.46	AV	Vertical
1517.36	66.28	-15.70	50.58	74	-23.42	PK	Horizontal
1517.36	54.22	-15.70	38.52	54	-15.48	AV	Horizontal
1830.84	84.68	-13.8	70.88	74	-3.12	PK	Vertical
1830.84	59.57	-13.8	45.77	54	-8.23	AV	Vertical
1830.24	85.65	-13.8	71.85	74	-2.15	PK	Horizontal
1830.24	60.48	-13.8	46.68	54	-7.32	AV	Horizontal
2145.21	63.50	-12.50	51.00	74	-23.00	PK	Vertical
2145.21	51.50	-12.50	39.00	54	-15.00	AV	Vertical
2145.35	63.45	-12.50	50.95	74	-23.05	PK	Horizontal
2145.35	51.51	-12.50	39.01	54	-14.99	AV	Horizontal
2745.26	72.55	-10.60	61.95	74	-12.05	PK	Vertical
2745.26	57.63	-10.60	47.03	54	-6.97	AV	Vertical
2745.28	72.84	-10.60	62.24	74	-11.76	PK	Horizontal
2745.28	57.29	-10.60	46.69	54	-7.31	AV	Horizontal
3265.32	63.55	-9.80	53.75	74	-20.25	PK	Vertical
3265.32	51.59	-9.80	41.79	54	-12.21	AV	Vertical
3265.29	63.52	-9.80	53.72	74	-20.28	PK	Horizontal
3265.29	51.51	-9.80	41.71	54	-12.29	AV	Horizontal
4000.28	68.43	-6.60	61.83	74	-12.17	PK	Vertical
4000.28	50.39	-6.60	43.79	54	-10.21	AV	Vertical
4000.27	68.39	-6.60	61.79	74	-12.21	PK	Horizontal
4000.27	50.25	-6.60	43.65	54	-10.35	AV	Horizontal
7236.36	58.15	3.40	61.55	74	-12.45	PK	Vertical
7236.36	41.17	3.40	44.57	54	-9.43	AV	Vertical

7236.40	58.27	3.40	61.67	74	-12.33	PK	Horizontal
7236.40	41.17	3.40	44.57	54	-9.43	AV	Horizontal
8124.49	56.31	4.80	61.11	74	-12.89	PK	Vertical
8124.49	40.30	4.80	45.10	54	-8.90	AV	Vertical
8124.48	56.24	4.80	61.04	74	-12.96	PK	Horizontal
8124.48	40.16	4.80	44.96	54	-9.04	AV	Horizontal
9105.18	57.17	5.00	62.17	74	-11.83	PK	Vertical
9105.18	40.06	5.00	45.06	54	-8.94	AV	Vertical
9105.20	57.33	5.00	62.33	74	-11.67	PK	Horizontal
9105.20	40.26	5.00	45.26	54	-8.74	AV	Horizontal
11036.43	53.03	10.20	63.23	74	-10.77	PK	Vertical
11036.43	36.16	10.20	46.36	54	-7.64	AV	Vertical
11036.44	53.12	10.20	63.32	74	-10.68	PK	Horizontal
11036.44	36.14	10.20	46.34	54	-7.66	AV	Horizontal

4. BANDWIDTH TEST

4.1 TEST PROCEDURE

a. The EUT was directly connected to the spectrum analyzer and antenna output port as show in the block diagram below,

b. Spectrum Setting : RBW= 100KHz, VBW≧RBW, Sweep time = Auto.

4.2 TEST SETUP

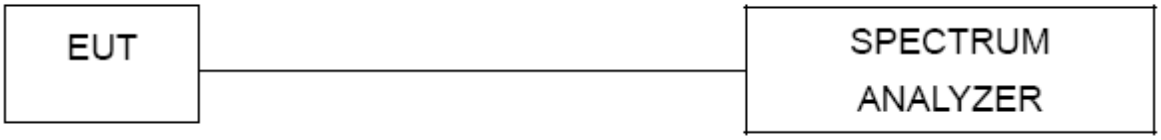

4.3 EUT OPERATION CONDITIONS

TX mode.

4.4 TEST RESULTS

Temperature：	25 ℃	Relative Humidity：	50%
Pressure：	1012 hPa	Test Voltage ：	DC 3V
Frequence:	915MHz		

Test Channel	Frequency (MHz)	20 dB Bandwidth (MHz)	99% Bandwidth (MHz)
CH01	915MHz	0.359	0.326

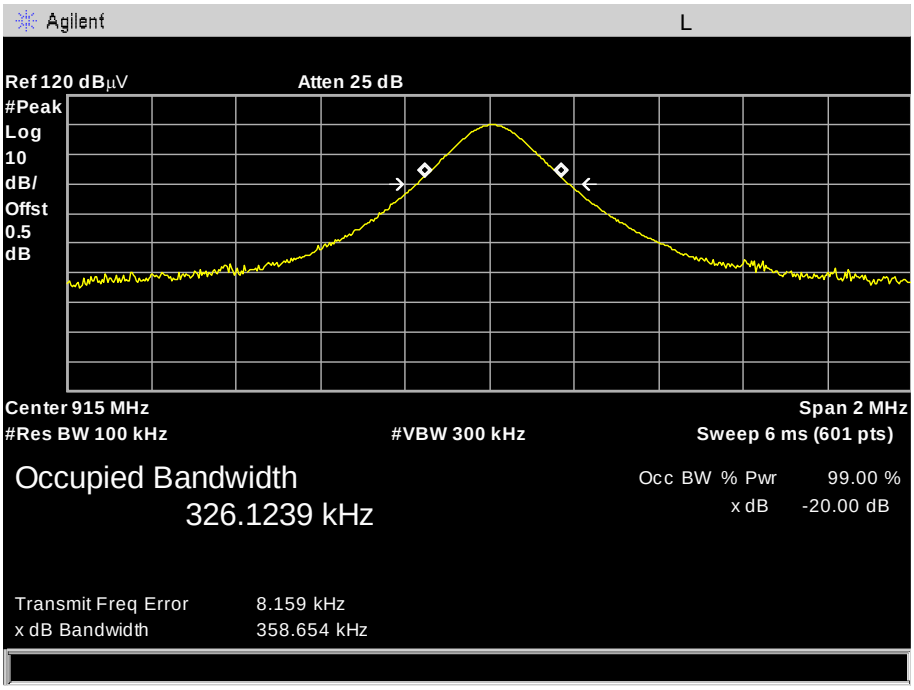

5. ANTENNA REQUIREMENT

5.1 STANDARD REQUIREMENT

According to the FCC Part 15 Paragraph 15.203, an intentional radiator shall be designed to ensure that no antenna other than that furnished by the responsible party shall be used with the device. The use of a permanently attached antenna to the intentional radiator shall be considered sufficient to comply with the provisions of this section. This product use a permanent ceramic printed antenna, fulfill the requirement of this section

5.2 EUT ANTENNA

The EUT antenna is Spring Antenna.It conforms to the standard requirements.

APPENDIX I- PHOTOS OF TEST SETUP

Radiated Measurement Photos

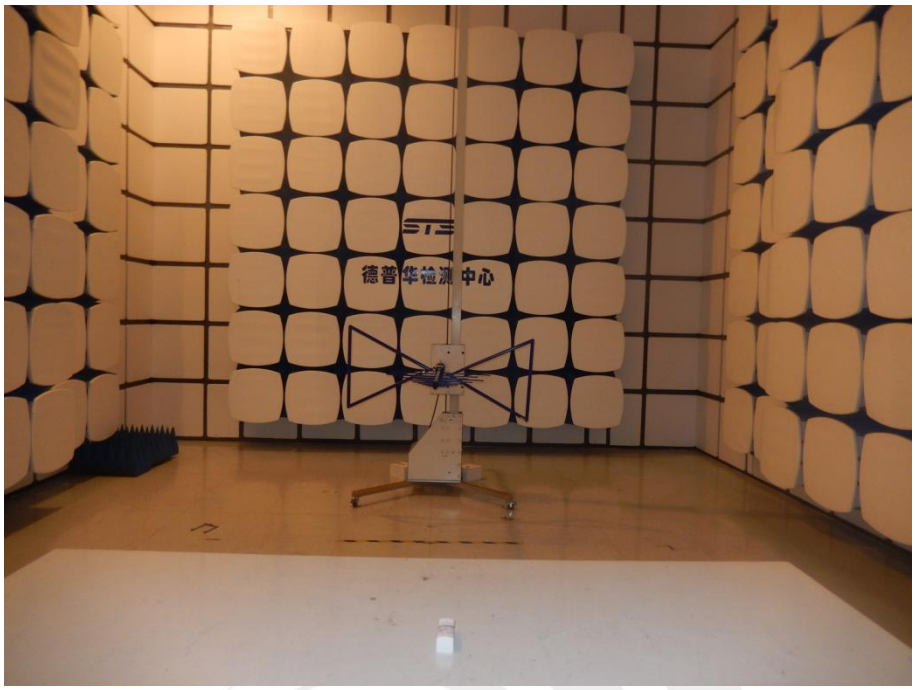

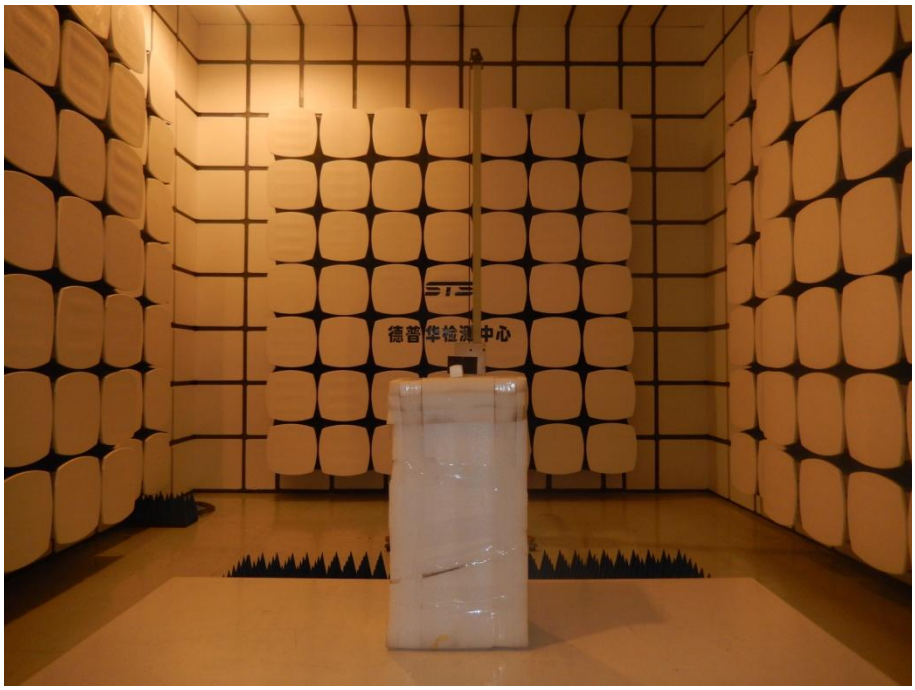

※※※※※END OF THE REPORT※※※※※