EXHIBIT D

Circuit Diagram

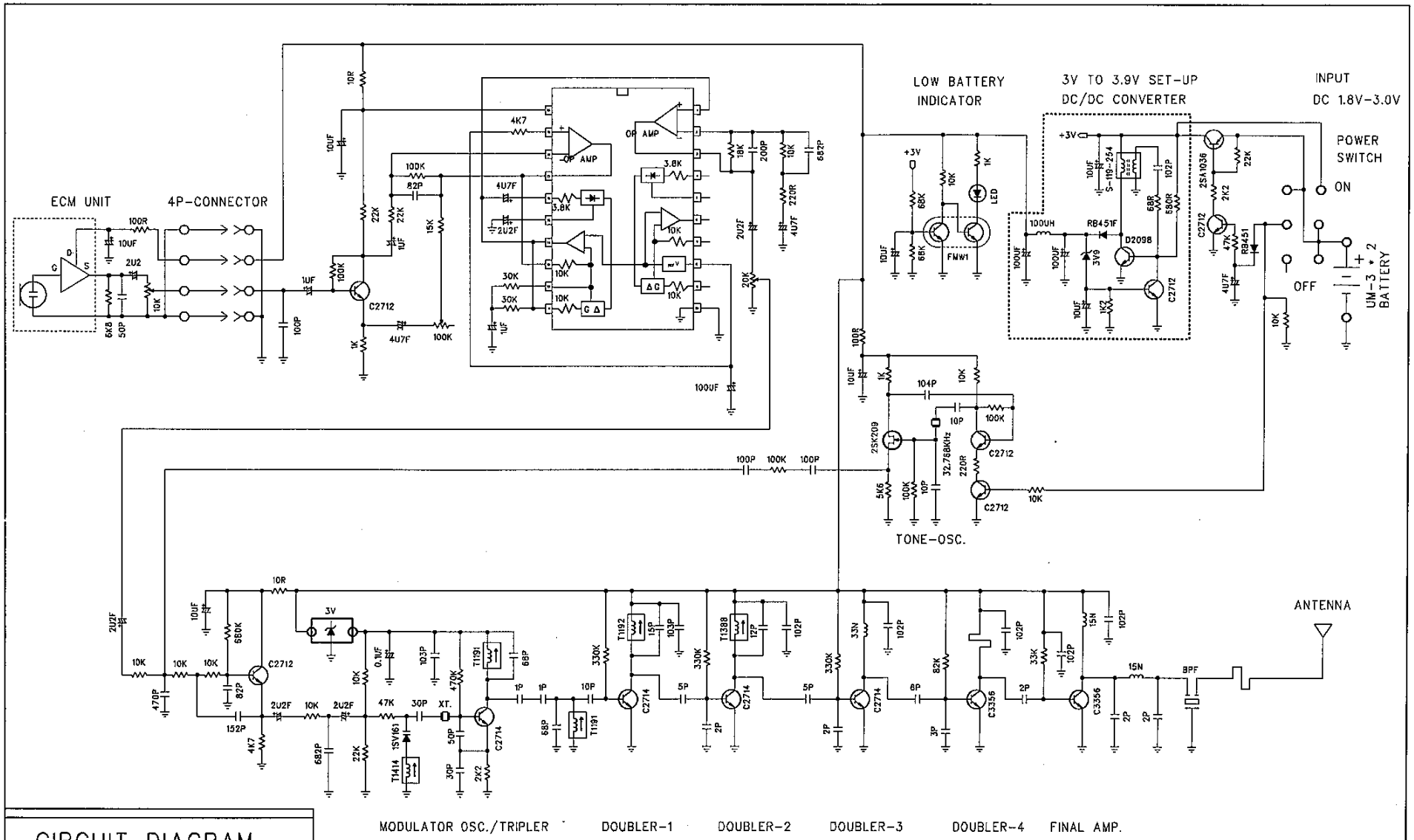

CIRCUIT DIAGRAM

UHF BAND

WIRELESS MICROPHONE

MODEL : MX – UF1

WA-GOL INDUSTRIAL CO., LTD.	DESIGN BY:	DRAWING BY:	VER:	DATE: MAR 26 1999	SHEET: A