UHF

MASCOT

USER'S MANUAL

WIRELESS MICROPHONE SYSTEM

RS-21B / RS-22B

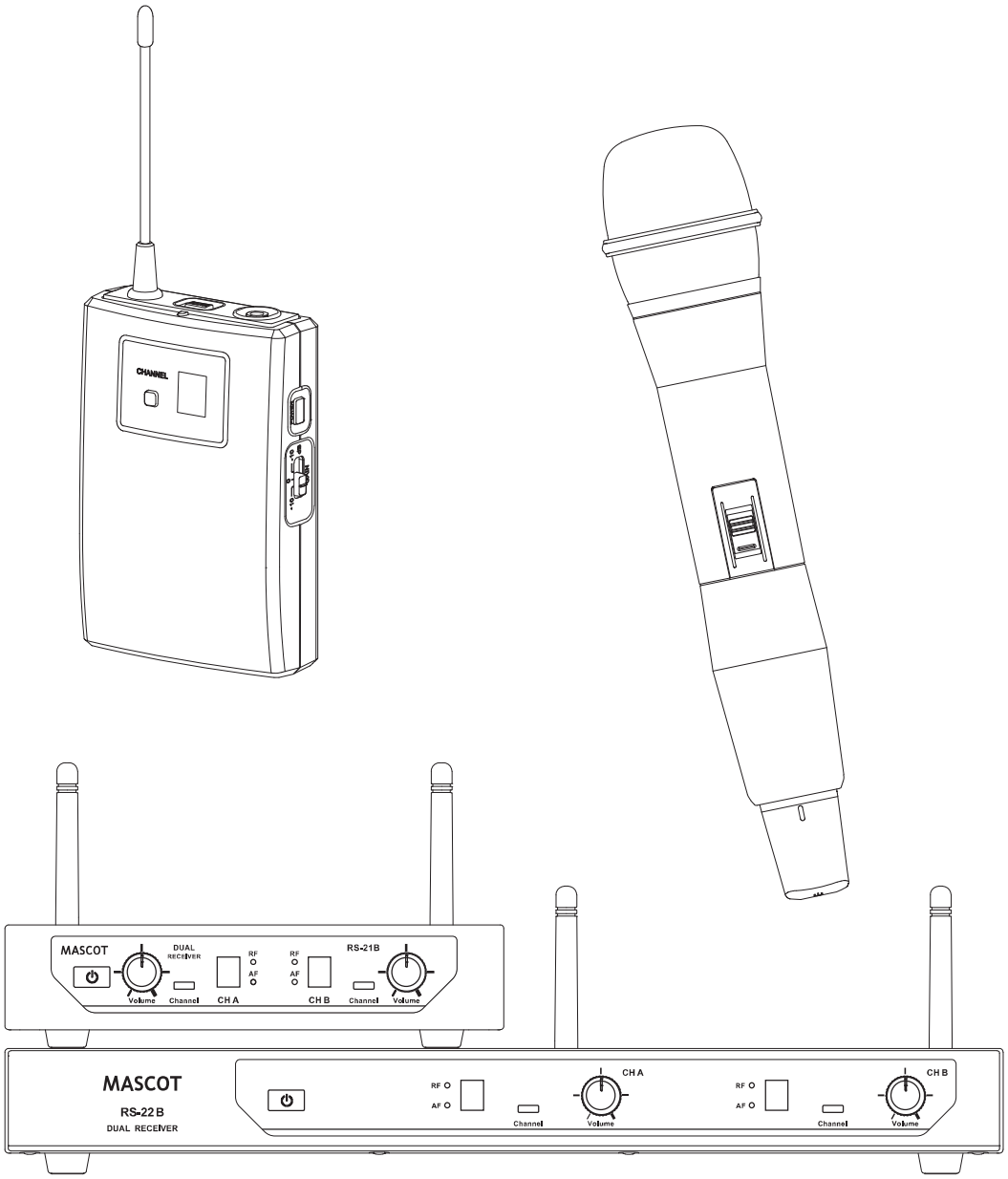

Contents:

Introduction ---------- 1

Quick Start Guide ---------- 2

Product Description ---------- 4

System Operation ---------- 8

Color Label Identification ---------- 10

Basic Connections ---------- 11

Trouble Shooting ---------- 12

Specification ---------- 13

Introduction

Thank you for purchasing our product. This PLL synthesized wireless microphone system operates in UHF band frequency with 8 selectable channels. Please read this instruction manual carefully before operating the system. This manual covers the function and operation of the wireless microphone system.

FCC Statement

This device complies with Part 15.236 of the FCC Rules. Operation is subject to the following two conditions: (1)This device may not cause harmful interference and (2) This device must accept any interference received, including interference that may cause undesired operation.

Notice : The changes or modifications not expressly approved by the party responsible for compliance could void the user's authority to operate the equipment.

IMPORTANT NOTE: To comply with the FCC RF exposure compliance requirements, no change to the antenna or the device is permitted. Any change to the antenna or the device could result in the device exceeding the RF exposure requirements and void user's authority to operate the device.

Safety

- Do not spill liquid on the appliance and do not drop it on a hard concrete floor.
- Do not place the equipment near heat sources such as radiators, heating ducts, amplifier, etc.
- Do not expose the equipment to direct sunlight, extremely dust, excessive moisture, rain, mechanical vibrations, or shock.
- Take out the battery from transmitter, if the appliance has been not used for a longer period. This will avoid the damage resulting from a defective leaking battery.
- If the equipment is not going to be used for a long time, disconnect the AC adapter from the power outlet. Please note that if you turn the equipment off while leaving the AC adapter plugged in, it is not fully isolated from the power supply.
- WARNING: To reduce the risk of fire or electric shock, do not use the products near water and do not expose them to rain or moisture.
- No guarantee claims for the equipment and no liability for any resulting personal damage or material damage will be accepted if the equipment is used for other purpose than originally intended, if the equipment is not correctly connected or operated, or if the equipment is not repaired in an expert way.

Environment

- Do not throw used batteries into a fire or garbage bin with domestic rubbish. Be sure to dispose of used batteries in accordance with local waste disposal rules.
- When disposing the equipment, remove the batteries, separate the case, circuit boards, and cables, and dispose of all components in accordance with local waste disposal rules.

Quick Start Guide

1. Connected Receiver Power Cable

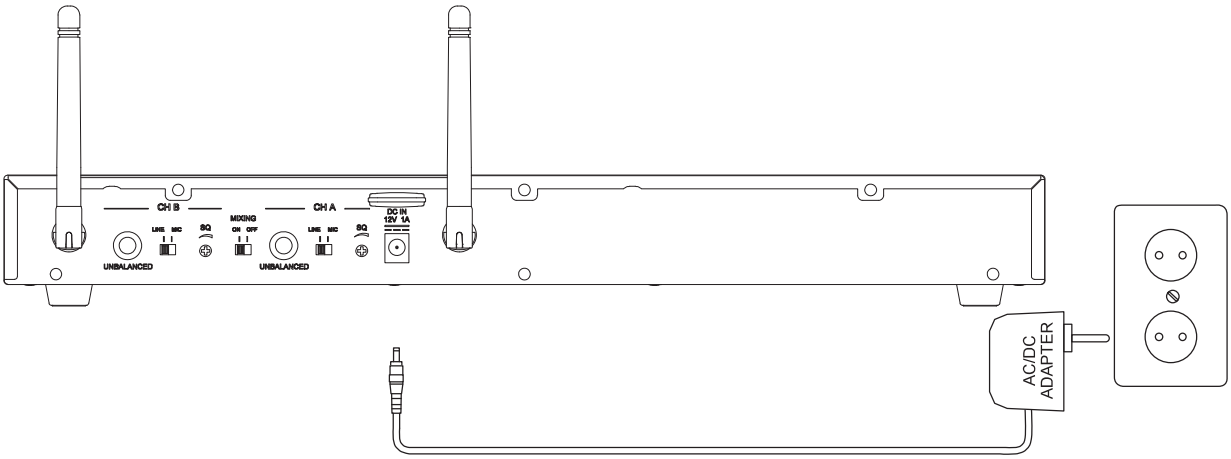

2. Connect Mixer or Amplifier

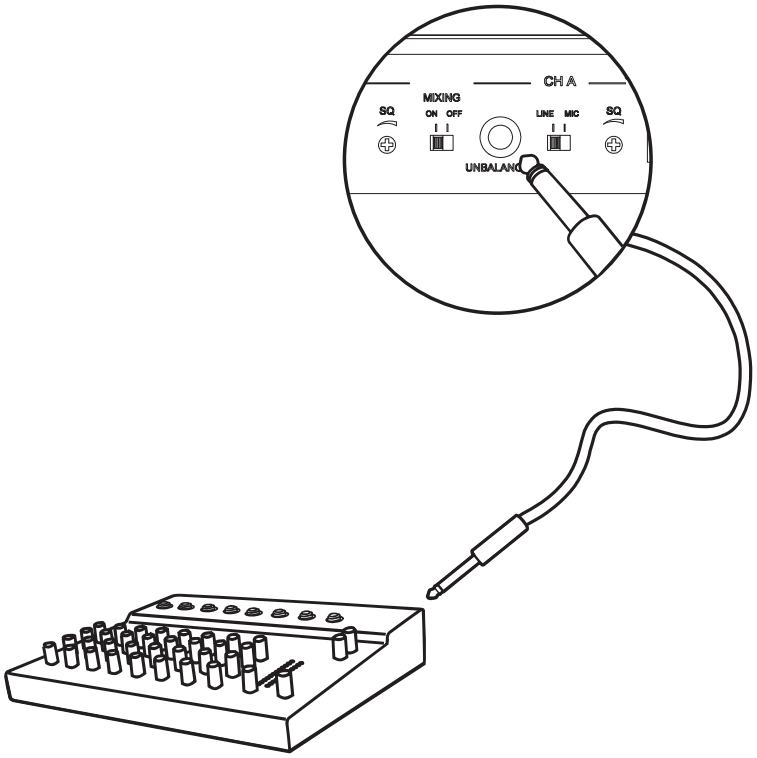

Quick Start Guide

3. Insert Batteries

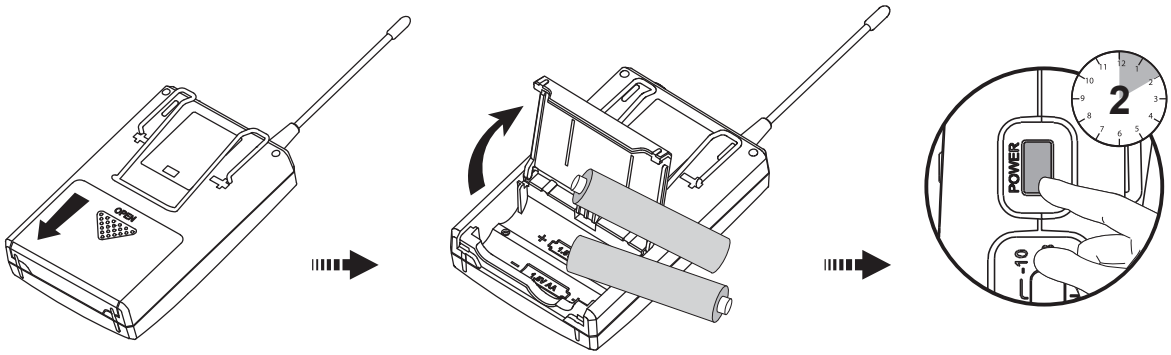

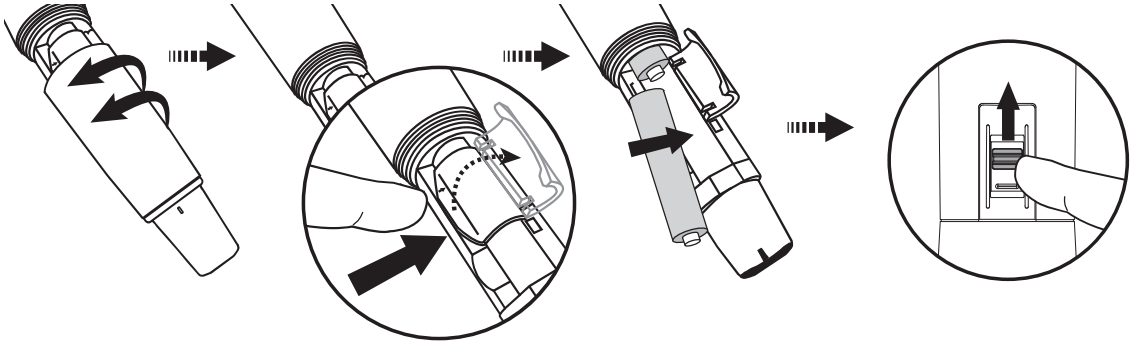

4. Select channel

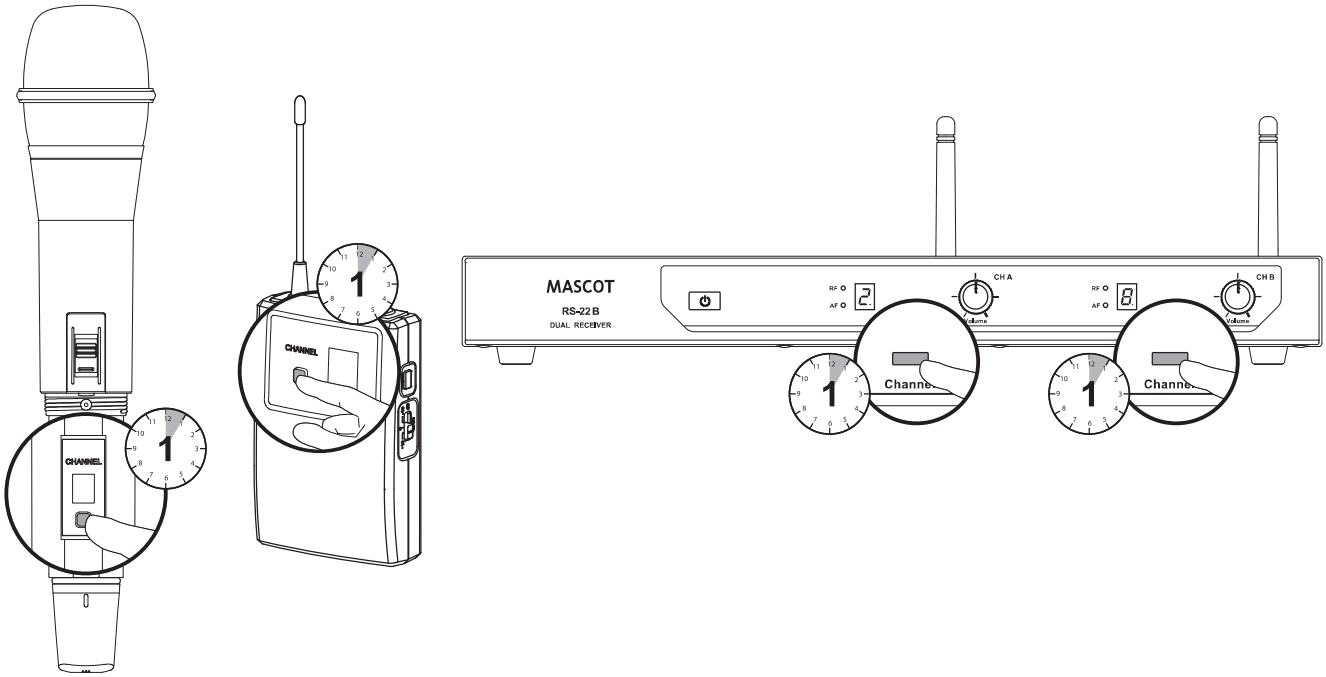

- **Receiver**

Front :

RS-21B: Dual Channel Receiver

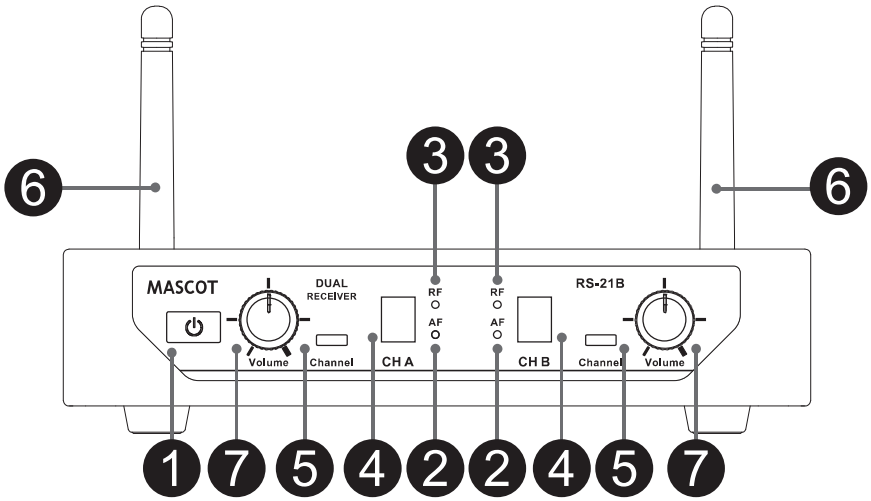

1. Power Button
2. AF Indicator: Display the reception status of AF signal.
3. RF Indicator: Display the reception status of RF signal.
4. LED Display: Display selected channel.
5. Channel Selector: Tap the channel backward.
6. Fixed UHF Antenna
7. Volume Control: Adjust the receiver output level.

Rear :

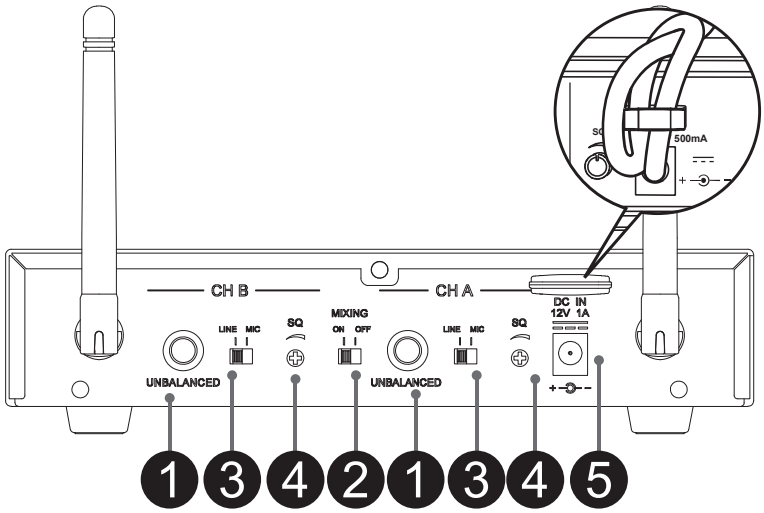

1. Unbalanced 6.35mm Audio Output
2. Mixing Output Switch: Audio to both Mix A Channel and B Channel Outputs
3. MIC/LINE Switch: Use this switch to adjust audio output level for MIC level (-20dB) or LINE level (0dB)
4. Squelch: Turn the knob to adjust or decrease the noise floor level
5. Power Adapter Connector

- **Receiver**

Front :

RS-22B: Dual Channel Receiver

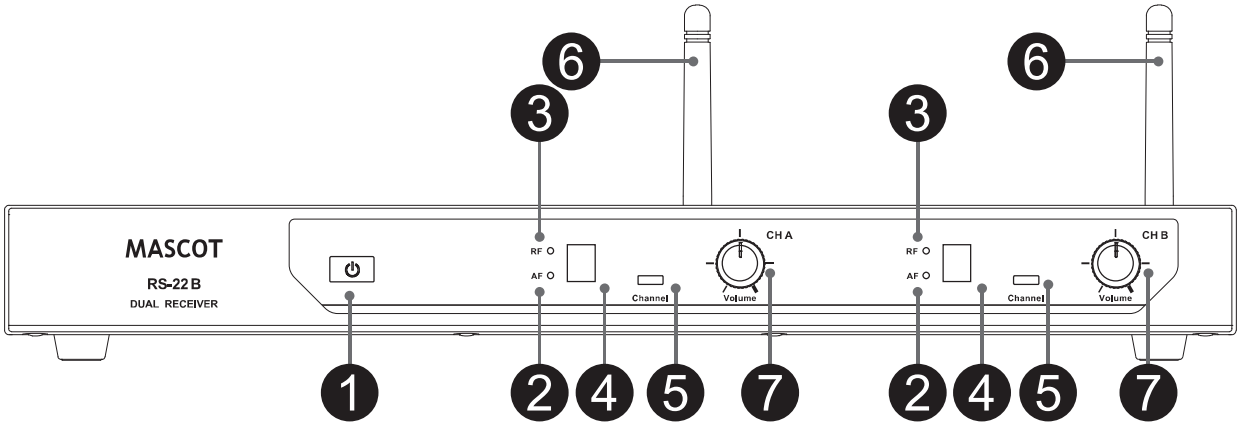

1. Power Button
2. AF Indicator: Display the reception status of AF signal.
3. RF Indicator: Display the reception status of RF signal.
4. LED Display: Display selected channel.
5. Channel Selector: Tap the channel backward.
6. Fixed UHF Antenna
7. Volume Control: Adjust the receiver output level.

Rear :

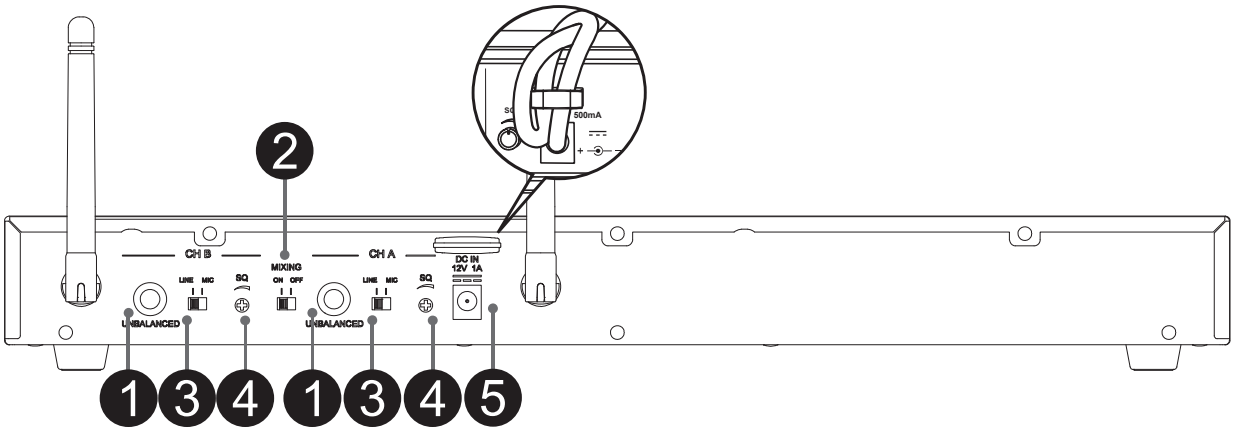

1. Unbalanced 6.35mm Audio Output
2. Mixing Output Switch: Audio to both Mix A Channel and B Channel Outputs
3. MIC/LINE Switch: Use this switch to adjust audio output level for MIC level (-20dB) or LINE level (0dB)
4. Squelch: Turn the knob to adjust or decrease the noise floor level
5. Power Adapter Connector

UF-21B Handheld Microphone

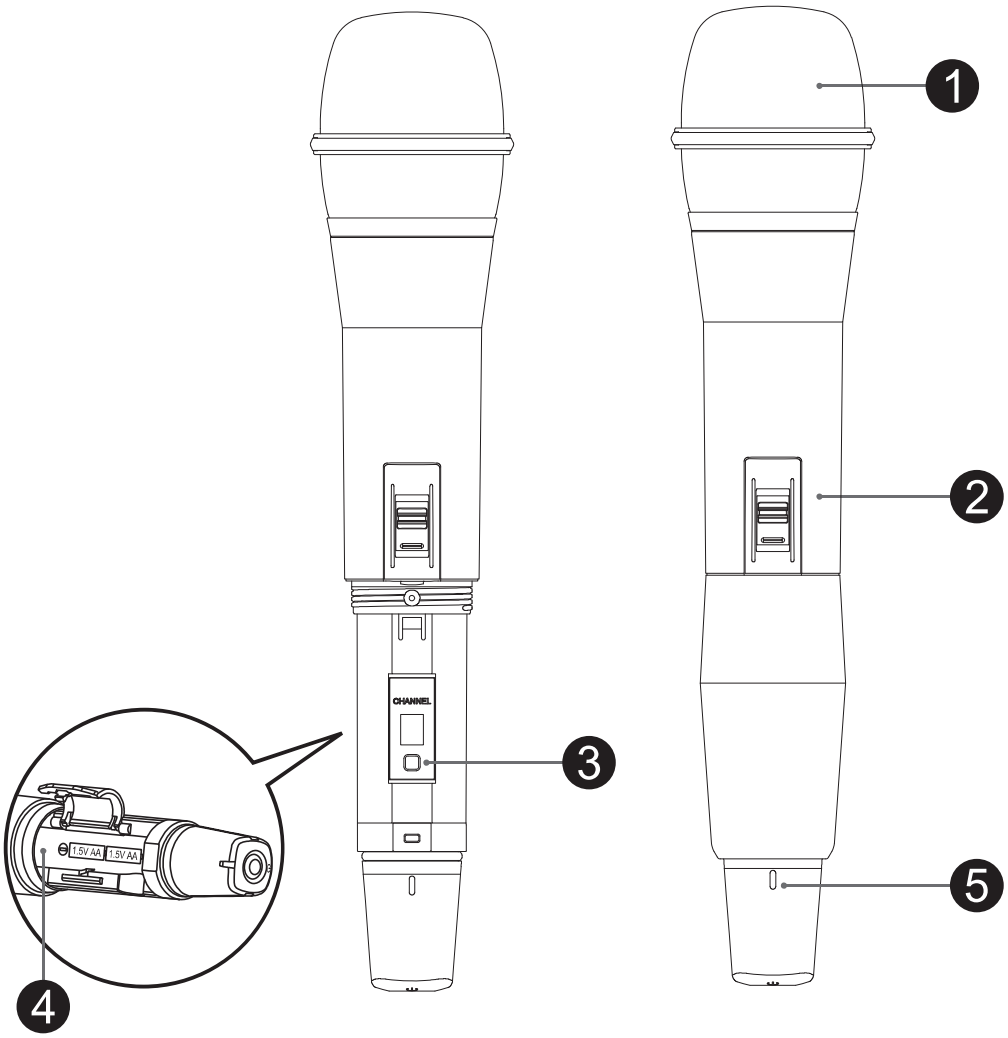

1. Grille: Protects the microphone capsule and helps reduce breath sounds and wind noise.
2. Talk Switch: Push the switch up to talk. Push the switch down for mute.
3. Channel Selector: 8 different selectable channels.
4. Battery Compartment: Insert two AA size batteries into the compartment and make sure that the polarity of batteries is correct.
5. Power LED: Indicate the power / low battery level status.

LED Indicator	Status
Green	Ready
Flashing Red	Low battery power when less than 10 minutes operation

● UT-16B Bodypack Transmitter

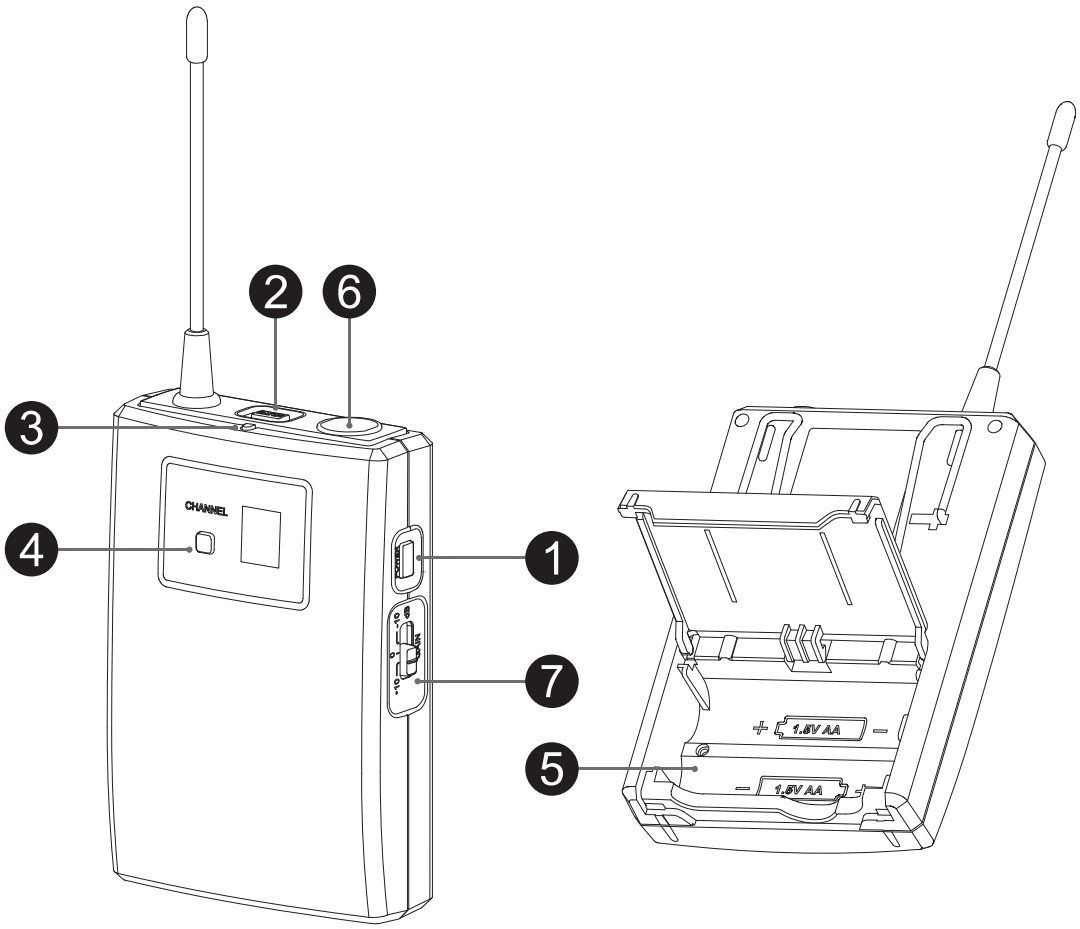

1. Power Button: Press for 2 seconds to power the microphone on or off.
2. Mute Button: With the transmitter on, a slight press for button will toggle between mute and unmute function.
3. Power LED: Indicate the power / low battery level status.

LED Indicator	Status
Green	Ready
Flashing Red	Low battery power when less than 10 minutes operation

4. Channel Selector: 8 different selectable channels.
5. Battery Compartment: Insert two AA size batteries into the compartment and make sure that the polarity of batteries is correct.
6. 3.5ø screw plug: Connect to the lavalier microphone or headset microphone.
7. Gain Switch: The switch sets the audio input to -10dB, 0dB, 10dB

Connecting the receiver

Prior to setting up, please check that the transmitter and receiver are tuned to the same frequency or channel. Two or more transmitters operating in the same frequency can not be used at the same time and area.

1

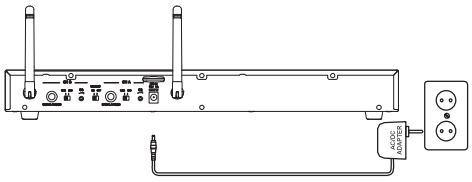

➢ Connected the provided DC power supply to the receiver power input with an appropriate AC power source. The LED display will light and the receiver is on.

2

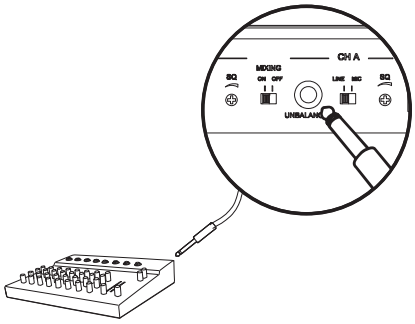

➢ Using a standard audio cable with 6.3mm phone plugs to connect the mixer or amplifier.

3

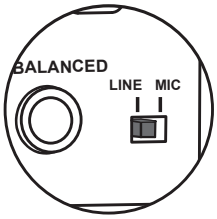

➢ Set the audio output level for
MIC: -20dB
LINE: 0dB (Default Setting)

4

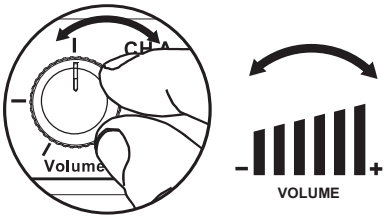

➢ Using the Volume Controller to adjust the AF audio level to the input of the amplifier or mixer.

✧ Default Setting: In minimum VOLUME position.

5

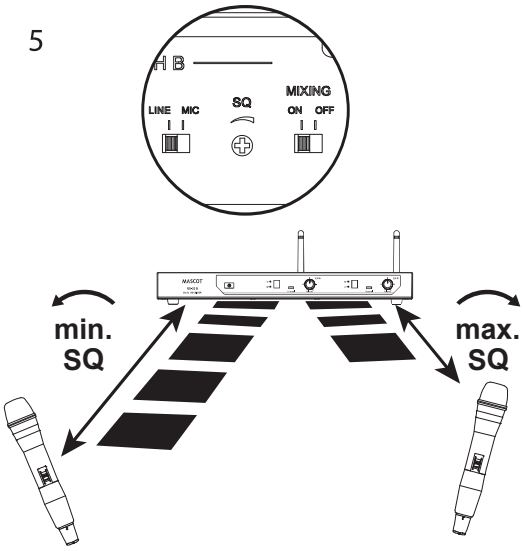

➢ Use squelch to eliminate or suppress the ambient RF noise.

✧ Defaulting Setting: In properly position.

Set up the handheld microphone / bodypack transmitter

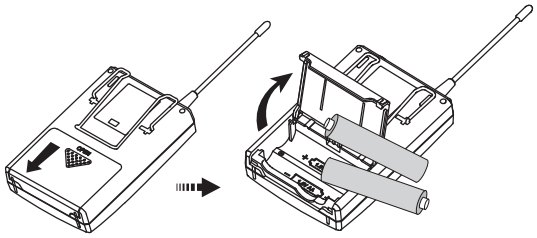

- Open the battery cover and insert batteries into the battery compartment conforming to the polarity (+)(-) marks.

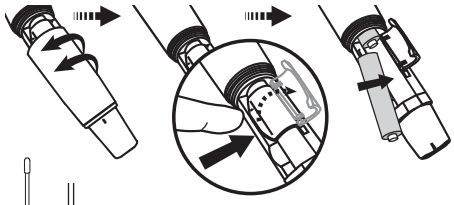

- Counterclockwise loosen the battery cover and insert two AA batteries into the compartment. Be careful to observe the correct polarity when replacing the batteries.

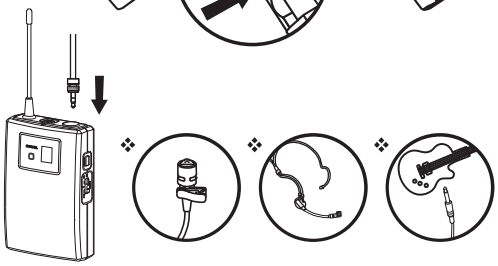

- Connect to the lavalier microphone, headset microphone or guitar cable.

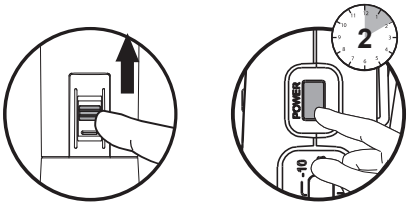

Handheld Bodypack

- Handheld microphone:
  Push the switch up to talk
- Bodypack transmitter:
  Press for 2 seconds to turn on the power

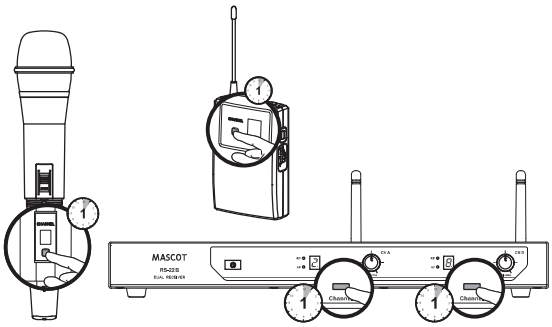

- Press Channel button on the receiver to select for the clear channel.

✧ Ensure to set up the receiver and transmitter at the same channel

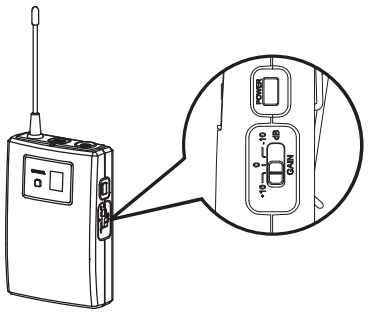

- Adjust the audio input level.
  - 10dB
  - 0dB (Default Setting)
  - -10dB

• 10dB • 0dB • -10dB

NOTE: When you don't use this device for a long term period, please switch the power switch to "off" mode to save more electric power.

Color Label Identification

You can also stick the color label on the receiver and transmitter for quickly identify the pair system.

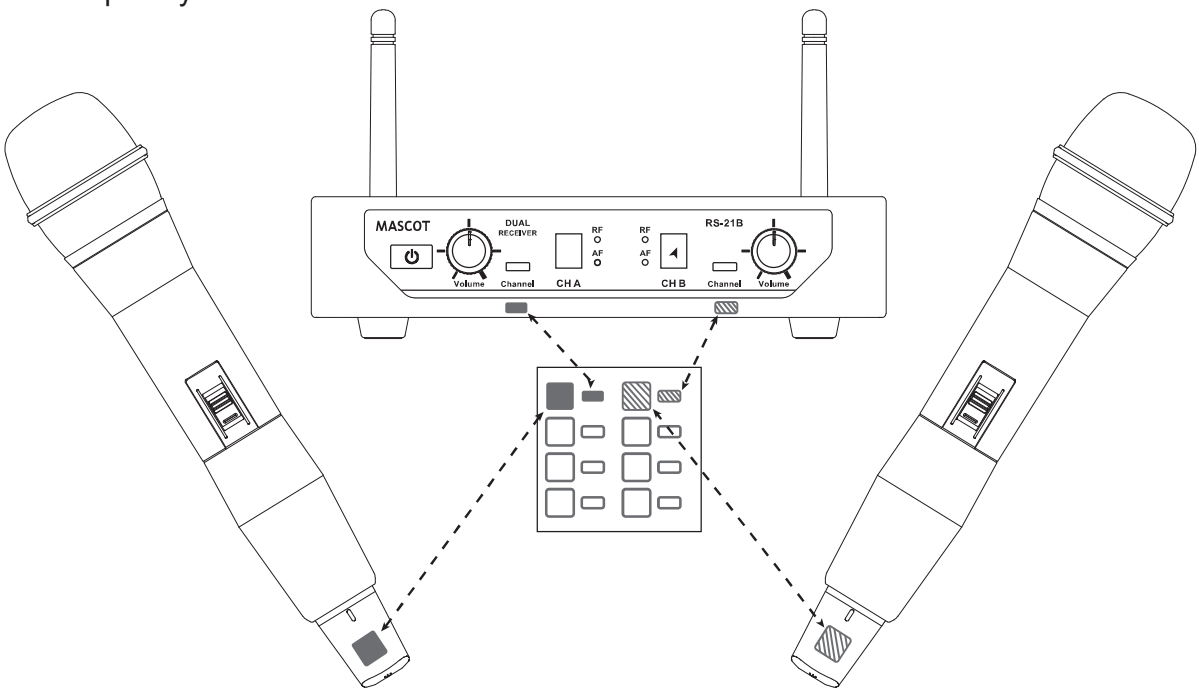

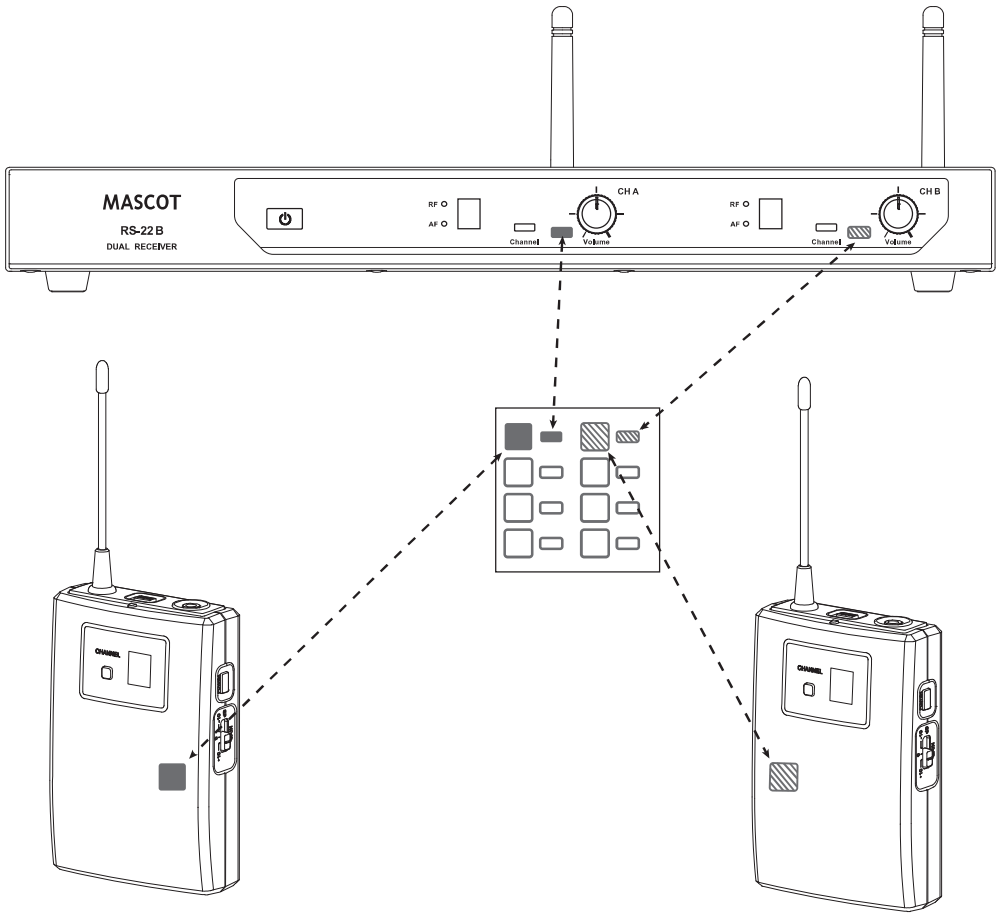

Basic Connections

To install a receiver in a 19” standard rack by using 2 short L type metal racks.

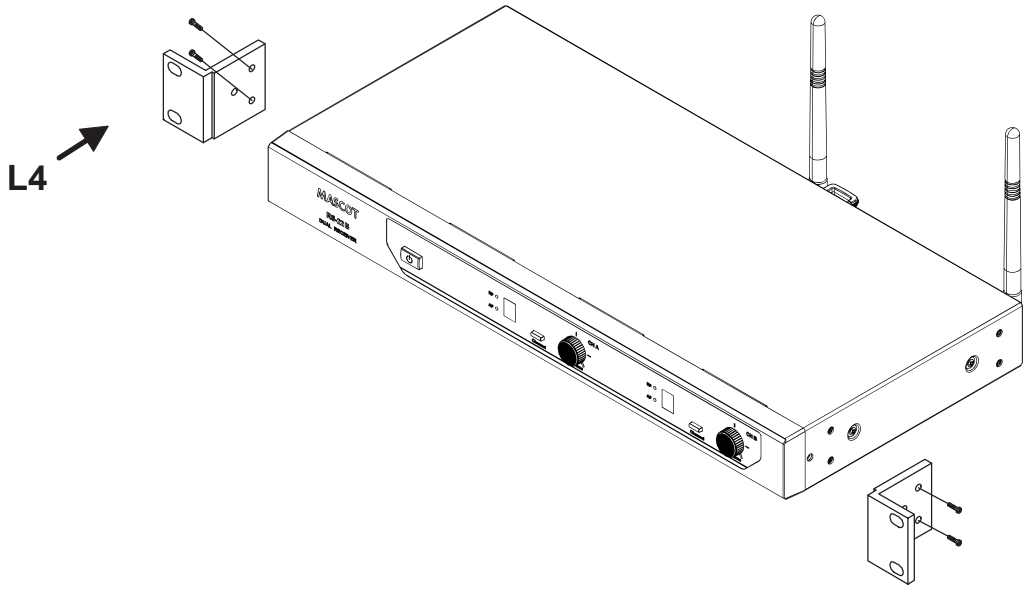

To mount a receiver in a 19” standard rack by using 2 long L type metal racks.
(L type long metal racks is an optional product, so please purchase extra in local shops.)

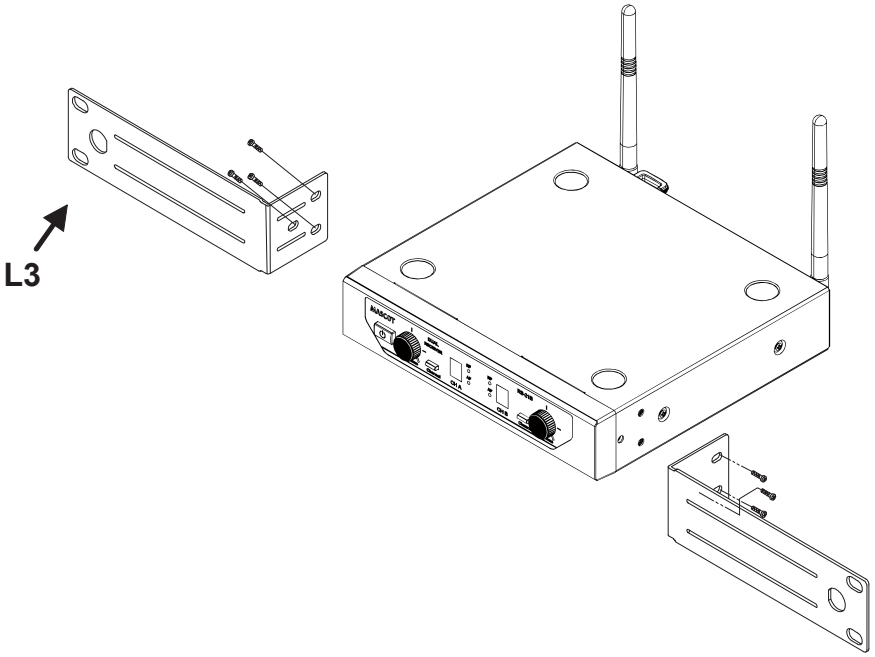

Trouble Shooting

Problem	Solution
No sound	➢ Check the power supply of the microphone and receiver. ➢ Check that the transmitter and receiver are tuned to the same frequency. ➢ Check whether the hi-fi appliance is switched on and the receiver output is connected to audio mixer or amplifier input. ➢ Check whether transmitter is too far away from receiver or SQUELCH control set too high. ➢ Check whether receiver is located too near metal object or there are obstructions between transmitter and receiver.
Sound interference	➢ Check the antenna location. ➢ When using 2 or above microphone sets simultaneously, make sure that the chosen frequencies are not interfered. ➢ Check whether the interference comes from other wireless microphones, TV, radio and etc.
Distortion	➢ Check the receiver volume level whether is set too high or too low. ➢ Check whether the interference comes from other wireless microphones, TV, radio and etc.

● System Performance

Receiver

- Frequency Range : UHF510 ~ 937.5MHz (Regionally Selected)
- Case : RS-21B : Half 19” EIA Rack Metal Case
  RS-22B : 19” EIA Rack Metal Case
- Oscillator : PLL Synthesized
- Modulation : FM
- S/N Ratio : ＞100dB, at 20KHz deviation and 60dBμV antenna input
- Image & Spurious Rejection : 70dB minimum
- Receiving Sensitivity : At 5μV over 70dB S/N ratio
- AF Response : 50Hz to 18KHz
- T.H.D. : ＜1% (at 1KHz)
- IF Frequency : 1st: 243.95MHz 2nd: 10.7MHz
- Dynamic Range : ＞100dB
- Tone Signal : 32.768KHz
- Audio Output : Unbalanced
- Power Supply : DC12V
- Current Consumption : RS-21B : 250±10mA / RS-22B : 250±10mA
- Dimension(mm) WxHxD : RS-21B : 200x42x183
  RS-22B : 400x42x183
- Weight : RS-21B : 975g / RS-22B : 1740g

Handheld/Bodypack Transmitter

- Frequency Range : UHF510 ~ 937.5MHz (Regionally Selected)
- Channel Select : Button select
- Display : LED shows the battery life
- RF Power Output : 10mW (max.)
- Frequency Stability : ±0.005%
- Spurious Emission : ＞60dB below carrier frequency
- Gain Setting **Bodypack** : 10dB, 0dB, -10dB (3 settings)
- Mic Unit **Handheld** : Uni-Direction dynamic unit or
  Uni-Direction electret condenser unit
  Bodypack: Lavalier Mic / Headset Mic / Instrument Mic
- Battery : DC3V (1.5V x 2AA size batteries)
- Current Consumption : 120±10mA
- Dimension(mm) WxHxD : **Handheld** : 260x56ø
  Bodypack : 65x97x25
- Weight : **Handheld** : 240g **Bodypack** : 84g

*The specifications are subject to change without notice.