USER'S MANUAL

UHF

WIRELESS MICROPHONE SYSTEM

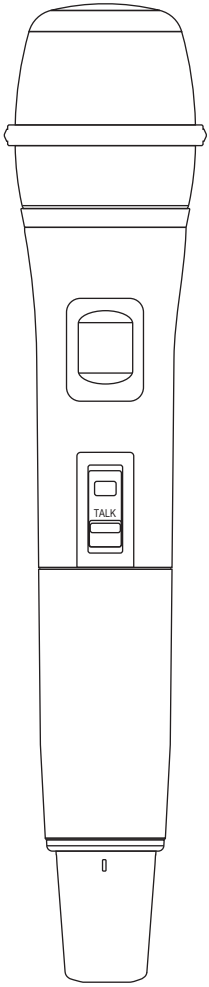

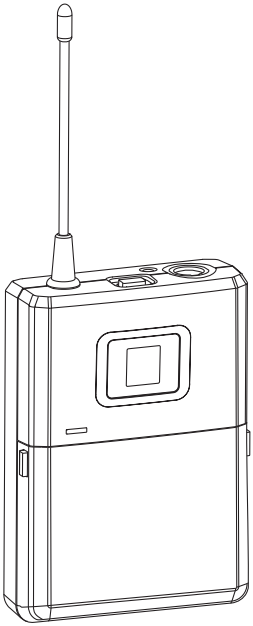

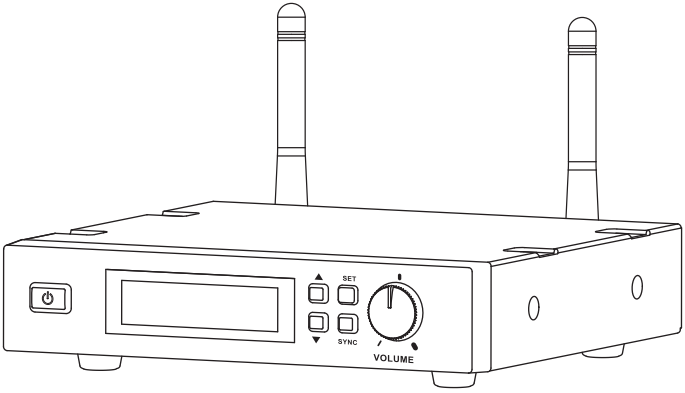

Introduction

Thank you for purchasing our product. This PLL synthesized wireless microphone system operates in UHF band frequency with 700 selectable channels. Please read this instruction manual carefully before operating the system. This manual covers the function and operation of the wireless microphone system.

FCC Statement

This device complies with part 15 of the FCC rules. Operation is subject to the following two conditions: (1)This device may not cause harmful interference and (2) This device must accept any interference received, including interference that may cause undesired operation.

FCC Caution: To assure continued compliance, any changes or modifications not expressly approved by the party responsible for compliance could void the user's authority to operate this equipment. (Example - use only shielded interface cables when connecting to computer or peripheral devices).

This equipment complies with FCC RF radiation exposure limits set forth for an uncontrolled environment. This device should be installed and operated so that its antenna(s) are not co-located or operating in conjunction with any other antenna or transmitter.

Safety

- Do not spill liquid on the appliance and do not drop it on a hard concrete floor.
- Do not place the equipment near heat sources such as radiators, heating ducts, amplifier, etc.
- Do not expose the equipment to direct sunlight, extremely dust, excessive moisture, rain, mechanical vibrations, or shock.
- Take out the battery from transmitter, if the appliance has been not used for a longer period. This will avoid the damage resulting from a defective leaking battery.
- If the equipment is not going to be used for a long time, disconnect the AC adapter from the power outlet. Please note that if you turn the equipment off while leaving the AC adapter plugged in, it is not fully isolated from the power supply.
- WARNING: To reduce the risk of fire or electric shock, do not use the products near water and do not expose them to rain or moisture.
- No guarantee claims for the equipment and no liability for any resulting personal damage or material damage will be accepted if the equipment are used for other purpose than originally intended, if the equipment are not correctly connected or operated, or if the equipment are not repaired in an expert way.

Environment

- Do not throw used batteries into a fire or garbage bin with domestic rubbish. Be sure to dispose of used batteries in accordance with local waste disposal rules.
- When disposing the equipment, remove the batteries, separate the case, circuit boards, and cables, and dispose of all components in accordance with local waste disposal rules.

Quick Start Guide

1. Connected Receiver Power Cable

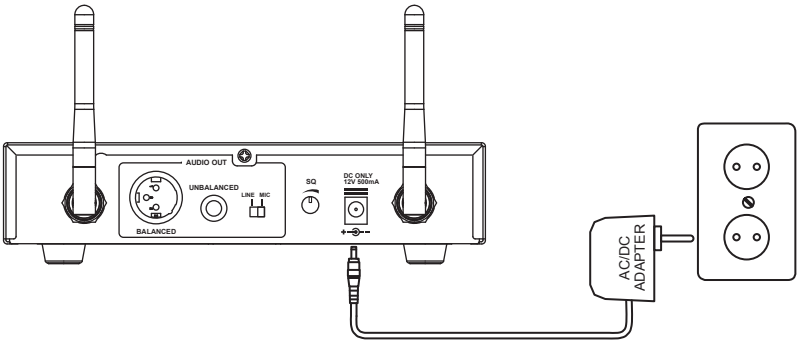

2. Connect Mixer or Amplifier

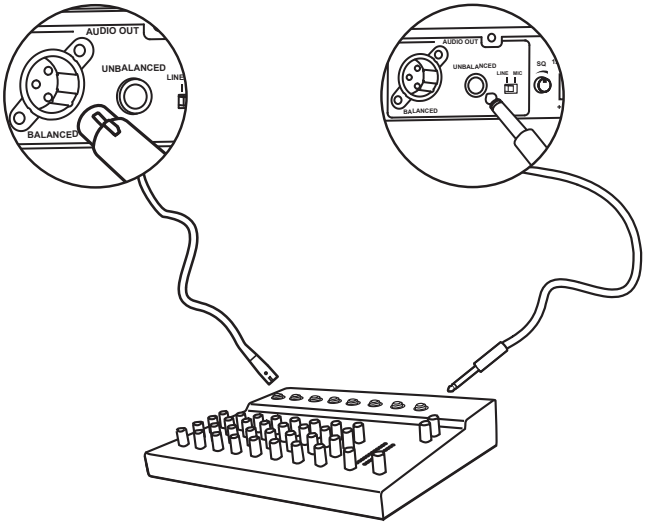

3. Scan Free Channel

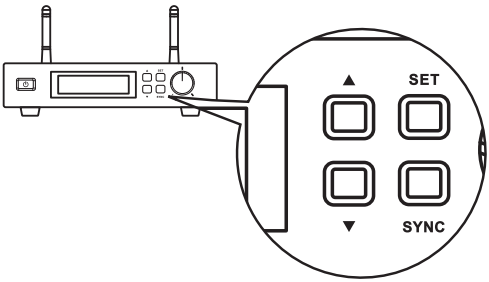

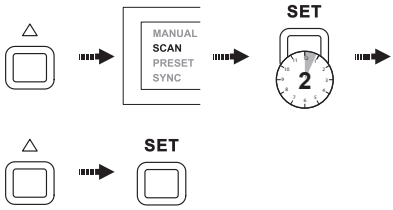

4. Insert Batteries

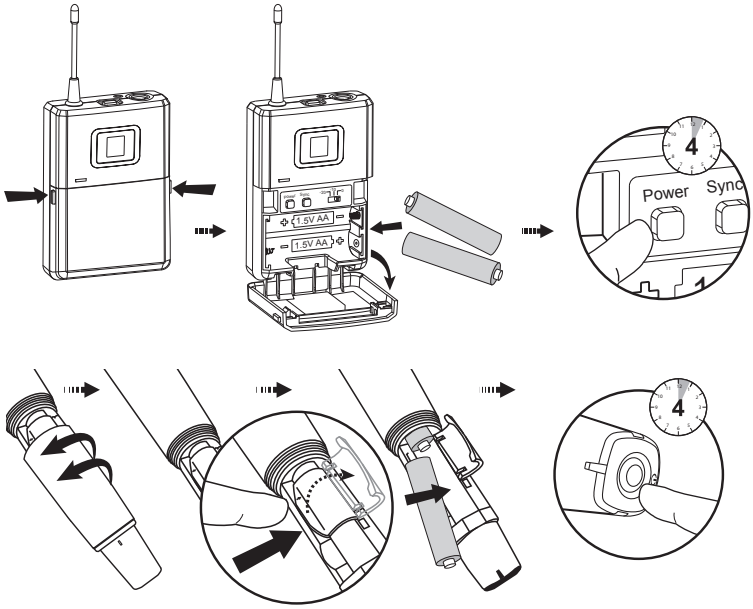

5. SYNC

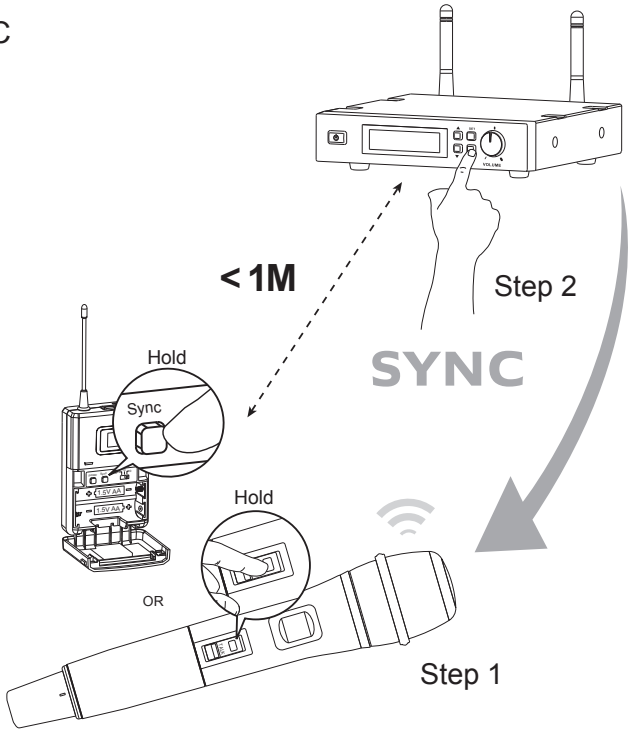

- **Receiver**

Front :

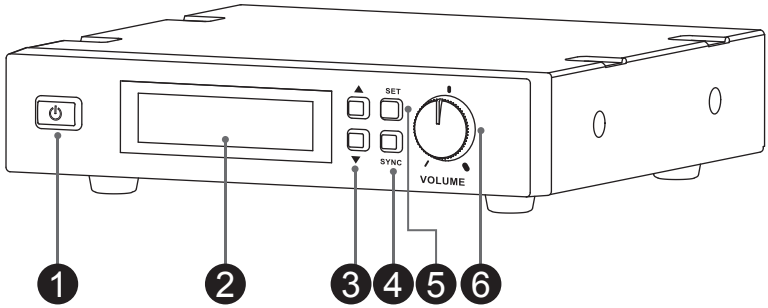

1. Power Button.
2. LCD Display: Display channel, frequency and settings.
3. Button ▲▼: Tap the channel forward / backward.
4. SYNC Button: Press the button to actuate the synchronization with transmitter.
5. SET Button: Press button to active the manual or auto-scan or preset mode.
6. Volume Controller: Adjust the receiver output level.

LCD Display :

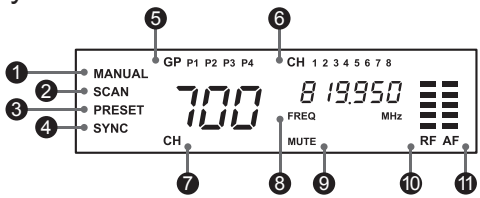

1. Manual: Use this mode to select free channel by manually.
2. Scan: Use this mode to set free channel by auto-scan function.
3. Preset: Use this mode to set multiple constructions by preset group.
4. SYNC: The synchronization process is actuated.
5. GP: Display selected preset group.
6. CH: Display selected preset channel.
7. CH: Display selected channel number.
8. FREQ.: Display selected frequency.
9. MUTE: Audio output is muted.
10. RF Bar: Display the reception status of RF signal.
11. AF Bar: Display the reception status of AF signal.

Rear :

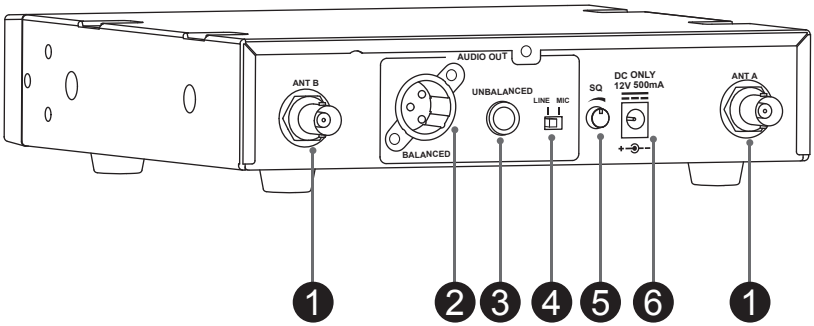

1. Antenna
2. Balanced XLR Audio Output
3. Unbalanced 6.35mm Audio Output
4. Mic/Line Switch: Use this to adjust audio output level for mic level (-20dB) or line level (0dB).
5. Squelch: Turn the knob to adjust or decrease the noise floor level.
6. Power Adapter connector

Handheld Microphone

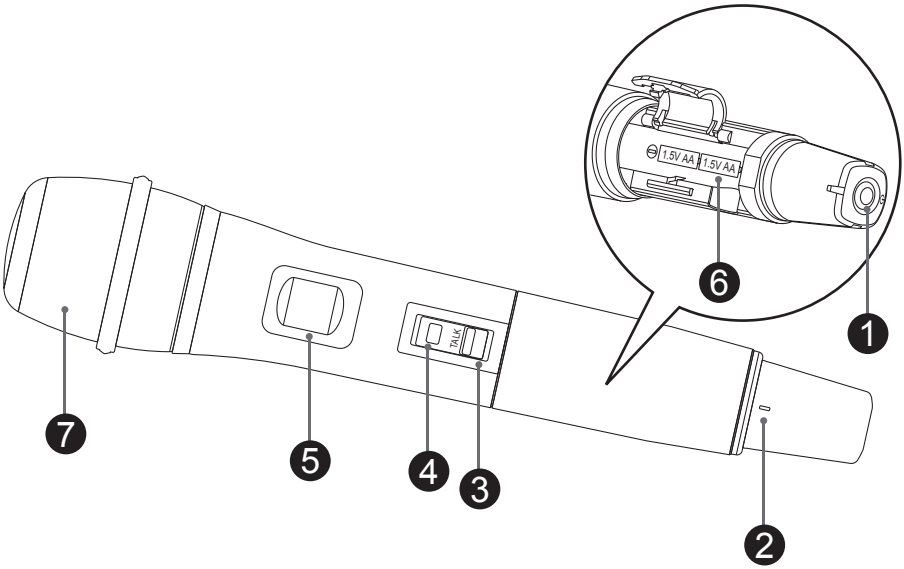

1. Power Button: Press for 2 seconds to power the microphone on or off.
2. Power LED: Indicate the power / low battery level status.

LED Indicator	Status
Green	Ready
Flashing Green	The synchronization process is actuated.
Flashing Red	Low battery power when less than 10 minutes operation

3. Talk Button: Push the button up to talk. Push the button down for mute.
4. SYNC Button: Press to actuate the synchronization process with the receiver.
5. LCD Display: Display channel number and battery power level.
6. Battery component: Insert two AA dry or rechargeable batteries into the compartment and make sure that the polarity of batteries is correct.
7. Grille: Protects the microphone capsule and helps reduce breath sounds and wind noise.

Bodypack Transmitter

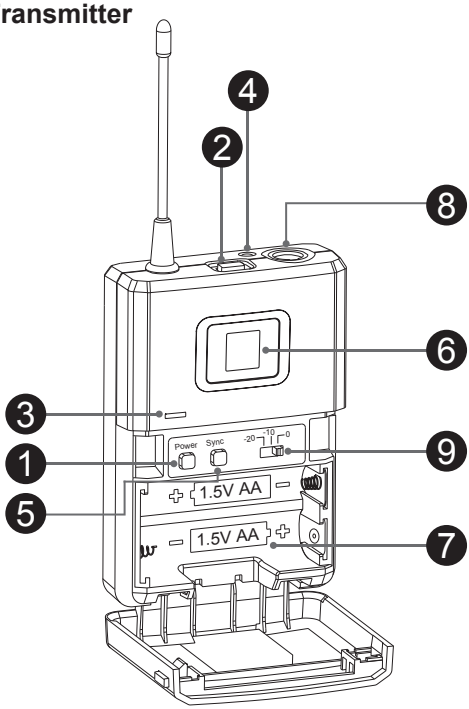

1. Power Button: Press for 2 seconds to power the microphone on or off.
2. Mute Button: With the transmitter on, a slight press for button will toggle between mute and unmute function.
3. Power LED: Indicate the power / low battery level status

LED Indicator	Status
Green	Ready
Flashing Green	The synchronization process is actuated.
Flashing Red	Low battery power when less than 10 minutes operation

4. MUTE LED: Blue LED light on in mute status.
5. SYNC Button: Press to actuate the synchronization process with the receiver.
6. LCD Display: Display channel number and battery power level.
7. Battery component: Insert two AA dry or rechargeable batteries into the compartment and make sure that the polarity of batteries is correct.
8. Mini XLR Connector: Connect to the lapel microphone or headset microphone.
9. Gain Switch: The switch sets the audio input to -20dB, -10dB, 0dB.

Connecting the receiver

Prior to setting up, please check that the transmitter and receiver are tuned to the same frequency or channel. Two or more transmitters operating in the same frequency can not be used at the same time and area.

1

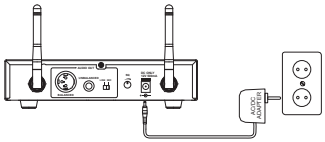

➢ Connected the provided DC power supply to the receiver power input with an appropriate AC power source. The LCD display will light and the receiver is on.

2

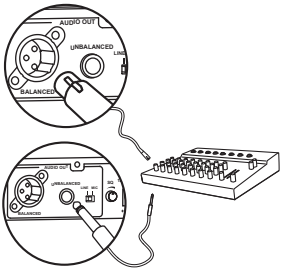

➢ Using a standard audio cable with 3-pin XLR connectors or 6.3mm phone plugs to connect the mixer or amplifier.

✧ Never use the balanced and unbalanced audio outputs at the same time! This may cause signal loss or increased noise.

3

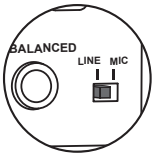

➢ Set the audio output level for
MIC: -20dB
LINE: 0dB (Default Setting)

4

➢ Using the Volume Controller to adjust the AF audio level to the input of the amplifier or mixer.

✧ Default Setting: In minimum VOLUME position.

5

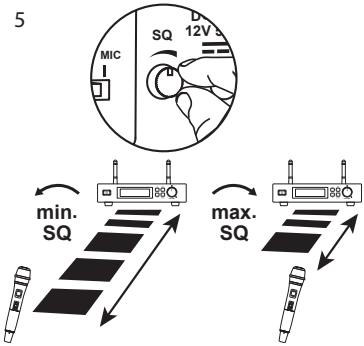

➢ Use squelch to eliminate or suppress the ambient RF noise.

✧ Defaulting Setting: In properly position.

Setting up channel on receiver

Notice: Do not put two or more transmitters operating nearby when setting up the frequency channel. Please keep transmitter at least one meter away from receiver.

➢ **Manual Mode**

Setting interference-free channel by manual operation.

➢ Using the △ button to select the “MANUAL” mode.

➢ Press “SET” button for 2 seconds till LCD display is flashing.

➢ Press button △ to change the channel forward.

➢ Press the “SET” button to lock the setting.

➢Auto-Scan Mode

Set interference-free channel by automatic frequency scan function.

➢ Using the △ button to select the “SCAN” mode.

➢ Press “SET” button for 2 seconds till LCD display is flashing.

➢ Press button △ to scan in forward direction, and it will stop at the free-interference channel automatically.

➢ Press the “SET” button to lock the setting.

NOTE: If user need to set up a multi-receiver system, please keep your previous receiver-microphone pair power on. Then go on to next scanning procedure.

➢Preset Mode

Set multiple constructions by using preset channels. There are 4 preset groups. Excluding the interference from external, there are 8 preprogrammed channels can be operated simultaneously in each group.

➢ Using the △ button to select the “PRESET” mode.

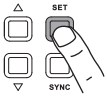

➢ Press “SET” button for 2 seconds till LCD display is flashing.

➢ Press channel button △ to change the programmable group forward.

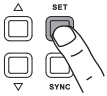

➢ Press the “SET” button to lock the group setting.

➢ Press channel button △ to change the programmable channel forward.

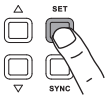

➢ Press the set button to lock the channel setting.

NOTE:When there is any outside interference on the current preset group, please switch to use next preset group. If 4 preset groups are all under interference, please use auto-scan mode or manual mode to set up system.

Set up the handheld microphone / bodypack transmitter

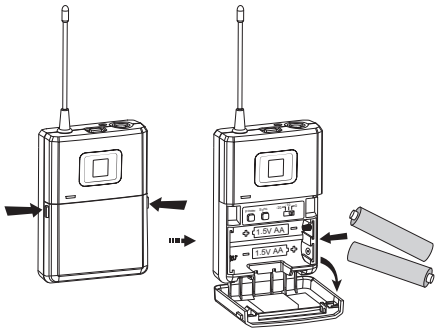

- Open the battery cover and insert batteries into the battery compartment conforming to the polarity (+)(-) marks.

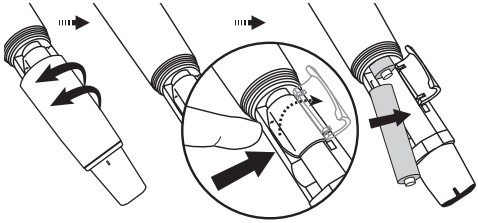

- Unscrew the handheld Mic and open the battery cover to insert the battery into the battery compartment and confirm the marks of the polarity (+) (-).

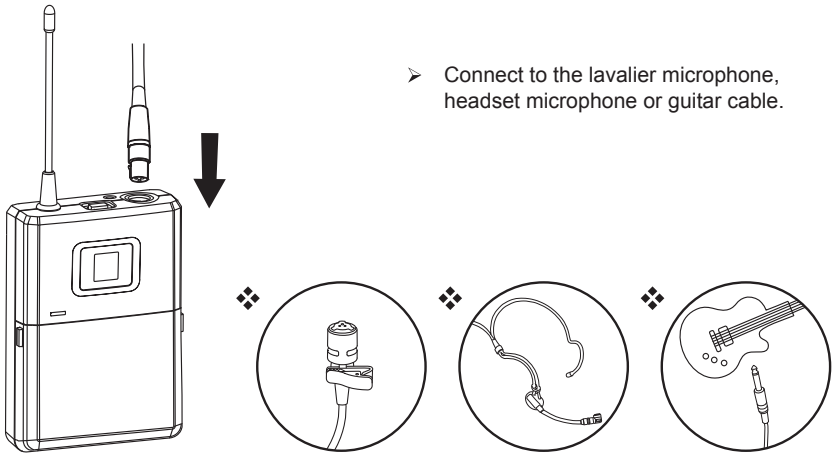

- Connect to the lavalier microphone, headset microphone or guitar cable.

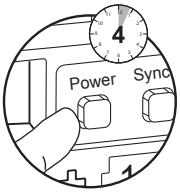

Bodypack

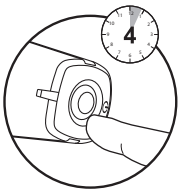

Handheld

➢ Press for 4 seconds to turn the Handheld/ Bodypack transmitter on.

✧ If the LED stays flashing , it indicates that the battery will out of power soon and should be changed.

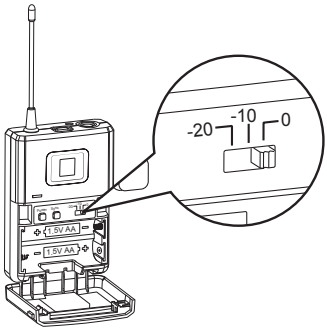

➢ Adjust the audio input level.

- 0dB (Default Setting)
- -10dB
- -20dB

• 0dB

• -10dB

• -20dB

NOTE: When you don't use this device for a long term period, please switch the power switch to "off" mode to save more electric power.

Synchronizing a transmitter with a receiver

Automatic frequency synchronization via remote channel for easy setup.

- First, switch the transmitter and the receiver on. Press and hold the SYNC button on your transmitter. The SYNC flashes on the receiver display panel.

  Press the SYNC button on the receiver front panel, the transmitter will set the same channel as receiver automatically.

- When using SYNC setting, the distance of receiver and transmitter is within 1 M.

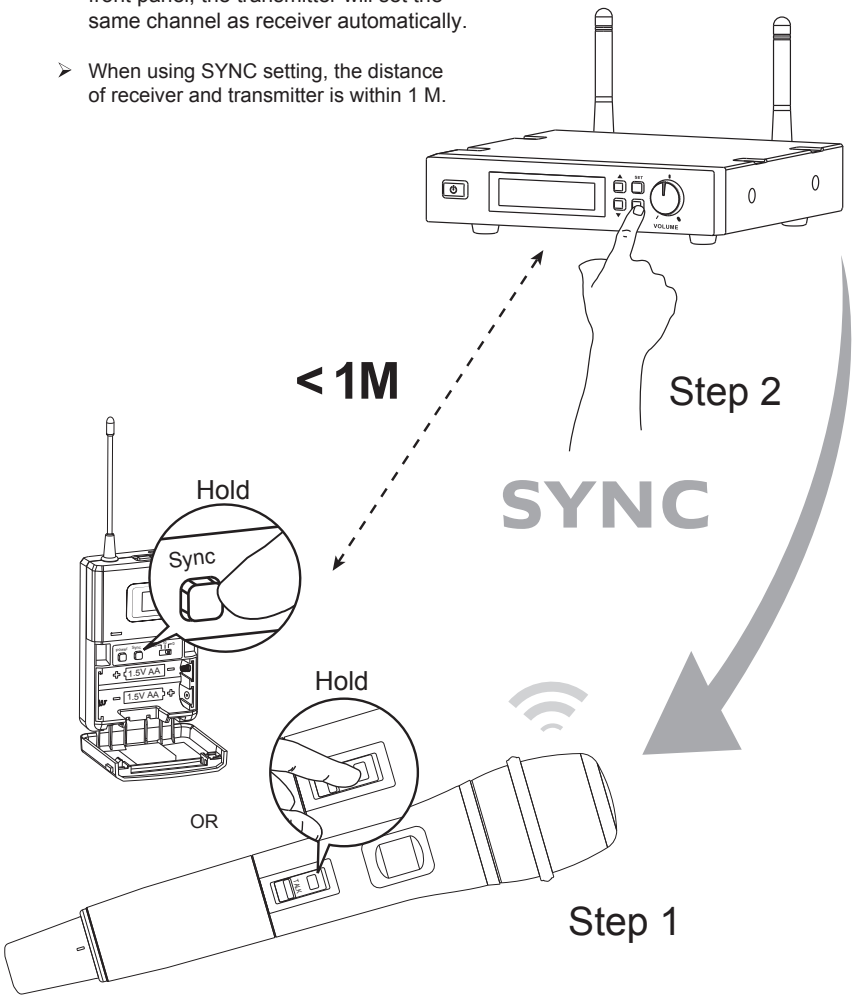

Color Label Identification

You can also stick the color label on the receiver and transmitter for quickly identify the pair system.

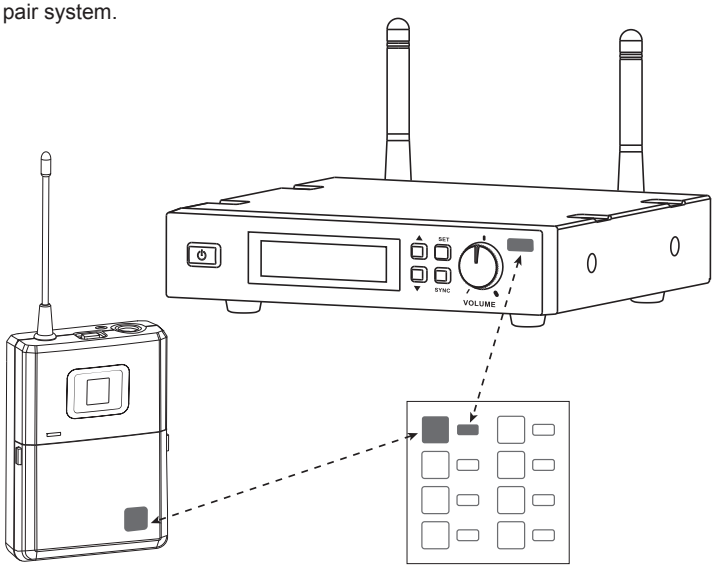

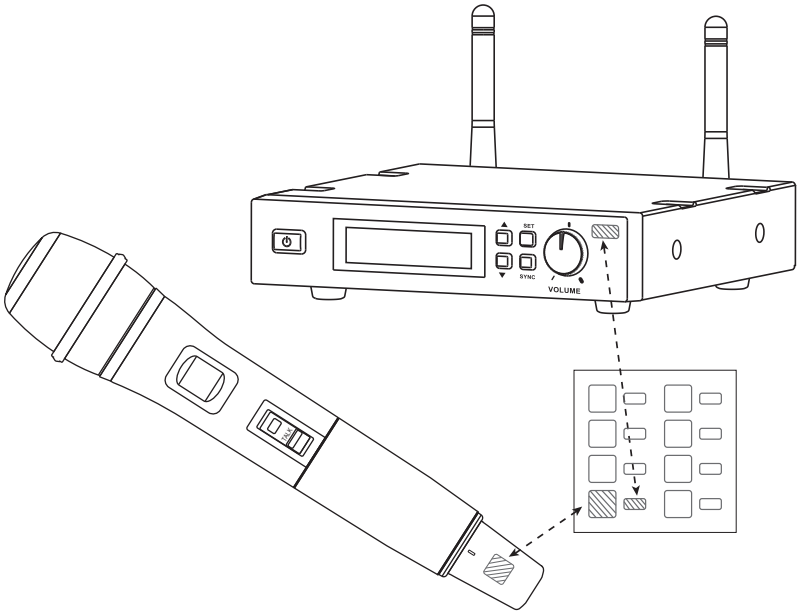

Basic Connections

To combine two receivers in a 19” standard rack by using 2 short L type metal racks and 2 metal connecting plates.

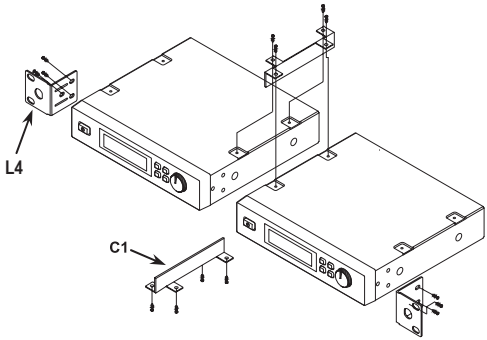

To mount a receiver in a 19” standard rack by using 2 long L type metal racks.
(L type long metal racks is an optional product, so please purchase extra in local shops.)

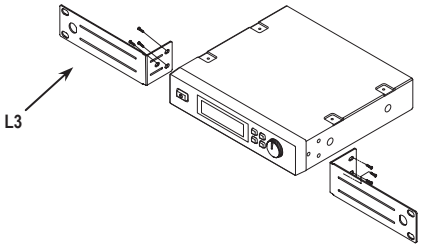

By using the antenna holder to install the UHF antenna in high place for better reception quality.

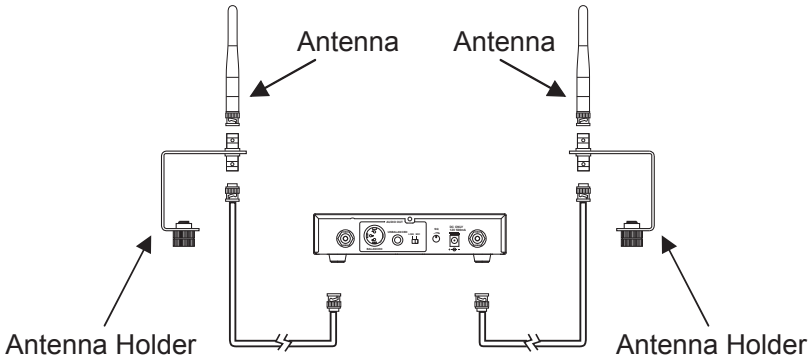

Trouble Shooting

Problem	Solution
No sound	➢ Check the power supply of the microphone and receiver. ➢ Check that the transmitter and receiver are tuned to the same frequency. ➢ Check whether the hi-fi appliance is switched on and the receiver output is connected to audio mixer or amplifier input. ➢ Check whether transmitter is too far away from receiver or SQUELCH control set too high. ➢ Check whether receiver is located too near metal object or there are obstructions between transmitter and receiver.
Sound interference	➢ Check the antenna location. ➢ When using 2 or above microphone sets simultaneously, make sure that the chosen frequencies are not interfered. ➢ Check whether the interference comes from other wireless microphones, TV, radio and etc.
Distortion	➢ Check the receiver volume level whether is set too high or too low. ➢ Check whether the interference comes from other wireless microphones, TV, radio and etc.

System Performance

Receiver

- Frequency Range :
- Case : Half 19” EIA Rack Metal Case
- Oscillator : PLL Synthesized
- Modulation : FM
- S/N Ratio : ＞100dB, at 20KHz deviation and 60dBμV antenna input
- Image & Spurious Rejection : 70dB minimum
- Receiving Sensitivity : At 2μV over 52dB S/N ratio
- AF Response : 80Hz to 18KHz
- T.H.D. : ＜1% (at 1KHz)
- IF Frequency : 1st: 243.95MHz 2nd: 10.7MHz
- Dynamic Range : ＞100dB
- Tone Signal : 32.768KHz
- Audio Output : Balanced & Unbalanced
- Power Supply : DC12V
- Current Consumption : 260±10mA
- Dimension(MM) WxHxD : 200x42x183
- Weight : 930g

Handheld/Bodypack Transmitter

- Frequency Range : 520-608 MHz, 614-617 MHz, 652-663 MHz
- Channel Select : SYNC with Receiver
- Display : LCD displays status of channel, battery :
- RF Power Output 10mW (max.)
- Frequency Stability : ±0.005%
- Spurious Emission : ＞60dB below carrier frequency
- Gain Setting **Bodypack** : 0dB, -10dB, -20dB (3 settings)
- Mic Unit **Handheld** : Uni-Direction dynamic unit or Uni-Direction electret condenser unit
  Bodypack: Lavalier Mic / Headset Mic
- Battery : 1.DC2.4V(1.2V x 2AA size rechargeable batteries)
  2.DC3V (1.5V x 2AA size batteries)
- Current Consumption : 120±10mA
- Dimension(mm) WxHxD **Handheld** : 260x54Φ **Bodypack** : 65x97x25
- Weight **Handheld** : 234g **Bodypack** : 86g

* The specification subject to change without notice.

440-0100-02