USER'S MANUAL

UHF BAND

WIRELESS MICROPHONE SYSTEM

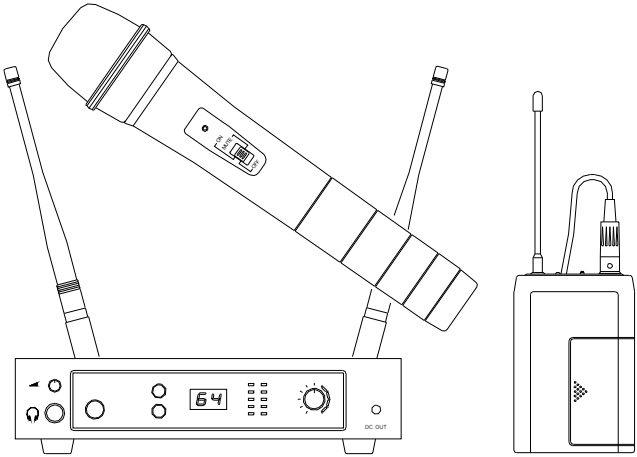

WIRELESS MICROPHONE SYSTEM

Table of Contents

1. Introduction …… 1

2. Safety …… 1

3. Environment …… 1

4. Wireless Note…… 1

5. Product Description …… 2

5.1 Receivers

5.1.1 True-diversity type

5.1.2 Switching-diversity type

5.1.3 Non-diversity type

5.3 Handheld Microphone

5.4 Bodypack Transmitter

6. Basic Connections……

7. Setting Up ……

7.1 Connecting the receiver to power

7.2 Connecting the receiver to an audio mixer or an amplifier

7.3 Inserting batteries into the handheld / bodypack transmitter

7.4 Setting up the handheld transmitter

7.5 Setting up the bodypack transmitter

8. Trouble-shooting ……

9. System Feature……

FCC Statement

This device complies with part 15 of the FCC rules. Operation is subject to the following two conditions: (1)This device may not cause harmful interference and (2) This device must accept any interference received, including interference that may cause undesired operation

Notice : The changes or modifications not expressly approved by the party responsible for compliance could void the user's authority to operate the equipment.

IMPORTANT NOTE: To comply with the FCC RF exposure compliance requirements, no change to the antenna or the device is permitted. Any change to the antenna or the device could result in the device exceeding the RF exposure requirements and void user's authority to operate the device.

1. Introduction

Thank you for purchasing our product. This wireless microphone system operates in UHF band frequency with synthesizer controlled. Each system with 16 or 64 selectable frequencies via Phase Locked Loop (PLL) circuitry makes it easy to choose non-interfered channels.
Please read this instruction manual carefully before operating the system. This manual covers the function and operation of the wireless microphone system.

2. Safety

- Do not spill liquid on the appliance and do not drop it on a hard concrete floor.
- Do not place the appliance near heat sources such as radiators, amplifier, or etc. Do not expose it to direct sunlight, extremely dust, excessive moisture, or vibration.
- Take out the battery from transmitter, if the appliance has been not used for a longer period. This will avoid the damage resulting from a defective leaking battery

3. Environment

- Do not throw used batteries into a fire or garbage bin with domestic rubbish. Be sure to dispose of used batteries in accordance with local waste disposal rules.
- When disposing the equipment, remove the batteries, separate the case, circuit boards, and cables, and dispose of all components in accordance with local waste disposal rules.

4. Wireless Note

- Before setting up, make sure that the transmitter and receiver are tuned to the same frequency.
- Do not use two transmitters in the same frequency.
- Use good quality batteries to avoid the damage resulting from a defective leaking battery.
- Turn the volume control on the receiver to adjust receiver output level to match input level requirements of an audio mixer or an amplifier. (Refer to 7.2)
- To avoid interference, do not put the receiver too near metal object and avoid obstructions between transmitter and receiver.
- Avoid the interference from TV, radio, other wireless appliances and etc.

5. Product Description

5.1 **Receivers**

The receiver operates in UHF band frequency with PLL synthesizer control. They are used with all our 16- or 64-selectable channels transmitters. Powered by 12V DC.

5.1.1 **Diversity Type Receiver**

Single channel, 1/2 rack

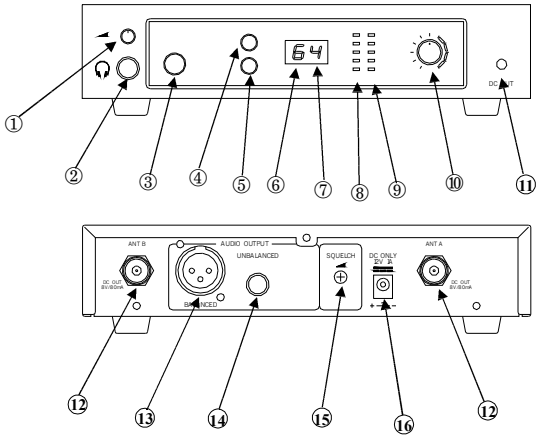

Dual channel, full rack

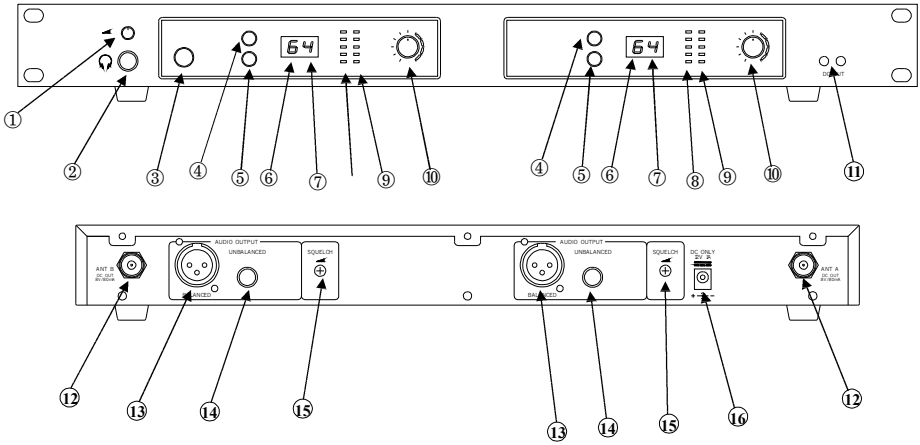

1. **Headphone Monitor Volume Control:** Rotate this knob to control headphone volume level.
2. **Headphone Input Connector:** Plug headphone into this 6.3φ connector to monitor receiver audio.
3. **Power:** Pushes the receiver on and off.
4. **Group Selector:** Rotates this selector to choose a displayed group number.
5. **Channel Selector:** Rotates this selector to choose a displayed channel number.
6. **Group LED Display:** Displays group number.
7. **Channel LED Display:** Displays channel number.
8. **RF Level Indicators:** Five LEDs per RF antenna channel glow to indicate RF signal strength. The more LEDs that glow, the stronger the received signal. If none of these LEDs glow, no signal is being received.
9. **AF Level Indicators:** Five LEDs glow to indicate audio signal strength. Green indicates normal operation. RED indicates approaching overload condition.
10. **Level Control:** This rotary control adjusts the receiver output level to match the input sensitivity of a mixer or amplifier
11. **DC Out:** Connect the supplied DC1.5 cable to the receiver and the microphone, and it takes around 10 hours to recharge and the LED of transmitter is flashing all the time.
12. **Antenna Input Connector:** TNC-type connectors provide connection to the supplied antennas or to coaxial cable used with an antenna divider, antenna boosters or remote antennas.
13. **Balanced Output:** 3-pin XLR connector provides balanced low-impedance output.
14. **Unbalanced Output:** 6.3φ phone jack provides unbalanced low-impedance output.
15. **Squelch:** The squelch adjusts the output level to suppress the noise. Setting the squelch too high will reduce the usable range of the system. Set the squelch to minimum before turning the receiver on.
16. **DC IN:** Input connector for the supplied AC adapter.

5.1.2 Switching-diversity Type

Single Channel, Diversity, Mini Case

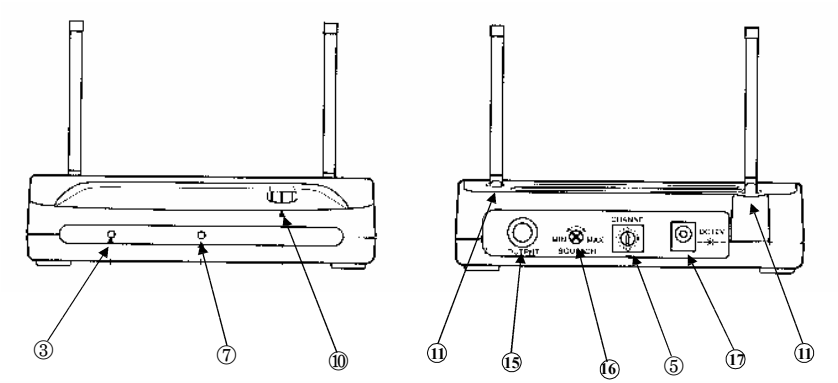

Single Channel, Diversity, Mini Case

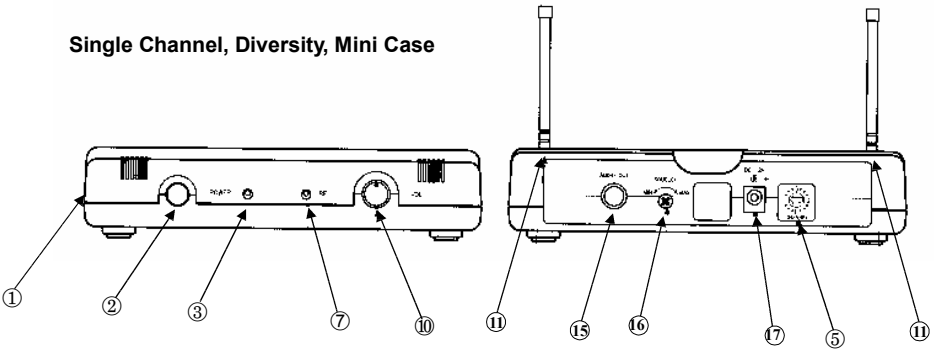

Single Channel, Diversity, 1/2 Rack

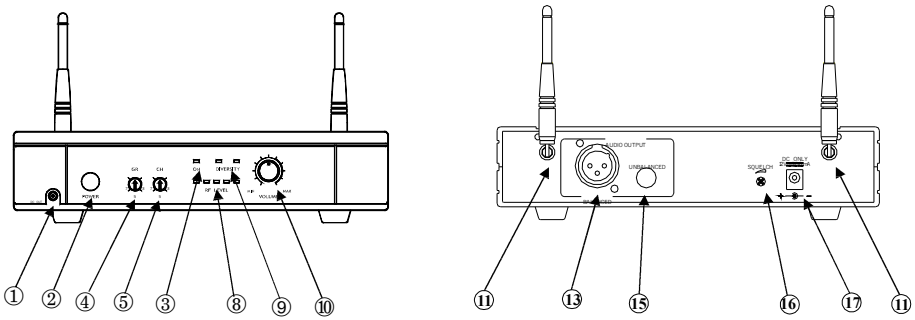

Single Channel, Diversity, 1/2 Rack
Detachable Antenna

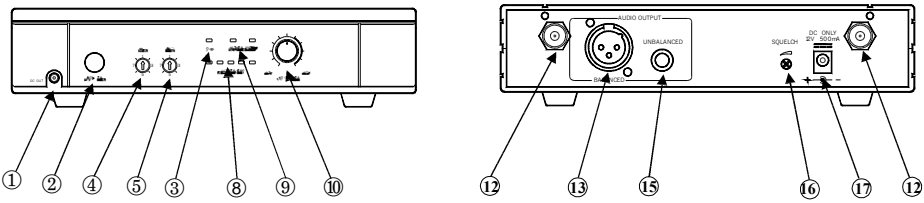

Dual Channel, Diversity, full Rack
Detachable Antenna,

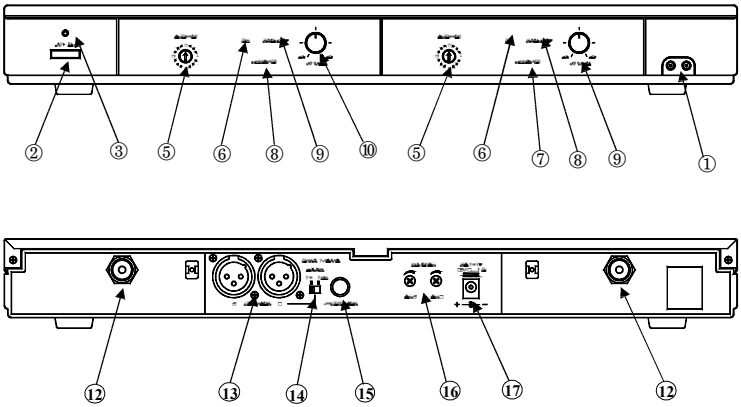

Dual Channel, Diversity, full Rack

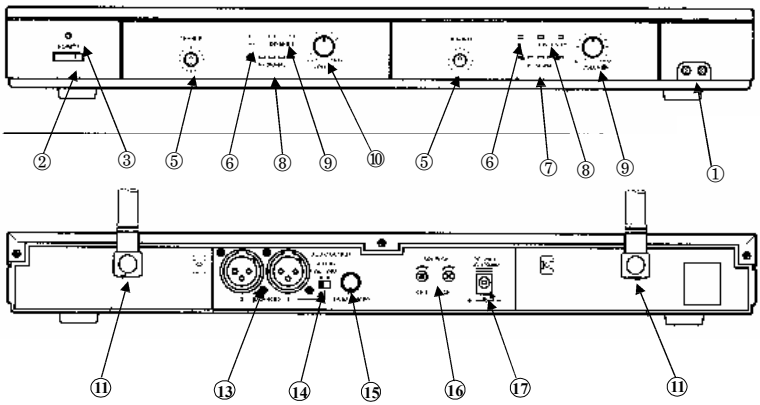

1. **DC Out:** Connect the supplied cable to the receiver and the microphone, and it takes around 10 hours to recharge and the LED of transmitter is flashing all the time.
2. **Power:** Pushes the receiver on and off.
3. **Power Indicator:** The indicator LED lights when the receiver is ready to operate.
4. **Group Selector:** Changes receiver Group setting. (for 64-selectable channels)
5. **Channel Selector:** Changes receiver Channel setting.
6. **AF Indicator:** The indicator glows to indicate that audio signal has been received.
7. **RF Indicator:** This LED lights to indicate that signal is being received.
8. **RF Level Indicators:** Five LEDs per RF antenna channel glow to indicate RF signal strength. The more LEDs that glow, the stronger the received signal. If none of these LEDs glow, no signal is being received.
9. **Diversity A.B Indicator:** This LED lights to show that antenna has received the RF signal.
10. **Level Control:** This rotary control adjusts the receiver output level line level to match the input sensitivity of the audio mixer or amplifier.
11. **Antenna:** Fixed-length UHF antenna permanently mounted either on rear panel.
12. **Antenna Input Connector:** TNC-type connectors provide connection to the supplied antennas or to coaxial cable used with an antenna divider, antenna boosters or remote antennas.
13. **Balanced Output:** 3-pin XLR connector provides balanced low-impedance output .
14. **Mixing Switch:** When the MIXING switch is in the OFF position, the XLR output for channels 1 and 2 are separate. When the MIXING switch is in the ON position, the XLR output for channels 1 and 2 are mixed, so that both XLR outputs have combined signal from both channel 1 and channel 2.
15. **Unbalanced Output:** 6.3φ phone jack provides unbalanced low-impedance output.
16. **Squelch Adj. :** The squelch adjusts the output level to prevent from the external noise. Setting the squelch too high will reduce the usable range of the system. Set the squelch to minimum before turning the receiver on.
17. **DC Jack:** DC input connector for the supplied AC adapter.

5.3 **Non-diversity Type Receiver**

Single Channel, Non-Diversity

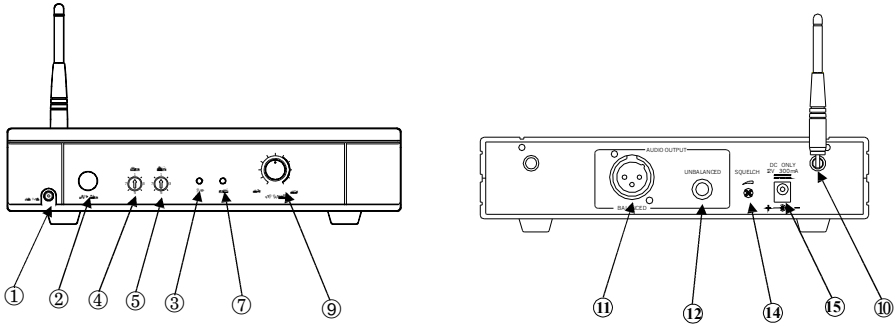

Dual Channel, Non-Diversity

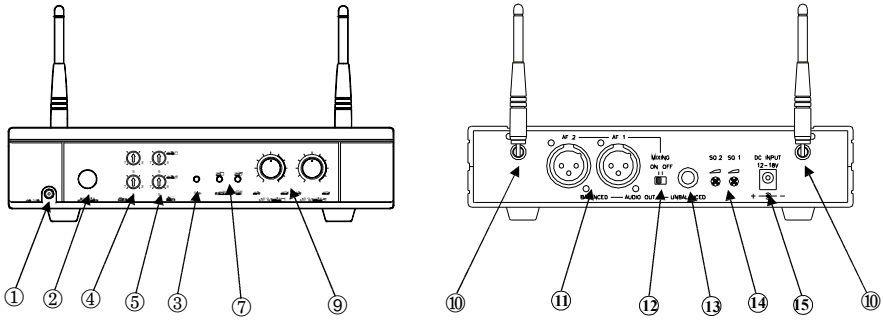

Dual Channel, Non-Diversity

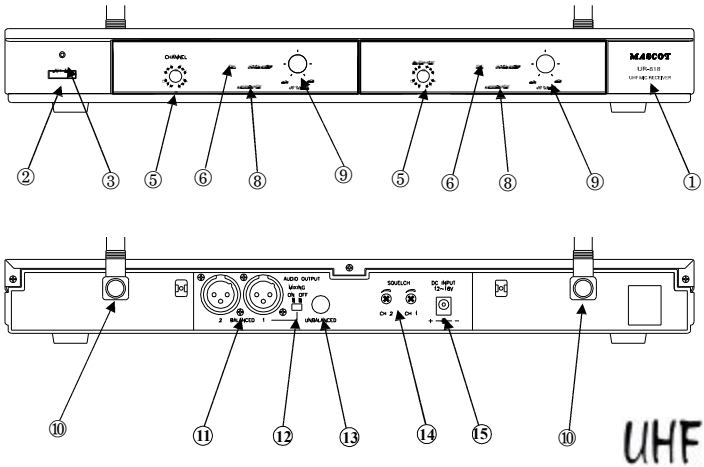

1. **DC Out:** Connect the supplied cable to the receiver and the microphone, and it takes around 10 hours to recharge and the LED of transmitter is flashing all the time.
2. **Power:** Pushes the receiver on and off.
3. **Power Indicator:** The indicator LED lights when the receiver is ready to operate.
4. **Group Selector:** Changes receiver Group setting. (for 64-selectable channels)
5. **Channel Selector:** Changes receiver Channel setting.
6. **AF Indicator:** The indicator glows to indicate that audio signal has been received.
7. **RF Indicator:** This LED lights to indicate that signal is being received.
8. **RF Level Indicators:** Five LEDs per RF antenna channel glow to indicate RF signal strength. The more LEDs that glow, the stronger the received signal. If none of these LEDs glow, no signal is being received.
9. **Level Control:** This rotary control adjusts the receiver output level to match the input sensitivity of the audio mixer or amplifier.
10. **Antenna:** Fixed-length UHF antenna permanently mounted on rear panel.
11. **Balanced Output:** 3-pin XLR connector provides balanced low-impedance output.
12. **Mixing Switch:** When the MIXING switch is in the OFF position, the XLR output for channels 1 and 2 are separate. When the MIXING switch is in the ON position, the XLR output for channels 1 and 2 are mixed, so that both XLR outputs have combined signal from both channel 1 and channel 2.
13. **Unbalanced Output:** 6.3φ phone jack provides unbalanced low-impedance output.
14. **Squelch Adj. :** The squelch adjusts the output level to prevent from the external noise. Setting the squelch too high will reduce the usable range of the system. Set the squelch to minimum before turning the receiver on.
15. **DC Jack:** DC input connector for the supplied AC adapter.

The detachable clip on the bottom of receiver is designed to hang on the supplied hook for flexible location, such as on speaker amplifier, guitar amplifier or wherever you want.

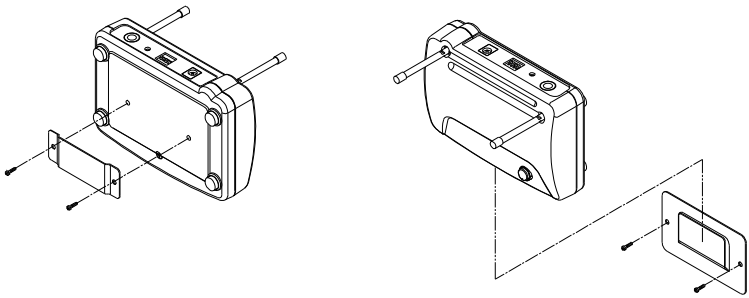

To combine two receivers in a 19” standard rack by using 2 short L type plastics racks (L2) and 2 metal connecting plates (C1). (Each system includes a L2 and a C1.)

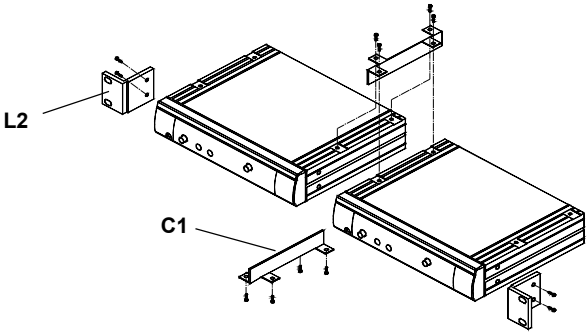

To mount a receiver in a 19” standard rack by using 2 L type long metal racks (L1).
(L1 is an optional product, so please purchase extra in local shops.)

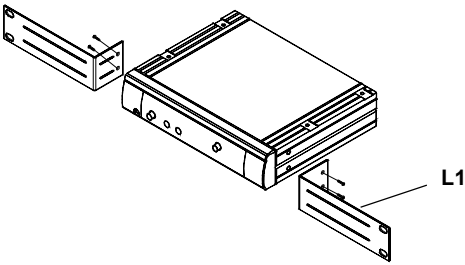

Charging Connecting Diagram

Connect the supplied DC1.5 cable to the receiver and the microphone, and it takes around 10 hours to recharge and the LED of transmitter is flashing all the time.

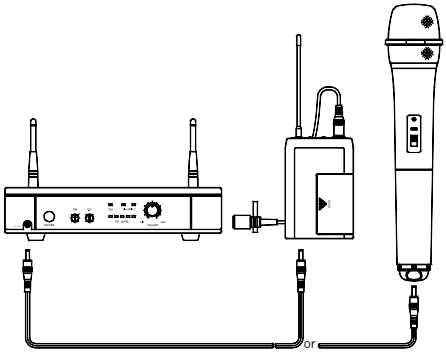

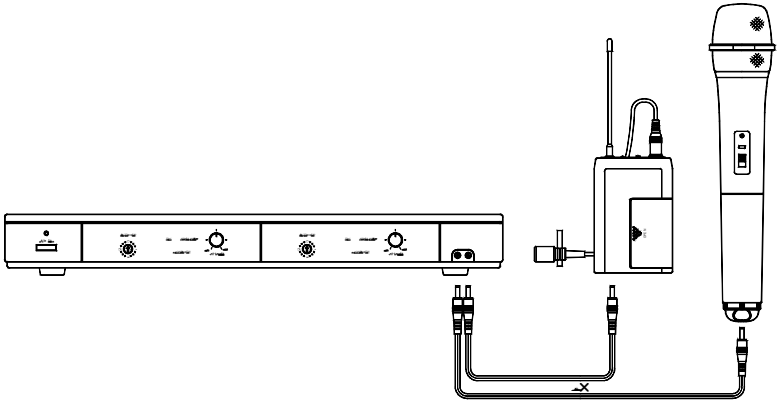

5.3 Handheld Microphone

The handheld microphone operates in UHF band frequency with PLL synthesized control. UHF 16 or 64 preprogrammed selectable frequencies to avoid interference. Uni-directional dynamic or uni-directional electret condenser cartridges with different characters for various choices.
Use 1.5V x 2 AA size batteries for low operating cost.

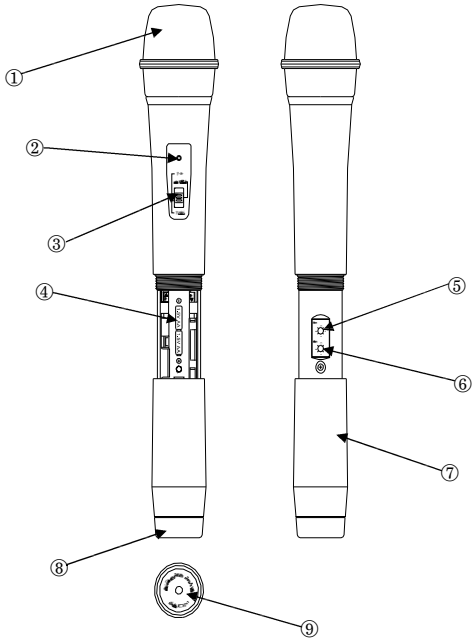

1. **Grille:** Protects the microphone capsule and helps reduce breath sounds and wind noise.
2. **Low Battery LED:** LED indicates battery status. Switching the power to "ON", the LED flashing once indicates that the transmitter has sufficient power. If the LED stays on, it indicates that the battery has insufficient power and should be changed soon. If the status LED fails to flash, the battery is either dead or not positioned correctly, and you should correct the positioning or change the battery.
3. **On/off Switch:** Turns transmitter power on and off.
4. **Battery Compartment:** Insert two AA batteries into the compartment and make sure that the polarity of batteries is correct.
5. **Group Selector:** Changes transmitter group setting. (for 64-selectable channels)
6. **Channel Selector:** Changes transmitter channel setting.
7. **Battery Cover:** Unscrew to expose battery compartment and Group/Channel selector.
8. **Color Clip:** This color clip helps to identify the frequency for multi-channel operation.
9. **Charging Input:** The inserted rechargeable batteries can be charged by using the supplied DC-plug cable connection to DC out on the receiver. It takes up to 10 hours for charging.

5.4 Bodypack Transmitter

The bodypack transmitter operates in UHF band frequency with PLL synthesized control. UHF 16 or 64 preprogrammed selectable frequencies to avoid interference. Uni-directional electret condenser cartridges with different characters for various choices. Use 1.5V x 2 AA size batteries for low operating cost.

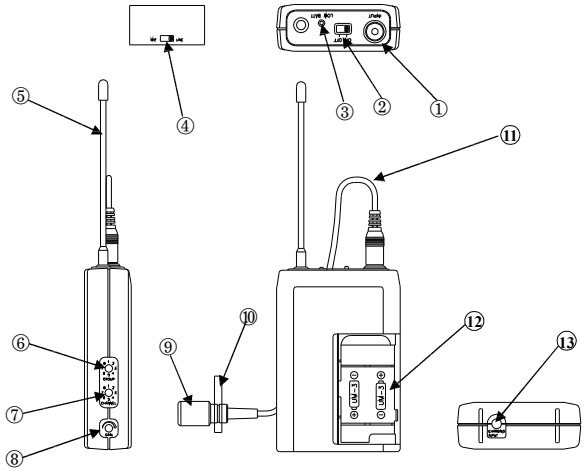

1. **Mini XLR connector:** The included electret lapel microphone is inserted into the connector on transmitter.
2. **On/Off Switch:** Turns transmitter power on and off.
3. **Low Battery LED:** LED indicates battery status. Switching the power to "ON", the LED flashing once indicates that the transmitter has sufficient power. If the LED stays on, it indicates that the battery has insufficient power and should be changed soon. If the status LED fails to flash, the battery is either dead or not positioned correctly, and you should correct the positioning or change the battery.
4. **Mic/Line Selector:** The switch sets the audio input either to microphone level or line level.
5. **Antenna:** Permanently connected, helical antenna.
6. **Group Selector:** Changes transmitter group setting. (for 64-selectable channels)
7. **Channel Selector:** Changes transmitter channel setting.
8. **Mic Adj.:** The rotary control adjusts the sensitivity of the transmitter's audio to the level of the connected lapel microphone or instrument.
9. **Mic Unit:** The uni-directional electret condenser unit features the wide frequency response for warm, rich bass and clear sound.
10. **Tie Clip:** To clip on the tie or lapel.
11. **Cable:** With mini XLR connector cable to connect the transmitter.
12. **Battery Compartment:** Insert two AA dry or rechargeable batteries into the compartment and make sure that the polarity of batteries is correct.
13. **Charging Input:** The inserted rechargeable batteries are charged by using the supplied DC-plug cable connection to DC out on the receiver. It takes up to 10 hours for charging.

6. Basic Connections

Connect the receiver output to the audio mixer or amplifier input, using a standard audio cable with 3-pin XLR connectors or 6.3φ phone plugs. Never use the balanced and unbalanced audio outputs at the same time! This may cause signal loss or increased noise.

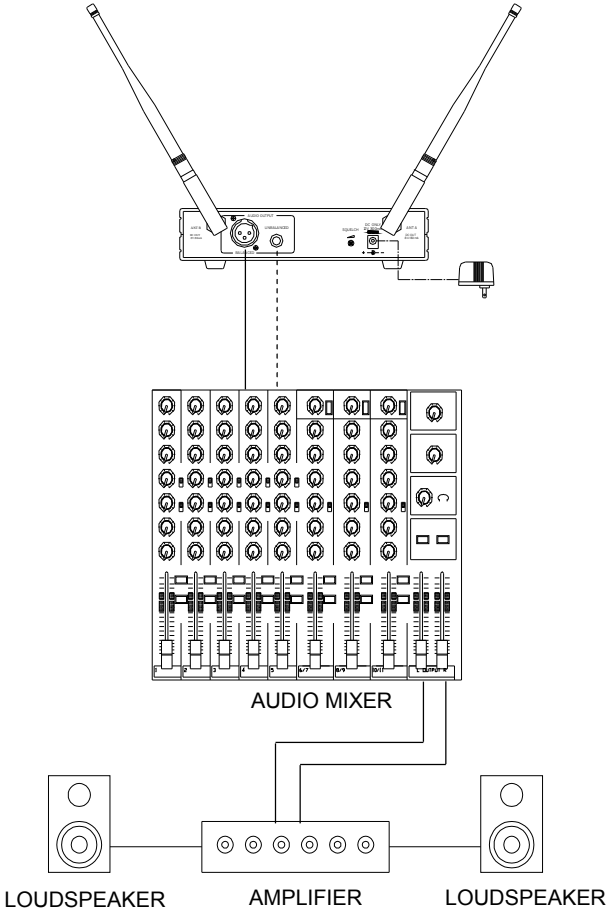

AB-8A, the antenna booster is highly recommended for long-distance purpose, such as in stadium or in auditorium. By means of antenna holder, the antenna and booster can put wherever you want. It is ideal design for multi-channel application. Antenna boosters are applied to the receivers, which have detachable antennas.

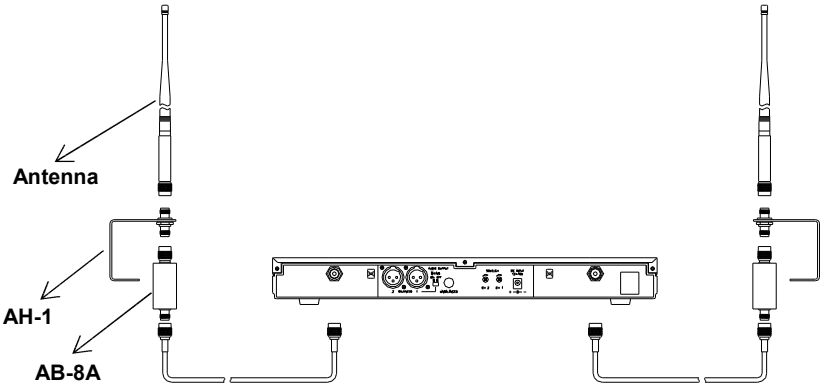

Antenna holder makes it easy to fix wherever for connection antenna and booster. AH-1 can be assembled on the mic stand or on the wall.

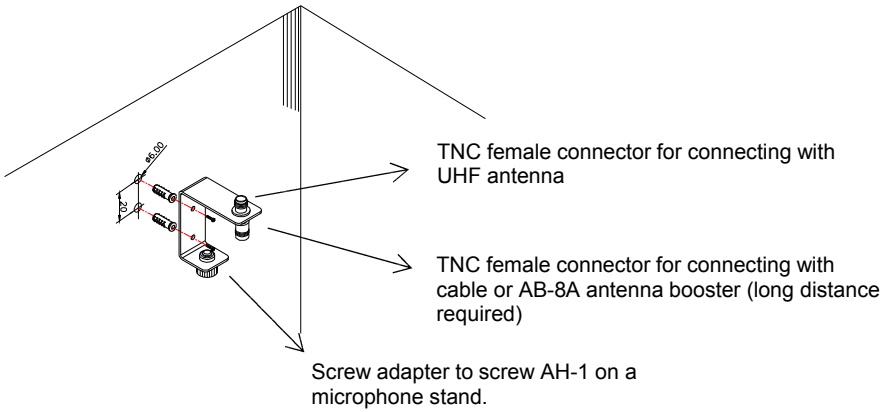

7. Setting Up

NOTICE: Prior to setting up, check that the transmitter and receiver are tuned to the same frequency. Two or above transmitters operating in the same frequency can not be used at the same time and area, so please select the different frequencies which can be used simultaneously at local area.

7.1 Connecting the receiver to power

- Plug the antennas into the TNC socket on the receiver, if the antennas are detachable and point them upward.
- Check that the voltage of the supplied AC adapter conforms to the voltage (AC110 or 220) available in local area. Using the wrong AC adapter may cause irreparable damage to the unit.
- Plug the feeder cable of the supplied AC adapter into DC IN socket on the receiver. Then plug the AC adapter into a power outlet.

7.2 Connecting the receiver to an audio mixer or an amplifier

In order to make sure the sound quality and avoid distortion, please adjust the volume level according to following instructions.

- When using a standard audio cable with 3-pin XLR connectors or 6.3φ phone plugs to plug into the MIC IN on the audio mixer or on the amplifier, please turn the Volume Level Control on the receiver to around 1 o'clock position, the output level for balanced and unbalanced output is about at 77mV.

- When using a standard audio cable with 3-pin XLR connectors or 6.3φ phone plugs to plug into the LINE IN on the audio mixer, please turn the Volume Level Control to around MAX. on the receiver position, the output level for balanced and unbalanced output is about at 770mV.

Never use the balanced and unbalanced audio outputs at the same time! This may cause signal loss or increased noise.

- When the MIXING switch is in the OFF position, the XLR output for channels 1 and 2 are separate. When the MIXING switch is in the ON position, the XLR output for channels 1 and 2 are mixed, so that both XLR outputs have combined signal from both channel 1 and channel 2.

7.3 Inserting batteries into the handheld microphone / bodypack transmitter

- Push to open the battery cover and insert batteries into the battery compartment conforming to the polarity (+)(-) marks. The transmitter can not work with incorrectly inserted batteries.
- When push the ON/OFF switch to “ON” to switch the power on, the LED will flash momentarily.

  If the battery has sufficient power, the LED flashes once. If the LED stays on, it indicates that the battery has insufficient power and should be changed soon. If the status LED fails to flash, the battery is either dead or not positioned correctly, and you should correct the positioning or change the battery.
- Close the battery cover.

7.4 Setting up the handheld microphone transmitter

- Switch the receiver power on and check the frequency and volume level.
- Switch the transmitter and hi-fi appliance (amplifier, tape deck etc.) power on.
- Test the microphone and adjust the levels on your audio mixer or amplifier.

7.5 Setting up the bodypack transmitter

A. Connecting a microphone

- Open the battery cover. Push the MIC/LINE switch to “MIC” and use the supplied screwdriver to adjust the GAIN (MIC Adj.) at appropriate position.
- Plug the mini XLR connector of the microphone cable into the audio input connector on the bodypack transmitter.
- Switch the transmitter and hi-fi appliance (amplifier, tape deck etc.) power on.
- Test the microphone and adjust the levels on your audio mixer or amplifier.

B. Connecting an instrument

- Open the battery cover. Push the MIC/LINE switch to “LINE” and use the supplied screwdriver to adjust the GAIN (MIC Adj.) at appropriate position.
- Plug the 6.3φ phone plug of the optional guitar cable to the output jack on the instrument and the mini XLR into audio input connector on the bodypack transmitter.
- Switch the transmitter and hi-fi appliance (amplifier, tape deck etc.) power on.
- Play the instrument for testing and adjust the levels on your audio mixer or amplifier.

8. Trouble-shooting

Problem	Solution
No sound	➢ Check the power supply of the microphone and receiver. ➢ Check that the transmitter and receiver are tuned to the same frequency. ➢ Check whether the hi-fi appliance is switched on and the receiver output is connected to audio mixer or amplifier input. ➢ Check whether transmitter is too far away from receiver or SQUELCH control set too high. ➢ Check whether receiver is located too near metal object or there are obstructions between transmitter and receiver.
Sound interference	➢ Check the antenna location. ➢ When using 2 or above microphone sets simultaneously, make sure that the chosen frequencies are not interfered. ➢ Check whether the interference comes from other wireless microphones, TV, radio and etc.
Distortion	➢ Check the gain control (Mic Adj.) for bodypack transmitter is set too high or too low. ➢ Check whether the interference comes from other wireless microphones, TV, radio and etc.

9. System Feature

- The flexibility and the professional performance are specifically designed for stages, places of worship, and professional sound installations.
- The wireless microphone system with 16- or 64-selectable frequencies via Phase Locked Loop (PLL) circuitry makes it easy to choose non-interfered channels.
- Super high sensitivity, extremely low noise transmission and reception.
- SMT assembled PCB module ensures the quality and stability.

10. System Specification

Receiver

- Carrier Frequency Range : UHF band 682~928MHz
- Oscillator : PLL synthesized, 16-or 64-selectable channels
- Frequency Stability : ±0.005%
- S/N ratio : ＞94dB, at 48KHz deviation and 60dBμV antenna input
- Image and Spurious Rejection : 80 dB minimum
- Receiving Sensitivity : 8 dB μV.
- Selectivity : ＞50dB
- AF Response : 50Hz to 15KHz (±3dB)
- T.H.D. : ＜1% (at 1KHz)
- Modulation Mode : FM
- IF Frequency : 1st: 56MHz; 2nd: 10.7MHz
- Dynamic Range : ＞96dB
- Tone Signal : 32.768KHz
- Audio Output : Unbalanced or/and balanced audio outputs
- Power Supply : 12V DC

Handheld/Bodypack Transmitter

- Carrier Frequency Range : UHF band 682~928MHz
- RF Power Output : 10mW (max.)
- Oscillator : PLL synthesized, 16-or 64-selectable channels
- Frequency Stability : ±0.005%
- Maximum Deviation : ±48KHz
- Spurious Emission :＞60dB below carrier frequency
- T.H.D. : ＜1% (at 1KHz)
- Microphone Cartridge : **Handheld**: uni-directional dynamic or uni-directional electret condenser unit
  Lavalier: uni-directional electret condenser unit
- Tone Key : 32.768KHz
- Operating voltage : DC1.5V x 2 AA size dry or rechargeable batteries
- Current consumption : 65mA ± 5mA