FCC SAR Test Report

Report No.	:	**SA170822C09**
Applicant	:	**NCR**
Address	:	**864 Spring Street NW Atlanta, GA 30308**
Product	:	**5555-01XX**
FCC ID	:	**JEH-5555-01XX**
Brand	:	**NCR**
Model No.	:	**5555-01XX**
Marketing No.	:	**NCR Orderman5 / NCR Orderman5+**
Standards	:	**FCC 47 CFR Part 2 (2.1093), IEEE C95.1:1992, IEEE Std 1528:2013 KDB 865664 D01 v01r04, KDB 865664 D02 v01r02 KDB 248227 D01 v02r02, KDB 447498 D01 v06**
Sample Received Date	:	**Aug. 22, 2017**
Date of Testing	:	**Dec. 25, 2017 ~ Dec. 26, 2017**
Lab Address	:	**No. 47-2, 14th Ling, Chia Pau Vil., Lin Kou Dist., New Taipei City, Taiwan, R.O.C.**
Test Location	:	**No. 19, Hwa Ya 2nd Rd, Wen Hwa Vil, Kwei Shan Dist., Taoyuan City 33383, Taiwan (R.O.C)**

CERTIFICATION: The above equipment have been tested by **Bureau Veritas Consumer Products Services (H.K.) Ltd., Taoyuan Branch – Lin Kou Laboratories**, and found compliance with the requirement of the above standards. The test record, data evaluation & Equipment Under Test (EUT) configurations represented herein are true and accurate accounts of the measurements of the sample's SAR characteristics under the conditions specified in this report. It should not be reproduced except in full, without the written approval of our laboratory. The client should not use it to claim product certification, approval, or endorsement by TAF or any government agencies.

Prepared By : Evonne Liu / Specialist

Approved By : Eli Hsu / Senior Engineer

This report is for your exclusive use. Any copying or replication of this report to or for any other person or entity, or use of our name or trademark, is permitted only with our prior written permission. This report sets forth our findings solely with respect to the test samples identified herein. The results set forth in this report are not indicative or representative of the quality or characteristics of the lot from which a test sample was taken or any similar or identical product unless specifically and expressly noted. Our report includes all of the tests requested by you and the results thereof based upon the information that you provided to us. You have 60 days from date of issuance of this report to notify us of any material error or omission caused by our negligence, provided, however, that such notice shall be in writing and shall specifically address the issue you wish to raise. A failure to raise such issue within the prescribed time shall constitute your unqualified acceptance of the completeness of this report, the tests conducted and the correctness of the report contents. Unless specific mention, the uncertainty of measurement has been explicitly taken into account to declare the compliance or non-compliance to the specification.

Table of Contents

Release Control Record **3**
1. Summary of Maximum SAR Value **4**
2. Description of Equipment Under Test **5**
3. SAR Measurement System **6**
3.1 Definition of Specific Absorption Rate (SAR) 6
3.2 SPEAG DASY52 System 6
3.2.1 Robot 7
3.2.2 Probes 8
3.2.3 Data Acquisition Electronics (DAE) 9
3.2.4 Phantoms 9
3.2.5 Device Holder 10
3.2.6 System Validation Dipoles 10
3.2.7 Tissue Simulating Liquids 11
3.3 SAR System Verification 14
3.4 SAR Measurement Procedure 15
3.4.1 Area & Zoom Scan Procedure 15
3.4.2 Volume Scan Procedure 15
3.4.3 Power Drift Monitoring 16
3.4.4 Spatial Peak SAR Evaluation 16
3.4.5 SAR Averaged Methods 16
4. SAR Measurement Evaluation **17**
4.1 EUT Configuration and Setting 17
4.2 EUT Testing Position 18
4.3 Tissue Verification 20
4.4 System Validation 20
4.5 System Verification 21
4.6 Maximum Output Power 22
4.6.1 Maximum Target Conducted Power 22
4.6.2 Measured Conducted Power Result 22
4.7 SAR Testing Results 24
4.7.1 SAR Test Reduction Considerations 24
4.7.2 SAR Results for Body-worn Exposure Condition (Test Separation Distance is 15 mm) 25
4.7.3 SAR Results for Extremity Exposure Condition (Test Separation Distance is 0 mm) 26
4.7.4 SAR Measurement Variability 27
4.7.5 Simultaneous Multi-band Transmission Evaluation 27
5. Calibration of Test Equipment **29**
6. Measurement Uncertainty **30**
7. Information on the Testing Laboratories **32**

Appendix A. SAR Plots of System Verification
Appendix B. SAR Plots of SAR Measurement
Appendix C. Calibration Certificate for Probe and Dipole
Appendix D. Photographs of EUT and Setup

Release Control Record

Report No.	Reason for Change	Date Issued
SA170822C09	Initial release	Jan. 15, 2018

1. Summary of Maximum SAR Value

Equipment Class	Mode	Highest SAR-1g Body Tested at 15 mm (W/kg)	Highest SAR-10g Extremity Tested at 0 mm (W/kg)
DTS	2.4G WLAN	0.16	0.63
NII	5G WLAN	0.47	0.45
DSS	Bluetooth	0.00	0.00
DXX	NFC / RFID	N/A	N/A
Highest Simultaneous Transmission SAR		Body	Extremity
		0.47	0.45

Note:

1. The SAR criteria **(Head & Body: SAR-1g 1.6 W/kg, and Extremity: SAR-10g 4.0 W/kg)** for general population / uncontrolled exposure is specified in FCC 47 CFR part 2 (2.1093) and ANSI/IEEE C95.1-1992.

2. Description of Equipment Under Test

EUT Type	5555-01XX
FCC ID	JEH-5555-01XX
Brand Name	NCR
Model Name	5555-01XX
Tx Frequency Bands (Unit: MHz)	WLAN : 2412 ~ 2462, 5180 ~ 5240, 5260 ~ 5320, 5500 ~ 5700, 5745 ~ 5825 Bluetooth : 2402 ~ 2480 NFC : 13.56 RFID : 902 ~ 928
Uplink Modulations	802.11b : DSSS 802.11a/g/n : OFDM Bluetooth : GFSK, π/4-DQPSK, 8-DPSK NFC / RFID : ASK
Maximum Tune-up Conducted Power (Unit: dBm)	Please refer to section 4.6.1 of this report
Antenna Type	PIFA Antenna (Peak Antenna Gain : -0.02 dBi for 2.4GHz, 4.73 dBi for 5GHz)
EUT Stage	Production Unit

Note:

1. The above EUT information is declared by manufacturer and for more detailed features description please refers to the manufacturer's specifications or User's Manual.

List of Accessory:

Battery	**Brand Name**	NCR
	Model Name	5555-0105-8801
	Power Rating	3.7Vdc, 3150mAh, 11.65Wh
	Type	Li-ion
LCD Panel	**Brand Name**	Holitech
	Model Name	QDF8504-5.0
BT/WLAN Module	**Brand Name**	USI
	Model Name	WM-BAN-BM-07_S
OSR Module	**Brand Name**	TI
	Model Name	CC1125
NFC Module	**Brand Name**	NXP
	Model Name	NPC100

3. SAR Measurement System

3.1 Definition of Specific Absorption Rate (SAR)

SAR is related to the rate at which energy is absorbed per unit mass in an object exposed to a radio field. The SAR distribution in a biological body is complicated and is usually carried out by experimental techniques or numerical modeling. The standard recommends limits for two tiers of groups, occupational/controlled and general population/uncontrolled, based on a person's awareness and ability to exercise control over his or her exposure. In general, occupational/controlled exposure limits are higher than the limits for general population/uncontrolled.

The SAR definition is the time derivative (rate) of the incremental energy (dW) absorbed by (dissipated in) an incremental mass (dm) contained in a volume element (dv) of a given density (ρ). The equation description is as below:

$$\mathbf{SAR} = \frac{\mathbf{d}}{\mathbf{dt}}\left(\frac{\mathbf{dW}}{\mathbf{dm}}\right) = \frac{\mathbf{d}}{\mathbf{dt}}\left(\frac{\mathbf{dW}}{\boldsymbol{\rho}\mathbf{dv}}\right)$$

SAR is expressed in units of Watts per kilogram (W/kg)

SAR measurement can be related to the electrical field in the tissue by

$$\mathbf{SAR} = \frac{\boldsymbol{\sigma}|\mathbf{E}|^2}{\boldsymbol{\rho}}$$

Where: σ is the conductivity of the tissue, ρ is the mass density of the tissue and E is the RMS electrical field strength.

3.2 SPEAG DASY52 System

DASY52 system consists of high precision robot, probe alignment sensor, phantom, robot controller, controlled measurement server and near-field probe. The robot includes six axes that can move to the precision position of the DASY52 software defined. The DASY52 software can define the area that is detected by the probe. The robot is connected to controlled box. Controlled measurement server is connected to the controlled robot box. The DAE includes amplifier, signal multiplexing, AD converter, offset measurement and surface detection. It is connected to the Electro-optical coupler (ECO). The ECO performs the conversion form the optical into digital electric signal of the DAE and transfers data to the PC.

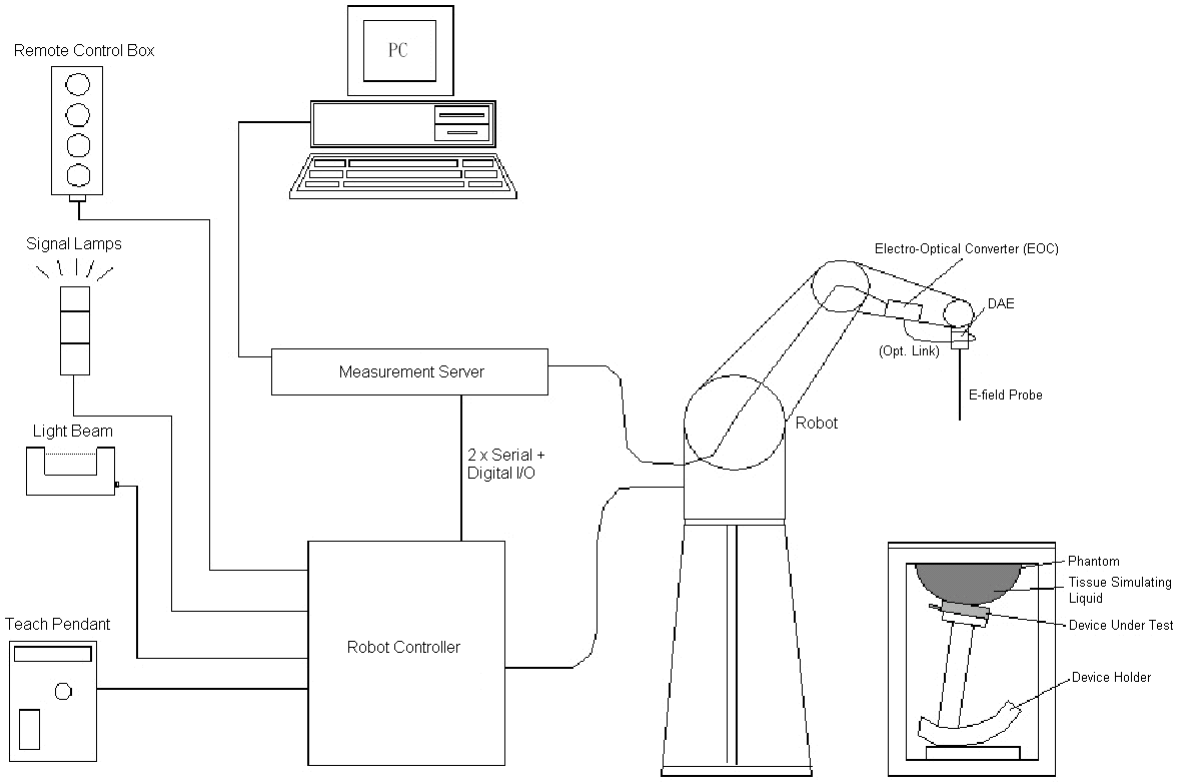

Fig-3.1 SPEAG DASY52 System Setup

3.2.1 Robot

The DASY52 system uses the high precision robots from Stäubli SA (France). For the 6-axis controller system, the robot controller version of CS8c from Stäubli is used. The Stäubli robot series have many features that are important for our application:

- High precision (repeatability ±0.035 mm)
- High reliability (industrial design)
- Jerk-free straight movements
- Low ELF interference (the closed metallic construction shields against motor control fields)

Fig-3.2 SPEAG DASY52 System

3.2.2 Probes

The SAR measurement is conducted with the dosimetric probe. The probe is specially designed and calibrated for use in liquid with high permittivity. The dosimetric probe has special calibration in liquid at different frequency.

Model	EX3DV4	
Construction	Symmetrical design with triangular core. Built-in shielding against static charges. PEEK enclosure material (resistant to organic solvents, e.g., DGBE).	
Frequency	10 MHz to 6 GHz Linearity: ± 0.2 dB	
Directivity	± 0.3 dB in HSL (rotation around probe axis) ± 0.5 dB in tissue material (rotation normal to probe axis)	
Dynamic Range	10 µW/g to 100 mW/g Linearity: ± 0.2 dB (noise: typically < 1 µW/g)	
Dimensions	Overall length: 337 mm (Tip: 20 mm) Tip diameter: 2.5 mm (Body: 12 mm) Typical distance from probe tip to dipole centers: 1 mm	

Model	ES3DV3	
Construction	Symmetrical design with triangular core. Interleaved sensors. Built-in shielding against static charges. PEEK enclosure material (resistant to organic solvents, e.g., DGBE).	
Frequency	10 MHz to 4 GHz Linearity: ± 0.2 dB	
Directivity	± 0.2 dB in HSL (rotation around probe axis) ± 0.3 dB in tissue material (rotation normal to probe axis)	
Dynamic Range	5 µW/g to 100 mW/g Linearity: ± 0.2 dB	
Dimensions	Overall length: 337 mm (Tip: 20 mm) Tip diameter: 3.9 mm (Body: 12 mm) Distance from probe tip to dipole centers: 2.0 mm	

Model	ET3DV6	
Construction	Symmetrical design with triangular core Built-in optical fiber for surface detection system. Built-in shielding against static charges. PEEK enclosure material (resistant to organic solvents, e.g., DGBE)	
Frequency	10 MHz to 2.3 GHz; Linearity: ± 0.2 dB	
Directivity	± 0.2 dB in TSL (rotation around probe axis) ± 0.4 dB in TSL (rotation normal to probe axis)	
Dynamic Range	5 µW/g to 100 mW/g; Linearity: ± 0.2 dB	
Dimensions	Overall length: 337 mm (Tip: 16 mm) Tip diameter: 6.8 mm (Body: 12 mm) Distance from probe tip to dipole centers: 2.7 mm	

3.2.3 Data Acquisition Electronics (DAE)

Model	DAE3, DAE4	
Construction	Signal amplifier, multiplexer, A/D converter and control logic. Serial optical link for communication with DASY embedded system (fully remote controlled). Two step probe touch detector for mechanical surface detection and emergency robot stop.	
Measurement Range	-100 to +300 mV (16 bit resolution and two range settings: 4mV, 400mV)	
Input Offset Voltage	< 5µV (with auto zero)	
Input Bias Current	< 50 fA	
Dimensions	60 x 60 x 68 mm	

3.2.4 Phantoms

Model	Twin SAM	
Construction	The shell corresponds to the specifications of the Specific Anthropomorphic Mannequin (SAM) phantom defined in IEEE 1528 and IEC 62209-1. It enables the dosimetric evaluation of left and right hand phone usage as well as body mounted usage at the flat phantom region. A cover prevents evaporation of the liquid. Reference markings on the phantom allow the complete setup of all predefined phantom positions and measurement grids by teaching three points with the robot.	
Material	Vinylester, glass fiber reinforced (VE-GF)	
Shell Thickness	2 ± 0.2 mm (6 ± 0.2 mm at ear point)	
Dimensions	Length: 1000 mm Width: 500 mm Height: adjustable feet	
Filling Volume	approx. 25 liters	

Model	ELI	
Construction	Phantom for compliance testing of handheld and body-mounted wireless devices in the frequency range of 30 MHz to 6 GHz. ELI is fully compatible with the IEC 62209-2 standard and all known tissue simulating liquids. ELI has been optimized regarding its performance and can be integrated into our standard phantom tables. A cover prevents evaporation of the liquid. Reference markings on the phantom allow installation of the complete setup, including all predefined phantom positions and measurement grids, by teaching three points. The phantom is compatible with all SPEAG dosimetric probes and dipoles.	
Material	Vinylester, glass fiber reinforced (VE-GF)	
Shell Thickness	2.0 ± 0.2 mm (bottom plate)	
Dimensions	Major axis: 600 mm Minor axis: 400 mm	
Filling Volume	approx. 30 liters	

3.2.5 Device Holder

Model	Mounting Device	
Construction	In combination with the Twin SAM Phantom or ELI4, the Mounting Device enables the rotation of the mounted transmitter device in spherical coordinates. Rotation point is the ear opening point. Transmitter devices can be easily and accurately positioned according to IEC, IEEE, FCC or other specifications. The device holder can be locked for positioning at different phantom sections (left head, right head, flat).	
Material	POM	

Model	Laptop Extensions Kit	
Construction	Simple but effective and easy-to-use extension for Mounting Device that facilitates the testing of larger devices according to IEC 62209-2 (e.g., laptops, cameras, etc.). It is lightweight and fits easily on the upper part of the Mounting Device in place of the phone positioner.	
Material	POM, Acrylic glass, Foam	

3.2.6 System Validation Dipoles

Model	D-Serial	
Construction	Symmetrical dipole with l/4 balun. Enables measurement of feed point impedance with NWA. Matched for use near flat phantoms filled with tissue simulating solutions.	
Frequency	750 MHz to 5800 MHz	
Return Loss	> 20 dB	
Power Capability	> 100 W (f < 1GHz), > 40 W (f > 1GHz)	

3.2.7 Tissue Simulating Liquids

For SAR measurement of the field distribution inside the phantom, the phantom must be filled with homogeneous tissue simulating liquid to a depth of at least 15 cm. For head SAR testing, the liquid height from the ear reference point (ERP) of the phantom to the liquid top surface is larger than 15 cm. For body SAR testing, the liquid height from the center of the flat phantom to the liquid top surface is larger than 15 cm. The nominal dielectric values of the tissue simulating liquids in the phantom and the tolerance of 5% are listed in Table-3.1.

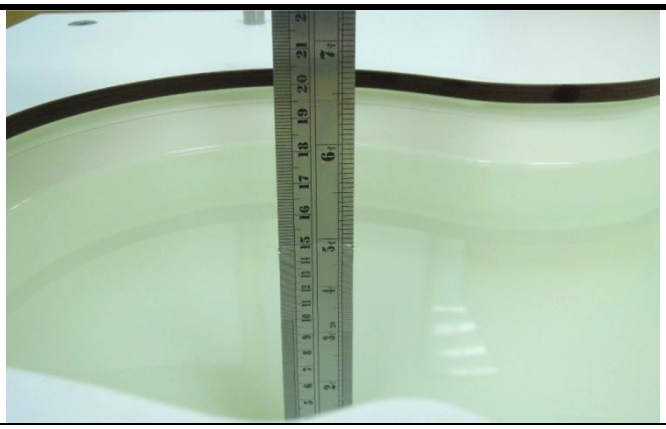	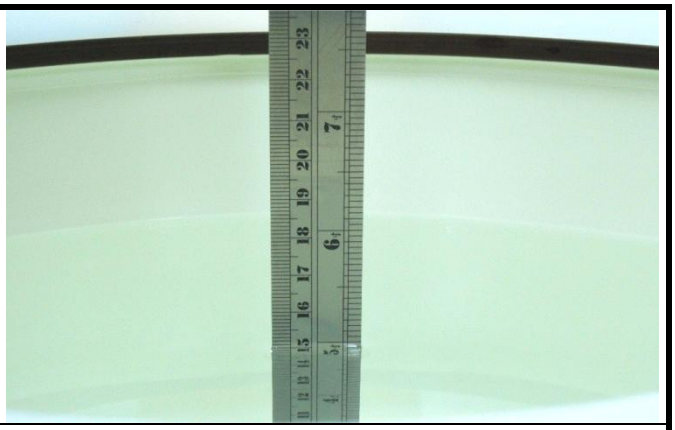
Photo of Liquid Height for Head Position	**Photo of Liquid Height for Body Position**

The dielectric properties of the head tissue simulating liquids are defined in IEEE 1528 and IEC 62209-1. For the body tissue simulating liquids, the dielectric properties are defined in RSS-102 Annex D and IEC 62209-2. The dielectric properties of the tissue simulating liquids were verified prior to the SAR evaluation using a dielectric assessment kit and a network analyzer.

Table-3.1 Targets of Tissue Simulating Liquid

Frequency (MHz)	Target Permittivity	Range of ±5%	Target Conductivity	Range of ±5%
For Head				
750	41.9	39.8 ~ 44.0	0.89	0.85 ~ 0.93
835	41.5	39.4 ~ 43.6	0.90	0.86 ~ 0.95
900	41.5	39.4 ~ 43.6	0.97	0.92 ~ 1.02
1450	40.5	38.5 ~ 42.5	1.20	1.14 ~ 1.26
1640	40.3	38.3 ~ 42.3	1.29	1.23 ~ 1.35
1750	40.1	38.1 ~ 42.1	1.37	1.30 ~ 1.44
1800	40.0	38.0 ~ 42.0	1.40	1.33 ~ 1.47
1900	40.0	38.0 ~ 42.0	1.40	1.33 ~ 1.47
2000	40.0	38.0 ~ 42.0	1.40	1.33 ~ 1.47
2300	39.5	37.5 ~ 41.5	1.67	1.59 ~ 1.75
2450	39.2	37.2 ~ 41.2	1.80	1.71 ~ 1.89
2600	39.0	37.1 ~ 41.0	1.96	1.86 ~ 2.06
3500	37.9	36.0 ~ 39.8	2.91	2.76 ~ 3.06
5200	36.0	34.2 ~ 37.8	4.66	4.43 ~ 4.89
5300	35.9	34.1 ~ 37.7	4.76	4.52 ~ 5.00
5500	35.6	33.8 ~ 37.4	4.96	4.71 ~ 5.21
5600	35.5	33.7 ~ 37.3	5.07	4.82 ~ 5.32
5800	35.3	33.5 ~ 37.1	5.27	5.01 ~ 5.53
For Body				
750	55.5	52.7 ~ 58.3	0.96	0.91 ~ 1.01
835	55.2	52.4 ~ 58.0	0.97	0.92 ~ 1.02
900	55.0	52.3 ~ 57.8	1.05	1.00 ~ 1.10
1450	54.0	51.3 ~ 56.7	1.30	1.24 ~ 1.37
1640	53.8	51.1 ~ 56.5	1.40	1.33 ~ 1.47
1750	53.4	50.7 ~ 56.1	1.49	1.42 ~ 1.56
1800	53.3	50.6 ~ 56.0	1.52	1.44 ~ 1.60
1900	53.3	50.6 ~ 56.0	1.52	1.44 ~ 1.60
2000	53.3	50.6 ~ 56.0	1.52	1.44 ~ 1.60
2300	52.9	50.3 ~ 55.5	1.81	1.72 ~ 1.90
2450	52.7	50.1 ~ 55.3	1.95	1.85 ~ 2.05
2600	52.5	49.9 ~ 55.1	2.16	2.05 ~ 2.27
3500	51.3	48.7 ~ 53.9	3.31	3.14 ~ 3.48
5200	49.0	46.6 ~ 51.5	5.30	5.04 ~ 5.57
5300	48.9	46.5 ~ 51.3	5.42	5.15 ~ 5.69
5500	48.6	46.2 ~ 51.0	5.65	5.37 ~ 5.93
5600	48.5	46.1 ~ 50.9	5.77	5.48 ~ 6.06
5800	48.2	45.8 ~ 50.6	6.00	5.70 ~ 6.30

The following table gives the recipes for tissue simulating liquids.

Table-3.2 Recipes of Tissue Simulating Liquid

Tissue Type	Bactericide	DGBE	HEC	NaCl	Sucrose	Triton X-100	Water	Diethylene Glycol Mono-hexylether
H750	0.2	-	0.2	1.5	56.0	-	42.1	-
H835	0.2	-	0.2	1.5	57.0	-	41.1	-
H900	0.2	-	0.2	1.4	58.0	-	40.2	-
H1450	-	43.3	-	0.6	-	-	56.1	-
H1640	-	45.8	-	0.5	-	-	53.7	-
H1750	-	47.0	-	0.4	-	-	52.6	-
H1800	-	44.5	-	0.3	-	-	55.2	-
H1900	-	44.5	-	0.2	-	-	55.3	-
H2000	-	44.5	-	0.1	-	-	55.4	-
H2300	-	44.9	-	0.1	-	-	55.0	-
H2450	-	45.0	-	0.1	-	-	54.9	-
H2600	-	45.1	-	0.1	-	-	54.8	-
H3500	-	8.0	-	0.2	-	20.0	71.8	-
H5G	-	-	-	-	-	17.2	65.5	17.3
B750	0.2	-	0.2	0.8	48.8	-	50.0	-
B835	0.2	-	0.2	0.9	48.5	-	50.2	-
B900	0.2	-	0.2	0.9	48.2	-	50.5	-
B1450	-	34.0	-	0.3	-	-	65.7	-
B1640	-	32.5	-	0.3	-	-	67.2	-
B1750	-	31.0	-	0.2	-	-	68.8	-
B1800	-	29.5	-	0.4	-	-	70.1	-
B1900	-	29.5	-	0.3	-	-	70.2	-
B2000	-	30.0	-	0.2	-	-	69.8	-
B2300	-	31.0	-	0.1	-	-	68.9	-
B2450	-	31.4	-	0.1	-	-	68.5	-
B2600	-	31.8	-	0.1	-	-	68.1	-
B3500	-	28.8	-	0.1	-	-	71.1	-
B5G	-	-	-	-	-	10.7	78.6	10.7

3.3 SAR System Verification

The system check verifies that the system operates within its specifications. It is performed daily or before every SAR measurement. The system check uses normal SAR measurements in the flat section of the phantom with a matched dipole at a specified distance. The system verification setup is shown as below.

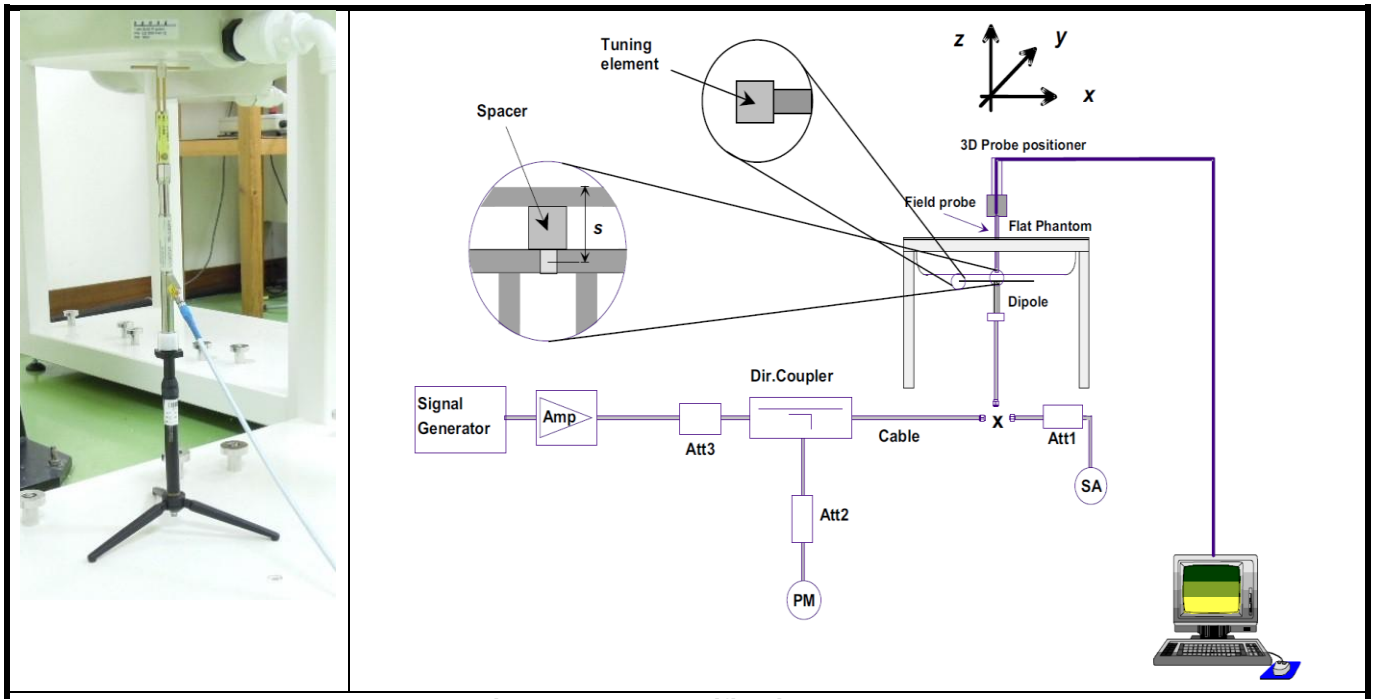

Fig-3.3 System Verification Setup

The validation dipole is placed beneath the flat phantom with the specific spacer in place. The distance spacer is touch the phantom surface with a light pressure at the reference marking and be oriented parallel to the long side of the phantom. The spectrum analyzer measures the forward power at the location of the system check dipole connector. The signal generator is adjusted for the desired forward power (250 mW is used for 700 MHz to 3 GHz, 100 mW is used for 3.5 GHz to 6 GHz) at the dipole connector and the power meter is read at that level. After connecting the cable to the dipole, the signal generator is readjusted for the same reading at power meter.

After system check testing, the SAR result will be normalized to 1W forward input power and compared with the reference SAR value derived from validation dipole certificate report. The deviation of system check should be within 10 %.

3.4 SAR Measurement Procedure

According to the SAR test standard, the recommended procedure for assessing the peak spatial-average SAR value consists of the following steps:

(a) Power reference measurement
(b) Area scan
(c) Zoom scan
(d) Power drift measurement

The SAR measurement procedures for each of test conditions are as follows:

(a) Make EUT to transmit maximum output power
(b) Measure conducted output power through RF cable
(c) Place the EUT in the specific position of phantom
(d) Perform SAR testing steps on the DASY system
(e) Record the SAR value

3.4.1 Area & Zoom Scan Procedure

First Area Scan is used to locate the approximate location(s) of the local peak SAR value(s). The measurement grid within an Area Scan is defined by the grid extent, grid step size and grid offset. Next, in order to determine the EM field distribution in a three-dimensional spatial extension, Zoom Scan is required. The Zoom Scan is performed around the highest E-field value to determine the averaged SAR-distribution over 10 g. According to KDB 865664 D01, the resolution for Area and Zoom scan is specified in the table below.

Items	<= 2 GHz	2-3 GHz	3-4 GHz	4-5 GHz	5-6 GHz
Area Scan (Δx, Δy)	<= 15 mm	<= 12 mm	<= 12 mm	<= 10 mm	<= 10 mm
Zoom Scan (Δx, Δy)	<= 8 mm	<= 5 mm	<= 5 mm	<= 4 mm	<= 4 mm
Zoom Scan (Δz)	<= 5 mm	<= 5 mm	<= 4 mm	<= 3 mm	<= 2 mm
Zoom Scan Volume	>= 30 mm	>= 30 mm	>= 28 mm	>= 25 mm	>= 22 mm

Note:

When zoom scan is required and report SAR is <= 1.4 W/kg, the zoom scan resolution of Δx / Δy (2-3GHz: <= 8 mm, 3-4GHz: <= 7 mm, 4-6GHz: <= 5 mm) may be applied.

3.4.2 Volume Scan Procedure

The volume scan is used for assess overlapping SAR distributions for antennas transmitting in different frequency bands. It is equivalent to an oversized zoom scan used in standalone measurements. The measurement volume will be used to enclose all the simultaneous transmitting antennas. For antennas transmitting simultaneously in different frequency bands, the volume scan is measured separately in each frequency band. In order to sum correctly to compute the 1g aggregate SAR, the EUT remain in the same test position for all measurements and all volume scan use the same spatial resolution and grid spacing. When all volume scan were completed, the software, SEMCAD postprocessor can combine and subsequently superpose these measurement data to calculating the multiband SAR.

3.4.3 Power Drift Monitoring

All SAR testing is under the EUT install full charged battery and transmit maximum output power. In DASY measurement software, the power reference measurement and power drift measurement procedures are used for monitoring the power drift of EUT during SAR test. Both these procedures measure the field at a specified reference position before and after the SAR testing. The software will calculate the field difference in dB. If the power drift more than 5%, the SAR will be retested.

3.4.4 Spatial Peak SAR Evaluation

The procedure for spatial peak SAR evaluation has been implemented according to the test standard. It can be conducted for 1g and 10g, as well as for user-specific masses. The DASY software includes all numerical procedures necessary to evaluate the spatial peak SAR value.

The base for the evaluation is a "cube" measurement. The measured volume must include the 1g and 10g cubes with the highest averaged SAR values. For that purpose, the center of the measured volume is aligned to the interpolated peak SAR value of a previously performed area scan.

The entire evaluation of the spatial peak values is performed within the post-processing engine (SEMCAD). The system always gives the maximum values for the 1g and 10g cubes. The algorithm to find the cube with highest averaged SAR is divided into the following stages:

(a) Extraction of the measured data (grid and values) from the Zoom Scan
(b) Calculation of the SAR value at every measurement point based on all stored data (A/D values and measurement parameters)
(c) Generation of a high-resolution mesh within the measured volume
(d) Interpolation of all measured values form the measurement grid to the high-resolution grid
(e) Extrapolation of the entire 3-D field distribution to the phantom surface over the distance from sensor to surface
(f) Calculation of the averaged SAR within masses of 1g and 10g

3.4.5 SAR Averaged Methods

In DASY, the interpolation and extrapolation are both based on the modified Quadratic Shepard’s method. The interpolation scheme combines a least-square fitted function method and a weighted average method which are the two basic types of computational interpolation and approximation.

Extrapolation routines are used to obtain SAR values between the lowest measurement points and the inner phantom surface. The extrapolation distance is determined by the surface detection distance and the probe sensor offset. The uncertainty increases with the extrapolation distance. To keep the uncertainty within 1% for the 1 g and 10 g cubes, the extrapolation distance should not be larger than 5 mm.

4. SAR Measurement Evaluation

4.1 EUT Configuration and Setting

<Considerations Related to WLAN for Setup and Testing>

In general, various vendor specific external test software and chipset based internal test modes are typically used for SAR measurement. These chipset based test mode utilities are generally hardware and manufacturer dependent, and often include substantial flexibility to reconfigure or reprogram a device. A Wi-Fi device must be configured to transmit continuously at the required data rate, channel bandwidth and signal modulation, using the highest transmission duty factor supported by the test mode tools for SAR measurement. The test frequencies established using test mode must correspond to the actual channel frequencies. When 802.11 frame gaps are accounted for in the transmission, a maximum transmission duty factor of 92 - 96% is typically achievable in most test mode configurations. A minimum transmission duty factor of 85% is required to avoid certain hardware and device implementation issues related to wide range SAR scaling. In addition, a periodic transmission duty factor is required for current generation SAR systems to measure SAR correctly. The reported SAR must be scaled to 100% transmission duty factor to determine compliance at the maximum tune-up tolerance limit.

According to KDB 248227 D01, this device has installed WLAN engineering testing software which can provide continuous transmitting RF signal. During WLAN SAR testing, this device was operated to transmit continuously at the maximum transmission duty with specified transmission mode, operating frequency, lowest data rate, and maximum output power.

Initial Test Configuration

An initial test configuration is determined for OFDM transmission modes in 2.4 GHz and 5 GHz bands according to the channel bandwidth, modulation and data rate combination(s) with the highest maximum output power specified for production units in each standalone and aggregated frequency band. When the same maximum power is specified for multiple transmission modes in a frequency band, the largest channel bandwidth, lowest order modulation, lowest data rate and lowest order 802.11a/g/n/ac mode is used for SAR measurement, on the highest measured output power channel in the initial test configuration, for each frequency band.

Subsequent Test Configuration

SAR measurement requirements for the remaining 802.11 transmission mode configurations that have not been tested in the initial test configuration are determined separately for each standalone and aggregated frequency band, in each exposure condition, according to the maximum output power specified for production units. Additional power measurements may be required to determine if SAR measurements are required for subsequent highest output power channels in a subsequent test configuration. When the highest reported SAR for the initial test configuration according to the initial test position or fixed exposure position requirements, is adjusted by the ratio of the subsequent test configuration to initial test configuration specified maximum output power and the adjusted SAR is ≤ 1.2 W/kg, SAR is not required for that subsequent test configuration.

SAR Test Configuration and Channel Selection

When multiple channel bandwidth configurations in a frequency band have the same specified maximum output power, the initial test configuration is using largest channel bandwidth, lowest order modulation, lowest data rate, and lowest order 802.11 mode (i.e., 802.11a is chosen over 802.11n then 802.11ac or 802.11g is chosen over 802.11n). After an initial test configuration is determined, if multiple test channels have the same measured maximum output power, the channel chosen for SAR measurement is determined according to the following.

1) The channel closest to mid-band frequency is selected for SAR measurement.

2) For channels with equal separation from mid-band frequency; for example, high and low channels or two mid-band channels, the higher frequency (number) channel is selected for SAR measurement.

Test Reduction for U-NII-1 (5.2 GHz) and U-NII-2A (5.3 GHz) Bands

For devices that operate in both U-NII bands using the same transmitter and antenna(s), SAR test reduction is determined according to the following.

1) When the same maximum output power is specified for both bands, begin SAR measurement in U-NII-2A band by applying the OFDM SAR requirements. If the highest reported SAR for a test configuration is ≤ 1.2 W/kg, SAR is not required for U-NII-1 band for that configuration (802.11 mode and exposure condition).

2) When different maximum output power is specified for the bands, begin SAR measurement in the band with higher specified maximum output power. The highest reported SAR for the tested configuration is adjusted by the ratio of lower to higher specified maximum output power for the two bands. When the adjusted SAR is ≤ 1.2 W/kg, SAR is not required for the band with lower maximum output power in that test configuration.

<Considerations Related to Bluetooth for Setup and Testing>

This device has installed Bluetooth engineering testing software which can provide continuous transmitting RF signal. During Bluetooth SAR testing, this device was operated to transmit continuously at the maximum transmission duty with specified transmission mode, operating frequency, lowest data rate, and maximum output power.

4.2 EUT Testing Position

This EUT was tested in Front Face and Rear Face of EUT with phantom 1.5 cm gap for Body SAR. Extremity SAR evaluation was tested in Rear Face, Left Side, and Right Side of the EUT with phantom 0 cm gap.

4.2.1 SAR Test Exclusion Evaluations

According to KDB 447498 D01, the SAR test exclusion condition is based on source-based time-averaged maximum conducted output power, adjusted for tune-up tolerance, and the minimum test separation distance required for the exposure conditions. The SAR exclusion threshold is determined by the following formula.

1. For the test separation distance <= 50 mm

$$\frac{\textbf{Max. Tune up Power}_{(mW)}}{\textbf{Min. Test Separation Distance}_{(mm)}} \times \sqrt{f_{(GHz)}} \leq 3.0 \text{ for SAR-1g, } \leq 7.5 \text{ for SAR-10g}$$

When the minimum test separation distance is < 5 mm, a distance of 5 mm is applied to determine SAR test exclusion.

2. For the test separation distance > 50 mm, and the frequency at 100 MHz to 1500 MHz

$$\left[(\text{Threshold at 50 mm in Step 1}) + (\text{Test Separation Distance} - 50\text{ mm}) \times \left(\frac{f_{(MHz)}}{150}\right)\right]_{(mW)}$$

3. For the test separation distance > 50 mm, and the frequency at > 1500 MHz to 6 GHz

$$[(\text{Threshold at 50 mm in Step 1}) + (\text{Test Separation Distance} - 50\text{ mm}) \times 10]_{(mW)}$$

<For RFID>

Mode	Max. Tune-up Power (dBm)	Max. Tune-up Power (mW)	Rear Face			Left Side			Right Side			Top Side			Bottom Side		
			Ant. to Surface (mm)	Calculated Result	Require SAR Testing?	Ant. to Surface (mm)	Calculated Result	Require SAR Testing?	Ant. to Surface (mm)	Calculated Result	Require SAR Testing?	Ant. to Surface (mm)	Calculated Result	Require SAR Testing?	Ant. to Surface (mm)	Calculated Result	Require SAR Testing?
RFID	3	2	5	0.38	No	10	0.19	No	13.5	0.14	No	10	0.19	No	100	462	No

Note:

1. When separation distance <= 50 mm and the calculated result shown in above table is <= 3.0 for SAR-1g exposure condition, or <= 7.5 for SAR-10g exposure condition, the SAR testing exclusion is applied.
2. When separation distance > 50 mm and the device output power is less than the calculated result (power threshold, mW) shown in above table, the SAR testing exclusion is applied.

4.3 Tissue Verification

The measuring results for tissue simulating liquid are shown as below.

Test Date	Tissue Type	Frequency (MHz)	Liquid Temp. (℃)	Measured Conductivity (σ)	Measured Permittivity (ε_r)	Target Conductivity (σ)	Target Permittivity (ε_r)	Conductivity Deviation (%)	Permittivity Deviation (%)
Dec. 26, 2017	Body	2450	23.4	1.947	50.873	1.95	52.7	-0.15	-3.47
Dec. 25, 2017	Body	5250	23.6	5.29	50.923	5.36	48.9	-1.31	4.14
Dec. 25, 2017	Body	5600	23.6	5.884	50.283	5.77	48.5	1.98	3.68
Dec. 25, 2017	Body	5800	23.6	6.185	49.782	6	48.2	3.08	3.28
Dec. 26, 2017	Extremity	2450	23.4	1.947	50.873	1.95	52.7	-0.15	-3.47
Dec. 25, 2017	Extremity	5250	23.6	5.29	50.923	5.36	48.9	-1.31	4.14
Dec. 25, 2017	Extremity	5600	23.6	5.884	50.283	5.77	48.5	1.98	3.68
Dec. 26, 2017	Extremity	5800	23.4	6.027	50.022	6	48.2	0.45	3.78

Note:
The dielectric properties of the tissue simulating liquid must be measured within 24 hours before the SAR testing and within ±5% of the target values. Liquid temperature during the SAR testing must be within ±2 ℃.

4.4 System Validation

The SAR measurement system was validated according to procedures in KDB 865664 D01. The validation status in tabulated summary is as below.

Test Date	Probe S/N	Calibration Point		Measured Conductivity (σ)	Measured Permittivity (ε_r)	Validation for CW			Validation for Modulation		
						Sensitivity Range	Probe Linearity	Probe Isotropy	Modulation Type	Duty Factor	PAR
Dec. 26, 2017	3971	Body	2450	1.947	50.873	Pass	Pass	Pass	OFDM	N/A	Pass
Dec. 25, 2017	3971	Body	5250	5.29	50.923	Pass	Pass	Pass	OFDM	N/A	Pass
Dec. 25, 2017	3971	Body	5600	5.884	50.283	Pass	Pass	Pass	OFDM	N/A	Pass
Dec. 25, 2017	3971	Body	5800	6.185	49.782	Pass	Pass	Pass	OFDM	N/A	Pass
Dec. 26, 2017	3971	Extremity	2450	1.947	50.873	Pass	Pass	Pass	OFDM	N/A	Pass
Dec. 25, 2017	3971	Extremity	5250	5.29	50.923	Pass	Pass	Pass	OFDM	N/A	Pass
Dec. 25, 2017	3971	Extremity	5600	5.884	50.283	Pass	Pass	Pass	OFDM	N/A	Pass
Dec. 26, 2017	3971	Extremity	5800	6.027	50.022	Pass	Pass	Pass	OFDM	N/A	Pass

4.5 System Verification

The measuring result for system verification is tabulated as below.

Test Date	Mode	Frequency (MHz)	1W Target SAR-1g (W/kg)	Measured SAR-1g (W/kg)	Normalized to 1W SAR-1g (W/kg)	Deviation (%)	Dipole S/N	Probe S/N	DAE S/N
Dec. 26, 2017	Body	2450	12.40	49.60	49.70	-0.20	737	3971	861
Dec. 25, 2017	Body	5250	7.21	72.10	76.50	-5.75	1019	3971	861
Dec. 25, 2017	Body	5600	7.79	77.90	79.70	-2.26	1019	3971	861
Dec. 25, 2017	Body	5800	7.93	79.30	76.90	3.12	1019	3971	861

Test Date	Mode	Frequency (MHz)	1W Target SAR-10g (W/kg)	Measured SAR-10g (W/kg)	Normalized to 1W SAR-1g (W/kg)	Deviation (%)	Dipole S/N	Probe S/N	DAE S/N
Dec. 26, 2017	Extremity	2450	5.73	22.92	23.40	-2.05	737	3971	861
Dec. 25, 2017	Extremity	5250	1.97	19.70	21.30	-7.51	1019	3971	861
Dec. 25, 2017	Extremity	5600	2.17	21.70	22.30	-2.69	1019	3971	861
Dec. 26, 2017	Extremity	5800	2.26	22.60	21.30	6.10	1019	3971	861

Note:

Comparing to the reference SAR value provided by SPEAG, the validation data should be within its specification of 10 %. The result indicates the system check can meet the variation criterion and the plots can be referred to Appendix A of this report.

4.6 Maximum Output Power

4.6.1 Maximum Target Conducted Power

The maximum conducted average power (Unit: dBm) including tune-up tolerance is shown as below.

Mode	2.4G WLAN	5.2G WLAN	5.3G WLAN	5.6G WLAN	5.8G WLAN
802.11b	17.0	N/A	N/A	N/A	N/A
802.11g	13.0	N/A	N/A	N/A	N/A
802.11a	N/A	13.0	13.0	13.0	12.5
802.11n HT20	12.0	12.0	12.0	12.0	11.5

Mode	2.4G Bluetooth
Bluetooth DH	0
Bluetooth LE	0

Mode	RFID	
RFID	2-GFSK	902.4 MHz :-1.5 915.0 MHz:-1.0 927.525MHz:3.0
	4-GFSK	902.3 MHz :-1.5 903.7 MHz:0.5 905.2MHz:-1.0

4.6.2 Measured Conducted Power Result

The measuring conducted average power (Unit: dBm) is shown as below.

<WLAN 2.4G>

Mode	Channel	Frequency (MHz)	Average Power
802.11b	1	2412	16.78
	6	2437	**16.87**
	11	2462	16.75

<WLAN 5.3G>

Mode	Channel	Frequency (MHz)	Average Power
802.11a	52	5260	12.68
	56	5280	**12.89**
	60	5300	12.76
	64	5320	12.84

<WLAN 5.6G>

Mode	Channel	Frequency (MHz)	Average Power
802.11a	100	5500	**12.92**
	116	5580	12.87
	120	5600	12.77
	124	5620	12.64
	132	5660	12.67
	140	5700	12.69

<WLAN 5.8G>

Mode	Channel	Frequency (MHz)	Average Power
802.11a	149	5745	12.15
	153	5765	12.19
	157	5785	**12.2**
	161	5805	12.18
	165	5825	12.1

<Bluetooth>

Mode	Channel	Frequency (MHz)	Average Power
Bluetooth EDR	0	2402	-1.02
	39	2441	-0.14
	78	2480	-0.51
Bluetooth LE	0	2402	-1.03
	19	2440	**-0.11**
	39	2480	-0.43

<RFID>

Mode	Mode	Data Rate	Frequency (MHz)	Average Power
RFID	2-GFSK	64K bit/s	902.4	-1.95
			915	0.67
			927.525	2.78
	4-GFSK	9.6K bit/s	902.3	-1.73
			903.7	0.14
			905.2	-1.37

4.7 SAR Testing Results

4.7.1 SAR Test Reduction Considerations

<KDB 447498 D01, General RF Exposure Guidance>

Testing of other required channels within the operating mode of a frequency band is not required when the reported SAR for the mid-band or highest output power channel is:

(1) ≤ 0.8 W/kg or 2.0 W/kg, for 1-g or 10-g respectively, when the transmission band is ≤ 100 MHz

(2) ≤ 0.6 W/kg or 1.5 W/kg, for 1-g or 10-g respectively, when the transmission band is between 100 MHz and 200 MHz

(3) ≤ 0.4 W/kg or 1.0 W/kg, for 1-g or 10-g respectively, when the transmission band is ≥ 200 MHz

<KDB 248227 D01, SAR Guidance for Wi-Fi Transmitters>

(1) For handsets operating next to ear, hotspot mode or mini-tablet configurations, the initial test position procedures were applied. The test position with the highest extrapolated peak SAR will be used as the initial test position. When the reported SAR of initial test position is <= 0.4 W/kg, SAR testing for remaining test positions is not required. Otherwise, SAR is evaluated at the subsequent highest peak SAR positions until the reported SAR result is <= 0.8 W/kg or all test positions are measured.

(2) For WLAN 2.4 GHz, the highest measured maximum output power channel for DSSS was selected for SAR measurement. When the reported SAR is <= 0.8 W/kg, no further SAR testing is required. Otherwise, SAR is evaluated at the next highest measured output power channel. When any reported SAR is > 1.2 W/kg, SAR is required for the third channel. For OFDM modes (802.11g/n), SAR is not required when the highest reported SAR for DSSS is adjusted by the ratio of OFDM to DSSS specified maximum output power and it is <= 1.2 W/kg.

(3) For WLAN 5 GHz, the initial test configuration was selected according to the transmission mode with the highest maximum output power. When the reported SAR of initial test configuration is > 0.8 W/kg, SAR is required for the subsequent highest measured output power channel until the reported SAR result is <= 1.2 W/kg or all required channels are measured. For other transmission modes, SAR is not required when the highest reported SAR for initial test configuration is adjusted by the ratio of subsequent test configuration to initial test configuration specified maximum output power and it is <= 1.2 W/kg.

4.7.2 SAR Results for Body-worn Exposure Condition (Test Separation Distance is 15 mm)

Plot No.	Band	Mode	Test Position	Ch.	Max. Tune-up Power (dBm)	Measured Conducted Power (dBm)	Scaling Factor	Power Drift (dB)	Measured SAR-1g (W/kg)	Scaled SAR-1g (W/kg)
	WLAN2.4G	802.11b	Front Face	6	17.0	16.87	1.03	0.06	0.001	0.00
01	WLAN2.4G	802.11b	Rear Face	6	17.0	16.87	1.03	-0.07	0.157	**0.16**
	WLAN2.4G	802.11b	Rear Face	1	17.0	16.78	1.05	0.01	0.145	0.15
	WLAN2.4G	802.11b	Rear Face	11	17.0	16.75	1.06	0.03	0.142	0.15
	WLAN5G	802.11a	Front Face	56	13.0	12.89	1.03	0.00	0.001	0.00
02	WLAN5G	802.11a	Rear Face	56	13.0	12.89	1.03	0.12	0.329	**0.34**
	WLAN5G	802.11a	Rear Face	52	13.0	12.68	1.08	0.02	0.287	0.31
	WLAN5G	802.11a	Rear Face	60	13.0	12.76	1.06	-0.06	0.298	0.31
	WLAN5G	802.11a	Rear Face	64	13.0	12.84	1.04	0.07	0.314	0.33
	WLAN5G	802.11a	Front Face	100	13.0	12.92	1.02	0.00	0.001	0.00
03	WLAN5G	802.11a	Rear Face	100	13.0	12.92	1.02	-0.04	0.459	**0.47**
	WLAN5G	802.11a	Rear Face	116	13.0	12.87	1.03	-0.01	0.446	0.46
	WLAN5G	802.11a	Rear Face	120	13.0	12.77	1.05	0.09	0.438	0.46
	WLAN5G	802.11a	Rear Face	124	13.0	12.64	1.09	0.14	0.411	0.45
	WLAN5G	802.11a	Rear Face	132	13.0	12.67	1.08	-0.02	0.426	0.46
	WLAN5G	802.11a	Rear Face	140	13.0	12.69	1.07	0.05	0.424	0.46
	WLAN5G	802.11a	Front Face	157	12.5	12.20	1.07	0.00	0.001	0.00
04	WLAN5G	802.11a	Rear Face	157	12.5	12.20	1.07	0.07	0.207	**0.22**
	WLAN5G	802.11a	Rear Face	149	12.5	12.15	1.08	0.01	0.192	0.21
	WLAN5G	802.11a	Rear Face	153	12.5	12.19	1.07	-0.05	0.185	0.20
	WLAN5G	802.11a	Rear Face	161	12.5	12.18	1.08	0.08	0.194	0.21
	WLAN5G	802.11a	Rear Face	165	12.5	12.10	1.10	0.12	0.182	0.20

Note: The "< 0.001" means there is no SAR value or the SAR is too low to be measured.

Plot No.	Band	Mode	Test Position	Ch.	Max. Tune-up Power (dBm)	Measured Conducted Power (dBm)	Scaling Factor	Power Drift (dB)	Measured SAR-1g (W/kg)	Scaled SAR-1g (W/kg)
	BT	LE	Front Face	19	0.0	-0.11	1.03	0.05	0.001	0.00
	BT	LE	Rear Face	19	0.0	-0.11	1.03	0.02	0.001	0.00
	BT	LE	Rear Face	0	0.0	-1.03	1.27	0.00	0.001	0.00
	BT	LE	Rear Face	39	0.0	-0.43	1.10	0.00	0.001	0.00

Note: The "< 0.001" means there is no SAR value or the SAR is too low to be measured.

4.7.3 SAR Results for Extremity Exposure Condition (Test Separation Distance is 0 mm)

Plot No.	Band	Mode	Test Position	Ch.	Max. Tune-up Power (dBm)	Measured Conducted Power (dBm)	Scaling Factor	Power Drift (dB)	Measured SAR-10g (W/kg)	Scaled SAR-10g (W/kg)
05	WLAN2.4G	802.11b	Rear Face	6	17.0	16.87	1.03	0.08	0.616	**0.63**
	WLAN2.4G	802.11b	Left Side	6	17.0	16.87	1.03	0.03	0.082	0.08
	WLAN2.4G	802.11b	Right Side	6	17.0	16.87	1.03	-0.05	0.05	0.05
	WLAN2.4G	802.11b	Rear Face	1	17.0	16.78	1.05	0.09	0.586	0.62
	WLAN2.4G	802.11b	Rear Face	11	17.0	16.75	1.06	0.06	0.592	0.63
06	WLAN5G	802.11a	Rear Face	56	13.0	12.89	1.03	0.11	0.314	**0.32**
	WLAN5G	802.11a	Left Side	56	13.0	12.89	1.03	-0.06	0.03	0.03
	WLAN5G	802.11a	Right Side	56	13.0	12.89	1.03	0.07	0.025	0.03
	WLAN5G	802.11a	Rear Face	52	13.0	12.68	1.08	0.04	0.279	0.30
	WLAN5G	802.11a	Rear Face	60	13.0	12.76	1.06	-0.08	0.282	0.30
	WLAN5G	802.11a	Rear Face	64	13.0	12.84	1.04	-0.01	0.296	0.31
07	WLAN5G	802.11a	Rear Face	100	13.0	12.92	1.02	-0.15	0.442	**0.45**
	WLAN5G	802.11a	Left Side	100	13.0	12.92	1.02	-0.06	0.058	0.06
	WLAN5G	802.11a	Right Side	100	13.0	12.92	1.02	0.13	0.038	0.04
	WLAN5G	802.11a	Rear Face	116	13.0	12.87	1.03	0.04	0.422	0.43
	WLAN5G	802.11a	Rear Face	120	13.0	12.77	1.05	-0.06	0.416	0.44
	WLAN5G	802.11a	Rear Face	124	13.0	12.64	1.09	0.14	0.407	0.44
	WLAN5G	802.11a	Rear Face	132	13.0	12.67	1.08	-0.08	0.396	0.43
	WLAN5G	802.11a	Rear Face	140	13.0	12.69	1.07	0.07	0.411	0.44
08	WLAN5G	802.11a	Rear Face	157	12.5	12.20	1.07	0.10	0.241	**0.26**
	WLAN5G	802.11a	Left Side	157	12.5	12.20	1.07	0.08	0.001	0.00
	WLAN5G	802.11a	Right Side	157	12.5	12.20	1.07	0.04	0.001	0.00
	WLAN5G	802.11a	Rear Face	149	12.5	12.15	1.08	0.07	0.226	0.24
	WLAN5G	802.11a	Rear Face	153	12.5	12.19	1.07	-0.04	0.212	0.23
	WLAN5G	802.11a	Rear Face	161	12.5	12.18	1.08	-0.03	0.223	0.24
	WLAN5G	802.11a	Rear Face	165	12.5	12.10	1.10	0.11	0.204	0.22

Note: The "< 0.001" means there is no SAR value or the SAR is too low to be measured.

Plot No.	Band	Mode	Test Position	Ch.	Max. Tune-up Power (dBm)	Measured Conducted Power (dBm)	Scaling Factor	Power Drift (dB)	Measured SAR-10g (W/kg)	Scaled SAR-10g (W/kg)
09	BT	LE	Rear Face	19	0.0	-0.11	1.03	0.12	0.000401	**0.00**
	BT	LE	Left Side	19	0.0	-0.11	1.03	0.07	0.0001	0.00
	BT	LE	Right Side	19	0.0	-0.11	1.03	-0.09	0.0001	0.00
	BT	LE	Rear Face	0	0.0	-1.03	1.27	0.01	0.000342	0.00
	BT	LE	Rear Face	39	0.0	-0.43	1.10	-0.06	0.000371	0.00

Note: The "< 0.0001" means there is no SAR value or the SAR is too low to be measured.

4.7.4 SAR Measurement Variability

According to KDB 865664 D01, SAR measurement variability was assessed for each frequency band, which is determined by the SAR probe calibration point and tissue-equivalent medium used for the device measurements. When both head and body tissue-equivalent media are required for SAR measurements in a frequency band, the variability measurement procedures should be applied to the tissue medium with the highest measured SAR, using the highest measured SAR configuration for that tissue-equivalent medium. Alternatively, if the highest measured SAR for both head and body tissue-equivalent media are ≤ 1.45 W/kg and the ratio of these highest SAR values, i.e., largest divided by smallest value, is ≤ 1.10, the highest SAR configuration for either head or body tissue-equivalent medium may be used to perform the repeated measurement. These additional measurements are repeated after the completion of all measurements requiring the same head or body tissue-equivalent medium in a frequency band. The test device should be returned to ambient conditions (normal room temperature) with the battery fully charged before it is re-mounted on the device holder for the repeated measurement(s) to minimize any unexpected variations in the repeated results.

Since all the measured SAR are less than 0.8 W/kg, the repeated measurement is not required.

4.7.5 Simultaneous Multi-band Transmission Evaluation

<Possibilities of Simultaneous Transmission>

The simultaneous transmission possibilities for this device are listed as below.

Simultaneous TX Combination	Capable Transmit Configurations	Body Exposure Condition	Extremity Exposure Condition
1	WLAN 2.4G + WLAN 5G	No	No
2	WLAN 2.4G + BT	No	No
3	WLAN 5G + BT	Yes	Yes
4.	WLAN + RFID	No	No

Note :

1. The WLAN 2.4G and WLAN 5G cannot transmit simultaneously.

<SAR Summation Analysis>

Simultaneous transmission SAR test exclusion is determined for each operating configuration and exposure condition according to the reported standalone SAR of each applicable simultaneous transmitting antenna. When the sum of SAR_{1g} of all simultaneously transmitting antennas in an operating mode and exposure condition combination is within the SAR limit (SAR_{1g} 1.6 W/kg), the simultaneous transmission SAR is not required. When the sum of SAR_{1g} is greater than the SAR limit (SAR_{1g} 1.6 W/kg), SAR test exclusion is determined by the SPLSR.

No.	Conditions (SAR1 + SAR2)	Exposure Condition	Test Position	Max. SAR1	Max. SAR2	SAR Summation	SPLSR Analysis
1	WLAN (NII) + BT (DSS)	Body-Worn	Front Face	0.00	0.00	0.00	Σ SAR < 1.6, Not required
			Rear Face	0.47	0.00	0.47	Σ SAR < 1.6, Not required
		Extremity	Rear Face	0.45	0.00	0.45	Σ SAR < 4.0, Not required
			Left Side	0.08	0.00	0.08	Σ SAR < 4.0, Not required
			Right Side	0.05	0.00	0.05	Σ SAR < 4.0, Not required

Test Engineer：James Chu, and Blake Wang

5. Calibration of Test Equipment

Equipment	Manufacturer	Model	SN	Cal. Date	Cal. Interval
System Validation Dipole	SPEAG	D2450V2	737	Aug. 17, 2017	1 Year
System Validation Dipole	SPEAG	D5GHzV2	1019	Aug. 23, 2017	1 Year
Dosimetric E-Field Probe	SPEAG	EX3DV4	3971	Mar. 24, 2017	1 Year
Data Acquisition Electronics	SPEAG	DAE4	861	May. 22, 2017	1 Year
Spectrum Analyzer	R&S	FSL6	102006	Mar. 27, 2017	1 Year
ENA Series Network Analyzer	Agilent	E5071C	MY46214281	Jun. 09, 2017	1 Year
Vector Signal Generator	Anritsu	MG3710A	6201599977	Mar. 27, 2017	1 Year
Power Meter	Anritsu	ML2495A	1218009	Jul. 12, 2017	1 Year
Power Sensor	Anritsu	MA2411B	1207252	Jul. 12, 2017	1 Year
Universal Wireless Test Set	Anritsu	MT8870A/MU887000A	6201699387	Sep. 14, 2017	1 Year
Thermometer	YFE	YF-160A	130504591	Mar. 24, 2017	1 Year
Power Amplifier	AR	5S1G4	0339656	Sep. 20, 2017	1 Year
Power Amplifier	mini-circuits	ZVE-8G	05770420A	Sep. 15, 2017	1 Year
Attenuator	MTJ	MTJ6011-03	N/A	Sep. 15, 2017	1 Year
Directional Coupler	Woken	0110A05602O-10	11122702	Sep. 15, 2017	1 Year
Dielectric Assessment Kit	SPEAG	DAK-3.5	1047	Aug. 15, 2017	1 Year

6. Measurement Uncertainty

Source of Uncertainty	Uncertainty (± %)	Probability Distribution	Divisor	Ci (1g)	Ci (10g)	Standard Uncertainty (± %, 1g)	Standard Uncertainty (± %, 10g)	Vi
Measurement System								
Probe Calibration	6.0	Normal	1	1	1	6.0	6.0	∞
Axial Isotropy	4.7	Rectangular	√3	√0.5	√0.5	1.9	1.9	∞
Hemispherical Isotropy	9.6	Rectangular	√3	√0.5	√0.5	3.9	3.9	∞
Boundary Effect	1.0	Rectangular	√3	1	1	0.6	0.6	∞
Linearity	4.7	Rectangular	√3	1	1	2.7	2.7	∞
Detection Limits	0.25	Rectangular	√3	1	1	0.14	0.14	∞
Probe Modulation Response	3.5	Rectangular	√3	1	1	2.0	2.0	∞
Readout Electronics	0.3	Normal	1	1	1	0.3	0.3	∞
Response Time	0.0	Rectangular	√3	1	1	0.0	0.0	∞
Integration Time	1.7	Rectangular	√3	1	1	1.0	1.0	∞
RF Ambient Conditions – Noise	3.0	Rectangular	√3	1	1	1.7	1.7	∞
RF Ambient Conditions – Reflections	3.0	Rectangular	√3	1	1	1.7	1.7	∞
Probe Positioner Mechanical Tolerance	0.4	Rectangular	√3	1	1	0.2	0.2	∞
Probe Positioning with Respect to Phantom	2.9	Rectangular	√3	1	1	1.7	1.7	∞
Post-processing	2.0	Rectangular	√3	1	1	1.2	1.2	∞
Test Sample Related								
Test Sample Positioning	4.38 / 1.35	Normal	1	1	1	4.4	1.4	29
Device Holder Uncertainty	2.9 / 4.1	Normal	1	1	1	2.9	4.1	11
Power Drift of Measurement	5.0	Rectangular	√3	1	1	2.9	2.9	∞
Power Scaling	0.0	Rectangular	√3	1	1	0.0	0.0	∞
Phantom and Setup								
Phantom Uncertainty (Shape and Thickness Tolerances)	7.2	Rectangular	√3	1	1	4.2	4.2	∞
Liquid Conductivity (Temperature Uncertainty)	3.24	Rectangular	√3	0.78	0.71	1.5	1.3	∞
Liquid Conductivity (Measured)	2.88	Normal	1	0.78	0.71	2.2	2.0	43
Liquid Permittivity (Temperature Uncertainty)	1.13	Rectangular	√3	0.23	0.26	0.2	0.2	∞
Liquid Permittivity (Measured)	2.50	Normal	1	0.23	0.26	0.6	0.7	54
Combined Standard Uncertainty						± 11.8 %	± 11.3 %	
Expanded Uncertainty (K=2)						**± 23.6 %**	**± 22.6 %**	

Body SAR Uncertainty Budget for Frequency Range of 300 MHz to 3 GHz

Source of Uncertainty	Uncertainty (± %)	Probability Distribution	Divisor	Ci (1g)	Ci (10g)	Standard Uncertainty (± %, 1g)	Standard Uncertainty (± %, 10g)	Vi
Measurement System								
Probe Calibration	6.55	Normal	1	1	1	6.55	6.55	∞
Axial Isotropy	4.7	Rectangular	√3	0.7	0.7	1.9	1.9	∞
Hemispherical Isotropy	9.6	Rectangular	√3	0.7	0.7	3.9	3.9	∞
Boundary Effect	2.0	Rectangular	√3	1	1	1.2	1.2	∞
Linearity	4.7	Rectangular	√3	1	1	2.7	2.7	∞
Detection Limits	0.25	Rectangular	√3	1	1	0.14	0.14	∞
Probe Modulation Response	3.5	Rectangular	√3	1	1	2.0	2.0	∞
Readout Electronics	0.3	Normal	1	1	1	0.3	0.3	∞
Response Time	0.0	Rectangular	√3	1	1	0.0	0.0	∞
Integration Time	1.7	Rectangular	√3	1	1	1.0	1.0	∞
RF Ambient Conditions – Noise	3.0	Rectangular	√3	1	1	1.7	1.7	∞
RF Ambient Conditions – Reflections	3.0	Rectangular	√3	1	1	1.7	1.7	∞
Probe Positioner Mechanical Tolerance	0.4	Rectangular	√3	1	1	0.2	0.2	∞
Probe Positioning with Respect to Phantom	6.7	Rectangular	√3	1	1	3.9	3.9	∞
Post-processing	4.0	Rectangular	√3	1	1	2.3	2.3	∞
Test Sample Related								
Test Sample Positioning	4.38 / 1.35	Normal	1	1	1	4.4	1.4	29
Device Holder Uncertainty	2.9 / 4.1	Normal	1	1	1	2.9	4.1	11
Power Drift of Measurement	5.0	Rectangular	√3	1	1	2.9	2.9	∞
Power Scaling	0.0	Rectangular	√3	1	1	0.0	0.0	∞
Phantom and Setup								
Phantom Uncertainty (Shape and Thickness Tolerances)	7.6	Rectangular	√3	1	1	4.4	4.4	∞
Liquid Conductivity (Temperature Uncertainty)	3.24	Rectangular	√3	0.78	0.71	1.5	1.3	∞
Liquid Conductivity (Measured)	2.88	Normal	1	0.78	0.71	2.2	2.0	43
Liquid Permittivity (Temperature Uncertainty)	1.13	Rectangular	√3	0.23	0.26	0.2	0.2	∞
Liquid Permittivity (Measured)	2.50	Normal	1	0.23	0.26	0.6	0.7	54
Combined Standard Uncertainty						± 12.8 %	± 12.4 %	
Expanded Uncertainty (K=2)						**± 25.6 %**	**± 24.8 %**	

Body SAR Uncertainty Budget for Frequency Range of 3 GHz to 6 GHz

7. Information on the Testing Laboratories

We, Bureau Veritas Consumer Products Services (H.K.) Ltd., Taoyuan Branch, were founded in 1988 to provide our best service in EMC, Radio, Telecom and Safety consultation. Our laboratories are accredited and approved according to ISO/IEC 17025.

If you have any comments, please feel free to contact us at the following:

Taiwan HwaYa EMC/RF/Safety/Telecom Lab:
Add: No. 19, Hwa Ya 2nd Rd, Wen Hwa Vil., Kwei Shan Hsiang, Taoyuan Hsien 333, Taiwan, R.O.C.
Tel: 886-3-318-3232
Fax: 886-3-327-0892

Taiwan LinKo EMC/RF Lab:
Add: No. 47-2, 14th Ling, Chia Pau Vil., Linkou Dist., New Taipei City 244, Taiwan, R.O.C.
Tel: 886-2-2605-2180
Fax: 886-2-2605-1924

Taiwan HsinChu EMC/RF Lab:
Add: E-2, No.1, Li Hsin 1st Road, Hsinchu Science Park, Hsinchu City 30078, Taiwan, R.O.C.
Tel: 886-3-593-5343
Fax: 886-3-593-5342

Email: service.adt@tw.bureauveritas.com
Web Site: www.adt.com.tw

The road map of all our labs can be found in our web site also.

---END---

Appendix A. SAR Plots of System Verification

The plots for system verification with largest deviation for each SAR system combination are shown as follows.

Test Laboratory: Bureau Veritas ADT SAR/HAC Testing Lab Date: 2017/12/26

System Check_B2450_171226

DUT: Dipole 2450 MHz; Type: D2450V2; SN: 737

Communication System: CW; Frequency: 2450 MHz;Duty Cycle: 1:1
Medium: B19T27N4_1226 Medium parameters used: f = 2450 MHz; σ = 1.947 S/m; ε_r = 50.873; ρ = 1000 kg/m^3
Ambient Temperature：23.7 ℃ ; Liquid Temperature：23.4 ℃

DASY5 Configuration:
- Probe: EX3DV4 - SN3971; ConvF(7.67, 7.67, 7.67); Calibrated: 2017/03/24;
- Sensor-Surface: 1.4mm (Mechanical Surface Detection)
- Electronics: DAE4 Sn861; Calibrated: 2017/05/22
- Phantom: Twin SAM Phantom_1823; Type: QD000P40CD;
- Measurement SW: DASY52, Version 52.8 (8); SEMCAD X Version 14.6.10 (7373)

Pin=250mW/Area Scan (81x81x1): Interpolated grid: dx=1.200 mm, dy=1.200 mm
Maximum value of SAR (interpolated) = 19.0 W/kg

Pin=250mW/Zoom Scan (7x7x7)/Cube 0: Measurement grid: dx=5mm, dy=5mm, dz=5mm
Reference Value = 98.68 V/m; Power Drift = -0.19 dB
Peak SAR (extrapolated) = 25.6 W/kg
SAR(1 g) = 12.4 W/kg; SAR(10 g) = 5.73 W/kg
Maximum value of SAR (measured) = 19.1 W/kg

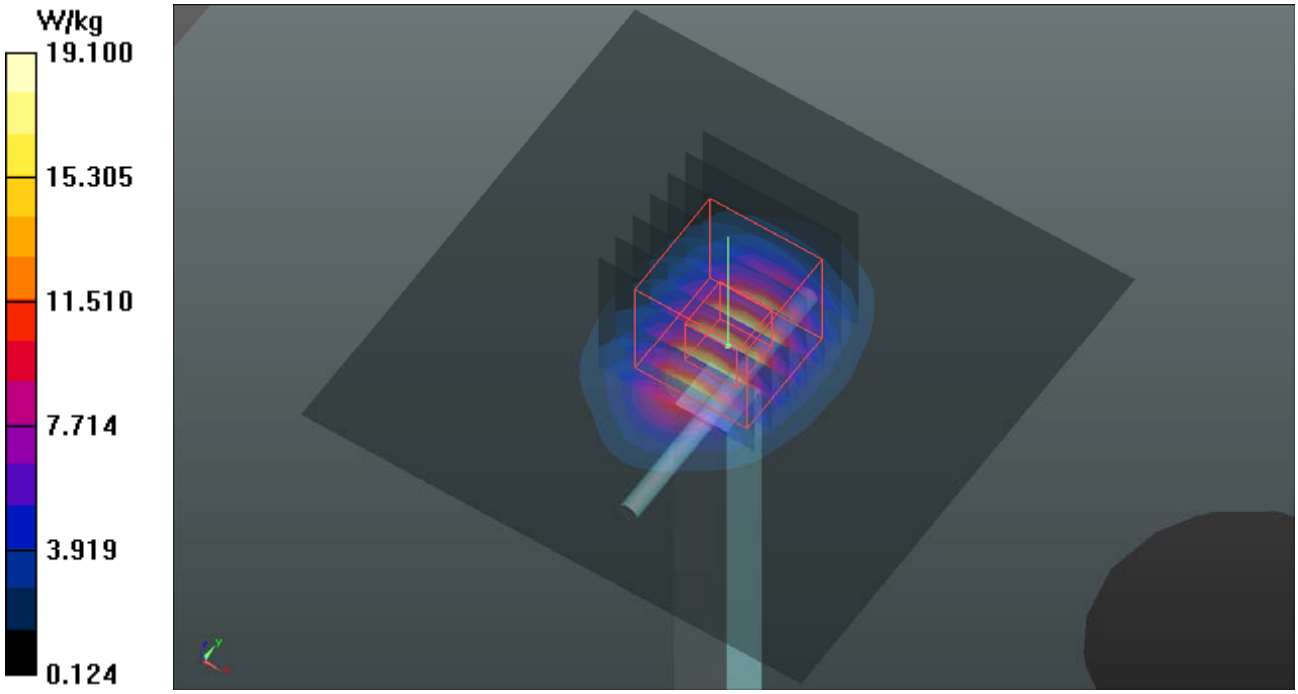

Test Laboratory: Bureau Veritas ADT SAR/HAC Testing Lab Date: 2017/12/25

System Check_B5250_171225

DUT: Dipole 5 GHz; Type: D5GHzV2; SN: 1019

Communication System: CW; Frequency: 5250 MHz;Duty Cycle: 1:1
Medium: B34T60N1_1225 Medium parameters used: f = 5250 MHz; σ = 5.29 S/m; ε_r = 50.923; ρ = 1000 kg/m^3
Ambient Temperature：23.8 ℃ ; Liquid Temperature：23.6 ℃

DASY5 Configuration:
- Probe: EX3DV4 - SN3971; ConvF(4.7, 4.7, 4.7); Calibrated: 2017/03/24;
- Sensor-Surface: 1.4mm (Mechanical Surface Detection)
- Electronics: DAE4 Sn861; Calibrated: 2017/05/22
- Phantom: Twin SAM Phantom_1653; Type: QD000P40;
- Measurement SW: DASY52, Version 52.8 (8); SEMCAD X Version 14.6.10 (7373)

Pin=100mW/Area Scan (91x91x1): Interpolated grid: dx=1.000 mm, dy=1.000 mm
Maximum value of SAR (interpolated) = 15.5 W/kg

Pin=100mW/Zoom Scan (7x7x12)/Cube 0: Measurement grid: dx=4mm, dy=4mm, dz=2mm
Reference Value = 54.37 V/m; Power Drift = -0.14 dB
Peak SAR (extrapolated) = 26.4 W/kg
SAR(1 g) = 7.21 W/kg; SAR(10 g) = 1.97 W/kg
Maximum value of SAR (measured) = 16.5 W/kg

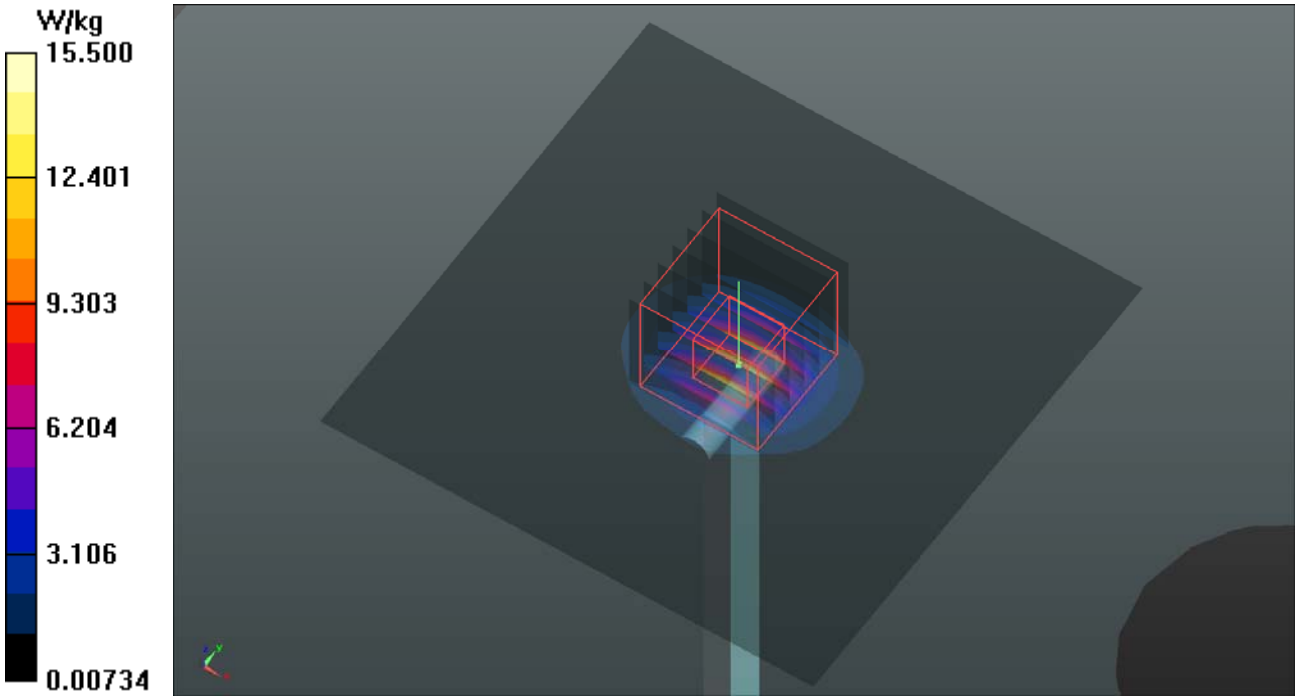

System Check_B5600_171225

DUT: Dipole 5 GHz; Type: D5GHzV2; SN: 1019

Communication System: CW; Frequency: 5600 MHz;Duty Cycle: 1:1
Medium: B34T60N1_1225 Medium parameters used: f = 5600 MHz; σ = 5.884 S/m; ε_r = 50.283; ρ = 1000 kg/m^3
Ambient Temperature：23.8 ℃ ; Liquid Temperature：23.6 ℃

DASY5 Configuration:
- Probe: EX3DV4 - SN3971; ConvF(4.1, 4.1, 4.1); Calibrated: 2017/03/24;
- Sensor-Surface: 1.4mm (Mechanical Surface Detection)
- Electronics: DAE4 Sn861; Calibrated: 2017/05/22
- Phantom: Twin SAM Phantom_1653; Type: QD000P40;
- Measurement SW: DASY52, Version 52.8 (8); SEMCAD X Version 14.6.10 (7373)

Pin=100mW/Area Scan (91x91x1): Interpolated grid: dx=1.000 mm, dy=1.000 mm
Maximum value of SAR (interpolated) = 18.4 W/kg

Pin=100mW/Zoom Scan (7x7x12)/Cube 0: Measurement grid: dx=4mm, dy=4mm, dz=2mm
Reference Value = 66.02 V/m; Power Drift = -0.08 dB
Peak SAR (extrapolated) = 33.9 W/kg
SAR(1 g) = 7.79 W/kg; SAR(10 g) = 2.17 W/kg
Maximum value of SAR (measured) = 20.2 W/kg

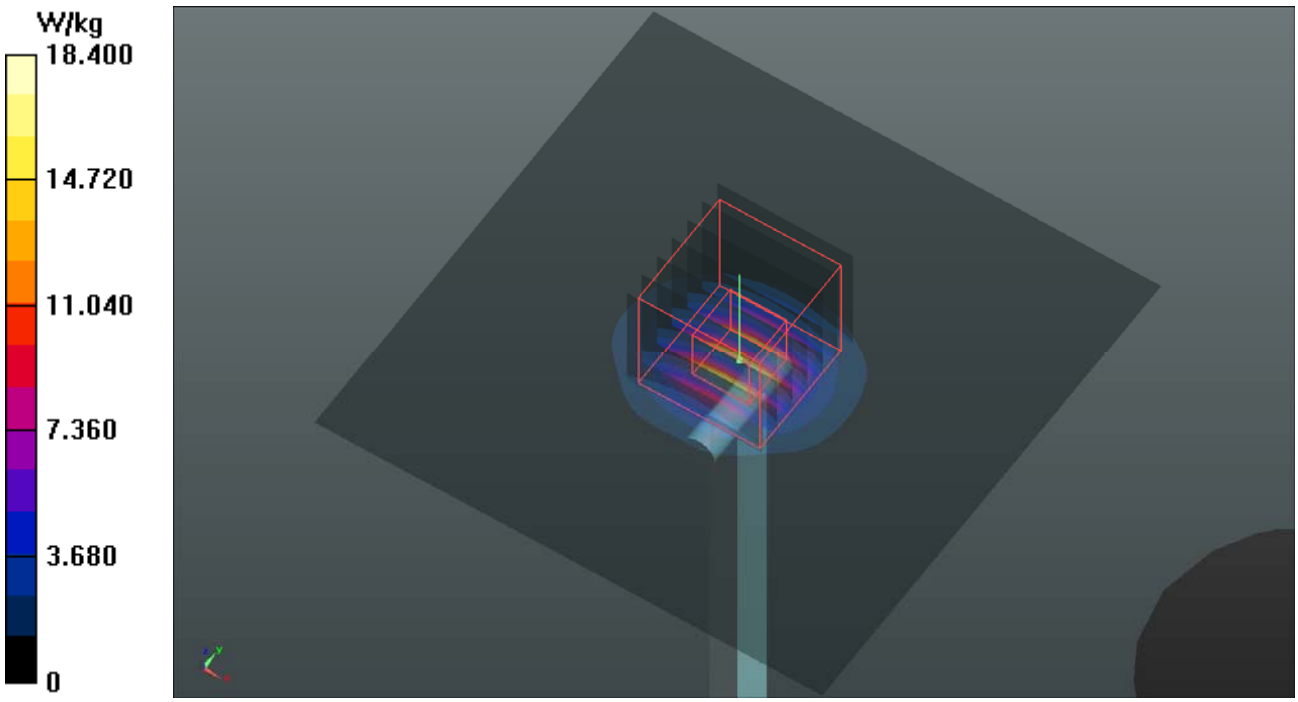

System Check_B5800_171225

DUT: Dipole 5 GHz; Type: D5GHzV2; SN: 1019

Communication System: CW; Frequency: 5800 MHz;Duty Cycle: 1:1
Medium: B34T60N1_1225 Medium parameters used: f = 5800 MHz; σ = 6.185 S/m; ε_r = 49.782; ρ = 1000 kg/m^3
Ambient Temperature：23.8 ℃ ; Liquid Temperature：23.6 ℃

DASY5 Configuration:
- Probe: EX3DV4 - SN3971; ConvF(4.22, 4.22, 4.22); Calibrated: 2017/03/24;
- Sensor-Surface: 1.4mm (Mechanical Surface Detection)
- Electronics: DAE4 Sn861; Calibrated: 2017/05/22
- Phantom: Twin SAM Phantom_1653; Type: QD000P40;
- Measurement SW: DASY52, Version 52.8 (8); SEMCAD X Version 14.6.10 (7373)

Pin=100mW/Area Scan (91x91x1): Interpolated grid: dx=1.000 mm, dy=1.000 mm
Maximum value of SAR (interpolated) = 19.0 W/kg

Pin=100mW/Zoom Scan (7x7x12)/Cube 0: Measurement grid: dx=4mm, dy=4mm, dz=2mm
Reference Value = 65.62 V/m; Power Drift = -0.11 dB
Peak SAR (extrapolated) = 36.3 W/kg
SAR(1 g) = 7.93 W/kg; SAR(10 g) = 2.23 W/kg
Maximum value of SAR (measured) = 20.8 W/kg

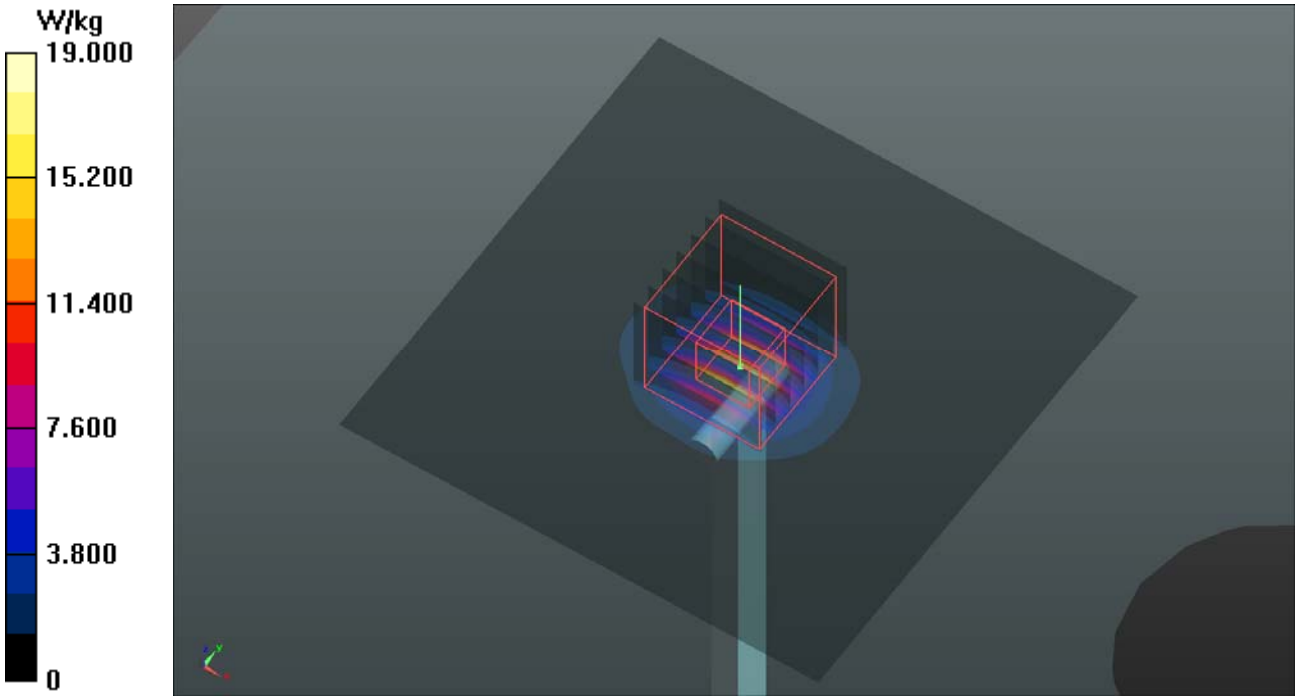

Test Laboratory: Bureau Veritas ADT SAR/HAC Testing Lab Date: 2017/12/26

System Check_B2450_171226

DUT: Dipole 2450 MHz; Type: D2450V2; SN: 737

Communication System: CW; Frequency: 2450 MHz;Duty Cycle: 1:1
Medium: B19T27N4_1226 Medium parameters used: f = 2450 MHz; σ = 1.947 S/m; ε_r = 50.873; ρ = 1000 kg/m^3
Ambient Temperature：23.7 ℃ ; Liquid Temperature：23.4 ℃

DASY5 Configuration:
- Probe: EX3DV4 - SN3971; ConvF(7.67, 7.67, 7.67); Calibrated: 2017/03/24;
- Sensor-Surface: 1.4mm (Mechanical Surface Detection)
- Electronics: DAE4 Sn861; Calibrated: 2017/05/22
- Phantom: Twin SAM Phantom_1823; Type: QD000P40CD;
- Measurement SW: DASY52, Version 52.8 (8); SEMCAD X Version 14.6.10 (7373)

Pin=250mW/Area Scan (81x81x1): Interpolated grid: dx=1.200 mm, dy=1.200 mm
Maximum value of SAR (interpolated) = 19.0 W/kg

Pin=250mW/Zoom Scan (7x7x7)/Cube 0: Measurement grid: dx=5mm, dy=5mm, dz=5mm
Reference Value = 98.68 V/m; Power Drift = -0.19 dB
Peak SAR (extrapolated) = 25.6 W/kg
SAR(1 g) = 12.4 W/kg; SAR(10 g) = 5.73 W/kg
Maximum value of SAR (measured) = 19.1 W/kg

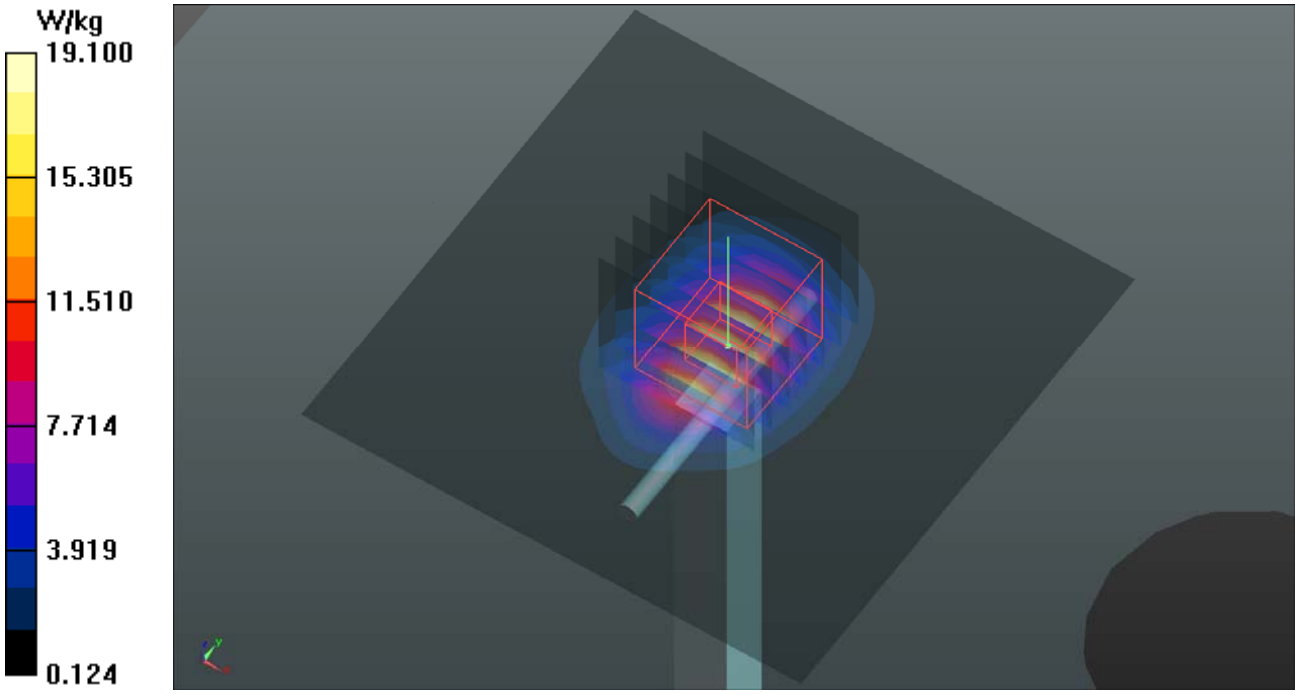

System Check_B5250_171225

DUT: Dipole 5 GHz; Type: D5GHzV2; SN: 1019

Communication System: CW; Frequency: 5250 MHz;Duty Cycle: 1:1
Medium: B34T60N1_1225 Medium parameters used: f = 5250 MHz; σ = 5.29 S/m; ε_r = 50.923; ρ = 1000 kg/m^3
Ambient Temperature：23.8 ℃ ; Liquid Temperature：23.6 ℃

DASY5 Configuration:
- Probe: EX3DV4 - SN3971; ConvF(4.7, 4.7, 4.7); Calibrated: 2017/03/24;
- Sensor-Surface: 1.4mm (Mechanical Surface Detection)
- Electronics: DAE4 Sn861; Calibrated: 2017/05/22
- PhantPhantom: Twin SAM Phantom_1653; Type: QD000P40;
- Measurement SW: DASY52, Version 52.8 (8); SEMCAD X Version 14.6.10 (7373)

Pin=100mW/Area Scan (91x91x1): Interpolated grid: dx=1.000 mm, dy=1.000 mm
Maximum value of SAR (interpolated) = 15.5 W/kg

Pin=100mW/Zoom Scan (7x7x12)/Cube 0: Measurement grid: dx=4mm, dy=4mm, dz=2mm
Reference Value = 54.37 V/m; Power Drift = -0.14 dB
Peak SAR (extrapolated) = 26.4 W/kg
SAR(1 g) = 7.21 W/kg; SAR(10 g) = 1.97 W/kg
Maximum value of SAR (measured) = 16.5 W/kg

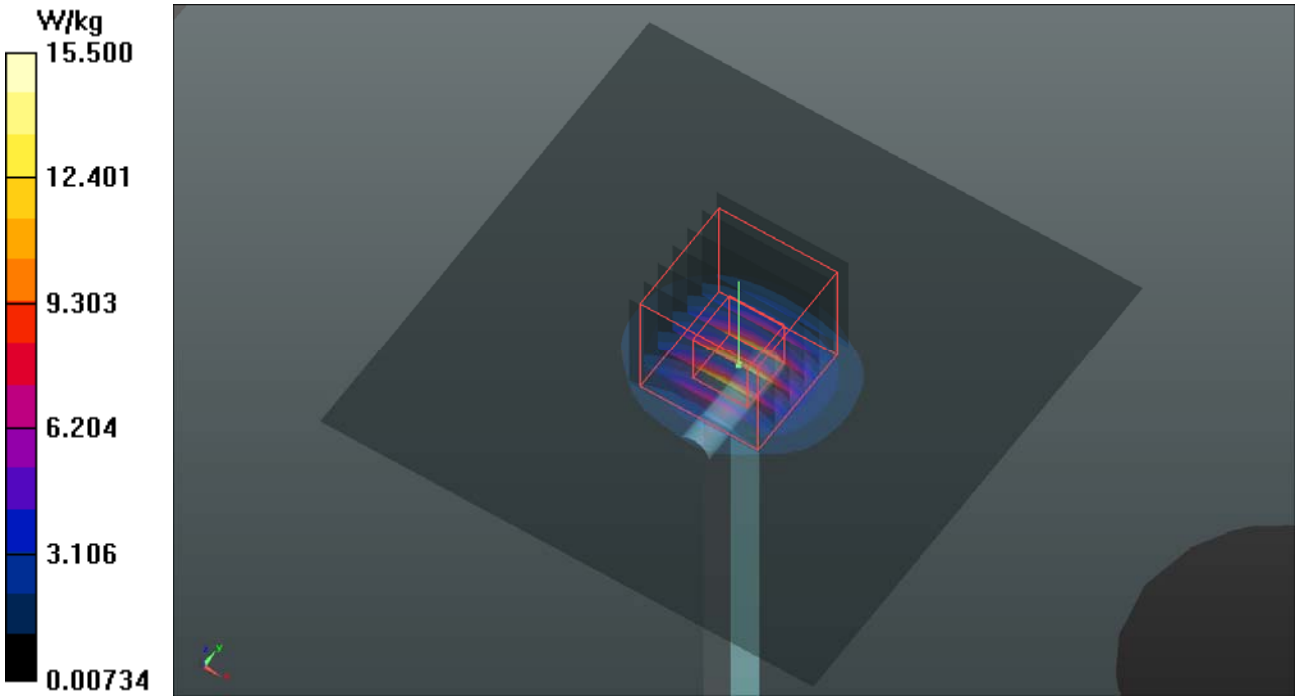

System Check_B5600_171225

DUT: Dipole 5 GHz; Type: D5GHzV2; SN: 1019

Communication System: CW; Frequency: 5600 MHz;Duty Cycle: 1:1
Medium: B34T60N1_1225 Medium parameters used: f = 5600 MHz; σ = 5.884 S/m; ε_r = 50.283; ρ = 1000 kg/m^3
Ambient Temperature：23.8 ℃ ; Liquid Temperature：23.6 ℃

DASY5 Configuration:
- Probe: EX3DV4 - SN3971; ConvF(4.1, 4.1, 4.1); Calibrated: 2017/03/24;
- Sensor-Surface: 1.4mm (Mechanical Surface Detection)
- Electronics: DAE4 Sn861; Calibrated: 2017/05/22
- Phantom: Twin SAM Phantom_1653; Type: QD000P40;
- Measurement SW: DASY52, Version 52.8 (8); SEMCAD X Version 14.6.10 (7373)

Pin=100mW/Area Scan (91x91x1): Interpolated grid: dx=1.000 mm, dy=1.000 mm
Maximum value of SAR (interpolated) = 18.4 W/kg

Pin=100mW/Zoom Scan (7x7x12)/Cube 0: Measurement grid: dx=4mm, dy=4mm, dz=2mm
Reference Value = 66.02 V/m; Power Drift = -0.08 dB
Peak SAR (extrapolated) = 33.9 W/kg
SAR(1 g) = 7.79 W/kg; SAR(10 g) = 2.17 W/kg
Maximum value of SAR (measured) = 20.2 W/kg

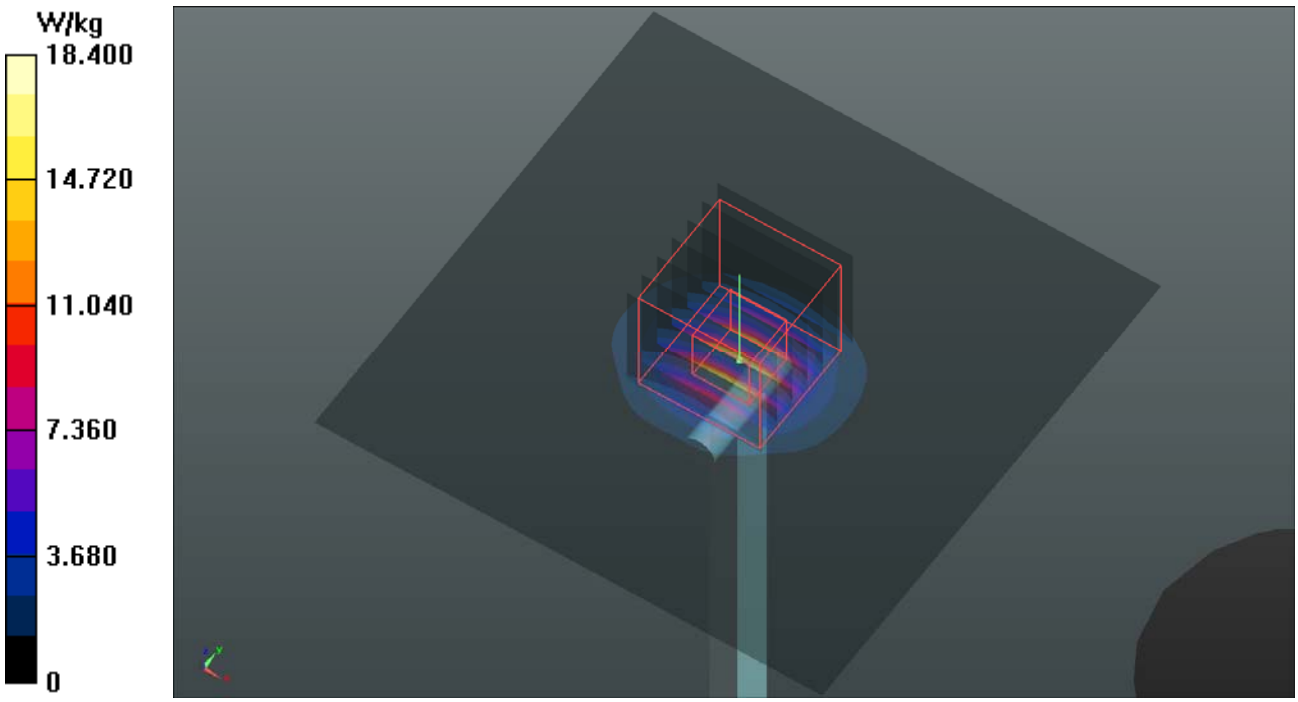

Test Laboratory: Bureau Veritas ADT SAR/HAC Testing Lab Date: 2017/12/26

System Check_B5800_171226

DUT: Dipole 5 GHz; Type: D5GHzV2; SN: 1019

Communication System: CW; Frequency: 5800 MHz;Duty Cycle: 1:1
Medium: B34T60N1_1226 Medium parameters used: f = 5800 MHz; σ = 6.027 S/m; ε_r = 50.022; ρ = 1000 kg/m^3
Ambient Temperature：23.7 ℃ ; Liquid Temperature：23.4 ℃

DASY5 Configuration:
- Probe: EX3DV4 - SN3971; ConvF(4.22, 4.22, 4.22); Calibrated: 2017/03/24;
- Sensor-Surface: 1.4mm (Mechanical Surface Detection)
- Electronics: DAE4 Sn861; Calibrated: 2017/05/22
- Phantom: Twin SAM Phantom_1823; Type: QD000P40CD;
- Measurement SW: DASY52, Version 52.8 (8); SEMCAD X Version 14.6.10 (7373)

Pin=100mW/Area Scan (91x91x1): Interpolated grid: dx=1.000 mm, dy=1.000 mm
Maximum value of SAR (interpolated) = 19.6 W/kg

Pin=100mW/Zoom Scan (7x7x12)/Cube 0: Measurement grid: dx=4mm, dy=4mm, dz=2mm
Reference Value = 57.16 V/m; Power Drift = -0.07 dB
Peak SAR (extrapolated) = 39.3 W/kg
SAR(1 g) = 8.07 W/kg; SAR(10 g) = 2.26 W/kg
Maximum value of SAR (measured) = 21.7 W/kg

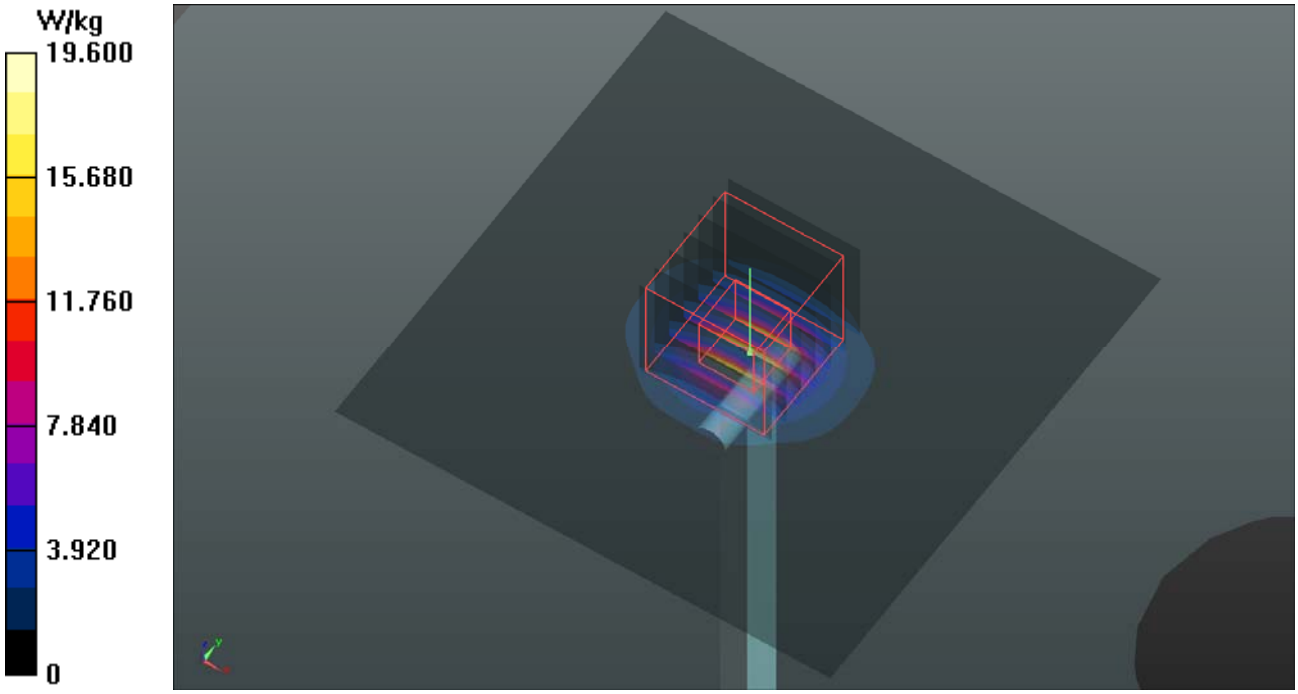

Appendix B. SAR Plots of SAR Measurement

The SAR plots for highest measured SAR in each exposure configuration, wireless mode and frequency band combination, and measured SAR > 1.5 W/kg are shown as follows.

P01 WLAN2.4G_802.11b_Rear Face_15mm_Ch6

DUT: 170822C09

Communication System: WLAN_2.4G; Frequency: 2437 MHz;Duty Cycle: 1:1
Medium: B19T27N4_1226 Medium parameters used: f = 2437 MHz; σ = 2.004 S/m; ε_r = 51.109; ρ = 1000 kg/m^3
Ambient Temperature：23.7 ℃ ; Liquid Temperature：23.4 ℃

DASY5 Configuration:
- Probe: EX3DV4 - SN3971; ConvF(7.67, 7.67, 7.67); Calibrated: 2017/03/24;
- Sensor-Surface: 1.4mm (Mechanical Surface Detection)
- Electronics: DAE4 Sn861; Calibrated: 2017/05/22
- Phantom: Twin SAM Phantom_1823; Type: QD000P40CD;
- Measurement SW: DASY52, Version 52.8 (8); SEMCAD X Version 14.6.10 (7373)

- Area Scan (91x151x1): Interpolated grid: dx=1.200 mm, dy=1.200 mm
Maximum value of SAR (interpolated) = 0.204 W/kg

- Zoom Scan (6x6x12)/Cube 0: Measurement grid: dx=5mm, dy=5mm, dz=2mm
Reference Value = 9.515 V/m; Power Drift = -0.07 dB
Peak SAR (extrapolated) = 0.320 W/kg
SAR(1 g) = 0.157 W/kg; SAR(10 g) = 0.088 W/kg
Maximum value of SAR (measured) = 0.249 W/kg

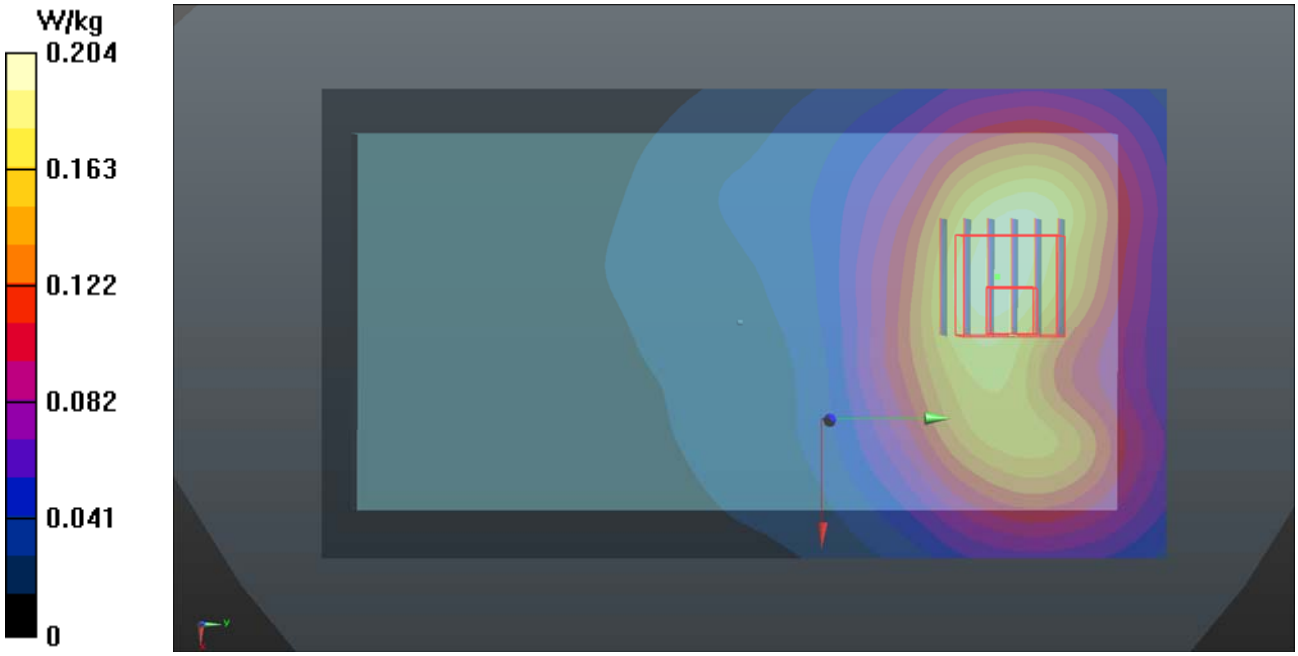

P02 WLAN5G_802.11a_Rear Face_15mm_Ch56

DUT: 170822C09

Communication System: WLAN_5G; Frequency: 5280 MHz;Duty Cycle: 1:1
Medium: B34T60N1_1225 Medium parameters used: f = 5280 MHz; σ = 5.343 S/m; ε_r = 50.9; ρ = 1000 kg/m^3
Ambient Temperature：23.8 ℃ ; Liquid Temperature：23.6 ℃

DASY5 Configuration:
- Probe: EX3DV4 - SN3971; ConvF(4.7, 4.7, 4.7); Calibrated: 2017/03/24;
- Sensor-Surface: 1.4mm (Mechanical Surface Detection)
- Electronics: DAE4 Sn861; Calibrated: 2017/05/22
- Phantom: Twin SAM Phantom_1653; Type: QD000P40;
- Measurement SW: DASY52, Version 52.8 (8); SEMCAD X Version 14.6.10 (7373)

- Area Scan (101x181x1): Interpolated grid: dx=1.000 mm, dy=1.000 mm
Maximum value of SAR (interpolated) = 0.569 W/kg

- Zoom Scan (6x6x12)/Cube 0: Measurement grid: dx=5mm, dy=5mm, dz=2mm
Reference Value = 9.188 V/m; Power Drift = 0.12 dB
Peak SAR (extrapolated) = 1.11 W/kg
SAR(1 g) = 0.329 W/kg; SAR(10 g) = 0.129 W/kg
Maximum value of SAR (measured) = 0.696 W/kg

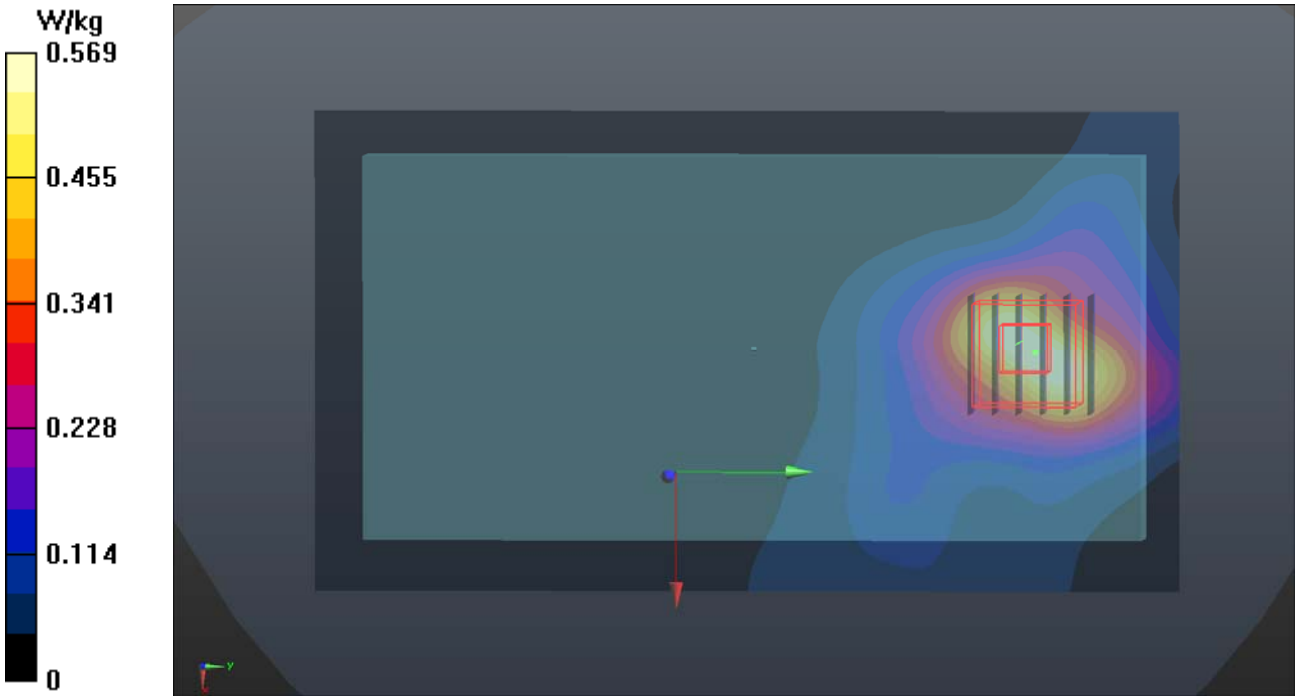

P03 WLAN5G_802.11a_Rear Face_15mm_Ch100

DUT: 170822C09

Communication System: WLAN_5G; Frequency: 5500 MHz;Duty Cycle: 1:1
Medium: B34T60N1_1225 Medium parameters used: f = 5500 MHz; σ = 5.718 S/m; ε_r = 50.529; ρ = 1000 kg/m^3
Ambient Temperature：23.8 ℃ ; Liquid Temperature：23.6 ℃

DASY5 Configuration:
- Probe: EX3DV4 - SN3971; ConvF(4.32, 4.32, 4.32); Calibrated: 2017/03/24;
- Sensor-Surface: 1.4mm (Mechanical Surface Detection)
- Electronics: DAE4 Sn861; Calibrated: 2017/05/22
- Phantom: Twin SAM Phantom_1653; Type: QD000P40;
- Measurement SW: DASY52, Version 52.8 (8); SEMCAD X Version 14.6.10 (7373)

- Area Scan (101x181x1): Interpolated grid: dx=1.000 mm, dy=1.000 mm
Maximum value of SAR (interpolated) = 0.985 W/kg

- Zoom Scan (6x6x12)/Cube 0: Measurement grid: dx=5mm, dy=5mm, dz=2mm
Reference Value = 13.07 V/m; Power Drift = -0.04 dB
Peak SAR (extrapolated) = 1.54 W/kg
SAR(1 g) = 0.459 W/kg; SAR(10 g) = 0.184 W/kg
Maximum value of SAR (measured) = 0.967 W/kg

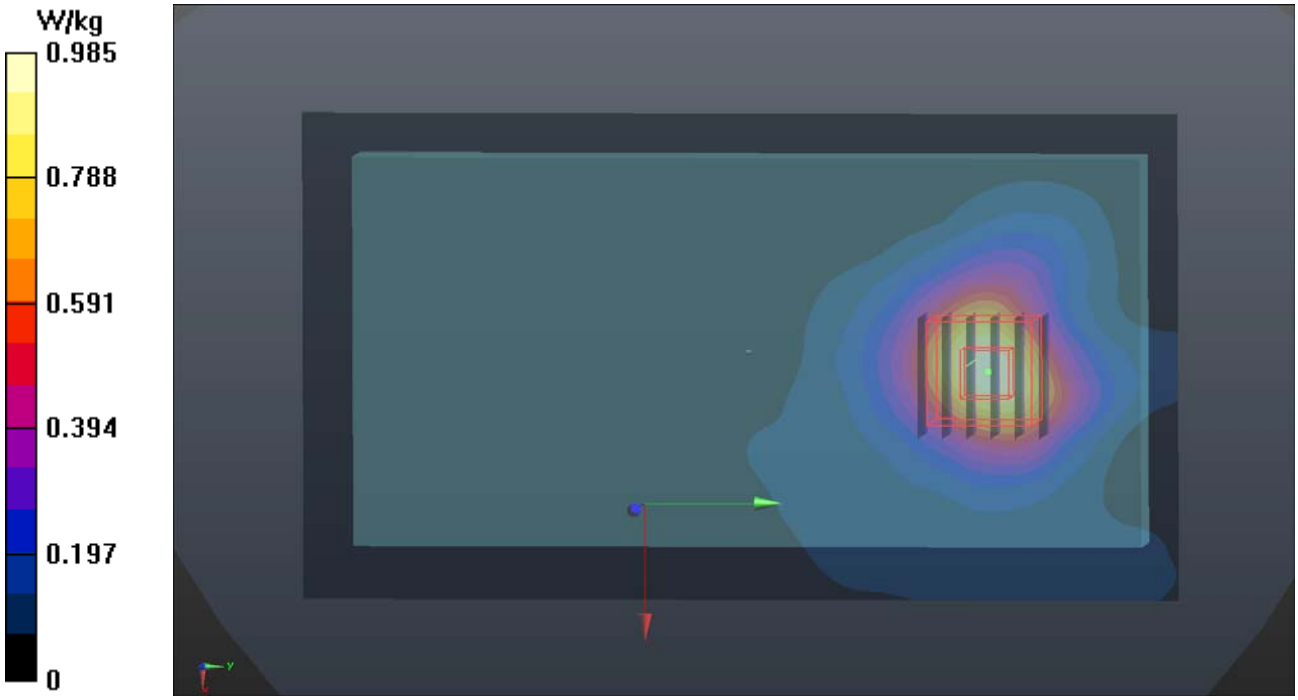

P04 WLAN5G_802.11a_Rear Face_15mm_Ch157

DUT: 170822C09

Communication System: WLAN_5G; Frequency: 5785 MHz;Duty Cycle: 1:1
Medium: B34T60N1_1225 Medium parameters used: f = 5785 MHz; σ = 6.157 S/m; ε_r = 49.825; ρ = 1000 kg/m^3
Ambient Temperature：23.8 ℃ ; Liquid Temperature：23.6 ℃

DASY5 Configuration:
- Probe: EX3DV4 - SN3971; ConvF(4.22, 4.22, 4.22); Calibrated: 2017/03/24;
- Sensor-Surface: 1.4mm (Mechanical Surface Detection)
- Electronics: DAE4 Sn861; Calibrated: 2017/05/22
- Phantom: Twin SAM Phantom_1653; Type: QD000P40;
- Measurement SW: DASY52, Version 52.8 (8); SEMCAD X Version 14.6.10 (7373)

- Area Scan (101x181x1): Interpolated grid: dx=1.000 mm, dy=1.000 mm
Maximum value of SAR (interpolated) = 0.498 W/kg

- Zoom Scan (6x6x12)/Cube 0: Measurement grid: dx=5mm, dy=5mm, dz=2mm
Reference Value = 7.952 V/m; Power Drift = 0.07 dB
Peak SAR (extrapolated) = 0.753 W/kg
SAR(1 g) = 0.207 W/kg; SAR(10 g) = 0.083 W/kg
Maximum value of SAR (measured) = 0.454 W/kg

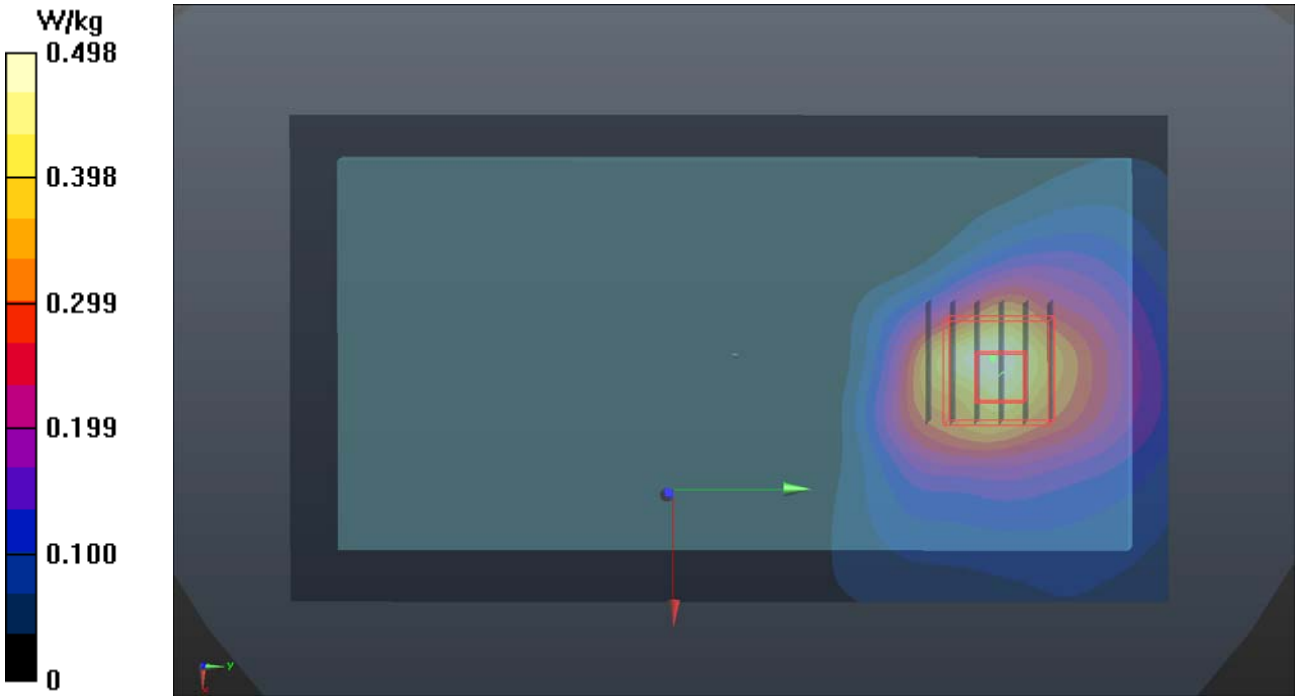

P05 WLAN2.4G_802.11b_Rear Face_0mm_Ch6

DUT: 170822C09

Communication System: WLAN_2.4G; Frequency: 2437 MHz;Duty Cycle: 1:1
Medium: B19T27N4_1226 Medium parameters used: f = 2437 MHz; σ = 2.004 S/m; ε_r = 51.109; ρ = 1000 kg/m^3
Ambient Temperature：23.7 ℃ ; Liquid Temperature：23.4 ℃

DASY5 Configuration:
- Probe: EX3DV4 - SN3971; ConvF(7.67, 7.67, 7.67); Calibrated: 2017/03/24;
- Sensor-Surface: 1.4mm (Mechanical Surface Detection)
- Electronics: DAE4 Sn861; Calibrated: 2017/05/22
- Phantom: Twin SAM Phantom_1823; Type: QD000P40CD;
- Measurement SW: DASY52, Version 52.8 (8); SEMCAD X Version 14.6.10 (7373)

- Area Scan (91x151x1): Interpolated grid: dx=1.200 mm, dy=1.200 mm
Maximum value of SAR (interpolated) = 0.809 W/kg

- Zoom Scan (5x5x7)/Cube 0: Measurement grid: dx=8mm, dy=8mm, dz=5mm
Reference Value = 17.46 V/m; Power Drift = 0.08 dB
Peak SAR (extrapolated) = 4.60 W/kg
SAR(1 g) = 1.58 W/kg; SAR(10 g) = 0.616 W/kg
Maximum value of SAR (measured) = 3.87 W/kg

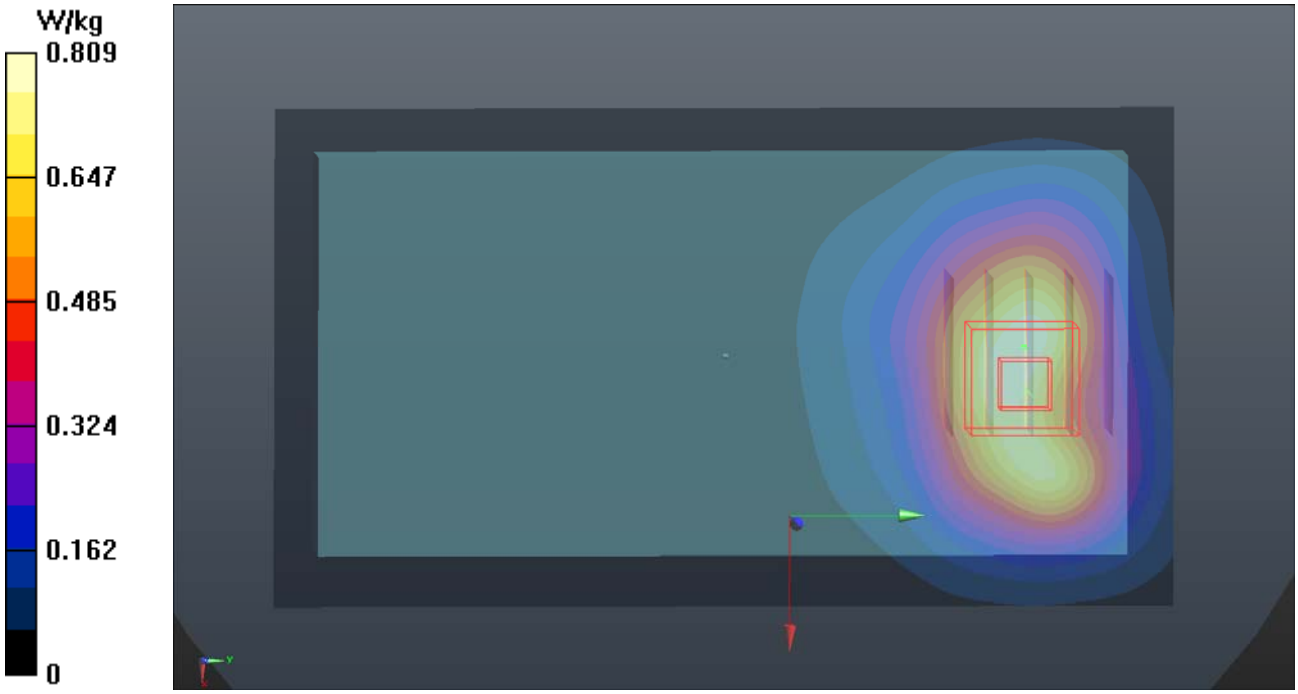

P06 WLAN5G_802.11a_Rear Face_0mm_Ch56

DUT: 170822C09

Communication System: WLAN_5G; Frequency: 5280 MHz;Duty Cycle: 1:1
Medium: B34T60N1_1225 Medium parameters used: f = 5280 MHz; σ = 5.343 S/m; ε_r = 50.9; ρ = 1000 kg/m^3
Ambient Temperature：23.8 ℃ ; Liquid Temperature：23.5 ℃

DASY5 Configuration:
- Probe: EX3DV4 - SN3971; ConvF(4.7, 4.7, 4.7); Calibrated: 2017/03/24;
- Sensor-Surface: 1.4mm (Mechanical Surface Detection)
- Electronics: DAE4 Sn861; Calibrated: 2017/05/22
- Phantom: Twin SAM Phantom_1653; Type: QD000P40;
- Measurement SW: DASY52, Version 52.8 (8); SEMCAD X Version 14.6.10 (7373)

- Area Scan (101x181x1): Interpolated grid: dx=1.000 mm, dy=1.000 mm
Maximum value of SAR (interpolated) = 1.54 W/kg

- Zoom Scan (6x6x12)/Cube 0: Measurement grid: dx=5mm, dy=5mm, dz=2mm
Reference Value = 14.86 V/m; Power Drift = 0.11 dB
Peak SAR (extrapolated) = 6.35 W/kg
SAR(1 g) = 1.22 W/kg; SAR(10 g) = 0.314 W/kg
Maximum value of SAR (measured) = 3.56 W/kg

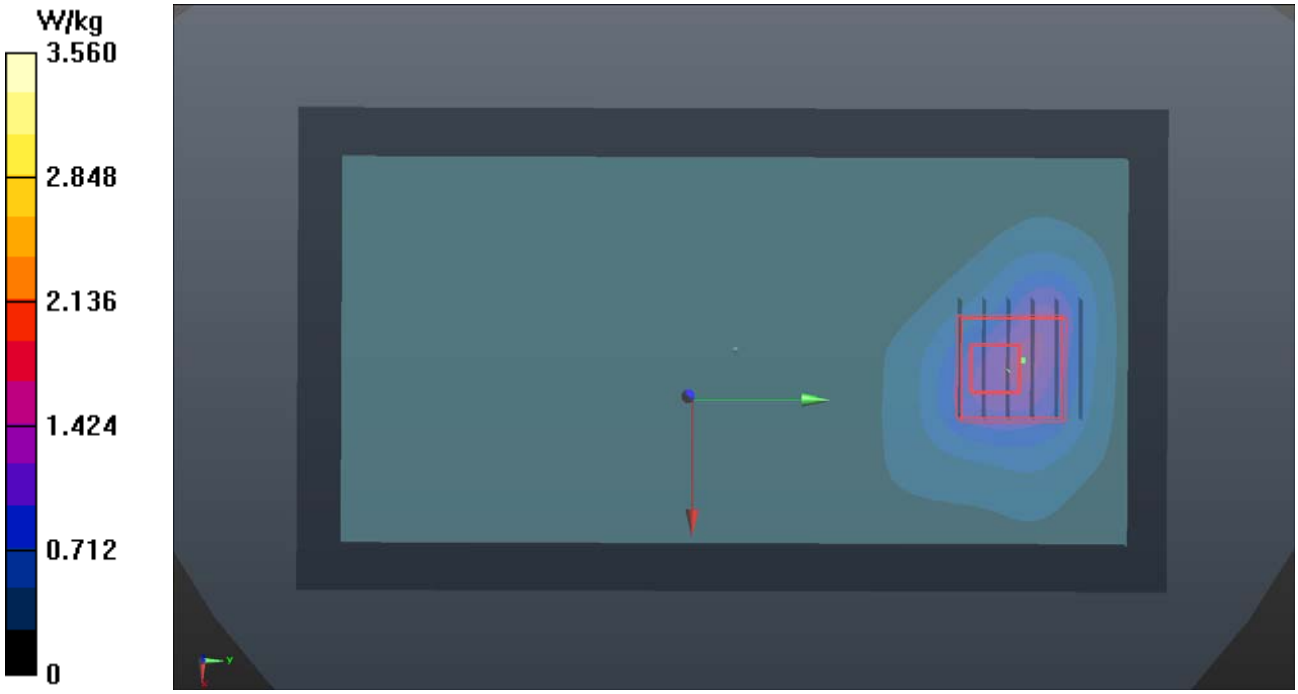

P07 WLAN5G_802.11a_Rear Face_0mm_Ch100

DUT: 170822C09

Communication System: WLAN_5G; Frequency: 5500 MHz;Duty Cycle: 1:1
Medium: B34T60N1_1225 Medium parameters used: f = 5500 MHz; σ = 5.718 S/m; ε_r = 50.529; ρ = 1000 kg/m^3
Ambient Temperature：23.8 ℃ ; Liquid Temperature：23.6 ℃

DASY5 Configuration:
- Probe: EX3DV4 - SN3971; ConvF(4.32, 4.32, 4.32); Calibrated: 2017/03/24;
- Sensor-Surface: 1.4mm (Mechanical Surface Detection)
- Electronics: DAE4 Sn861; Calibrated: 2017/05/22
- Phantom: Twin SAM Phantom_1653; Type: QD000P40;
- Measurement SW: DASY52, Version 52.8 (8); SEMCAD X Version 14.6.10 (7373)

- Area Scan (101x181x1): Interpolated grid: dx=1.000 mm, dy=1.000 mm
Maximum value of SAR (interpolated) = 1.56 W/kg

- Zoom Scan (6x6x12)/Cube 0: Measurement grid: dx=5mm, dy=5mm, dz=2mm
Reference Value = 16.29 V/m; Power Drift = -0.15 dB
Peak SAR (extrapolated) = 11.3 W/kg
SAR(1 g) = 1.92 W/kg; SAR(10 g) = 0.442 W/kg
Maximum value of SAR (measured) = 6.52 W/kg

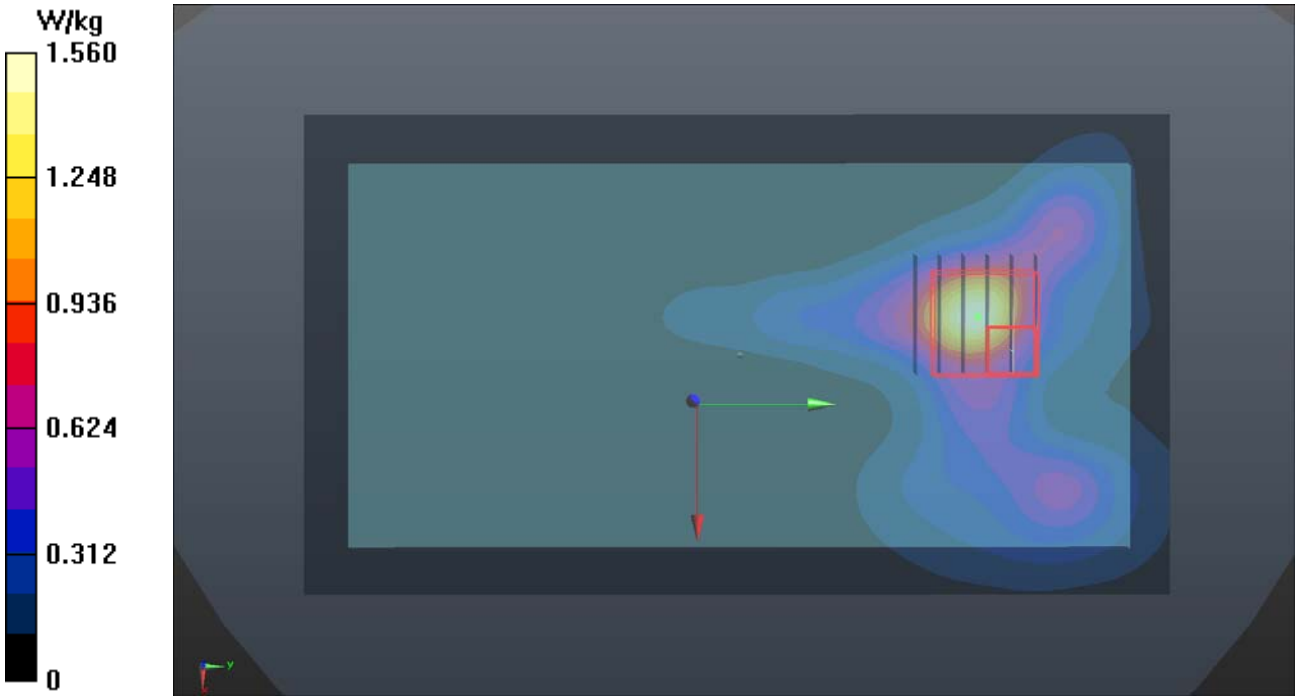

P08 WLAN5G_802.11a_Rear Face_0mm_Ch157

DUT: 170822C09

Communication System: WLAN_5G; Frequency: 5785 MHz;Duty Cycle: 1:1
Medium: B34T60N1_1226 Medium parameters used: f = 5785 MHz; σ = 6.187 S/m; ε_r = 46.619; ρ = 1000 kg/m^3
Ambient Temperature：23.7 ℃ ; Liquid Temperature：23.4 ℃

DASY5 Configuration:
- Probe: EX3DV4 - SN3971; ConvF(4.22, 4.22, 4.22); Calibrated: 2017/03/24;
- Sensor-Surface: 1.4mm (Mechanical Surface Detection)
- Electronics: DAE4 Sn861; Calibrated: 2017/05/22
- Phantom: Twin SAM Phantom_1823; Type: QD000P40CD;
- Measurement SW: DASY52, Version 52.8 (8); SEMCAD X Version 14.6.10 (7373)

- Area Scan (101x181x1): Interpolated grid: dx=1.000 mm, dy=1.000 mm
Maximum value of SAR (interpolated) = 0.802 W/kg

- Zoom Scan (6x6x12)/Cube 0: Measurement grid: dx=5mm, dy=5mm, dz=2mm
Reference Value = 9.987 V/m; Power Drift = 0.10 dB
Peak SAR (extrapolated) = 6.55 W/kg
SAR(1 g) = 0.924 W/kg; SAR(10 g) = 0.241 W/kg
Maximum value of SAR (measured) = 3.63 W/kg

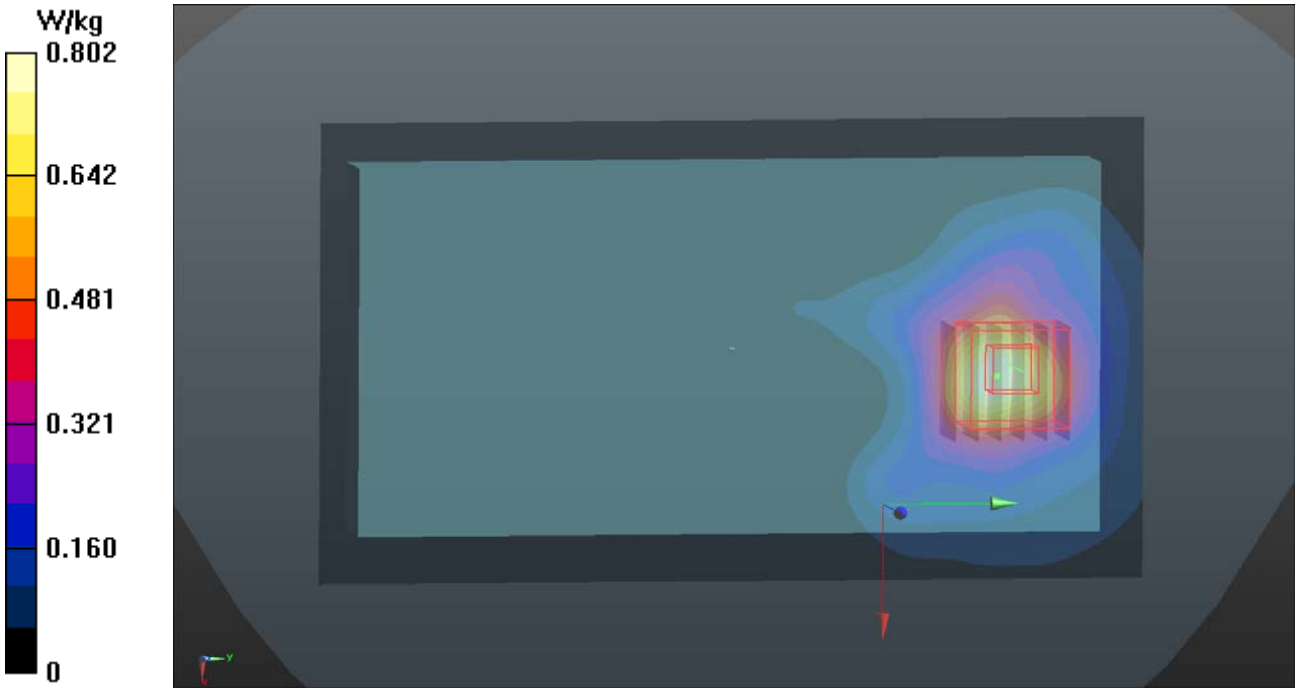

P09 BT_LE_Rear Face_0mm_Ch19

DUT: 170822C09

Communication System: BT; Frequency: 2440 MHz;Duty Cycle: 1:1
Medium: B19T27N4_1226 Medium parameters used: f = 2440 MHz; σ = 2.007 S/m; ε_r = 51.099; ρ = 1000 kg/m^3
Ambient Temperature：23.7 ℃ ; Liquid Temperature：23.4 ℃

DASY5 Configuration:
- Probe: EX3DV4 - SN3971; ConvF(7.67, 7.67, 7.67); Calibrated: 2017/03/24;
- Sensor-Surface: 1.4mm (Mechanical Surface Detection)
- Electronics: DAE4 Sn861; Calibrated: 2017/05/22
- Phantom: Twin SAM Phantom_1823; Type: QD000P40CD;
- Measurement SW: DASY52, Version 52.8 (8); SEMCAD X Version 14.6.10 (7373)

- Area Scan (101x151x1): Interpolated grid: dx=1.200 mm, dy=1.200 mm
Maximum value of SAR (interpolated) = 0.000789 W/kg

- Zoom Scan (6x6x12)/Cube 0: Measurement grid: dx=8mm, dy=8mm, dz=5mm
Reference Value = 1.275 V/m; Power Drift = 0.12 dB
Peak SAR (extrapolated) = 0.00827 W/kg
SAR(1 g) = 0.00195 W/kg; SAR(10 g) = 0.000401 W/kg
Maximum value of SAR (measured) = 0.00628 W/kg

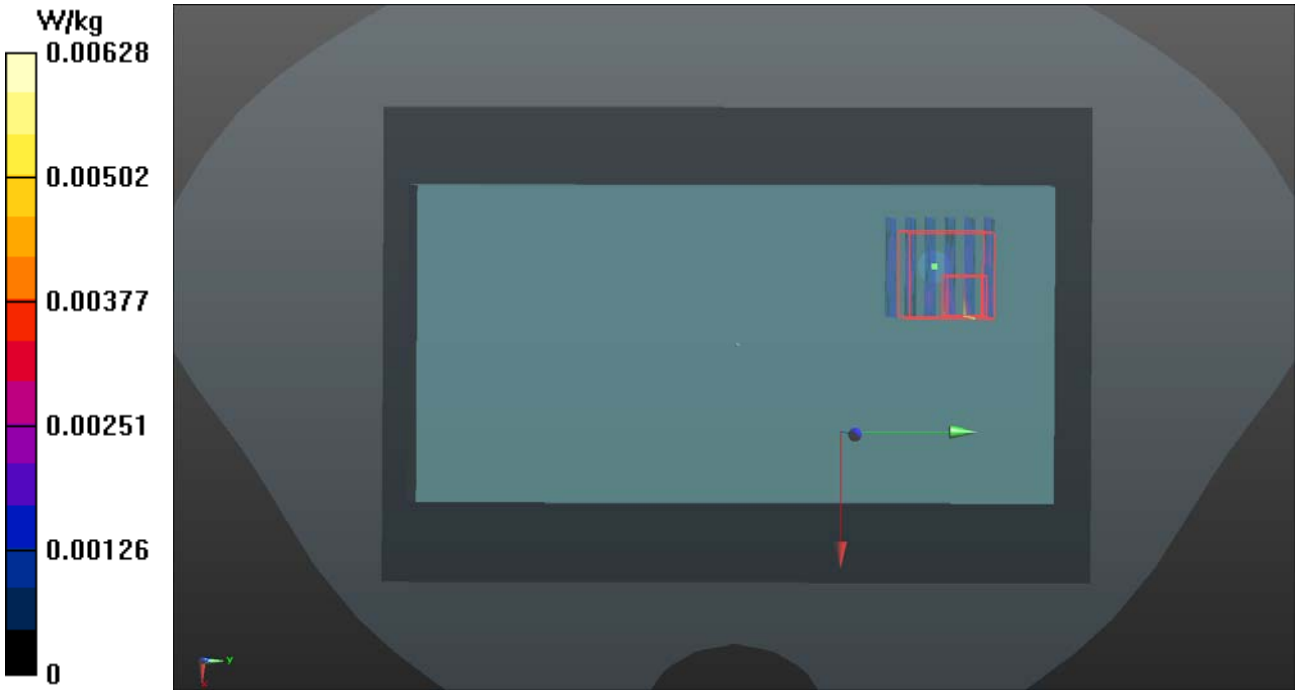

Appendix C. Calibration Certificate for Probe and Dipole

The SPEAG calibration certificates are shown as follows.

Calibration Laboratory of
Schmid & Partner
Engineering AG
Zeughausstrasse 43, 8004 Zurich, Switzerland

S Schweizerischer Kalibrierdienst
C Service suisse d'étalonnage
Servizio svizzero di taratura
S Swiss Calibration Service

Accredited by the Swiss Accreditation Service (SAS)
The Swiss Accreditation Service is one of the signatories to the EA Multilateral Agreement for the recognition of calibration certificates

Accreditation No.: SCS 0108

Client **B.V. ADT (Auden)**

Certificate No: D2450V2-737_Aug17

CALIBRATION CERTIFICATE

Object	D2450V2 - SN:737
Calibration procedure(s)	QA CAL-05.v9 Calibration procedure for dipole validation kits above 700 MHz
Calibration date:	August 17, 2017

This calibration certificate documents the traceability to national standards, which realize the physical units of measurements (SI).
The measurements and the uncertainties with confidence probability are given on the following pages and are part of the certificate.

All calibrations have been conducted in the closed laboratory facility: environment temperature (22 ± 3)°C and humidity < 70%.

Calibration Equipment used (M&TE critical for calibration)

Primary Standards	ID #	Cal Date (Certificate No.)	Scheduled Calibration
Power meter NRP	SN: 104778	04-Apr-17 (No. 217-02521/02522)	Apr-18
Power sensor NRP-Z91	SN: 103244	04-Apr-17 (No. 217-02521)	Apr-18
Power sensor NRP-Z91	SN: 103245	04-Apr-17 (No. 217-02522)	Apr-18
Reference 20 dB Attenuator	SN: 5058 (20k)	07-Apr-17 (No. 217-02528)	Apr-18
Type-N mismatch combination	SN: 5047.2 / 06327	07-Apr-17 (No. 217-02529)	Apr-18
Reference Probe EX3DV4	SN: 7349	31-May-17 (No. EX3-7349_May17)	May-18
DAE4	SN: 601	28-Mar-17 (No. DAE4-601_Mar17)	Mar-18

Secondary Standards	ID #	Check Date (in house)	Scheduled Check
Power meter EPM-442A	SN: GB37480704	07-Oct-15 (in house check Oct-16)	In house check: Oct-18
Power sensor HP 8481A	SN: US37292783	07-Oct-15 (in house check Oct-16)	In house check: Oct-18
Power sensor HP 8481A	SN: MY41092317	07-Oct-15 (in house check Oct-16)	In house check: Oct-18
RF generator R&S SMT-06	SN: 100972	15-Jun-15 (in house check Oct-16)	In house check: Oct-18
Network Analyzer HP 8753E	SN: US37390585	18-Oct-01 (in house check Oct-16)	In house check: Oct-17

	Name	Function	Signature
Calibrated by:	Michael Weber	Laboratory Technician	
Approved by:	Katja Pokovic	Technical Manager	

Issued: August 17, 2017

This calibration certificate shall not be reproduced except in full without written approval of the laboratory.

Glossary:

TSL	tissue simulating liquid
ConvF	sensitivity in TSL / NORM x,y,z
N/A	not applicable or not measured

Calibration is Performed According to the Following Standards:

a) IEEE Std 1528-2013, "IEEE Recommended Practice for Determining the Peak Spatial-Averaged Specific Absorption Rate (SAR) in the Human Head from Wireless Communications Devices: Measurement Techniques", June 2013
b) IEC 62209-1, "Measurement procedure for the assessment of Specific Absorption Rate (SAR) from hand-held and body-mounted devices used next to the ear (frequency range of 300 MHz to 6 GHz)", July 2016
c) IEC 62209-2, "Procedure to determine the Specific Absorption Rate (SAR) for wireless communication devices used in close proximity to the human body (frequency range of 30 MHz to 6 GHz)", March 2010
d) KDB 865664, "SAR Measurement Requirements for 100 MHz to 6 GHz"

Additional Documentation:

e) DASY4/5 System Handbook

Methods Applied and Interpretation of Parameters:

- *Measurement Conditions:* Further details are available from the Validation Report at the end of the certificate. All figures stated in the certificate are valid at the frequency indicated.
- *Antenna Parameters with TSL:* The dipole is mounted with the spacer to position its feed point exactly below the center marking of the flat phantom section, with the arms oriented parallel to the body axis.
- *Feed Point Impedance and Return Loss:* These parameters are measured with the dipole positioned under the liquid filled phantom. The impedance stated is transformed from the measurement at the SMA connector to the feed point. The Return Loss ensures low reflected power. No uncertainty required.
- *Electrical Delay:* One-way delay between the SMA connector and the antenna feed point. No uncertainty required.
- *SAR measured:* SAR measured at the stated antenna input power.
- *SAR normalized:* SAR as measured, normalized to an input power of 1 W at the antenna connector.
- *SAR for nominal TSL parameters:* The measured TSL parameters are used to calculate the nominal SAR result.

The reported uncertainty of measurement is stated as the standard uncertainty of measurement multiplied by the coverage factor k=2, which for a normal distribution corresponds to a coverage probability of approximately 95%.

Measurement Conditions

DASY system configuration, as far as not given on page 1.

DASY Version	DASY5	V52.10.0
Extrapolation	Advanced Extrapolation	
Phantom	Modular Flat Phantom	
Distance Dipole Center - TSL	10 mm	with Spacer
Zoom Scan Resolution	dx, dy, dz = 5 mm	
Frequency	2450 MHz ± 1 MHz	

Head TSL parameters

The following parameters and calculations were applied.

	Temperature	**Permittivity**	**Conductivity**
Nominal Head TSL parameters	22.0 °C	39.2	1.80 mho/m
Measured Head TSL parameters	(22.0 ± 0.2) °C	37.8 ± 6 %	1.86 mho/m ± 6 %
Head TSL temperature change during test	< 0.5 °C	----	----

SAR result with Head TSL

SAR averaged over 1 cm³ (1 g) of Head TSL	Condition	
SAR measured	250 mW input power	13.0 W/kg
SAR for nominal Head TSL parameters	normalized to 1W	**50.8 W/kg ± 17.0 % (k=2)**

SAR averaged over 10 cm³ (10 g) of Head TSL	condition	
SAR measured	250 mW input power	6.01 W/kg
SAR for nominal Head TSL parameters	normalized to 1W	**23.7 W/kg ± 16.5 % (k=2)**

Body TSL parameters

The following parameters and calculations were applied.

	Temperature	**Permittivity**	**Conductivity**
Nominal Body TSL parameters	22.0 °C	52.7	1.95 mho/m
Measured Body TSL parameters	(22.0 ± 0.2) °C	51.9 ± 6 %	2.03 mho/m ± 6 %
Body TSL temperature change during test	< 0.5 °C	----	----

SAR result with Body TSL

SAR averaged over 1 cm³ (1 g) of Body TSL	Condition	
SAR measured	250 mW input power	12.7 W/kg
SAR for nominal Body TSL parameters	normalized to 1W	**49.7 W/kg ± 17.0 % (k=2)**

SAR averaged over 10 cm³ (10 g) of Body TSL	condition	
SAR measured	250 mW input power	5.92 W/kg
SAR for nominal Body TSL parameters	normalized to 1W	**23.4 W/kg ± 16.5 % (k=2)**

Appendix (Additional assessments outside the scope of SCS 0108)

Antenna Parameters with Head TSL

Impedance, transformed to feed point	54.6 Ω + 5.8 jΩ
Return Loss	- 23.0 dB

Antenna Parameters with Body TSL

Impedance, transformed to feed point	50.4 Ω + 7.0 jΩ
Return Loss	- 23.1 dB

General Antenna Parameters and Design

Electrical Delay (one direction)	1.161 ns

After long term use with 100W radiated power, only a slight warming of the dipole near the feedpoint can be measured.

The dipole is made of standard semirigid coaxial cable. The center conductor of the feeding line is directly connected to the second arm of the dipole. The antenna is therefore short-circuited for DC-signals. On some of the dipoles, small end caps are added to the dipole arms in order to improve matching when loaded according to the position as explained in the "Measurement Conditions" paragraph. The SAR data are not affected by this change. The overall dipole length is still according to the Standard.
No excessive force must be applied to the dipole arms, because they might bend or the soldered connections near the feedpoint may be damaged.

Additional EUT Data

Manufactured by	SPEAG
Manufactured on	August 26, 2003

DASY5 Validation Report for Head TSL

Date: 17.08.2017

Test Laboratory: SPEAG, Zurich, Switzerland

DUT: Dipole 2450 MHz; Type: D2450V2; Serial: D2450V2 - SN: 737

Communication System: UID 0 - CW; Frequency: 2450 MHz
Medium parameters used: f = 2450 MHz; σ = 1.86 S/m; ε_r = 37.8; ρ = 1000 kg/m^3
Phantom section: Flat Section
Measurement Standard: DASY5 (IEEE/IEC/ANSI C63.19-2011)

DASY52 Configuration:

- Probe: EX3DV4 - SN7349; ConvF(8.12, 8.12, 8.12); Calibrated: 31.05.2017;
- Sensor-Surface: 1.4mm (Mechanical Surface Detection)
- Electronics: DAE4 Sn601; Calibrated: 28.03.2017
- Phantom: Flat Phantom 5.0 (front); Type: QD 000 P50 AA; Serial: 1001
- DASY52 52.10.0(1446); SEMCAD X 14.6.10(7417)

Dipole Calibration for Head Tissue/Pin=250 mW, d=10mm/Zoom Scan (7x7x7)/Cube 0:

Measurement grid: dx=5mm, dy=5mm, dz=5mm
Reference Value = 112.6 V/m; Power Drift = -0.03 dB
Peak SAR (extrapolated) = 26.4 W/kg
SAR(1 g) = 13 W/kg; SAR(10 g) = 6.01 W/kg
Maximum value of SAR (measured) = 21.1 W/kg

0 dB = 21.1 W/kg = 13.24 dBW/kg

Impedance Measurement Plot for Head TSL

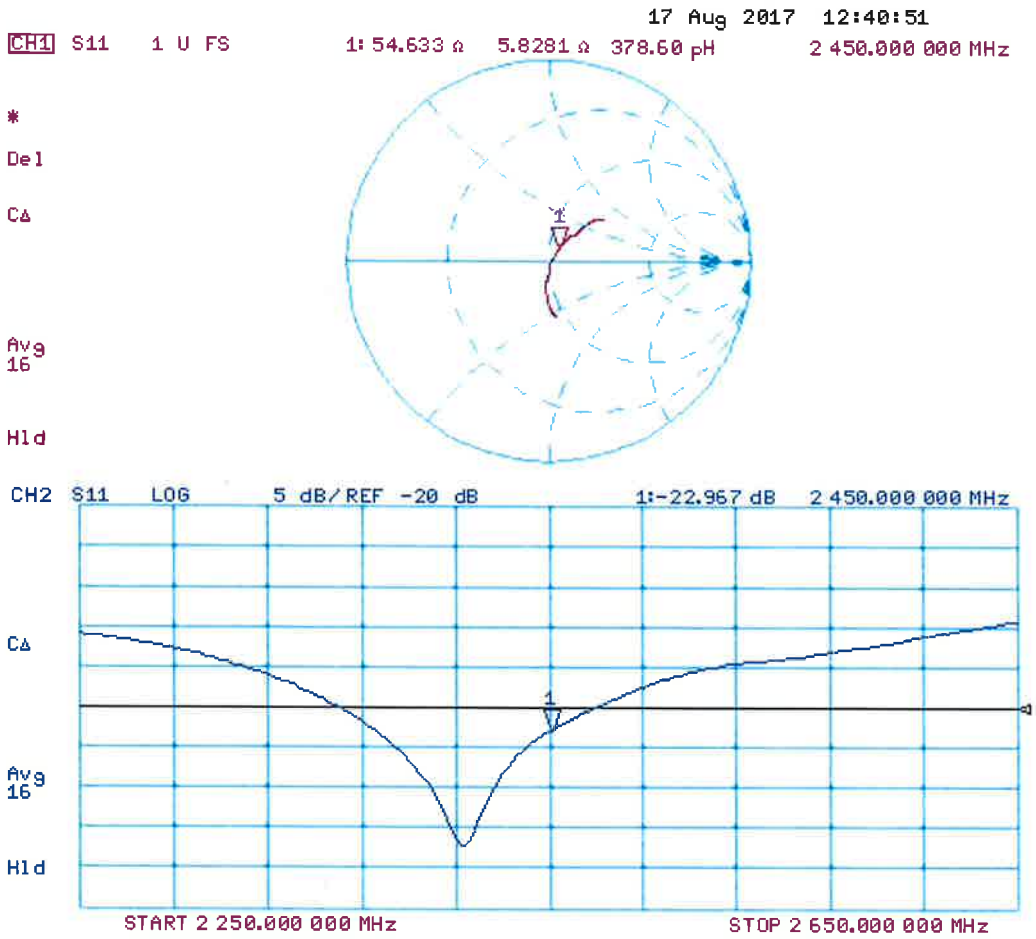

DASY5 Validation Report for Body TSL

Date: 17.08.2017

Test Laboratory: SPEAG, Zurich, Switzerland

DUT: Dipole 2450 MHz; Type: D2450V2; Serial: D2450V2 - SN: 737

Communication System: UID 0 - CW; Frequency: 2450 MHz
Medium parameters used: f = 2450 MHz; σ = 2.03 S/m; ε_r = 51.9; ρ = 1000 kg/m^3
Phantom section: Flat Section
Measurement Standard: DASY5 (IEEE/IEC/ANSI C63.19-2011)

DASY52 Configuration:

- Probe: EX3DV4 - SN7349; ConvF(8.1, 8.1, 8.1); Calibrated: 31.05.2017;
- Sensor-Surface: 1.4mm (Mechanical Surface Detection)
- Electronics: DAE4 Sn601; Calibrated: 28.03.2017
- Phantom: Flat Phantom 5.0 (back); Type: QD 000 P50 AA; Serial: 1002
- DASY52 52.10.0(1446); SEMCAD X 14.6.10(7417)

Dipole Calibration for Body Tissue/Pin=250 mW, d=10mm/Zoom Scan (7x7x7)/Cube 0:

Measurement grid: dx=5mm, dy=5mm, dz=5mm
Reference Value = 101.9 V/m; Power Drift = -0.08 dB
Peak SAR (extrapolated) = 25.0 W/kg
SAR(1 g) = 12.7 W/kg; SAR(10 g) = 5.92 W/kg
Maximum value of SAR (measured) = 19.8 W/kg

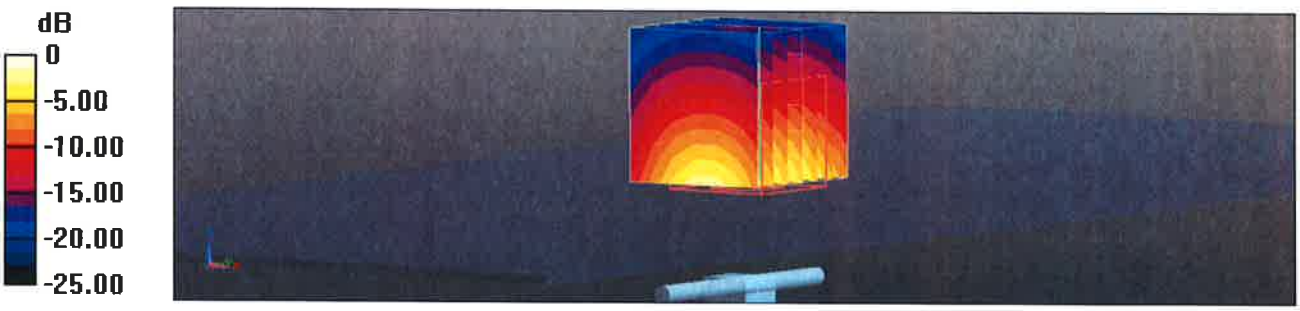

0 dB = 19.8 W/kg = 12.97 dBW/kg

Impedance Measurement Plot for Body TSL

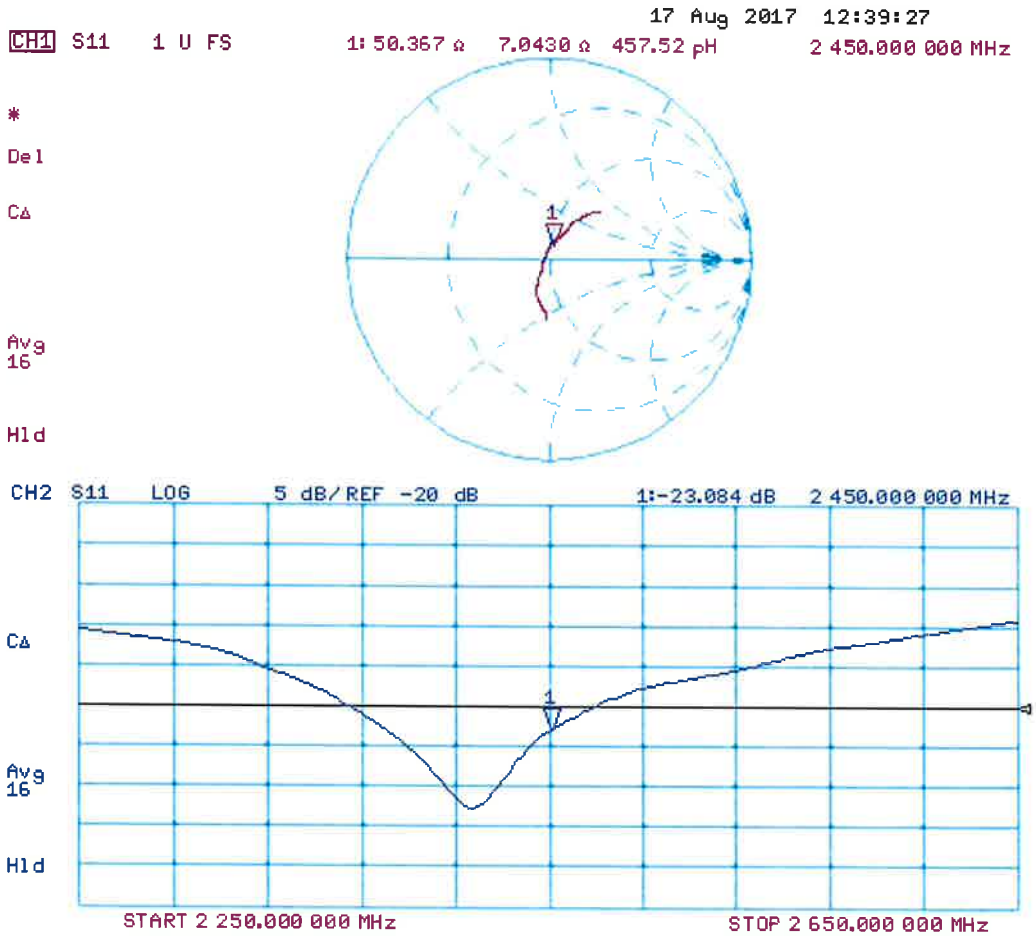

Calibration Laboratory of
Schmid & Partner
Engineering AG
Zeughausstrasse 43, 8004 Zurich, Switzerland

S Schweizerischer Kalibrierdienst
C Service suisse d'étalonnage
Servizio svizzero di taratura
S Swiss Calibration Service

Accredited by the Swiss Accreditation Service (SAS)
The Swiss Accreditation Service is one of the signatories to the EA Multilateral Agreement for the recognition of calibration certificates

Accreditation No.: SCS 0108

Client **B.V. ADT (Auden)**

Certificate No: D5GHzV2-1019_Aug17

CALIBRATION CERTIFICATE

Object	D5GHzV2 - SN:1019
Calibration procedure(s)	QA CAL-22.v2 Calibration procedure for dipole validation kits between 3-6 GHz
Calibration date:	August 23, 2017

This calibration certificate documents the traceability to national standards, which realize the physical units of measurements (SI).
The measurements and the uncertainties with confidence probability are given on the following pages and are part of the certificate.

All calibrations have been conducted in the closed laboratory facility: environment temperature (22 ± 3)°C and humidity < 70%.

Calibration Equipment used (M&TE critical for calibration)

Primary Standards	ID #	Cal Date (Certificate No.)	Scheduled Calibration
Power meter NRP	SN: 104778	04-Apr-17 (No. 217-02521/02522)	Apr-18
Power sensor NRP-Z91	SN: 103244	04-Apr-17 (No. 217-02521)	Apr-18
Power sensor NRP-Z91	SN: 103245	04-Apr-17 (No. 217-02522)	Apr-18
Reference 20 dB Attenuator	SN: 5058 (20k)	07-Apr-17 (No. 217-02528)	Apr-18
Type-N mismatch combination	SN: 5047.2 / 06327	07-Apr-17 (No. 217-02529)	Apr-18
Reference Probe EX3DV4	SN: 3503	31-Dec-16 (No. EX3-3503_Dec16)	Dec-17
DAE4	SN: 601	28-Mar-17 (No. DAE4-601_Mar17)	Mar-18

Secondary Standards	ID #	Check Date (in house)	Scheduled Check
Power meter EPM-442A	SN: GB37480704	07-Oct-15 (in house check Oct-16)	In house check: Oct-18
Power sensor HP 8481A	SN: US37292783	07-Oct-15 (in house check Oct-16)	In house check: Oct-18
Power sensor HP 8481A	SN: MY41092317	07-Oct-15 (in house check Oct-16)	In house check: Oct-18
RF generator R&S SMT-06	SN: 100972	15-Jun-15 (in house check Oct-16)	In house check: Oct-18
Network Analyzer HP 8753E	SN: US37390585	18-Oct-01 (in house check Oct-16)	In house check: Oct-17

	Name	Function	Signature
Calibrated by:	Claudio Leubler	Laboratory Technician	
Approved by:	Katja Pokovic	Technical Manager	

Issued: August 23, 2017

This calibration certificate shall not be reproduced except in full without written approval of the laboratory.

Glossary:

TSL	tissue simulating liquid
ConvF	sensitivity in TSL / NORM x,y,z
N/A	not applicable or not measured

Calibration is Performed According to the Following Standards:

a) IEEE Std 1528-2013, "IEEE Recommended Practice for Determining the Peak Spatial-Averaged Specific Absorption Rate (SAR) in the Human Head from Wireless Communications Devices: Measurement Techniques", June 2013
b) IEC 62209-1, "Measurement procedure for the assessment of Specific Absorption Rate (SAR) from hand-held and body-mounted devices used next to the ear (frequency range of 300 MHz to 6 GHz)", July 2016
c) IEC 62209-2, "Procedure to determine the Specific Absorption Rate (SAR) for wireless communication devices used in close proximity to the human body (frequency range of 30 MHz to 6 GHz)", March 2010
d) KDB 865664, "SAR Measurement Requirements for 100 MHz to 6 GHz"

Additional Documentation:

e) DASY4/5 System Handbook

Methods Applied and Interpretation of Parameters:

- *Measurement Conditions:* Further details are available from the Validation Report at the end of the certificate. All figures stated in the certificate are valid at the frequency indicated.
- *Antenna Parameters with TSL:* The dipole is mounted with the spacer to position its feed point exactly below the center marking of the flat phantom section, with the arms oriented parallel to the body axis.
- *Feed Point Impedance and Return Loss:* These parameters are measured with the dipole positioned under the liquid filled phantom. The impedance stated is transformed from the measurement at the SMA connector to the feed point. The Return Loss ensures low reflected power. No uncertainty required.
- *Electrical Delay:* One-way delay between the SMA connector and the antenna feed point. No uncertainty required.
- *SAR measured:* SAR measured at the stated antenna input power.
- *SAR normalized:* SAR as measured, normalized to an input power of 1 W at the antenna connector.
- *SAR for nominal TSL parameters:* The measured TSL parameters are used to calculate the nominal SAR result.

The reported uncertainty of measurement is stated as the standard uncertainty of measurement multiplied by the coverage factor k=2, which for a normal distribution corresponds to a coverage probability of approximately 95%.

Measurement Conditions

DASY system configuration, as far as not given on page 1.

DASY Version	DASY5	V52.10.0
Extrapolation	Advanced Extrapolation	
Phantom	Modular Flat Phantom V5.0	
Distance Dipole Center - TSL	10 mm	with Spacer
Zoom Scan Resolution	dx, dy = 4.0 mm, dz = 1.4 mm	Graded Ratio = 1.4 (Z direction)
Frequency	5250 MHz ± 1 MHz 5600 MHz ± 1 MHz 5800 MHz ± 1 MHz	

Head TSL parameters at 5250 MHz

The following parameters and calculations were applied.

	Temperature	**Permittivity**	**Conductivity**
Nominal Head TSL parameters	22.0 °C	35.9	4.71 mho/m
Measured Head TSL parameters	(22.0 ± 0.2) °C	36.3 ± 6 %	4.54 mho/m ± 6 %
Head TSL temperature change during test	< 0.5 °C	----	----

SAR result with Head TSL at 5250 MHz

SAR averaged over 1 cm^3 (1 g) of Head TSL	Condition	
SAR measured	100 mW input power	7.85 W/kg
SAR for nominal Head TSL parameters	normalized to 1W	**78.6 W/kg ± 19.9 % (k=2)**

SAR averaged over 10 cm^3 (10 g) of Head TSL	condition	
SAR measured	100 mW input power	2.23 W/kg
SAR for nominal Head TSL parameters	normalized to 1W	**22.3 W/kg ± 19.5 % (k=2)**

Head TSL parameters at 5600 MHz

The following parameters and calculations were applied.

	Temperature	Permittivity	Conductivity
Nominal Head TSL parameters	22.0 °C	35.5	5.07 mho/m
Measured Head TSL parameters	(22.0 ± 0.2) °C	35.8 ± 6 %	4.91 mho/m ± 6 %
Head TSL temperature change during test	< 0.5 °C	----	----

SAR result with Head TSL at 5600 MHz

SAR averaged over 1 cm³ (1 g) of Head TSL	Condition	
SAR measured	100 mW input power	8.37 W/kg
SAR for nominal Head TSL parameters	normalized to 1W	**83.7 W / kg ± 19.9 % (k=2)**

SAR averaged over 10 cm³ (10 g) of Head TSL	condition	
SAR measured	100 mW input power	2.38 W/kg
SAR for nominal Head TSL parameters	normalized to 1W	**23.8 W/kg ± 19.5 % (k=2)**

Head TSL parameters at 5800 MHz

The following parameters and calculations were applied.

	Temperature	Permittivity	Conductivity
Nominal Head TSL parameters	22.0 °C	35.3	5.27 mho/m
Measured Head TSL parameters	(22.0 ± 0.2) °C	35.5 ± 6 %	5.11 mho/m ± 6 %
Head TSL temperature change during test	< 0.5 °C	----	----

SAR result with Head TSL at 5800 MHz

SAR averaged over 1 cm³ (1 g) of Head TSL	Condition	
SAR measured	100 mW input power	7.97 W/kg
SAR for nominal Head TSL parameters	normalized to 1W	**79.7 W/kg ± 19.9 % (k=2)**

SAR averaged over 10 cm³ (10 g) of Head TSL	condition	
SAR measured	100 mW input power	2.26 W/kg
SAR for nominal Head TSL parameters	normalized to 1W	**22.6 W/kg ± 19.5 % (k=2)**

Body TSL parameters at 5250 MHz

The following parameters and calculations were applied.

	Temperature	Permittivity	Conductivity
Nominal Body TSL parameters	22.0 °C	48.9	5.36 mho/m
Measured Body TSL parameters	(22.0 ± 0.2) °C	47.0 ± 6 %	5.46 mho/m ± 6 %
Body TSL temperature change during test	< 0.5 °C	----	----

SAR result with Body TSL at 5250 MHz

SAR averaged over 1 cm³ (1 g) of Body TSL	Condition	
SAR measured	100 mW input power	7.71 W/kg
SAR for nominal Body TSL parameters	normalized to 1W	**76.5 W/kg ± 19.9 % (k=2)**

SAR averaged over 10 cm³ (10 g) of Body TSL	condition	
SAR measured	100 mW input power	2.15 W/kg
SAR for nominal Body TSL parameters	normalized to 1W	**21.3 W/kg ± 19.5 % (k=2)**

Body TSL parameters at 5600 MHz

The following parameters and calculations were applied.

	Temperature	Permittivity	Conductivity
Nominal Body TSL parameters	22.0 °C	48.5	5.77 mho/m
Measured Body TSL parameters	(22.0 ± 0.2) °C	46.4 ± 6 %	5.93 mho/m ± 6 %
Body TSL temperature change during test	< 0.5 °C	----	----

SAR result with Body TSL at 5600 MHz

SAR averaged over 1 cm³ (1 g) of Body TSL	Condition	
SAR measured	100 mW input power	8.03 W/kg
SAR for nominal Body TSL parameters	normalized to 1W	**79.7 W/kg ± 19.9 % (k=2)**

SAR averaged over 10 cm³ (10 g) of Body TSL	condition	
SAR measured	100 mW input power	2.25 W/kg
SAR for nominal Body TSL parameters	normalized to 1W	**22.3 W/kg ± 19.5 % (k=2)**

Body TSL parameters at 5800 MHz

The following parameters and calculations were applied.

	Temperature	Permittivity	Conductivity
Nominal Body TSL parameters	22.0 °C	48.2	6.00 mho/m
Measured Body TSL parameters	(22.0 ± 0.2) °C	46.1 ± 6 %	6.20 mho/m ± 6 %
Body TSL temperature change during test	< 0.5 °C	----	----

SAR result with Body TSL at 5800 MHz

SAR averaged over 1 cm^3 (1 g) of Body TSL	Condition	
SAR measured	100 mW input power	7.75 W/kg
SAR for nominal Body TSL parameters	normalized to 1W	**76.9 W/kg ± 19.9 % (k=2)**

SAR averaged over 10 cm^3 (10 g) of Body TSL	condition	
SAR measured	100 mW input power	2.15 W/kg
SAR for nominal Body TSL parameters	normalized to 1W	**21.3 W/kg ± 19.5 % (k=2)**

Appendix (Additional assessments outside the scope of SCS 0108)

Antenna Parameters with Head TSL at 5250 MHz

Impedance, transformed to feed point	52.6 Ω - 6.7 jΩ
Return Loss	- 23.1 dB

Antenna Parameters with Head TSL at 5600 MHz

Impedance, transformed to feed point	55.6 Ω - 1.4 jΩ
Return Loss	- 25.2 dB

Antenna Parameters with Head TSL at 5800 MHz

Impedance, transformed to feed point	57.2 Ω + 4.0 jΩ
Return Loss	- 22.3 dB

Antenna Parameters with Body TSL at 5250 MHz

Impedance, transformed to feed point	52.3 Ω - 3.7 jΩ
Return Loss	- 27.5 dB

Antenna Parameters with Body TSL at 5600 MHz

Impedance, transformed to feed point	58.6 Ω - 0.6 jΩ
Return Loss	- 22.0 dB

Antenna Parameters with Body TSL at 5800 MHz

Impedance, transformed to feed point	55.8 Ω + 3.8 jΩ
Return Loss	- 23.7 dB

General Antenna Parameters and Design

Electrical Delay (one direction)	1.204 ns

After long term use with 100W radiated power, only a slight warming of the dipole near the feedpoint can be measured.

The dipole is made of standard semirigid coaxial cable. The center conductor of the feeding line is directly connected to the second arm of the dipole. The antenna is therefore short-circuited for DC-signals. On some of the dipoles, small end caps are added to the dipole arms in order to improve matching when loaded according to the position as explained in the "Measurement Conditions" paragraph. The SAR data are not affected by this change. The overall dipole length is still according to the Standard.
No excessive force must be applied to the dipole arms, because they might bend or the soldered connections near the feedpoint may be damaged.

Additional EUT Data

Manufactured by	SPEAG
Manufactured on	February 05, 2004

DASY5 Validation Report for Head TSL

Date: 23.08.2017

Test Laboratory: SPEAG, Zurich, Switzerland

DUT: Dipole D5GHzV2; Type: D5GHzV2; Serial: D5GHzV2 - SN: 1019

Communication System: UID 0 - CW; Frequency: 5250 MHz, Frequency: 5600 MHz, Frequency: 5800 MHz
Medium parameters used: f = 5250 MHz; σ = 4.54 S/m; ε_r = 36.3; ρ = 1000 kg/m^3 ,
Medium parameters used: f = 5600 MHz; σ = 4.91 S/m; ε_r = 35.8; ρ = 1000 kg/m^3 ,
Medium parameters used: f = 5800 MHz; σ = 5.11 S/m; ε_r = 35.5; ρ = 1000 kg/m^3
Phantom section: Flat Section
Measurement Standard: DASY5 (IEEE/IEC/ANSI C63.19-2011)

DASY52 Configuration:

- Probe: EX3DV4 - SN3503; ConvF(5.58, 5.58, 5.58); Calibrated: 31.12.2016, ConvF(5.09, 5.09, 5.09); Calibrated: 31.12.2016, ConvF(5.01, 5.01, 5.01); Calibrated: 31.12.2016;
- Sensor-Surface: 1.4mm (Mechanical Surface Detection)
- Electronics: DAE4 Sn601; Calibrated: 28.03.2017
- Phantom: Flat Phantom 5.0 (front); Type: QD 000 P50 AA; Serial: 1001
- DASY52 52.10.0(1446); SEMCAD X 14.6.10(7417)

Dipole Calibration for Head Tissue/Pin=100mW, dist=10mm, f=5250 MHz/Zoom Scan, dist=1.4mm (8x8x7)/Cube 0: Measurement grid: dx=4mm, dy=4mm, dz=1.4mm
Reference Value = 69.55 V/m; Power Drift = -0.02 dB
Peak SAR (extrapolated) = 28.9 W/kg
SAR(1 g) = 7.85 W/kg; SAR(10 g) = 2.23 W/kg
Maximum value of SAR (measured) = 17.8 W/kg

Dipole Calibration for Head Tissue/Pin=100mW, dist=10mm, f=5600 MHz/Zoom Scan, dist=1.4mm (8x8x7)/Cube 0: Measurement grid: dx=4mm, dy=4mm, dz=1.4mm
Reference Value = 70.84 V/m; Power Drift = -0.01 dB
Peak SAR (extrapolated) = 32.6 W/kg
SAR(1 g) = 8.37 W/kg; SAR(10 g) = 2.38 W/kg
Maximum value of SAR (measured) = 19.4 W/kg

Dipole Calibration for Head Tissue/Pin=100mW, dist=10mm, f=5800 MHz/Zoom Scan, dist=1.4mm (8x8x7)/Cube 0: Measurement grid: dx=4mm, dy=4mm, dz=1.4mm
Reference Value = 68.05 V/m; Power Drift = -0.06 dB
Peak SAR (extrapolated) = 32.3 W/kg
SAR(1 g) = 7.97 W/kg; SAR(10 g) = 2.26 W/kg
Maximum value of SAR (measured) = 18.8 W/kg

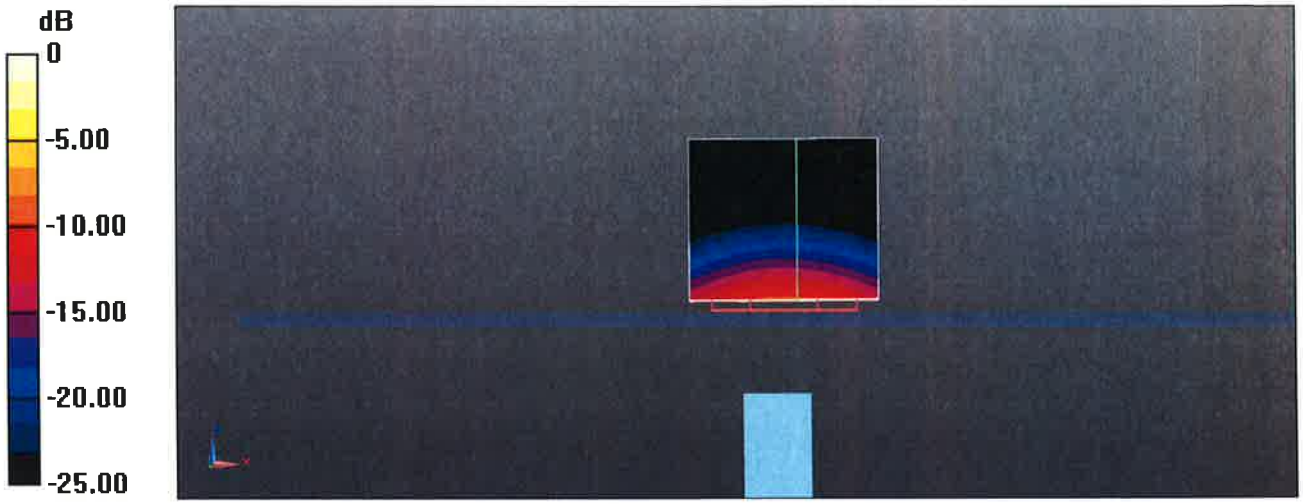

0 dB = 18.8 W/kg = 12.74 dBW/kg

Impedance Measurement Plot for Head TSL

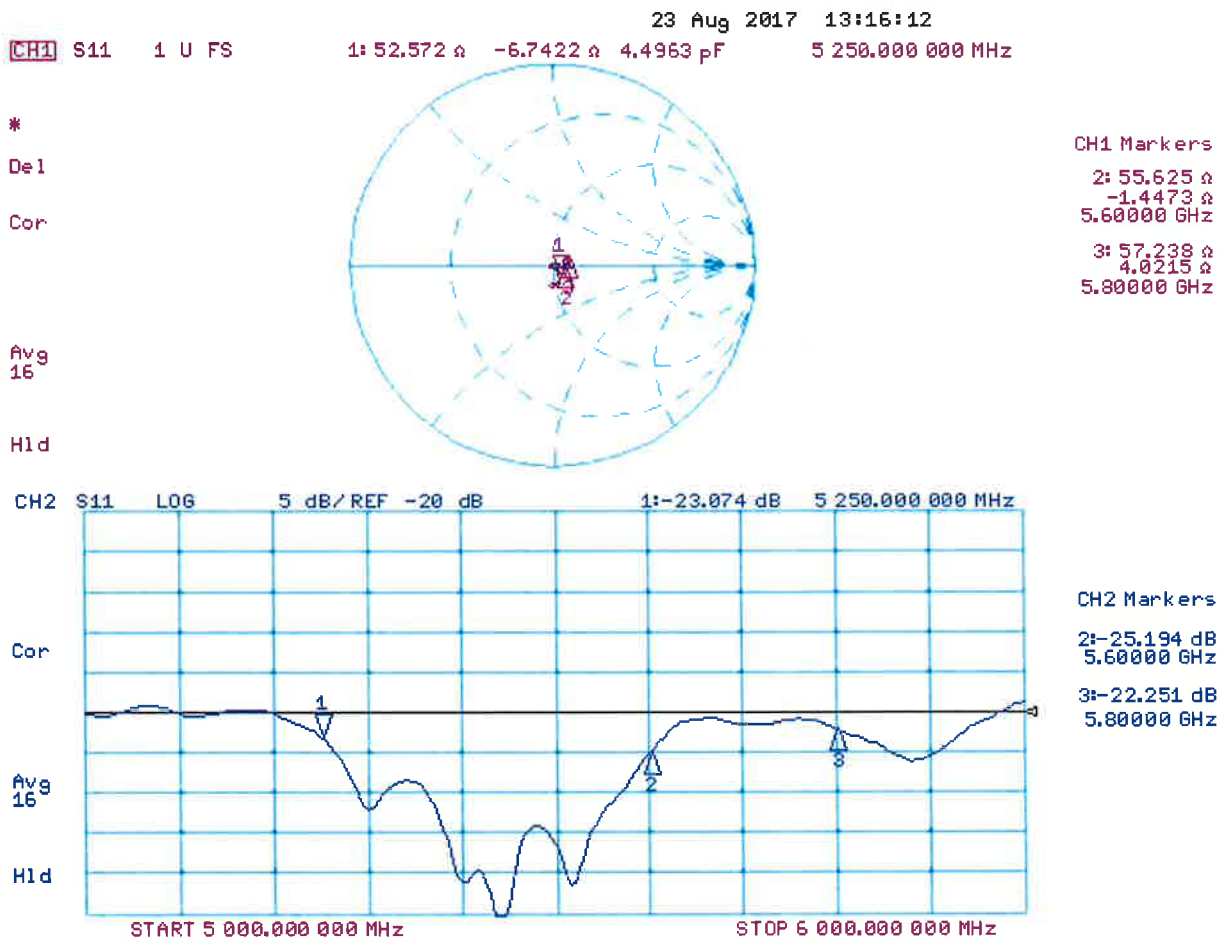

DASY5 Validation Report for Body TSL

Date: 22.08.2017

Test Laboratory: SPEAG, Zurich, Switzerland

DUT: Dipole D5GHzV2; Type: D5GHzV2; Serial: D5GHzV2 - SN: 1019

Communication System: UID 0 - CW; Frequency: 5250 MHz, Frequency: 5600 MHz, Frequency: 5800 MHz
Medium parameters used: f = 5250 MHz; σ = 5.46 S/m; ε_r = 47; ρ = 1000 kg/m^3 ,
Medium parameters used: f = 5600 MHz; σ = 5.93 S/m; ε_r = 46.4; ρ = 1000 kg/m^3 ,
Medium parameters used: f = 5800 MHz; σ = 6.2 S/m; ε_r = 46.1; ρ = 1000 kg/m^3
Phantom section: Flat Section
Measurement Standard: DASY5 (IEEE/IEC/ANSI C63.19-2011)

DASY52 Configuration:

- Probe: EX3DV4 - SN3503; ConvF(5.14, 5.14, 5.14); Calibrated: 31.12.2016, ConvF(4.57, 4.57, 4.57); Calibrated: 31.12.2016, ConvF(4.48, 4.48, 4.48); Calibrated: 31.12.2016;
- Sensor-Surface: 1.4mm (Mechanical Surface Detection)
- Electronics: DAE4 Sn601; Calibrated: 28.03.2017
- Phantom: Flat Phantom 5.0 (back); Type: QD 000 P50 AA; Serial: 1002
- DASY52 52.10.0(1446); SEMCAD X 14.6.10(7417)

Dipole Calibration for Body Tissue/Pin=100mW, dist=10mm, f=5250 MHz/Zoom Scan, dist=1.4mm (8x8x7)/Cube 0: Measurement grid: dx=4mm, dy=4mm, dz=1.4mm
Reference Value = 65.69 V/m; Power Drift = -0.09 dB
Peak SAR (extrapolated) = 29.9 W/kg
SAR(1 g) = 7.71 W/kg; SAR(10 g) = 2.15 W/kg
Maximum value of SAR (measured) = 18.1 W/kg

Dipole Calibration for Body Tissue/Pin=100mW, dist=10mm, f=5600 MHz/Zoom Scan, dist=1.4mm (8x8x7)/Cube 0: Measurement grid: dx=4mm, dy=4mm, dz=1.4mm
Reference Value = 65.85 V/m; Power Drift = -0.07 dB
Peak SAR (extrapolated) = 33.8 W/kg
SAR(1 g) = 8.03 W/kg; SAR(10 g) = 2.25 W/kg
Maximum value of SAR (measured) = 19.5 W/kg

Dipole Calibration for Body Tissue/Pin=100mW, dist=10mm, f=5800 MHz/Zoom Scan, dist=1.4mm (8x8x7)/Cube 0: Measurement grid: dx=4mm, dy=4mm, dz=1.4mm
Reference Value = 63.75 V/m; Power Drift = -0.07 dB
Peak SAR (extrapolated) = 34.6 W/kg
SAR(1 g) = 7.75 W/kg; SAR(10 g) = 2.15 W/kg
Maximum value of SAR (measured) = 19.1 W/kg

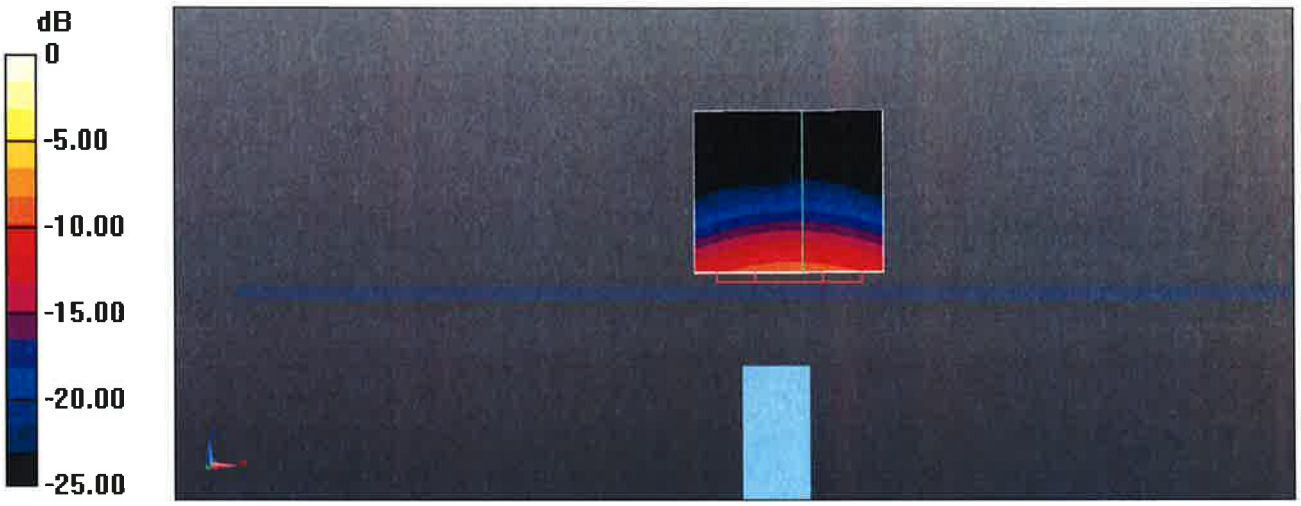

0 dB = 18.1 W/kg = 12.58 dBW/kg

Impedance Measurement Plot for Body TSL

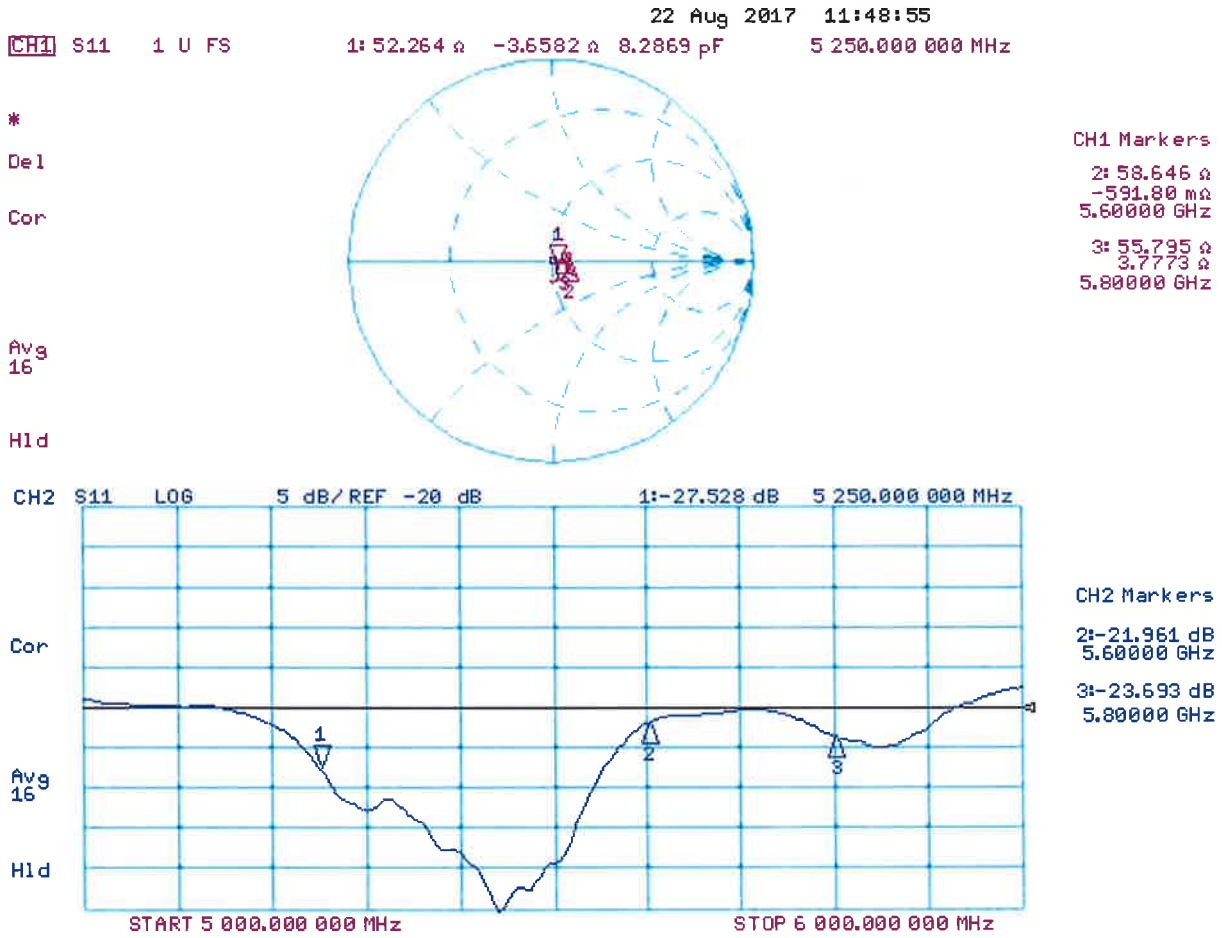

Calibration Laboratory of
Schmid & Partner
Engineering AG
Zeughausstrasse 43, 8004 Zurich, Switzerland

S Schweizerischer Kalibrierdienst
C Service suisse d'étalonnage
S Servizio svizzero di taratura
Swiss Calibration Service

Accredited by the Swiss Accreditation Service (SAS)
The Swiss Accreditation Service is one of the signatories to the EA Multilateral Agreement for the recognition of calibration certificates

Accreditation No.: SCS 0108

Client **B.V.ADT (Auden)**

Certificate No: EX3-3971_Mar17

CALIBRATION CERTIFICATE

Object	EX3DV4 - SN:3971
Calibration procedure(s)	QA CAL-01.v9, QA CAL-12.v9, QA CAL-14.v4, QA CAL-23.v5, QA CAL-25.v6 Calibration procedure for dosimetric E-field probes
Calibration date:	March 24, 2017

This calibration certificate documents the traceability to national standards, which realize the physical units of measurements (SI).
The measurements and the uncertainties with confidence probability are given on the following pages and are part of the certificate.

All calibrations have been conducted in the closed laboratory facility: environment temperature (22 ± 3)°C and humidity < 70%.

Calibration Equipment used (M&TE critical for calibration)

Primary Standards	ID	Cal Date (Certificate No.)	Scheduled Calibration
Power meter NRP	SN: 104778	06-Apr-16 (No. 217-02288/02289)	Apr-17
Power sensor NRP-Z91	SN: 103244	06-Apr-16 (No. 217-02288)	Apr-17
Power sensor NRP-Z91	SN: 103245	06-Apr-16 (No. 217-02289)	Apr-17
Reference 20 dB Attenuator	SN: S5277 (20x)	05-Apr-16 (No. 217-02293)	Apr-17
Reference Probe ES3DV2	SN: 3013	31-Dec-16 (No. ES3-3013_Dec16)	Dec-17
DAE4	SN: 660	7-Dec-16 (No. DAE4-660_Dec16)	Dec-17
Secondary Standards	ID	Check Date (in house)	Scheduled Check
Power meter E4419B	SN: GB41293874	06-Apr-16 (in house check Jun-16)	In house check: Jun-18
Power sensor E4412A	SN: MY41498087	06-Apr-16 (in house check Jun-16)	In house check: Jun-18
Power sensor E4412A	SN: 000110210	06-Apr-16 (in house check Jun-16)	In house check: Jun-18
RF generator HP 8648C	SN: US3642U01700	04-Aug-99 (in house check Jun-16)	In house check: Jun-18
Network Analyzer HP 8753E	SN: US37390585	18-Oct-01 (in house check Oct-16)	In house check: Oct-17

	Name	Function	Signature
Calibrated by:	Jeton Kastrati	Laboratory Technician	
Approved by:	Katja Pokovic	Technical Manager	

Issued: March 24, 2017

This calibration certificate shall not be reproduced except in full without written approval of the laboratory.

Glossary:

TSL	tissue simulating liquid
NORMx,y,z	sensitivity in free space
ConvF	sensitivity in TSL / NORMx,y,z
DCP	diode compression point
CF	crest factor (1/duty_cycle) of the RF signal
A, B, C, D	modulation dependent linearization parameters
Polarization φ	φ rotation around probe axis
Polarization ϑ	ϑ rotation around an axis that is in the plane normal to probe axis (at measurement center), i.e., ϑ = 0 is normal to probe axis
Connector Angle	information used in DASY system to align probe sensor X to the robot coordinate system

Calibration is Performed According to the Following Standards:

a) IEEE Std 1528-2013, "IEEE Recommended Practice for Determining the Peak Spatial-Averaged Specific Absorption Rate (SAR) in the Human Head from Wireless Communications Devices: Measurement Techniques", June 2013
b) IEC 62209-1, "Procedure to measure the Specific Absorption Rate (SAR) for hand-held devices used in close proximity to the ear (frequency range of 300 MHz to 3 GHz)", February 2005
c) IEC 62209-2, "Procedure to determine the Specific Absorption Rate (SAR) for wireless communication devices used in close proximity to the human body (frequency range of 30 MHz to 6 GHz)", March 2010
d) KDB 865664, "SAR Measurement Requirements for 100 MHz to 6 GHz"

Methods Applied and Interpretation of Parameters:

- *NORMx,y,z:* Assessed for E-field polarization ϑ = 0 (f ≤ 900 MHz in TEM-cell; f > 1800 MHz: R22 waveguide). NORMx,y,z are only intermediate values, i.e., the uncertainties of NORMx,y,z does not affect the E^2-field uncertainty inside TSL (see below *ConvF*).
- *NORM(f)x,y,z = NORMx,y,z * frequency_response* (see Frequency Response Chart). This linearization is implemented in DASY4 software versions later than 4.2. The uncertainty of the frequency response is included in the stated uncertainty of *ConvF*.
- *DCPx,y,z:* DCP are numerical linearization parameters assessed based on the data of power sweep with CW signal (no uncertainty required). DCP does not depend on frequency nor media.
- *PAR:* PAR is the Peak to Average Ratio that is not calibrated but determined based on the signal characteristics
- *Ax,y,z; Bx,y,z; Cx,y,z; Dx,y,z; VRx,y,z: A, B, C, D* are numerical linearization parameters assessed based on the data of power sweep for specific modulation signal. The parameters do not depend on frequency nor media. *VR* is the maximum calibration range expressed in RMS voltage across the diode.
- *ConvF and Boundary Effect Parameters:* Assessed in flat phantom using E-field (or Temperature Transfer Standard for f ≤ 800 MHz) and inside waveguide using analytical field distributions based on power measurements for f > 800 MHz. The same setups are used for assessment of the parameters applied for boundary compensation (alpha, depth) of which typical uncertainty values are given. These parameters are used in DASY4 software to improve probe accuracy close to the boundary. The sensitivity in TSL corresponds to *NORMx,y,z * ConvF* whereby the uncertainty corresponds to that given for *ConvF*. A frequency dependent *ConvF* is used in DASY version 4.4 and higher which allows extending the validity from ± 50 MHz to ± 100 MHz.
- *Spherical isotropy (3D deviation from isotropy)*: in a field of low gradients realized using a flat phantom exposed by a patch antenna.
- *Sensor Offset*: The sensor offset corresponds to the offset of virtual measurement center from the probe tip (on probe axis). No tolerance required.
- *Connector Angle*: The angle is assessed using the information gained by determining the *NORMx* (no uncertainty required).

Probe EX3DV4

SN:3971

Manufactured: December 30, 2013
Calibrated: March 24, 2017

Calibrated for DASY/EASY Systems
(Note: non-compatible with DASY2 system!)

DASY/EASY - Parameters of Probe: EX3DV4 - SN:3971

Basic Calibration Parameters

	Sensor X	Sensor Y	Sensor Z	Unc (k=2)
Norm ($\mu V/(V/m)^2$)[A]	0.40	0.50	0.48	± 10.1 %
DCP (mV)[B]	101.4	99.2	100.2	

Modulation Calibration Parameters

UID	Communication System Name		A dB	B dB$\sqrt{\mu V}$	C	D dB	VR mV	Unc[E] (k=2)
0	CW	X	0.0	0.0	1.0	0.00	156.0	±3.0 %
		Y	0.0	0.0	1.0		141.4	
		Z	0.0	0.0	1.0		141.6	

The reported uncertainty of measurement is stated as the standard uncertainty of measurement multiplied by the coverage factor k=2, which for a normal distribution corresponds to a coverage probability of approximately 95%.

[A] The uncertainties of Norm X,Y,Z do not affect the E^2-field uncertainty inside TSL (see Pages 5 and 6).
[B] Numerical linearization parameter: uncertainty not required.
[E] Uncertainty is determined using the max. deviation from linear response applying rectangular distribution and is expressed for the square of the field value.

DASY/EASY - Parameters of Probe: EX3DV4 - SN:3971

Calibration Parameter Determined in Head Tissue Simulating Media

f (MHz) [C]	Relative Permittivity [F]	Conductivity (S/m) [F]	ConvF X	ConvF Y	ConvF Z	Alpha [G]	Depth [G] (mm)	Unc (k=2)
6	55.5	0.75	21.45	21.45	21.45	0.00	1.00	± 13.3 %
13	55.5	0.75	18.18	18.18	18.18	0.00	1.00	± 13.3 %
750	41.9	0.89	10.91	10.91	10.91	0.46	0.95	± 12.0 %
835	41.5	0.90	10.67	10.67	10.67	0.40	0.95	± 12.0 %
900	41.5	0.97	10.51	10.51	10.51	0.46	0.85	± 12.0 %
1450	40.5	1.20	8.99	8.99	8.99	0.30	0.90	± 12.0 %
1640	40.2	1.31	8.94	8.94	8.94	0.36	0.80	± 12.0 %
1750	40.1	1.37	8.92	8.92	8.92	0.34	0.81	± 12.0 %
1900	40.0	1.40	8.59	8.59	8.59	0.33	0.84	± 12.0 %
2000	40.0	1.40	8.54	8.54	8.54	0.33	0.84	± 12.0 %
2300	39.5	1.67	8.12	8.12	8.12	0.29	0.84	± 12.0 %
2450	39.2	1.80	7.77	7.77	7.77	0.35	0.80	± 12.0 %
2600	39.0	1.96	7.59	7.59	7.59	0.39	0.80	± 12.0 %
5250	35.9	4.71	5.34	5.34	5.34	0.35	1.80	± 13.1 %
5500	35.6	4.96	5.14	5.14	5.14	0.40	1.80	± 13.1 %
5600	35.5	5.07	4.96	4.96	4.96	0.40	1.80	± 13.1 %
5800	35.3	5.27	4.98	4.98	4.98	0.40	1.80	± 13.1 %

[C] Frequency validity above 300 MHz of ± 100 MHz only applies for DASY v4.4 and higher (see Page 2), else it is restricted to ± 50 MHz. The uncertainty is the RSS of the ConvF uncertainty at calibration frequency and the uncertainty for the indicated frequency band. Frequency validity below 300 MHz is ± 10, 25, 40, 50 and 70 MHz for ConvF assessments at 30, 64, 128, 150 and 220 MHz respectively. Above 5 GHz frequency validity can be extended to ± 110 MHz.

[F] At frequencies below 3 GHz, the validity of tissue parameters (ε and σ) can be relaxed to ± 10% if liquid compensation formula is applied to measured SAR values. At frequencies above 3 GHz, the validity of tissue parameters (ε and σ) is restricted to ± 5%. The uncertainty is the RSS of the ConvF uncertainty for indicated target tissue parameters.

[G] Alpha/Depth are determined during calibration. SPEAG warrants that the remaining deviation due to the boundary effect after compensation is always less than ± 1% for frequencies below 3 GHz and below ± 2% for frequencies between 3-6 GHz at any distance larger than half the probe tip diameter from the boundary.

DASY/EASY - Parameters of Probe: EX3DV4 - SN:3971

Calibration Parameter Determined in Body Tissue Simulating Media

f (MHz) [C]	Relative Permittivity [F]	Conductivity (S/m) [F]	ConvF X	ConvF Y	ConvF Z	Alpha [G]	Depth [G] (mm)	Unc (k=2)
750	55.5	0.96	10.61	10.61	10.61	0.49	0.80	± 12.0 %
835	55.2	0.97	10.52	10.52	10.52	0.44	0.80	± 12.0 %
900	55.0	1.05	10.48	10.48	10.48	0.47	0.82	± 12.0 %
1450	54.0	1.30	8.80	8.80	8.80	0.33	0.80	± 12.0 %
1640	53.7	1.42	8.73	8.73	8.73	0.40	0.80	± 12.0 %
1750	53.4	1.49	8.51	8.51	8.51	0.34	0.89	± 12.0 %
1900	53.3	1.52	8.26	8.26	8.26	0.27	0.95	± 12.0 %
2000	53.3	1.52	8.43	8.43	8.43	0.33	0.88	± 12.0 %
2300	52.9	1.81	7.85	7.85	7.85	0.36	0.80	± 12.0 %
2450	52.7	1.95	7.67	7.67	7.67	0.30	0.85	± 12.0 %
2600	52.5	2.16	7.32	7.32	7.32	0.21	0.99	± 12.0 %
5250	48.9	5.36	4.70	4.70	4.70	0.45	1.90	± 13.1 %
5500	48.6	5.65	4.32	4.32	4.32	0.50	1.90	± 13.1 %
5600	48.5	5.77	4.10	4.10	4.10	0.50	1.90	± 13.1 %
5800	48.2	6.00	4.22	4.22	4.22	0.50	1.90	± 13.1 %

[C] Frequency validity above 300 MHz of ± 100 MHz only applies for DASY v4.4 and higher (see Page 2), else it is restricted to ± 50 MHz. The uncertainty is the RSS of the ConvF uncertainty at calibration frequency and the uncertainty for the indicated frequency band. Frequency validity below 300 MHz is ± 10, 25, 40, 50 and 70 MHz for ConvF assessments at 30, 64, 128, 150 and 220 MHz respectively. Above 5 GHz frequency validity can be extended to ± 110 MHz.

[F] At frequencies below 3 GHz, the validity of tissue parameters (ε and σ) can be relaxed to ± 10% if liquid compensation formula is applied to measured SAR values. At frequencies above 3 GHz, the validity of tissue parameters (ε and σ) is restricted to ± 5%. The uncertainty is the RSS of the ConvF uncertainty for indicated target tissue parameters.

[G] Alpha/Depth are determined during calibration. SPEAG warrants that the remaining deviation due to the boundary effect after compensation is always less than ± 1% for frequencies below 3 GHz and below ± 2% for frequencies between 3-6 GHz at any distance larger than half the probe tip diameter from the boundary.

Frequency Response of E-Field

(TEM-Cell:ifi110 EXX, Waveguide: R22)

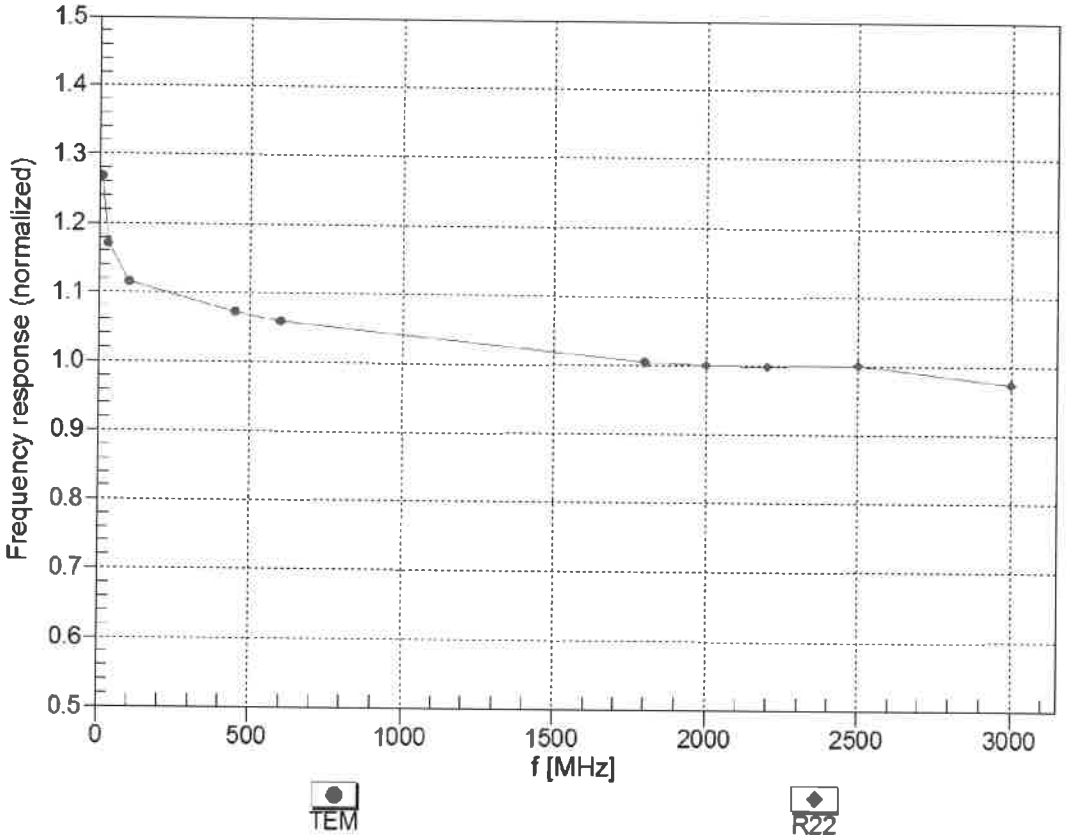

Uncertainty of Frequency Response of E-field: ± 6.3% (k=2)

Receiving Pattern (ϕ), ϑ = 0°

f=600 MHz,TEM

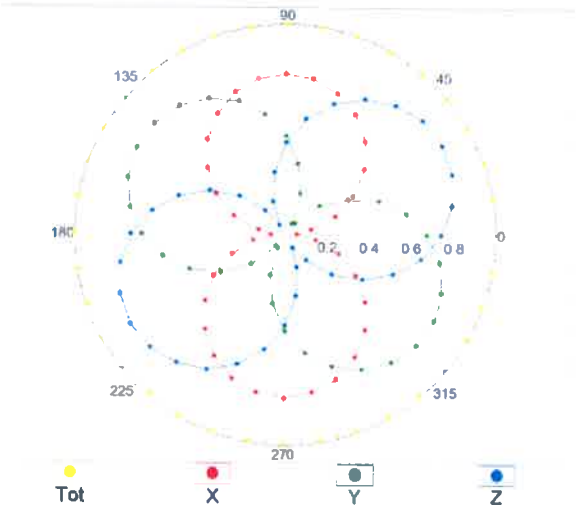

f=1800 MHz,R22

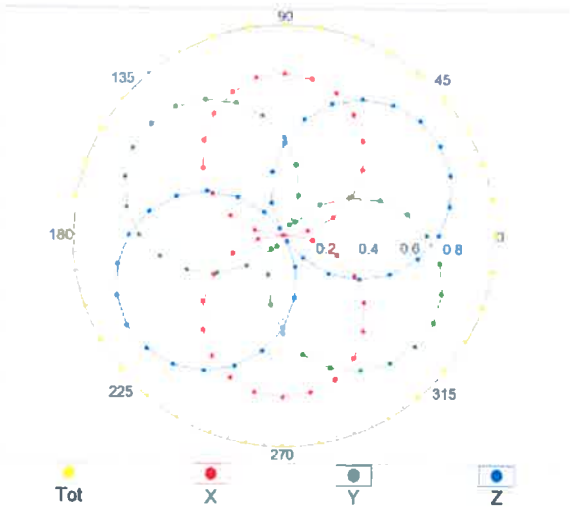

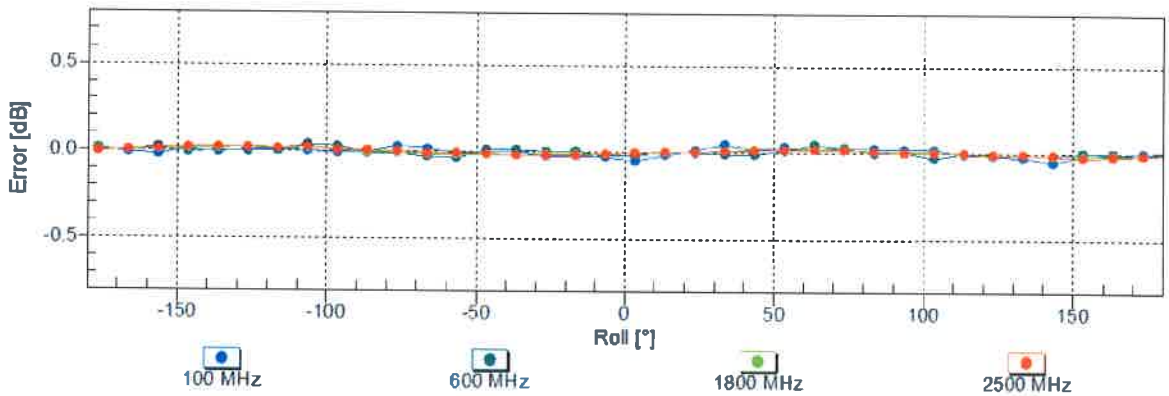

Uncertainty of Axial Isotropy Assessment: ± 0.5% (k=2)

Dynamic Range f(SAR_{head})

(TEM cell , f_{eval}= 1900 MHz)

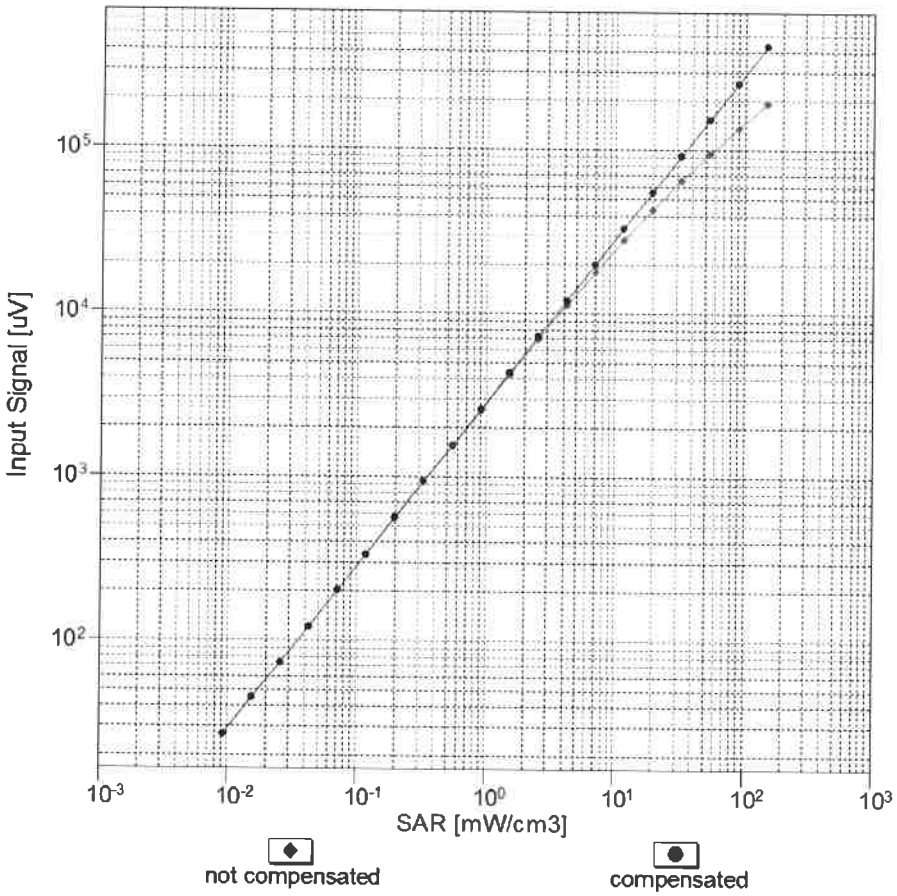

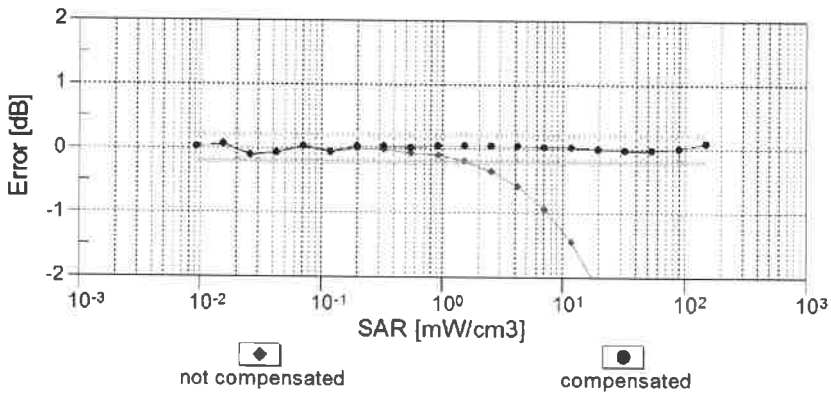

Uncertainty of Linearity Assessment: ± 0.6% (k=2)

Conversion Factor Assessment

f = 835 MHz,WGLS R9 (H_convF)

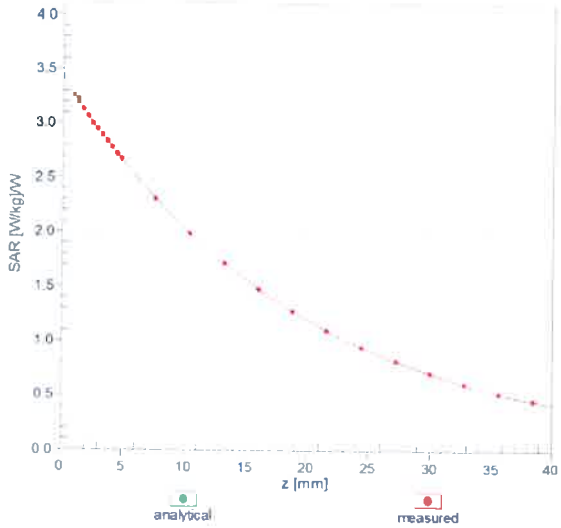

f = 1900 MHz,WGLS R22 (H_convF)

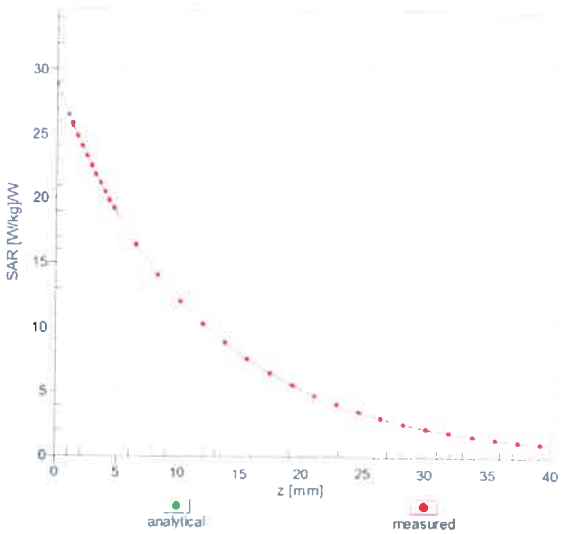

Deviation from Isotropy in Liquid

Error (ϕ, ϑ), f = 900 MHz

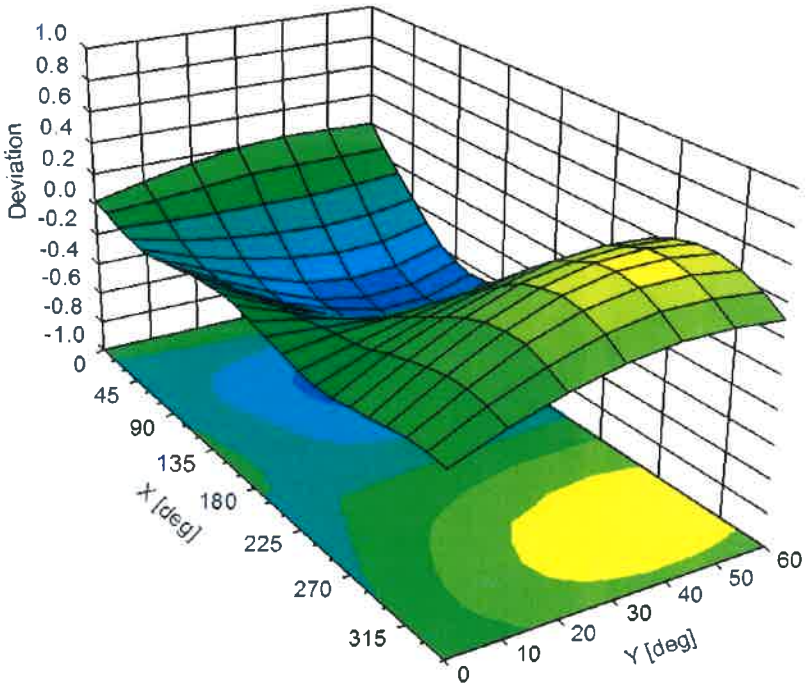

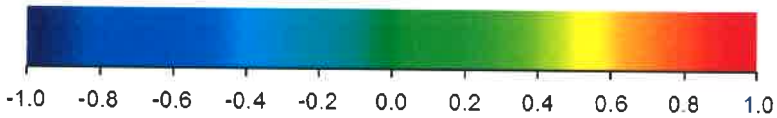

Uncertainty of Spherical Isotropy Assessment: ± 2.6% (k=2)

DASY/EASY - Parameters of Probe: EX3DV4 - SN:3971

Other Probe Parameters

Sensor Arrangement	Triangular
Connector Angle (°)	73.4
Mechanical Surface Detection Mode	enabled
Optical Surface Detection Mode	disabled
Probe Overall Length	337 mm
Probe Body Diameter	10 mm
Tip Length	9 mm
Tip Diameter	2.5 mm
Probe Tip to Sensor X Calibration Point	1 mm
Probe Tip to Sensor Y Calibration Point	1 mm
Probe Tip to Sensor Z Calibration Point	1 mm
Recommended Measurement Distance from Surface	1.4 mm