S.A.E AFIKIM
COMPUTERIZED DAIRY MANAGEMENT SYSTEMS

IDeal™

Afi Identification System

Product number 4022900H/L

Installation Manual

Kibbutz Afikim, 15148, ISRAEL
+972-4-675-4811
+972-4-675-1862
market@afimilk.co.il
http WWW.afimilk.co.il

September 14, 2003 this manual, P/N 9040380

Certificate of Approval

This is to certify that the Quality Management System of

S.A.E. - COMPUTERIZE DAIRY SYSTEMS.

has been audited by SII and found to comply with the Quality Management Standard: SI ISO 9002

The Certificate is granted in accordance with SII's Rules for the Certification of Quality Systems (SII procedure-002) which requires the continuous maintenance of the Quality System to the above Standard, as testified by the periodic audits conducted by SII.

scope: *MANUFACTURE OF COMPUTERIZED DAIRY SYSTEMS FOR: DAIRY MANAGEMENT, INDIVIDUAL FEEDING, HEAT DETECTION, HEALTH MONITORING, WEIGHING AND AUTOMATIC IDENTIFICATION.*

Accredited By RvC

EQNet

Date of initial approval:	07 . 06 . 93
Date of issue:	01 . 01 . 96
Date of expiration:	31 . 12 . 96

No: 8910

ELIAHU HADAR
Director General

Approvals and Declarations

European Standards:

CE COMPLIANCE

IDeal System 4022900H/L

The above product passed tests which comply to the following European Community standards:

* Radio, SRD:

EN-300 330-2 V1.1.1,
ERC/REC 70-03E:05/03 Annex 9

* Electromagnetic Compatibility:

- EMC for radio: EN 301 489-3V 1.31 (SRD).
- Industrial immunity: EN 61000-6-2:01

* Product Safety:

EN 60950:00

Compliance with these standards is on condition that the system is installed in accordance with the formations in which the product passed the standards tests, and the declarations given to the authorities. Any changes or combination made in the system, other than those defined, will not be approved by the standards and will be referred to accordingly.

Warning	This product was tested at a transmission level of 30 VDC. Do not adjust the Tx Voltage higher than this level.

In order to qualify the standard EN 60950:00, the transformer (230VAC/24VAC) should be VDE standard or equivalent to the local standard in EEC.

For any further information contact an S.A.E. representative.

WARNINGS

USE OF THE *IDeal* SYSTEM SHOULD BE UNDER THESE CONDITIONS:

1. OPERATING THE SYSTEM WILL COMPLY WITH THE DECLARATION OF CONFORMITY, THE T.C.F. AND THE TEST REPORTS IN THESE DOCUMENTS.

2. The 230/24 VAC 50Hz (OR 120/24 VAC 60 Hz) SUPPLY TRANSFORMER FOR IDeal SYSTEM MUST COMPLY WITH EITHER VDE & CE (89/366/EC) OR UL DIRECTIVES.

USA Standards:

FCC COMPLIANCE

The responsible party for this device compliance is:

Company name: S.A.E. Afikim USA Inc.
Address: 6520 Platt Ave. #804 West Hills CA 91307-3218 USA

This device (*IDeal*, model number 4022900H/L) complies with part 15 of FCC Rules. Operation is subject to the following two conditions: (1) This device may not cause harmful interference, and (2) this device must accept any interference received, including interference that may cause undesired operation.

This device passed tests which comply to the following FCC standards:

* Radio, SRD: 47CFR P15 Sub C, § 15.209
* Electromagnetic Compatibility: Emissions – 47CFR, P15 Sub B:01

Note: This equipment has been tested and found to comply with limits for Class B digital device, pursuant to part 15 of the FCC Rules.

These limits are designed to provide reasonable protection against harmful interference in a residential installation. This equipment generates, uses and can radiate radio frequency energy and, if not installed and used in accordance with the instructions, may cause harmful interference to radio communications. However, there is no guarantee that interference will not occur in a particular installation.

If this equipment does cause harmful interference to radio or television reception, which can be determined by turning the equipment off and on, the user is encouraged to try to correct the interference by one or more of the following measures:

- Reorient or relocate the receiving antenna.
- Increase the separation between the equipment and receiver.
- Connect the equipment into an outlet on a circuit different from that to which the receiver is connected.
- Consult the dealer or an experience radio/TV technician for help.

Warning:

Changes or modification to this unit not expressly approved by the party responsible for compliance could void the user authority to operate the equipment.

WARNING	High voltage transients, surges, and other power irregularities can cause extensive damage. It is the user's responsibility to provide a power protection system. It is the user's responsibility to install, operate, and maintain the system in accordance with all applicable codes, regulations, and safety measures.

CAUTION	The device is intended for indoor installation only. A readily accessible disconnect device shall be incorporated in the building installation wiring. The device is intended for connections to indoor communication lines only, with maximum length 30 meters.

TRADEMARKS AND PATENTS	Without prior notice and without obligation, the contents of this manual may be revised to incorporate changes and improvements. Every effort has been made to ensure that the information is complete and accurate at the time of publication. Nevertheless, S.A.E. cannot be held responsible for errors or omissions. Trademarks, patents, and copyrights apply.

Specifications

Working temperature	0-40^{0}C
Power input voltage range	24 ±2.4 VAC

Table of Contents

Introduction 1
Chapter 1: *IDeal* Components 3
IDeal Controller 4
The *IDeal* PCB 6
Settings of the *IDeal* Controller 8
Connectors of the *IDeal* PCB 12
Test Points 13
The *IDeal* Display Panel 14
The *IDeal* Box 15
The Antenna Switching Box 16
The Switching Box PCB 16
Connectors of the Switching Board 17
Chapter 2: System Configurations 19
Chapter 3: Mounting the *IDeal* Box 23
Location of the *IDeal* Box 23
Mounting the *IDeal* box 24
Chapter 4: Laying Cables 25
Chapter 5: Wiring 29
Inserting Cables into the *IDeal* Box 29
Wiring Cables to Connectors 31
Communication Cable 31
Antenna Cables 32
Tx and Rx Cables (only in systems with switching boxes) 33
Antenna Select Cables (only in systems with switching boxes) 33
Gate Switches 33
Power Supply 34
Chapter 6: Testing 35
The *IDeal* Self-test Mode 35
Testing and Adjusting Effective Antenna Ranges 36
Adding a Resistor to Reduce Antenna Range 38
Locating a Faulty Antenna 38

Introduction

The "*IDeal*" controller is the unit responsible for active identification sequence in *Afi* systems such as "*AfiAct*", "*AfiMilk*", "*AfiSort*", and other dairy systems from S.A.E. Afikim.

The "*IDeal*" interfaces between the AFI system in which it is installed and the identification system's sensors - the antennas.

The main operations of this unit are:

- Receiving an identification request from the computer.
- Selecting the appropriate antenna to activate.
- Sending power and frequency signals to activate the antenna.
- Receiving the identification response from the cow tag.
- Translating the analog data to a digital sequence.
- Sending the identification data to the computer.

In some configurations (such as in the "AFIMILK" system for Herringbone parlors) the *IDeal* unit sends gate status to the computer.

Chapter 1: *IDeal* Components

The "*IDeal*" identification system consists of an *IDeal* box (the controller box) and antenna input to the box. The system is connected to a computer, through an *AfiCom1* or *AfiCom* communication card, to *AfiFarm* herd management software. Antenna input may consist of:

- One or two antennas connected directly to the *IDeal* box (a "2 Antenna" system).

- If three or more antennas are used in the system, antennas are connected to the *IDeal* box by way of one or more antenna switching boxes (a "Switching box" system). Each antenna switching box may be connected to up to 16 antennas. Up to 3 switching boxes may be connected to each *IDeal* box.

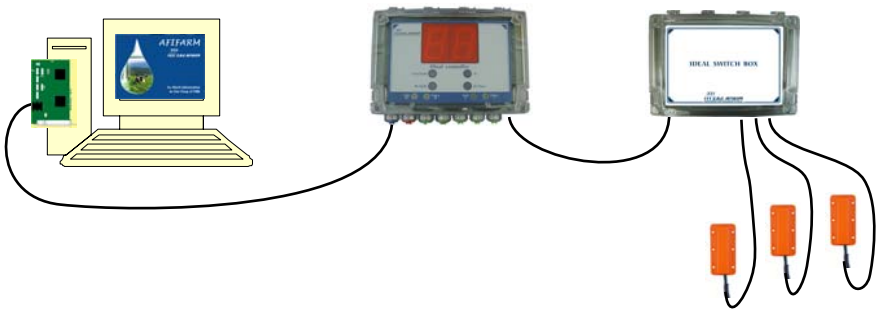

IDeal Controller

The *IDeal* controller unit is a plastic box containing a printed circuit board (PCB). A display panel is on the front cover of the box, as pictured. Box dimensions are:

- Width: 28 cm (11”) long.
- Height: 19 cm (7½”).
  Including hinges and grommets height is 22 cm (8¾”),
- Depth: 8.5 cm (3½”) thick.
- Net weight: 1.7 Kg. (3 lb. 12 oz.)
  Shipping weight: 2.7 Kg. (5 lb. 15 oz.)

The *IDeal* controller (P/N 4022900H/L)* consists of:

- A plastic enclosure (P/N 7000070).
  - Top (P/N 7000011).
  - Back (P/N 7000012).
  - 7 grommets. Each grommet has 3 inlets.
    21 cable inlets are in grommets as follows:
    - 5 grommets for 6.5 mm (¼”) cables (P/N5001764).
    - 1 grommet for 7.0 mm (¼”) cables (P/N5001763).
    - 1 grommet for 5.0 mm ($^3/_{16}$”) cables (P/N5001762).
  - 7 Grommet nuts (P/N 9020726).

- A PCB (P/N 4022800H/L).
  The seven-segment display is on the back side of the PCB.

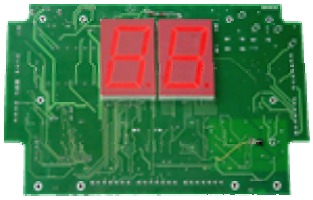

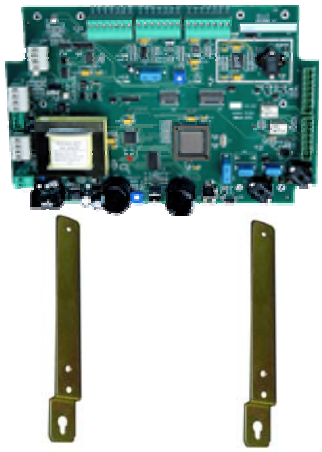

- 2 mounting plates (P/N 4088016), 4 Allen bolts (M6) and 8 nuts.

- A “P3” communication cable (P/N 4088435), for connecting the *IDeal* box to the computer.

An open *IDeal* box, with mounting plates attached.

*	*IDeal* systems operate on one of two frequencies throughout the world: HI or LOW. The part number reflects the frequency setting of the *IDeal* when shipped. 4022900H designates an *IDeal* shipped at a high frequency. 4022900L designates an *IDeal* shipped at a low frequency. (Low frequency systems [blue antennas and tags] are used in Western Europe. High frequency systems [orange antennas and tags] are used in the U.S.A. and other countries.)

Cable Requirements

This section describes the cables that are needed for the installation of the *IDeal* system.

Communication Cable

A 4-wire shielded cable 22 AWG (0.3 mm²) carries the communication signal between the *IDeal* box and the computer.

Note:	The device is intended for connection to indoor communication lines only, with maximum length 30 meters.

Power Cable

A 3-wire, 18 AWG (0.75 mm²) cable is required to supply power to the *IDeal* box.

Antenna *Select* Cables (only in systems with switching boxes)

A 7-wire, 22 AWG (0.3 mm²) cable carries antenna select signals between the *IDeal* main board and antenna switching boxes. This cable also carries a 5 V DC power supply to the antenna. Wire colors of this cable are red, white, black, brown, green, orange, and yellow. Maximum length of this cable is 15 meters.

Tx and Rx Antenna Signal Cables (only in systems with switching boxes)

A 6-wire shielded cable 22 AWG (0.3 mm²) carries Tx and Rx antenna signals between the *IDeal* box and switching boxes. This cable extends from the *IDeal*, cascading to the switching units (connecting one switching unit to the next).

The drawing on page 3 depicts connections between the *IDeal* box and switching boxes.

Antenna Cables

Antennas are provided with cables attached. The Tx and Rx antenna signal cable, described above, can be used to extend antenna cables.

The *IDeal* PCB

This section describes the printed circuit board (PCB) of the *IDeal* controller, and

The printed circuit board consists of three electrical circuits - a power supply circuit, a micro-controller circuit and an RF transmission/reception unit.

The power supply circuit is fed by 24 ±2.4 VAC, supplying 5 and 12 volts for the micro-controller circuit, as well as by Tx (Transmission) power and frequency. The Tx power level determines the effective identification range of the system. Tx power can be adjusted by a potentiometer on the PCB (P2). Voltages can be measured at test points on the PCB.

The micro-controller circuit directs the digital data flowing between the antenna and the computer. It is connected to the controller by a four-wire communication cable, and sends data in response to the controller's request. The micro-controller activates the antenna that needs to transmit an identification request. It also temporarily stores some digital data (the identification and step counter of the I.D. tag), until communication is initiated by the computer.

The RF transmission/reception circuit is the direct connection between the micro-controller and the antenna. It converts digital data into an analog signal sent to the antenna and vice versa.

A few means of adjustments (DIP switches, jumpers and potentiometers), as well as some connectors (to which cables are connected), are on the board. The drawing below displays the PCB's main components, connectors and means of adjustments. Verify that settings meet requirements of the system you are installing.

The following variables must be defined in each *IDeal* controller:

- Type of system:
  - "2 Antenna" (only one or two antennas are connected directly to the *IDeal*),
  - "Switch Boxes" (three or more antennas are connected indirectly, through one two or three switching boxes. Up to 16 antennas can be connected to each switching box.)

- Frequency settings – The *IDeal* box can be set to operate in a high frequency or in a low frequency. Frequency setting depends on the location of installation. (Low frequency systems [blue antennas and tags] are used in Western Europe. High frequency systems [orange antennas and tags] are used in the U.S.A. and other countries.)
- Communication *type* – The *IDeal* box supports Current Loop communication as well as RS232 communication. C.L. is the communication type used in *Afi* systems.
- Communication *protocol* – Digital communication is in one of two "languages:" the "old" communication protocol, or the "new" communication protocol (also referred to as protocol C2000). The new protocol supports tag numbers up to 65,536. (The old protocol is limited to a highest tag number of 4095.)
- Antenna transmission range – Antenna transmission is determined by adjusting a potentiometer.

These settings are explained on the following pages.

Settings of the *IDeal* Controller

The next page is an illustration of the *IDeal* PCB, displaying jumpers, the dipswitch panel and connectors. The page following the illustration is a table of adjustable components of the PCB.

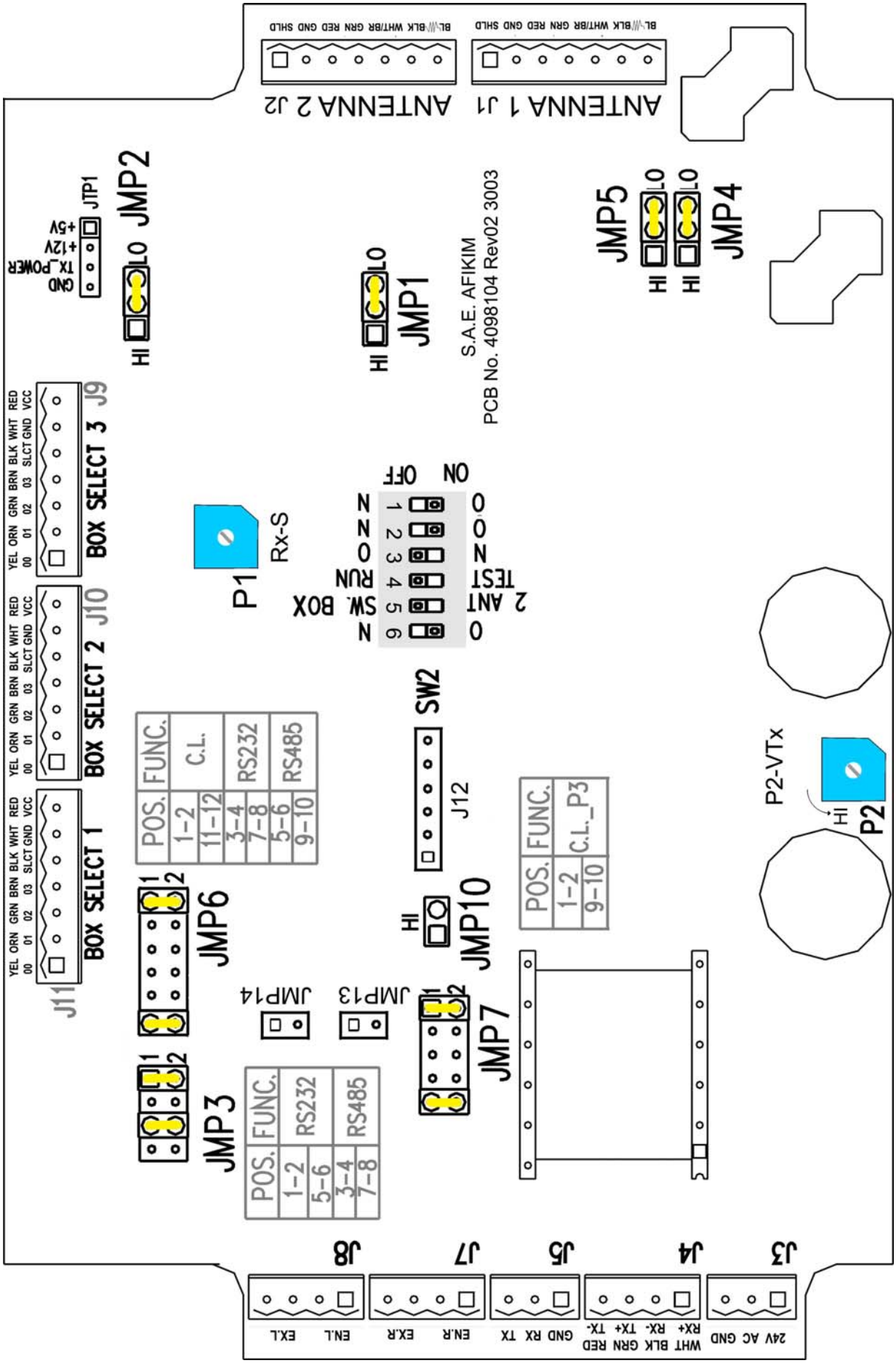

IDeal printed circuit board: layout of set up components, connectors, and test points

Adjustable Components of the *IDeal* PCB	
Jumpers and connection points	
JMP1	Hi or Low frequency
JMP2	Hi or Low frequency
JMP3	Communication type
JMP4	Hi or Low frequency
JMP5	Hi or Low frequency
JMP6	Communication type
JMP7	C.L. communication type with “P3” connector
JMP10	Hi or Low frequency
J12	Not used, must remain OPEN.
JMP13	Not used, must remain OPEN.
JMP14	Not used, must remain OPEN.
JPT1	Used for testing
Dipswitch panel SW2	
Switch #1	Old or New communication protocol
Switch #2	Old or New communication protocol
Switch #3	Old or New communication protocol
Switch #4	Test mode or Work mode
Switch #5	Type of system: 2 Antenna, or Switching Box
Switch #6	Old or New communication protocol
Potentiometers	
P1	DO NOT CHANGE. Adjusts reception sensitivity.
P2	Determines transmission voltages of *all* antennas.
Connectors	
J1	Antenna #1 in a 2 Antenna system, or to switch box #1
J2	Antenna #2 in a 2 Antenna system
J3	Power supply
J4	Communication connector for Current Loop communication type
J5	Communication connector for RS232 communication type
J7	Connector for gate switches on side A of parlor.
J8	Connector for gate switches on side B of parlor.
J9	Antenna select cable from switching box #3
J10	Antenna select cable from switching box #2
J11	Antenna select cable from switching box #1

Settings of the *IDeal* PCB	
Variable	**Setting on PCB**
Type of system	Switch number 5 on dipswitch panel SW2 (near the center of the board): (Dipswitch panel SW2 is located near the center of the PCB.) • "2 Antenna" system; if one or two antennas are connected *directly* to the *IDeal*, set switch 5 of SW2 to **2 ANT**. (Default setting) • "Switching Box" system; if antennas are connected to the *IDeal* indirectly, by way of switching box(es), set switch 5 of SW2 to **SW. BOX**. 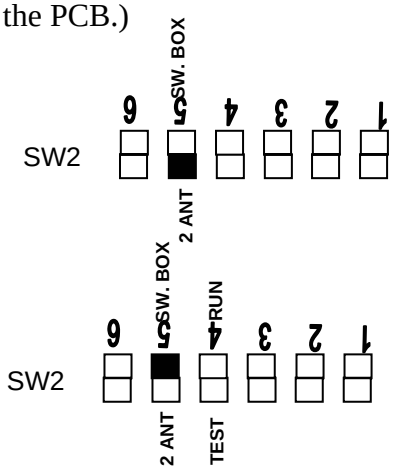
Test/Run mode	Switch number 4 on dipswitch panel SW2 (illustrated above): During normal operation, switch 4 is set at RUN. During tests, switch four is at TEST.
Communication *protocol*	Dipswitch panel SW2 is also used to determine the communication protocol. Four switches, labeled O and N, on their sides, determine the communication protocol: • When these switches are set to **O**, then the IDeal is set to operate in the "Old" communication protocol, as illustrated. • When these switches are set to **N**, then the *IDeal* is set to operate in the "New" communication protocol (also referred to as protocol C2000), as illustrated. 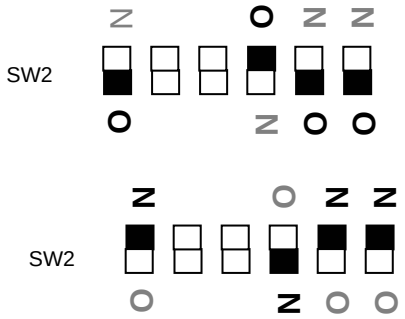
Communication *type*	Jumper JMP6 determines communication type. (Jumper JMP6 is in the upper left corner of the board.) • C.L. communication type: When pins 1-2 and 11-12 of Jumper JMP6 are plugged, the *IDeal* is set 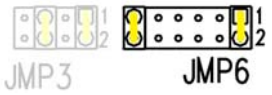

	to operate in the Current Loop communication type. (JMP3 is not utilized.) • RS232 communication type (optional comm. type): To set the *IDeal* to operate on RS232 communication, set jumpers as illustrated: * On Jumper JMP6, plug pins 3-4 and 7-8. * Ensure that on Jumper JMP3, pins 1-2 and 5-6 are plugged. (Jumper JMP3 is preset to this position.) • RS485 will be available in the future. 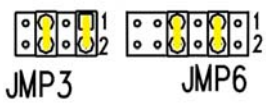
Jumper JMP7	Ensure that pins 1-2 and 9-10 of jumper JMP7 are plugged.
Variable	**Setting on PCB**
Frequency	5 jumpers on the PCB are used to determine *IDeal* frequency: (Jumpers **JMP1**, **JMP2**, **JMP4**, **JMP5,** and **JMP10**) • To set the *IDeal* to operate in a high frequency, jumper the *left* two pins of jumpers JMP1, JMP2, JMP4, and JMP5**,** and plug jumper JMP10, as illustrated. 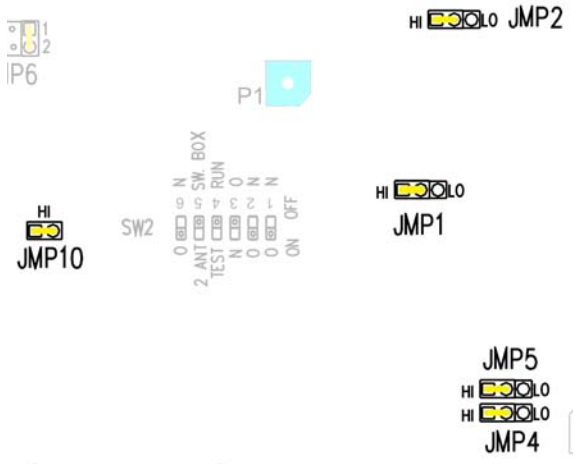

	• To set the *IDeal* to operate in a low frequency, jumper the *right* two pins of jumpers JMP1, JMP2, JMP4, and JMP5**,** and *un*plug jumper JMP10, as illustrated. 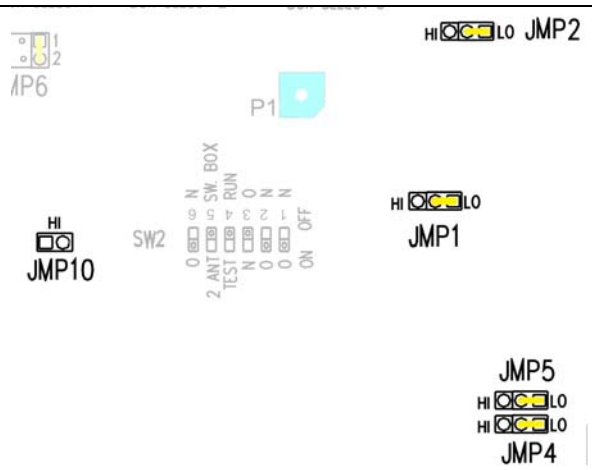
Antenna reception **Warning!** Potentiometers must be adjusted gently. Using too much force with the adjusting screw may break the device.	Two regulation potentiometers influence working ranges of antennas: • P1, located near the center of the board, is used to adjust reception *sensitivity*. The *IDeal*'s reception circuit is calibrated before leaving the factory, so P1 should not be touched. In any case, it is not recommended to change P1 calibration without the company's guidance. • P2, located on the bottom edge of the board, determines the antennas' *transmission voltages*. The transmission voltage determines the antenna's effective working range, and should be adjusted according to the installation requirements. Turning P2 counter clock-wise raises transmission power and enhances reception. 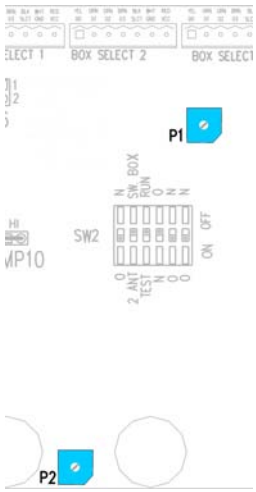
	Note: Common Market standards allow maximum Voltage of 30 VDC

Connectors

Connectors are the interface between the *IDeal* controller and peripheral devices connected to it. Below is a list of the connectors and their functions.

J1, J2 Antenna connectors: These 7-pin connectors are located along the right edge of the PCB. These connectors are used for direct connection of antennas to the board, in systems where only one or two antennas are required.

Connector J1 supports antenna number 1 and J2 supports antenna number 2. When the system is set to operate in a "Switching Box" configuration (antennas are connected by way of switching boxes) by means of Dip switch setting, the antenna signal to the switch boxes should be connected to the J1 connector.

J3, Power input: The *IDeal* system is powered by a 24 VAC from an external source (Do **NOT** use the same power supply used for the milkmeters). J3 is, located at the lower left corner of the board.

Warning !	When inserting the terminal block into connector J3, ensure that the ground wire connects to pin **GND**. Incorrect wiring may damage the PCB. 24V AC GND ■ ○ ○ J3

J4, Communication: Current loop communication connector. Junction J4 is the CL connector to the AFI system's main controller (*AfiCom1* or *AfiCom* communication board, in the computer). J4 is located along the left edge of the PCB.

J5, Communication: RS232 communication connector. This is an optional communication type used only in specific situations. This connector is located along the left edge of the PCB.

J7, J8, Gate inputs: In some configurations, the *IDeal* controller supports gate switch inputs. (When a gate is closed, its respective LED glows.) These gate inputs are connected to J7 - J8. Connectors J7 - J8 are located along the left edge of the P.C.B. Wiring of these connectors is explained in the following chapter. Connectors J7-J8 are *dry* contacts (no power is supplied through these connectors).

J9, J10, J11, Antenna select: When the system is configured for a "Switching box" system (using switching boxes), the *IDeal* sends an antenna *select* signal to the switching boxes. The antenna select signal dictates which antenna to activate.

- Connector J11 (Box select 1) is connected to the first switching box (supporting antennas 1 - 16).
- Connector J10 (Box select 2) is connected to the second switching box (supporting antennas 17 - 32).
- Connector J9 (Box select 3) is connected to the third switching box (supporting antennas 33 – 48).

These three connectors are located along the top edge of the PCB.
These connectors are active only when dipswitch SW2 is set to SW. BOX, as described in the previous section.

Test Points

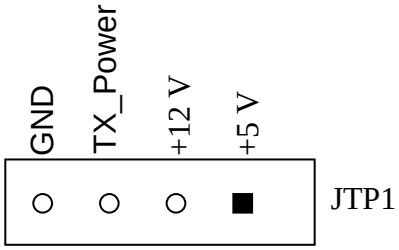

Four test points are located at the upper right corner of the PCB, at JPT1. These test points are used for testing the power supply circuit in cases of malfunction and/or for adjustment purposes.

- GND - Ground signal for all other test points.
- TX_Power This is the transmission power supply level for the antennas. The level of this power determines the identification range. Therefore this voltage level is checked whenever an adjustment is required. (The power supply VTx can be adjusted by potentiometer P2). The allowed voltage range is 8VDC to 30VDC.
- +12 VDC. Allowed voltage range is 11.8 VDC - 12.2 VDC.
- +5 VDC supply for the micro-controller's circuit. The allowed voltage range is 4.9 VDC - 5.1VDC.

The *IDeal* Display Panel

A display panel is on the back side of the *IDeal* PCB.

A 7 segment display, and eight LED indicators are visible through the clear front cover of the *IDeal* box.

IDeal Box case

The main display indicates the antenna number currently activated (transmitting a signal).

Two pairs of gate indicators (Left entry and exit gates; right entry and exit gates) glow whenever the corresponding gate is closed. Entry and exit #1 should correspond to the gates on the left side of the parlor. The left side of the parlor should be the lower number milk meters, as illustrated.

The Com fault indicator is above the Side II gate indicators. The Com fault LED indicates a faulty communication with the computer, and it must be off when a milking session is in process.

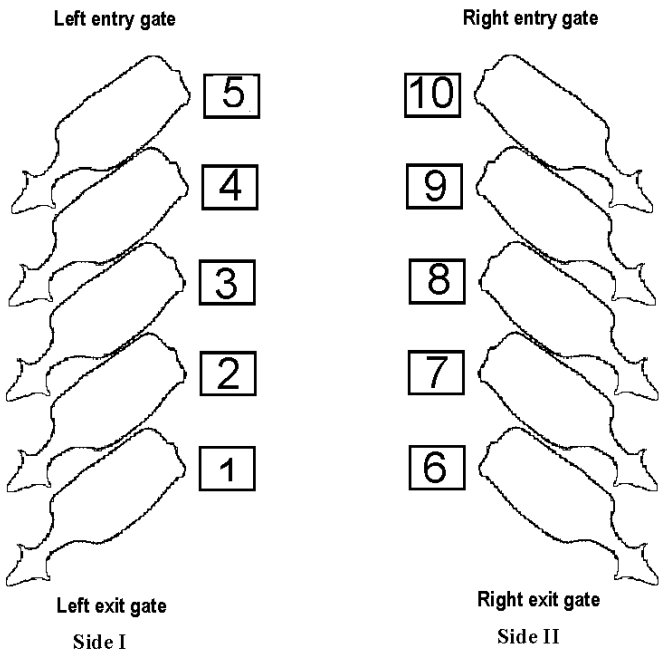

The Tx indicator (above the Rx Data gates indicators) reflects the *IDeal's* transmission sequence. The Tx indicator blinks when identification request is sent. This indicator is a red LED.

The Rx Data indicator reflects the *IDeal*'s reception status. When there is a positive reception of an identification signal, this indicator blinks brightly. A weak flicker indicates interference from an external source. As well, flickering or glowing of this LED when there is no identification activity in the parlor indicates external interference. This indicator is a green LED.

The *IDeal* Box

When power supply is on, the main display appears as .-An internal fuse is on the *IDeal* PCB. If the circuit is overloaded, the fuse temporarily opens the power circuit to block power supply to the board. After the short circuit has been repaired, the circuit is closed and the power supply reconnected.

Cable inlets (grommets) are on the lower side of the *IDeal* box. Different size cables are inserted through grommets of appropriate sizes. Each color grommet represents a cable size. This is detailed in the following chapter.

Snap lock

Snap lock

Open the box by pressing two snap locks on the front corners.
When closing the box:

- Ensure that the cover is to the left edge of the hinges.

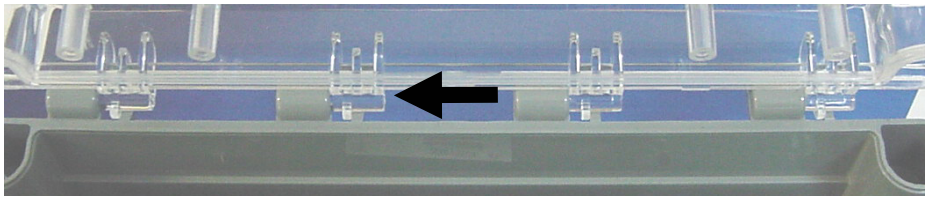

- Verify that the locks on the corners snap shut, to ensure a tight seal.
- Screws are provided in the cover, near the snap locks, to seal the box. When finished wiring the *IDeal*, tighten these screws to seal the box.

The Antenna Switching Box

Each *IDeal* box can support as many as 48 antennas. In systems using more than two antennas, antenna switching boxes are required.

An antenna switching box is a connection board, with a switching relay for each antenna. One box can support up to 16 antennas, and up to three boxes may be cascaded into the *IDeal* controller.

Switching Box Board

The switching box board, contains antenna connectors and serves as a buffered interface between the *IDeal* and antennas.

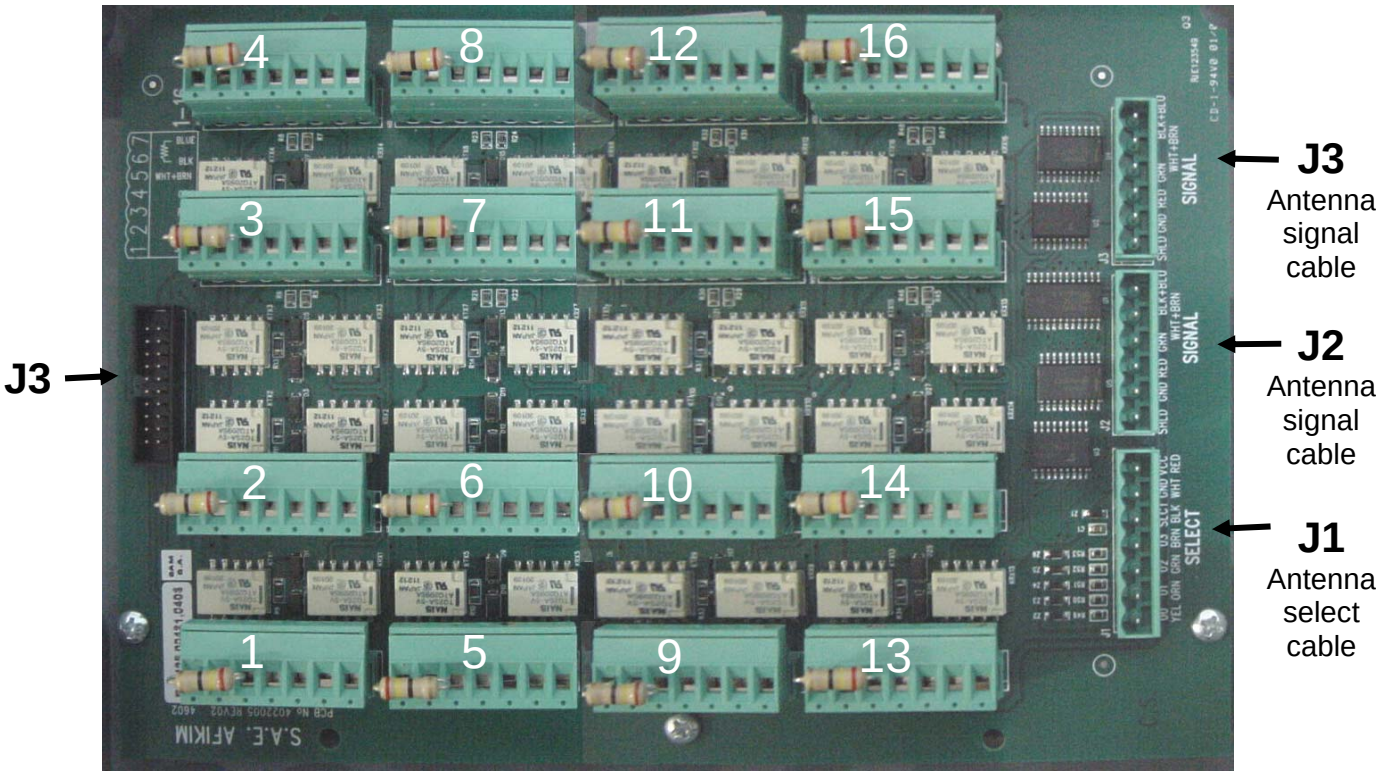

Switching Board Connectors

The switching board contains four types of interface connectors:

- Connector J1 receives the antenna select signal from the *IDeal* card.
- Connectors J2 and J3 carry the antenna transmission and reception signals from/to the *IDeal* main board. Switching units are connected in parallel. The cable entering J2 may exit via J3, carrying signals to the next switching box.
- Connectors 1 to 16 are the antenna connectors. Antennas must be connected to these connectors in the proper order:
- In switching box #1, antenna #1 is wired to connector #1, antenna #2 is wired to connector #2, and so forth.
- In switching box #2, antenna #17 is wired to connector #1, antenna #18 is wired to connector #2, and so forth.
- In switching box #3, antenna #33 is wired to connector #1, antenna #34 is wired to connector #2, and so forth.
- If more than one *IDeal* box is in the system, continue antenna connections in the same manner. (Antenna #49 is wired to connector #1 of switching box #1, of the second *IDeal* box.)

Chapter 2: System Configurations

This chapter illustrates, in more detail, configurations of the *IDeal* identification system. Two configurations are illustrated on the following pages.

Configuration

The *IDeal* controller supports two working modes:

- A "2 Antenna" mode uses only one or two antennas. Switching boxes are not required for this mode. This mode is used in systems such as *"AFIACT," "AFISORT"* and *"Entrance Identification"* systems.
- A "Switching Box" mode; where three or more antennas are connected to one or more switching boxes.

The drawing below depicts a "2 Antenna" *IDeal* system in a milking parlor. This drawing depicts a basic configuration of *AFIACT* with walkover antennas, installed at the parlor's entry door.

In the drawing below, two antennas are connected directly to the *IDeal*.

In this situation, the *IDeal* is set to work in a *2 Antenna* mode. (Switch No. 5 of dip switch array SW2 is set to **2 ANT**). The two antennas are connected to J1 and J2 connectors on the *IDeal* board.

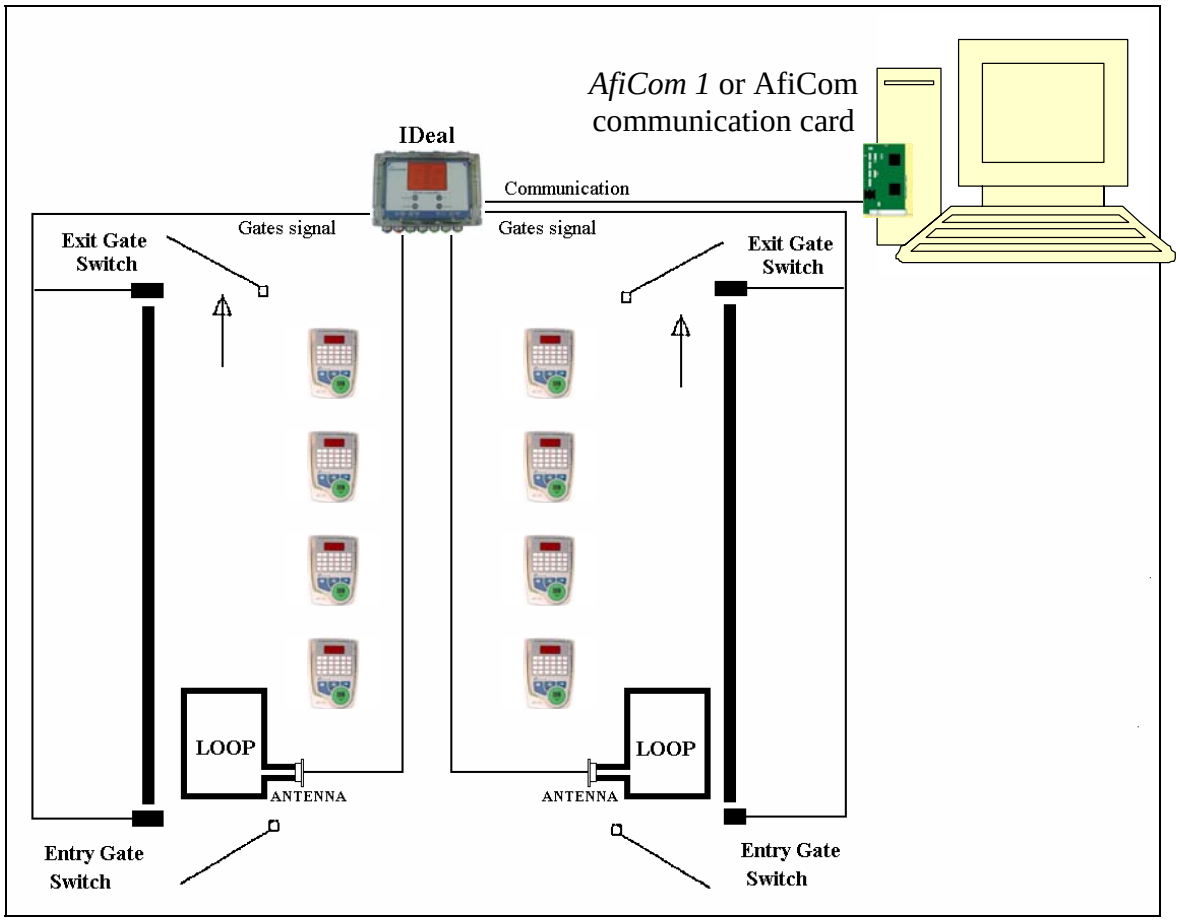

"2 Antenna" system in a milking parlor

The drawing below shows a “Switching Box” *IDeal* system in a herringbone parlor. In this configuration the antennas are connected to a switching box. (Switch No. 5 of dip switch array SW2 is set to **SW. BOX**).

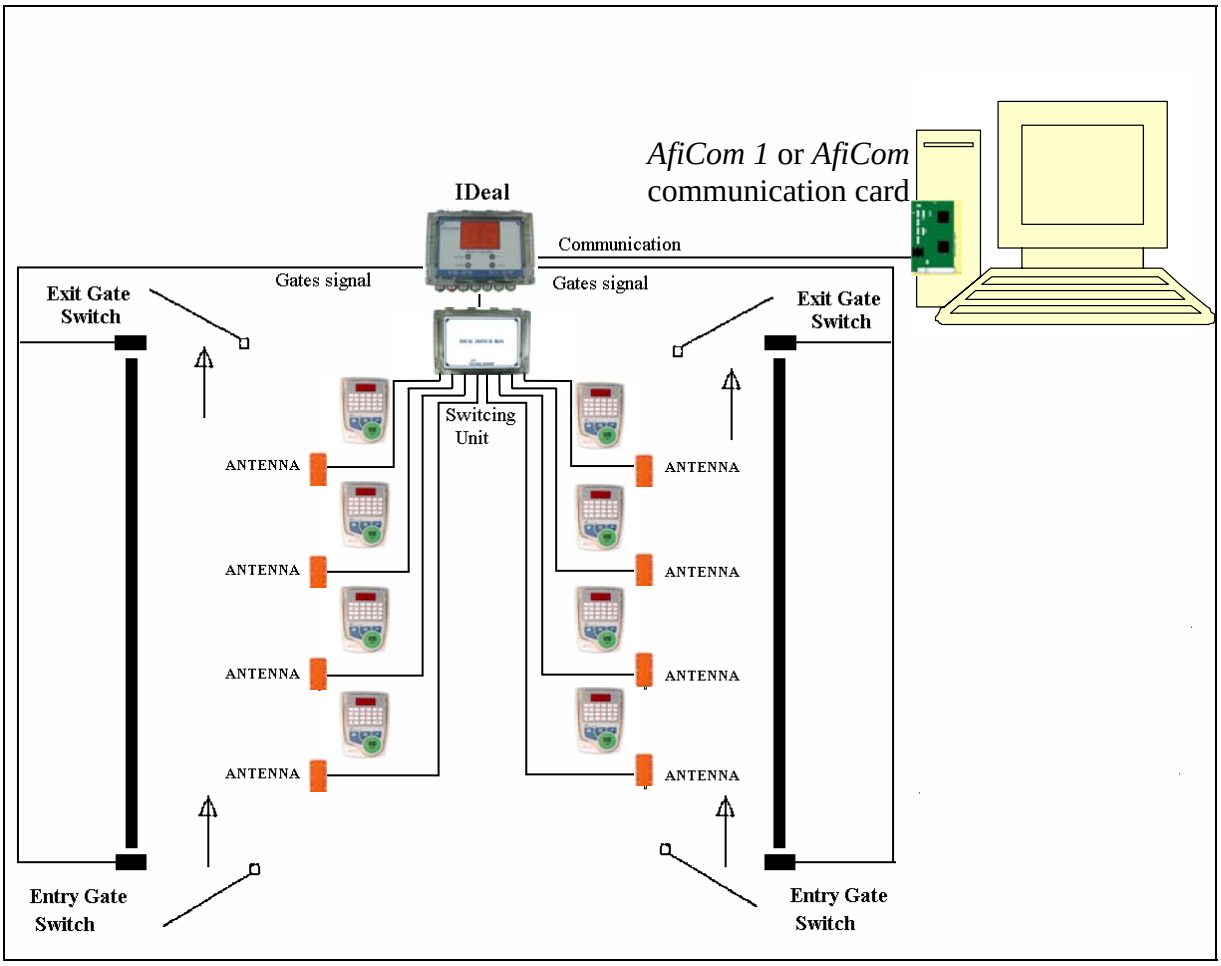

“Switching Box” system in a parlor

Chapter 3: Mounting the *IDeal* Box and Switching Boxes

This chapter explains the mounting of the *IDeal* box.

Location of the *IDeal* Box

Mount the *IDeal* box in a location that meets the following criterion:

- Mount the *IDeal* box on a wall or at any location from which it can be seen from everywhere in the parlor, (or other facility where it is used, such as a sort weigh system).
- Maximum length of the cable running between the switching units and the *IDeal* is 15 meters. This means that, in some cases, the switching units will be installed halfway through the milking parlor, above the middle milking stall.

Note:	The device is intended for connection to indoor communication lines only, with maximum length 30 meters.

- We highly recommend installation of the *IDeal* close to antennas, so that the cable between antennas and the *IDeal* is as short as possible.

Warning	Ensure that there is a very limited amount of electrical interference in the environment, especially from AC controllers (variators) and AC motors.

Mounting the *IDeal* box

Each *Ideal* box is provided with two support plates on its back, as illustrated. The box can hang from the support plates. Or, the support plates can be attached to the box "upside-down", and the plates can support the box above the point of attachment to the wall or beam. The latter method is advantageous in mounting the box on a beam with little overhead clearance. The support plates protrude 6.5 cm ($2^5/_8$") from the edge of the box. A M6 bolt is used to secure the support plates to the wall or beam.

After the proper location is determined, install the *IDeal* box.

1. Attach the support plates to the box, in the desired position, as illustrated below:

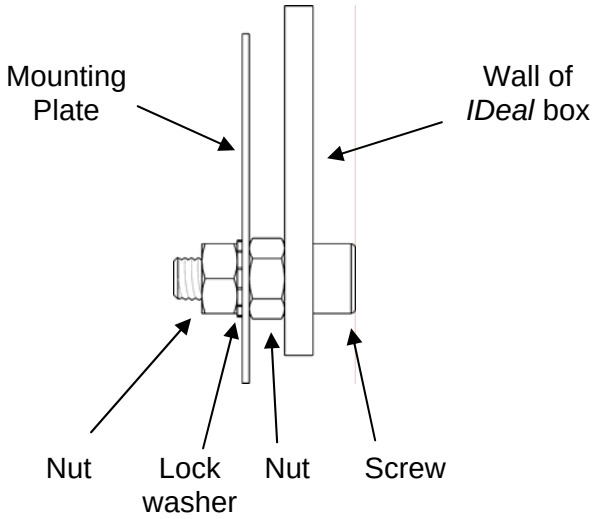

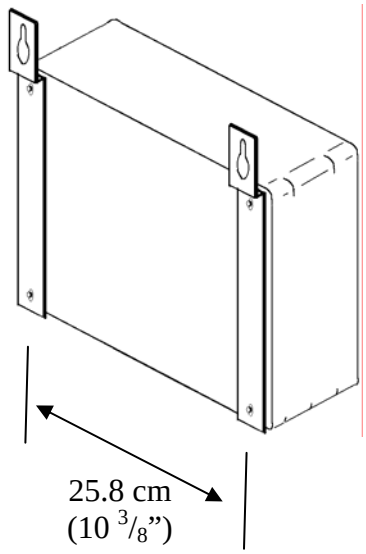

2. Bolt the *IDeal* box firmly to the wall or beam.

Chapter 4: Laying Cables

This chapter describes the cable layout and wire connections of the *IDeal* identification system.

Lay cables as illustrated and described on the following pages.

Laying Cables

Lay cables as described below, and as illustrated on the following pages.

- Communication Cable
  [4-wire, shielded, 22AWG (0.3 mm²)]
  Lay the communication cable between the *IDeal* box and the computer.

- Antenna *Select* Cables (only in systems with switching boxes)
  [7-wire, 22AWG (0.3 mm²), shielded]
  Lay antenna select cables between the *IDeal* and antenna switching boxes.

Note:	Maximum length of the Antenna *Select* cable is 15 meters.

- Tx and Rx Antenna *Signal* Cables (only in systems with switching boxes)
  [6-wire, 22 AWG (0.3 mm²), shielded]
  Lay antenna signal cables between the *IDeal* box and antenna switching boxes, as pictured on the following page.

- Antenna Cables
  [6-wire, 22 AWG (0.3 mm²), shielded]
  Antennas are provided with cables attached. The Tx and Rx antenna signal cable, described above, can be used to extend antenna cables. Lay antenna cables from antennas to the *IDeal* box, or antenna switching boxes.

Note:	Make antenna cables as short as possible.

- Power Cable
  [3-wire, 18AWG (0.75 mm²)]
  Lay a power supply cable to the *IDeal* box.

The drawing below depicts connections of a “Switching Box” *IDeal* system (supporting up to 48 antennas).

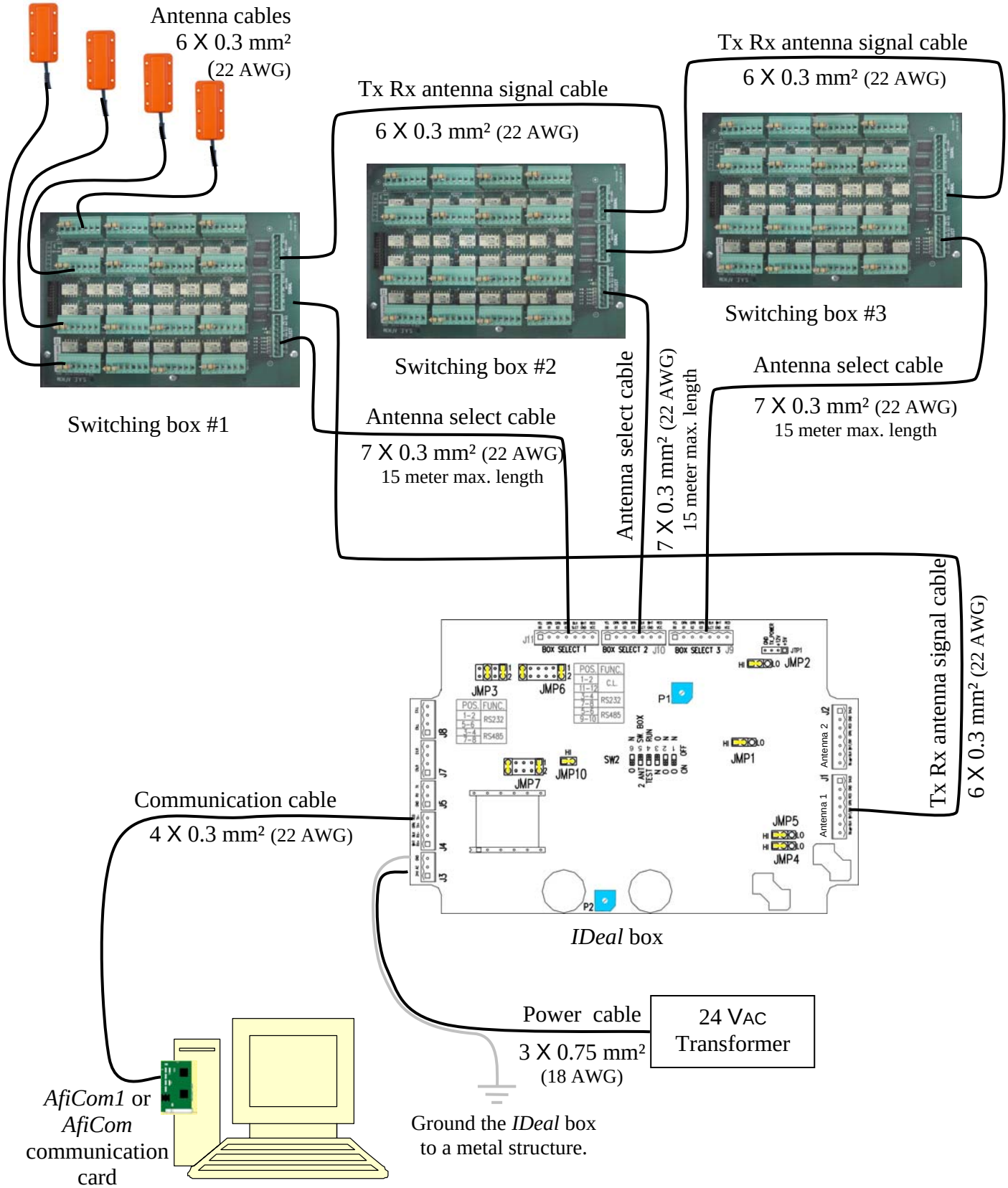

Note:	Power supply to this unit must be 24±2.4 VAC_1 75VA, from an isolating transformer.

The drawing below depicts connections of a “2 Antenna” *IDeal* system (supporting one or two antennas).

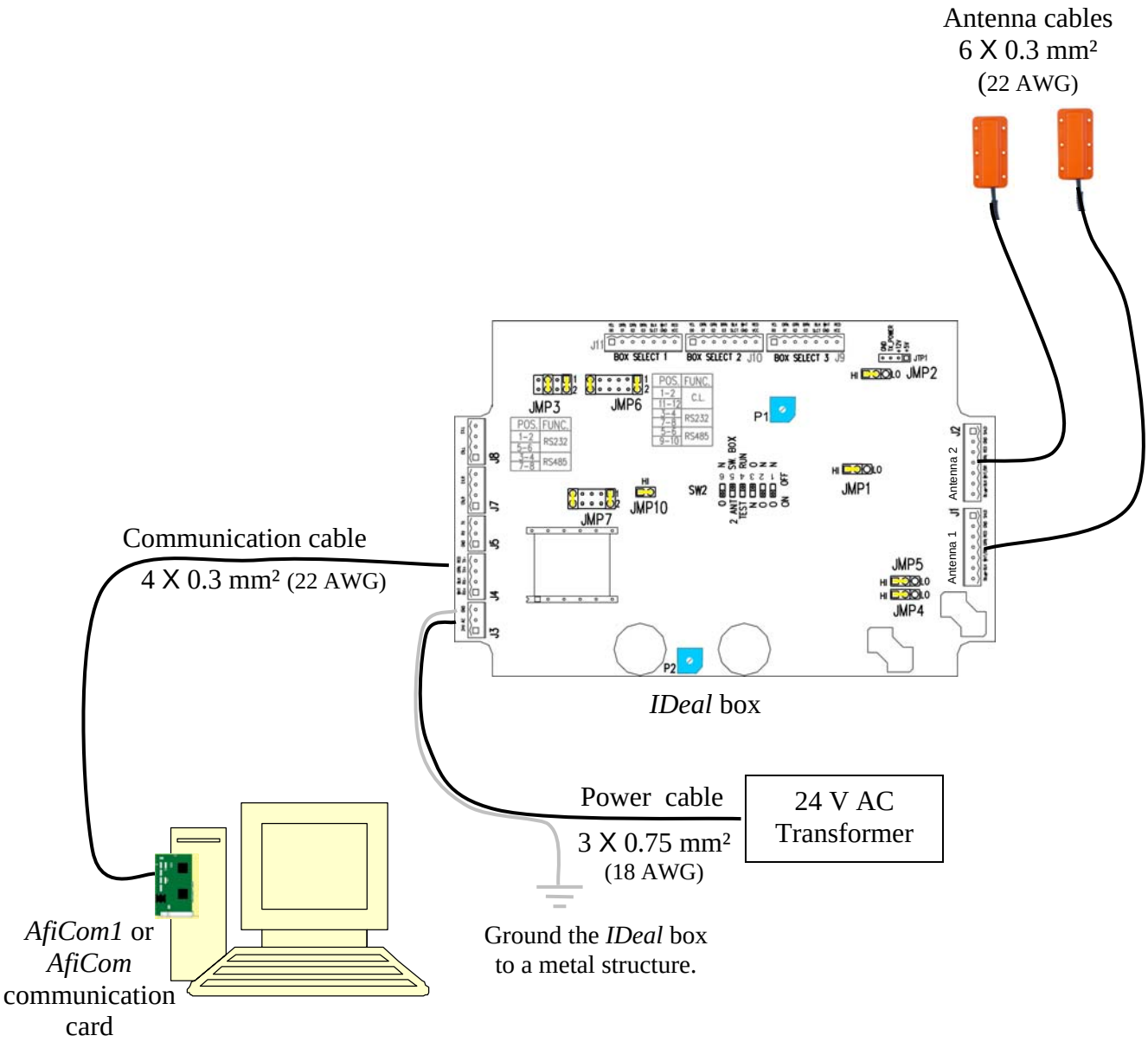

Note:	Power supply to this unit must be 24 ±2.4 V_{AC_1} 75VA, from an isolating transformer.

Chapter 5: Wiring

This chapter details wiring of the *IDeal* identification system.

Inserting Cables into the *IDeal* Box

After laying cables, insert them into the *IDeal* box. *IDeal* boxes, and antenna switching boxes, are provided with color-coded grommets. Each cable is inserted through its appropriate grommet.

Insert cables as described on the following page.

Green grommets – Antenna cables
6.5 mm (¼”) diameter (P/N 5001764)

Red Grommet – Communication cable
5.0 mm (3/16”) diameter (P/N 5001762)

Blue grommet – Power cable
7.0 mm (¼”) diameter (P/N 5001763)

Grommet nut (P/N 9020726)

Insert cables as follows:

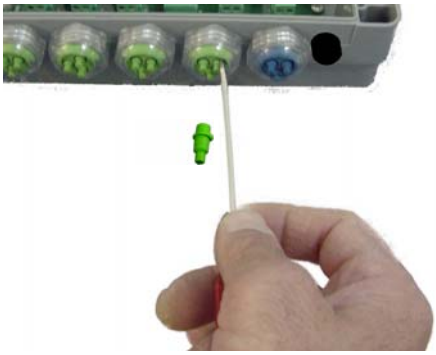

1. Using a small screwdriver, or any pointed object, puncture a hole on a side of the desired plugs. Pull loosened plugs from the grommet.

Warning	Remove plugs *only* where a cable will replace it. If grommet holes are left open, the box will not be waterproof, and components may be damaged.

2. Unscrew the nut and remove grommets.

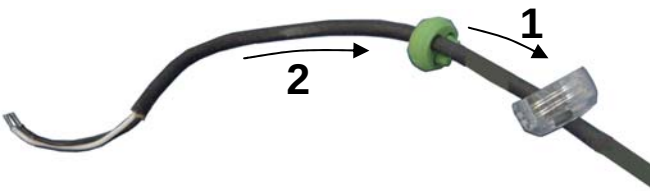

3. Insert cables through the nut, and then insert cables through grommet holes. Allow slack for wiring inside the box.

4. Insert the grommet correctly into the socket. Ensure that three small slots on the grommet are in correct position. This prevents the grommet from rotating when tightening the nut. Screw the nut one revolution on the threads, so that it is loosely held in position.

After inserting cables, connect wires to connectors, as described in the following section.

Wiring Cables to Connectors

Wire cables as described in this section.

Connecting the Communication Cable

Connect the communication cable as described below. See the *AfiCom 1* or *AfiCom* communication card installation manual for more details on connections to the *AfiCom 1* or *AfiCom* card.

In most situations, the Current Loop communication type is used. If using C.L. connect a “P3” communication cable to Connector J4, on the left edge of the *IDeal* board. Connect red, green, black and white wires to the connector as illustrated below. (Ensure that jumper pins on the *IDeal* are properly set, as described on page 11.)

AfiCom 1 Port 3, 4, 5, or 6

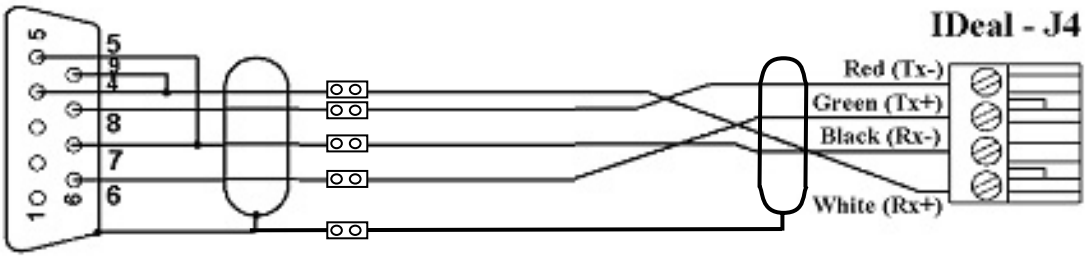

AfiCom1 Card (P3) to IDeal communication cable

Connecting Antenna Cables

Each antenna is connected individually to the *IDeal*, or to the switching box in a "Switching Box" system. In the *IDeal* box, wire colors are printed next to each connector. In switching boxes, one pattern of color connections is printed on the board. 16 antenna connectors are in each switching box. See illustrations on pages 27 and 28.

In normal operation:

- The brown and white wires are connected together, to the "Wht/Brn" pin.
- The blue and the black are connected together to the "Blk" pin.
- Connect antenna cables in this manner, to their respective connectors.

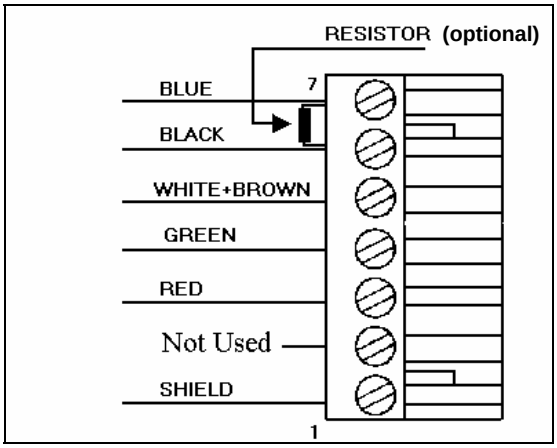

Note : The "GND" Pin (labeled above "Not Used") remains free.

Connecting Tx and Rx Antenna *Signal* Cables (in systems with switching boxes)

Connect antenna signal cables as described below, and as illustrated on page 27:

- Connect J1, in the *IDeal* box, to J2 in switching box #1.
- Connect J3, in switching box #1 to J2 in switching box #2.
- Connect J3, in switching box #2 to J2 in switching box #3.

Connect Antenna *Select* Cables (in systems with switching boxes)

Connect antenna *select* cables as described below, and as illustrated on page 28 (On the switching box PCBs, wire colors are printed at connectors):

- Connect J11 (Box select 1) in the *IDeal* box to J1 of Switching box No. 1.
- Connect J10 (Box select 2) in the *IDeal* box to J1 of Switching box No. 2.
- Connect J9 (Box select 3) in the *IDeal* box to J1 of Switching box No. 3.

Connecting the Gate Switches

Connect gate switches to J7 and J8 in the *IDeal*. These switches must supply a floating contact signal and should be connected as illustrated below, and as printed on the P.C.B. next to J7 and J8.

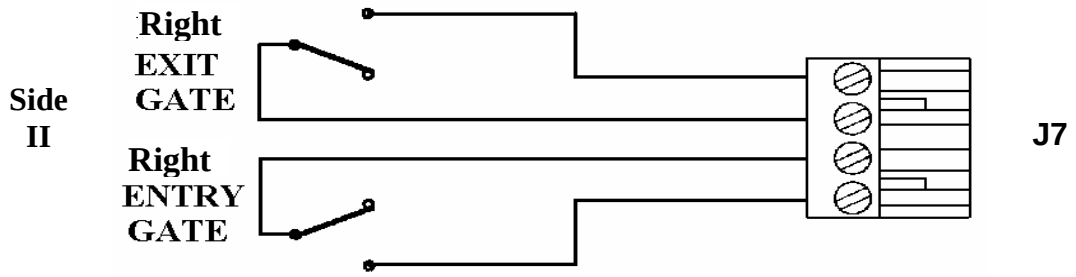

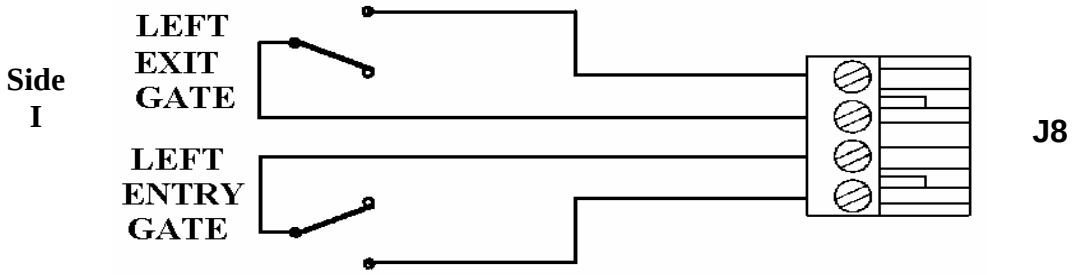

Connecting the Power Supply

After all other lines are connected, connect the power supply to the *IDeal* box. The *IDeal* unit is powered by a 24 ±2.4 VAC. The power line coming from the transformer is a three-wire cable, connected to connector J3.

Do NOT connect the *IDeal* to the same power supply that is used for the milk meters.

Warnings:	The ground of the main power supply must NOT be connected to the *IDeal* box. Assure that the point to which this wire is connected is a good grounding, whether it is the metallic frame of the building, or a special grounding electrode mounted in the ground. When inserting the terminal block into connector J3, ensure that the ground wire connects to pin **GND**. Incorrect wiring may damage the PCB. 24V AC GND ■ ○ ○ J3

When finished connecting wires to connectors, adjust cables to an appropriate length inside the box, then tighten grommet nuts, and close the box.

Chapter 6: Testing

After the installation and/or when an identification fault occurs, test for identification range. There is more than one way to carry out this procedure, but the sequence of actions is always the same:

- Initiate an identification request in the antenna.
- Test antenna range with a test tag.
- If necessary, adjust the Tx voltage, or replace the faulty antenna.

To initiate an identification request of an antenna, you may use an "AFI" program (i.e. start a milking session), an "AFITEST" program, or the self-test mode of the *IDeal*.

Testing and Adjusting Effective Antenna Ranges

- To start the *IDeal* self-test mode, the fourth dip switch at SW2 must be set to TEST.

A special test tag is needed for adjusting antenna ranges.

a test tag
(high frequency P/N 4086388, low frequency P/N 4087388)

Antenna ranges can be adjusted by:

- *Increasing* power to *all* antennas, to increase ranges in *all* antennas. This is done by adjusting potentiometer P2, as described on page 11.
- Reception at *individual* antennas can be *reduced* by adding a resistor, as described on page 39.

When in the self-test mode, the *IDeal* operation will be determined according to gate switch positions. The table on page 37 describes the relationship between gate positions and the operation of the test sequence.

Note	The *IDeal* identification system has a mechanism to prevent the same cow from being identified at two stalls: If a cow is identified by an antenna, And then the same cow is identified in the *next* stall, Then the *IDeal* signal request returns to the original stall where the cow was first identified.

Because of the mechanism described in the note above, two normal tags are needed to advance the *IDeal* search from one stall to another. Testing of ranges is done with the test tag. The three tags are referred to as: Tag 1, Tag 2 and Test Tag.

When adjusting effective Tx range of antennas, check the transmission field around the antenna. Ensure that the field covers the entire area in which the cow's tag carrying leg may be placed, when the cow is being milked. As well, check that the field does not overlap into the field of neighboring antennas.

Test antenna ranges as follows:

1. Set the *IDeal* to Test mode:
   a. Turn off power to the *IDeal* box.
   b. At dipswitch SW2 on the IDeal PCB, set the switch #4 to TEST.
   c. Turn on power to the *IDeal* box.
2. Open or close gates for the required test mode, according to the table on the opposite page.
3. Test the antenna's *transmitting* range.
   a. Set the test tag to the *non transmitting* mode (both switches OFF).
   b. Place the test tag about 1 meter (3' 3") away from the first antenna. Slowly move it towards the antenna until the indicator on the test tag box starts to blink. This is the antenna's transmitting range. Mark it on the floor.
4. Test the antenna's *receiving* range.
   a. Set the test tag to the *transmitting* mode (both switches ON).
   b. Place the test tag about 1 meter (3' 3") away from the first antenna. Carefully observe the antenna number and Rx LED on the main display of the *IDeal*. Slowly move the test tag towards the antenna until the Rx LED flickers and the antenna number advances to the next antenna. This indicates that the *IDeal* has received the signal. This is the antenna's receiving range. The transmitting range should be the same as the receiving range. The Rx LED should flicker strongly *only once*; if not, check for interference in the parlor. (When there is no identification activity, check that the Rx Data LED does not flicker or glow.)
5. Place Tag 1 beside the antenna you have just checked. This causes:
   - Tag 1 to be the "identified cow" at the antenna,
   - The *IDeal* signal request to advance to the next antenna,

Note	If you want to recheck the previous stall, then the *IDeal* signal request must be returned to the previous stall. In order to return the signal request to the previous stall, place the *same* tag you used to advance the signal request beside the *next* antenna.

- At the next antenna, the *IDeal* will receive the test tag signal (withot returning to the previous antenna).

6. Repeat the mapping procedure for antenna 2 (as described in steps 3 and 4).
7. Use Tag 2 to advance the I.D. request to antenna 3.
8. Repeat the same procedure for all antennas, using Tag 1 to advance I.D. request from odd to even stalls, and Tag 2 to advance from even to odd stalls.
9. Return the *IDeal* to normal operation mode:
   a. Turn off power to the *IDeal* box.
   b. At dipswitch SW2 on the *IDeal* PCB, set the switch #4 to RUN.
   c. Turn on power to the *IDeal* box.

	GATE POSITIONS				
	Left Entry Gate Position	**Left Exit Gate Position**	**Right Entry Gate Position**	**Right Exit Gate Position**	**IDeal Function**
1	Open	Open	Open	Open	The I.D. request is initiated at stall (antenna) No.1, advancing from one stall to the next, when a tag answer is received. The I.D. requests advance from stall 1 to 48, and back to stall No.1.
2	Open	Closed	Open	Open	The same sequence as in 1, though for stalls 1-16 only. After the I.D. request arrives at stall 16, the I.D. request advances to stall 1 as a tag response is received.
3	Open	Open	Open	Closed	The test is at stalls 17 to 32 (second switching unit), starting at stall 17, and returning to 17 after a tag reply is received at stall 32.
4	Open	Closed	Open	Closed	The I.D. request is initiated at stalls 1 and 17 together, advancing in two separate channels (as in 2 and 3).
5	Closed	Open	Open	Open	The I.D. request advances from stall 1 to 16, and back to 1 again without any tag response, scanning the antennas.

6	Open	Open	Closed	Open	Same as 5, though for stalls 17 to 32.
7	Closed	Open	Closed	Open	Scanning stalls 1 thru 16 and 17 thru 32 simultaneously.
8	Closed	Closed	Closed	Closed	Scanning antennas 1 thru 48 and returning to 1 again.

Adding a Resistor to Reduce Transmission Range

If a reduction of transmission range is required, a resistor may be added at the connector of each antenna. Connect resistors as follows:

1. Separate the black and the blue wires.
2. Connect the black wire to the **Blk** pin.
3. Connect the blue wire to the **BL** pin, next to the **Blk** pin.
4. Connect the resistor between the **Blk** and **BL** pins, as printed on the PCB.

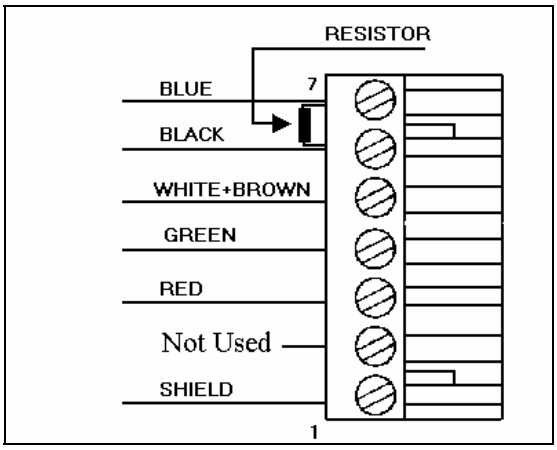

For a Tx range reduction a ½ Watt 10 - 400Ω resistor is used, depending on the required amount of Tx range reduction.

Note : The "GND" Pin (labeled above "Not Used") remains free.

Locating a Faulty Antenna

To test a specific antenna, suspected of having faulty operation, follow these steps:

1. Set the *IDeal* to test mode.
2. Advance the identification request to the desired antenna (using two tags - 1 & 2).
3. Test the antenna's effective range as described in step 4 on page 36.
4. If the antenna is defective, replace it.