audio-technica

ATH-CKS30TW+

Wireless Headphones

User Manual

English

Safety precautions

Although this product was designed to be used safely, failing to use it correctly may result in an accident. To ensure safety, observe all warnings and cautions while using the product.

Cautions for the headphones

- Do not use the product near medical equipment. Radio waves may affect cardiac pacemakers and medical electronic equipment. Do not use the product inside medical facilities.
- When using the product in aircraft, follow airline instructions.
- Do not use the product near automatic control devices such as automatic doors and fire alarms. Radio waves may affect electronic equipment and cause accidents due to malfunction.
- Do not disassemble, modify or attempt to repair the product to avoid electric shock, malfunction or fire.
- Do not subject the product to strong impact to avoid electric shock, malfunction or fire.
- Disconnect the product from a device if the product begins to malfunction, producing smoke, odor, heat, unwanted noise or showing other signs of damage. In such a case, contact your local Audio-Technica dealer.
- Do not put foreign matter such as combustible materials, metal, or liquid in the product.
- Do not cover the product with a cloth to avoid fire or injury by overheating.
- Follow applicable laws regarding mobile phone and headphone use if using headphones while driving.
- Do not use the product in places where the inability to hear ambient sound presents a serious risk (such as at railroad crossings, train stations, and construction sites).
- The product effectively shields external sound, so you may not hear sound around you clearly while wearing the product. Adjust the volume to a level where you can still hear background sound and monitor the area around you while listening to music.
- Store the product out of the reach of small children.
- To prevent damage to your hearing, do not raise the volume too high. Listening to loud sound for an extended period may cause temporary or permanent hearing loss.
- Discontinue use if skin irritation results from direct contact with the product.
- If you begin to feel unwell while using the product, discontinue use immediately.
- When removing the product from your ears, check to make sure the eartips are still attached to the main unit. If the eartips become lodged in your ears and you are unable to remove them, consult a physician at once.
- If you develop an itch from wearing the product, discontinue use.

Cautions for charging case

- Do not disassemble, modify or attempt to repair the product to avoid electric shock, malfunction or fire.
- Do not subject the product to strong impact to avoid electric shock, malfunction or fire.
- Do not handle the product with wet hands to avoid electric shock or injury.
- Disconnect the product from a device if the product begins to malfunction, producing smoke, odor, heat, unwanted noise or showing other signs of damage.
  In such a case, contact your local Audio-Technica dealer.
- Do not allow the product to get wet to avoid electric shock or malfunction.
- Do not put foreign matter such as combustible materials, metal, or liquid in the product.
- Do not cover the product with a cloth to avoid fire or injury by overheating.

- Do not charge the product if water or foreign matter is inside the battery jack or USB charging cable. Doing so may cause corrosion, heat generation, smoke, fire, or other malfunction or electric shock in the battery jack or USB charging cable.
- Do not charge the battery if the terminal of the USB charging cable is bent, loose, or damaged. Doing so may cause heat generation, smoke emission, fire or electric shock.
- When charging, make sure to use the included USB charging cable.
- Do not charge with devices that have quick-charge functionality (with a voltage of 5 V or more). Doing so may cause the product to malfunction.
- Do not store the product in direct sunlight, near heating devices, or in hot, humid, or dusty places because such storage could cause malfunction or defect.
- Do not put the product close to fire because that could cause deformation or malfunction.
- Do not use benzine, paint thinners and electrical contact cleaner, etc. because use of such material could cause deformation or malfunction.

Cautions for rechargeable battery

The headphones and charging case are equipped with a rechargeable battery (lithium-ion battery).

- If battery fluid gets into eyes, do not rub them. Rinse thoroughly with clean water such as tap water and consult a doctor immediately.
- If battery fluid leaks, do not touch fluid with bare hands. If fluid remains inside the product, it may cause malfunction. If battery fluid leaks, contact your local Audio-Technica dealer.
  - If fluid gets in your mouth, gargle thoroughly with clean water such as tap water and consult a doctor immediately.
  - If your skin or clothing comes in contact with fluid, immediately wash the affected skin or clothing with water. If you experience skin irritation, consult a doctor.
- To avoid leakage, generation of heat or explosion:
  - Never heat, disassemble or modify the battery, nor dispose of it in a fire.
  - Do not attempt to pierce with a nail, hit with a hammer or step on the battery.
  - Do not drop the product or subject it to strong impact.
  - Do not get the battery wet.
- Do not use, leave or store the battery in the following places:
  - Area exposed to direct sunlight or high temperatures and humidity
  - Inside of a car under the blazing sun
  - Near heat sources such as heat registers
- Charge only with the included USB cable to avoid malfunction or fire.
- The internal rechargeable battery of this product cannot be replaced by the user. The battery may have reached the end of its service life if the usage time becomes significantly shorter even after the battery has been fully charged. If this is the case, the battery needs to be repaired. Contact your local Audio-Technica dealer for repair details.
- When the product is disposed of, the built-in rechargeable battery needs to be discarded properly. Contact your local Audio-Technica dealer to learn how to properly dispose of the battery.

Notes on use

- Be sure to read the connected device's user manual before use.
- Audio-Technica will not be liable in any way for any loss of data in the unlikely event that such losses should occur while using the product.
- On public transportation or in other public places, keep the volume low so as not to disturb other people.
- Minimize the volume on your device before connecting the product.
- When using the product in a dry environment, you may feel a tingling sensation in your ears. This is caused by static electricity accumulated on your body, not by product malfunction.
- Do not subject the product to strong impact.
- Do not store the product in direct sunlight, near heating devices, or in hot, humid, or dusty places.
- When the product is used for a long time, the product may become discolored due to ultraviolet light (especially direct sunlight) and wear.
- If the charging case is placed in a bag while the USB charging cable is still connected, the USB charging cable may become caught, severed, or broken.
- Make sure to hold the plug when connecting and disconnecting the USB charging cable. The USB charging cable may become severed or an accident may occur if you pull on the cable itself.
- When you are not using the USB charging cable, disconnect it from the charging case.
- When you are not using the product, store it in the included charging case.
- If you use eartips other than those included, the headphones may not fit into the charging case, or may not charge. Be sure to use the included eartips.
- When using the product, select the eartips that fit your ears best so the product can be worn securely.
- This product can be used to talk on the phone only when using a mobile telephone network. Support for telephony apps that use a mobile data network is not guaranteed.
- If you use the product near an electronic device or transmitter (such as a mobile phone), unwanted noise may be heard. In this case, move the product away from the electronic device or transmitter.
- If you use the product near a TV or radio antenna, noise may be seen or heard in the television or radio signal. In this case, move the product away from the TV or radio antenna.
- To protect the built-in rechargeable battery, charge it at least once every 6 months. If too much time passes between charges, the life of the rechargeable battery may be reduced, or the rechargeable battery may no longer be able to be charged.
- Charge the product in a well-ventilated place (10 to 35°C (50 to 95°F)) away from direct sunlight. Otherwise, the battery may deteriorate, possibly resulting in shorter periods of continuous use or may fail to charge.
- If the headphones are wet, wipe them with a dry cloth before placing them in the charging case. The charging case is not water-resistant (drip-proof). Do not charge the product if the headphones are wet.
- The hear-through function of the product allows you to hear the sounds around you through the built-in microphone. Depending on the volume of the music being played back, the surrounding sounds may be difficult to hear. In this case, turn down the volume of the music.
- Depending on your surroundings, the ambient sounds may be difficult to hear even when using the product's hear-through function. Do not use the product in places that are dangerous if you cannot hear the surrounding sounds, such as places with heavy traffic.
- Operate the touch sensor with one finger. Operating with a sharp-tipped object, such as a ballpoint pen or pencil, may result not only in incorrect operation, but also damage to the touch sensor.
- Do not touch the touch sensor with your fingertips. Doing so may cause your fingernail to break.

Notes on use

- If the product does not operate at all or as intended when touched, check to make sure that your other fingers, parts of your hand, or clothing items are not in contact when touching. Also, the product may not operate correctly if you are wearing gloves or if your fingertips are too dry.
- The product may not operate correctly if the touch sensor is dirty from sweat. Remove the dirt before operating the product.

Waterproof and dustproof performance

- The waterproof performance of the product is designed to prevent the ingress of liquids from sweating during operation and simple washing (equivalent to IPX5). JIS/IEC protection grade IPX5 means that the headphones are protected against exposure to water jets. The headphones cannot be used in hot and humid places, such as bathrooms.
- The headphones are not completely waterproof. Do not intentionally submerge or use the headphones in water. Also, do not expose the headphones to liquids other than sweat and water (such as soapy water).
- The dustproof performance of the product is designed to prevent the ingress of dust and dirt (equivalent to IP5X). JIS/IEC protection grade IP5X means that the headphones are protected against the ingress of dust that would otherwise hinder operation.
- The waterproof and dustproof specifications of this product apply only to the headphones. The charging case is not waterproof or dustproof.
- Although the headphones have waterproof and dustproof capabilities equivalent to IP55, the part where the sound comes from is not waterproof or dustproof.
- The headphones may not function properly if they become wet. Wipe the headphones with a dry cloth, shake them multiple times to remove any excess water, and allow the headphones to dry thoroughly before use.

About the active noise-cancelling function

The product is designed to use its built-in microphone to pick up noise from the surrounding environment (noise from vehicles, noise from air conditioners, etc.) and to cancel out that noise by producing sounds in negative phase. This results in a reduction in the sounds in your environment.

- The product's noise-cancelling function is mainly effective against noises in the lower frequency range, but not all noises are cancelled.
- Depending on the type of noise (or in quiet locations), you may not notice the noise-cancelling effect.
- A slight humming sound may be heard when using the noise-cancelling function. This is a sound generated by the noise-cancelling function; it is not a malfunction.
- The noise-cancelling effect may vary or a bleep (howling) may occur depending on how you wear the product. In these cases, take off the product and put the product in your ears again correctly.
- To maximize the noise-cancelling effect, select the eartips that offer the best sound insulation for each side to block surrounding sound, and insert the headphones into the ears correctly.
- When you use the product in a train or a vehicle such as bus or truck, noise may be heard depending on rail/street conditions.

For a more comfortable Bluetooth communication experience

The effective communication range of this product varies depending on obstructions and radio wave conditions. For a more enjoyable experience, please use the product as close as possible to the Bluetooth device. To minimize noise and sound disruptions, avoid placing your body or other obstacles between the product's antenna and the Bluetooth device.

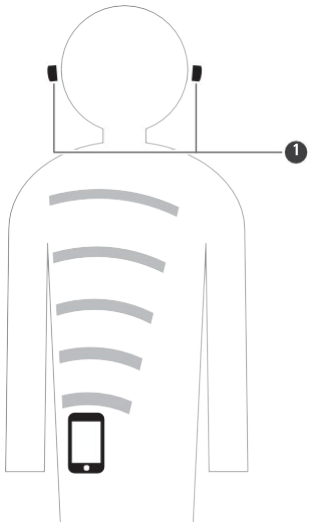

1 Antennas

Part names and functions

Headphones

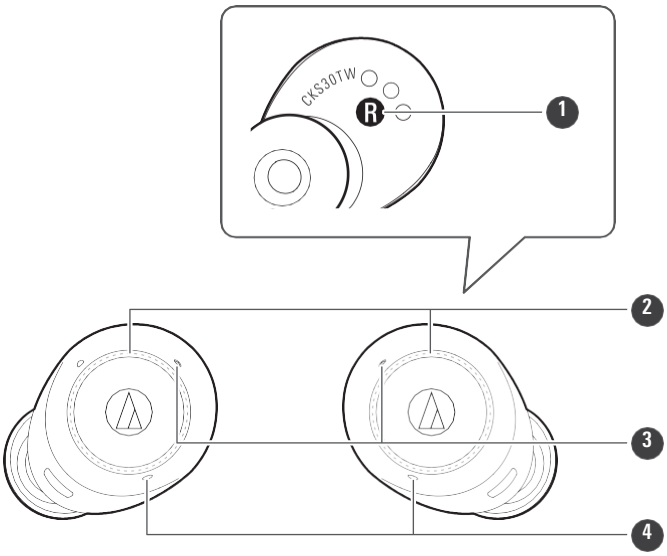

1. **L/R (left/right) indicator**
2. **Touch sensors**
3. **Indicator lamps**

   Display the operating status and battery level of the headphones.
4. **Microphones**

Charging case

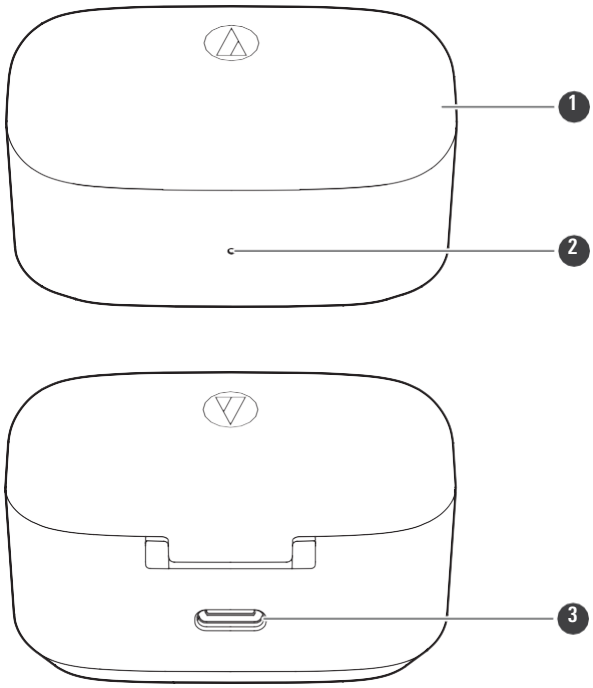

1. **Cover**
2. **Charging indicator lamp**

   Lights/flashes when charging the charging case. Also displays the battery level of the charging case.
3. **Battery jack**

   Use to connect the included USB charging cable and charge the product.

Accessories

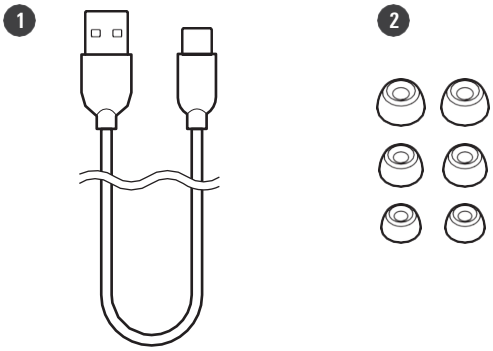

1. **USB charging cable (30 cm (12"), USB Type-A / USB Type-C™)**
2. **Eartips (XS, S, M, L)**

   At the time of purchase, the M-size eartips are attached to the product.

Removing the insulation seals

Remove the insulation seals before use.

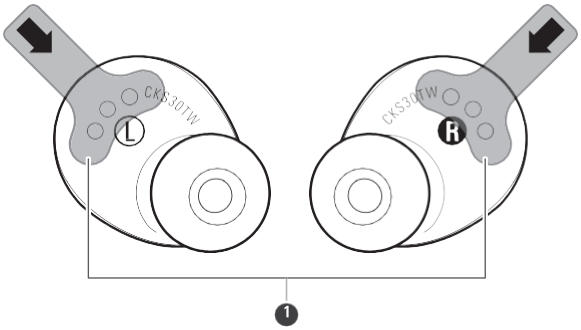

1 Insulation seals

Charging the battery

- Fully charge the battery when using for the first time.
- When the rechargeable battery is running low, the voice guidance will play the message “Low battery”, and the indicator lamp will flash in orange. Charge the battery as soon as possible.
- It takes about 2.5 hours to fully charge the headphones, and about 3 hours to fully charge the charging case. (Charging times may vary depending on usage conditions.)
- Charge the product in a well-ventilated place (10 to 35°C (50 to 95°F)) away from direct sunlight. Charging outside the normal charging temperature range may result in failure to charge or longer charging time. Otherwise, the battery may deteriorate, possibly resulting in shorter periods of continuous use or may fail to charge.

Charging the headphones and charging case

1 **Connect the included USB charging cable (USB Type-C side) to the battery jack of the charging case.**

- The included USB charging cable is designed for exclusive use with the product. Do not use any other USB charging cable.
- When inserting the USB charging cable into the USB port or battery jack, insert it directly (horizontally).

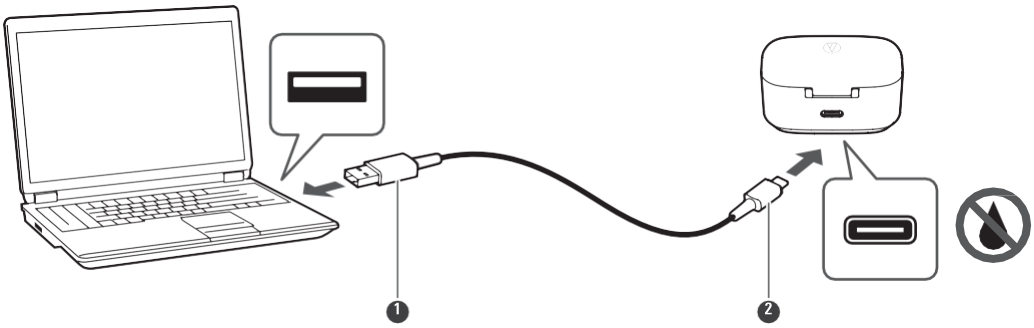

1 USB Type-A
2 USB Type-C

2 **Place the headphones in the charging case.**

- When charging the headphones, make sure the indicator lamps on the headphones light up. If they do not light up, remove the headphones and place them in the case again.

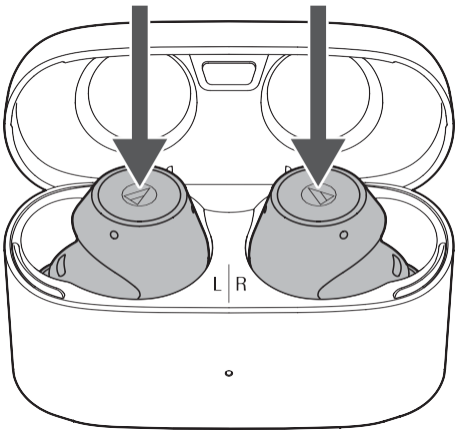

3 **Connect the included USB charging cable (USB Type-A side) to the computer to start charging.**

- While charging, the charging indicator lamp on the charging case lights/flashes as follows. (It may take several seconds for the charging indicator lamp to light.)

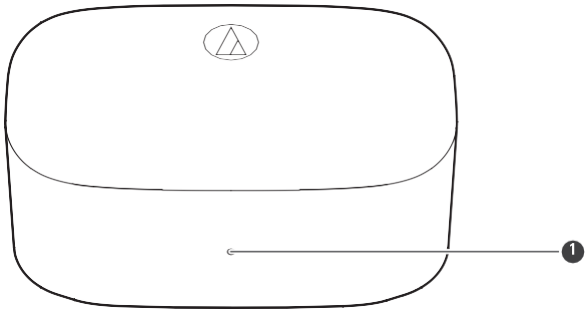

1 Charging indicator lamp

Charging indicator lamp	Status
Flashing orange -> Flashing white	Charging (The indicator lamp flashes orange when the battery level is low and changes to white as the battery level increases.)
Flashing white	Charging
Lights in white for 10 seconds, and then turns off.	Charging complete
Flashing orange quickly	Charging error[1]
Alternating between flashing white and orange	Error detected[2]

[1] The charging case or headphones may be hot. Allow the temperature of the product to cool sufficiently before charging in a well-ventilated place (10 to 35°C (50 to 95°F)) away from direct sunlight.

[2] Discontinue use of the product and contact your local Audio-Technica dealer for repair.

4 **When charging is complete, disconnect the USB charging cable (USB Type-A side) from the computer.**

5 **Disconnect the USB charging cable (USB Type-C side) from the battery jack on the charging case.**

- When charging, make sure to use the included USB charging cable. The product may not charge with cables other than the included USB charging cable.
- Always make sure the headphones are not wet before charging. The headphones may not operate correctly or may not turn on if they are wet. Wipe the headphones with a dry cloth, shake them multiple times to remove any excess water, and allow the headphones to dry thoroughly before charging.

Charging headphones without the USB charging cable

A rechargeable battery is built into the charging case. If you have charged the charging case, you can charge the headphones without using the USB charging cable.

1 **Place the headphones in the charging case.**

- While charging, the indicator lamp lights as follows. (It may take several seconds for the indicator lamp to light.)
- When charging the headphones, make sure the indicator lamps on the headphones light up. If they do not light up, remove the headphones and place them in the case again.

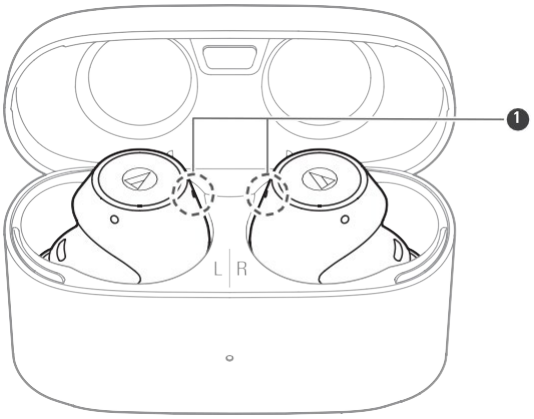

1 Indicator lamps

Indicator lamp	Status
Lights in white	Charging
Off	Charging complete / Charging case battery has no power

Checking the battery level of the charging case

When opening/closing the cover of the charging case, the charging indicator lamp lights to indicate the battery level of the charging case.

1 **Open/close the charging case cover.**

- The charging indicator lamp lights as follows. The color of the charging indicator lamp indicates the battery level.
- If the charging indicator lamp flashes orange twice in a row, the charging case is fully discharged. Charge the charging case.

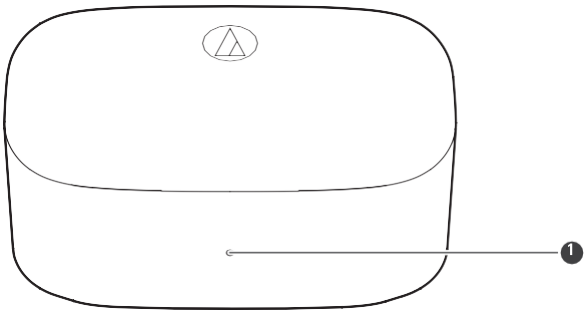

1 Charging indicator lamp

Charging indicator lamp	Status
Lights in orange	Battery level is low
Lights in white	Battery level is sufficient

Power supply ON/OFF

Turning on the product

1 **Remove the headphones from the charging case.**

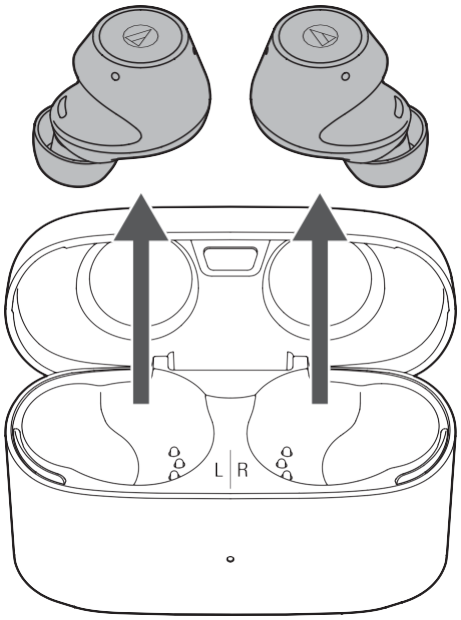

» **The power will turn on automatically, and the indicator lamps will light in white and then flash. Voice guidance is played.**

- It may take several seconds for the indicator lamp to light.
- See "Voice guidance" (p. 28) for more information on voice guidance.

Turning off the product

1 **Place the headphones in the charging case.**

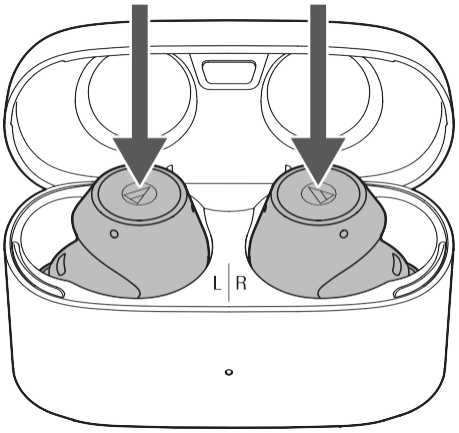

» **The power will turn off automatically.**

Connecting via Bluetooth

To connect the product to a Bluetooth device, the product needs to pair (register) with the device.

Pairing a Bluetooth device

- Read the user manual for the Bluetooth device.
- Place the Bluetooth device within 1 m (3.3') of the product to perform pairing correctly.
- Wear the product to hear voice guidance during pairing.

1 **Remove the headphones (L (left) and R (right)) from the charging case.**

- The indicator lamps will light in white, and then flash. Depending on the order the L (left) and R (right) side headphones are removed from the charging case, the indicator lamp on one side will flash white quickly, and the other will flash white slowly.

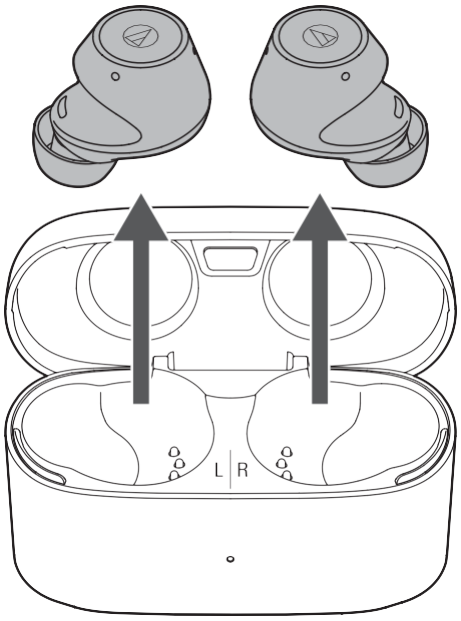

2 **Use your Bluetooth device to begin the pairing process and search for the product. When your Bluetooth device finds the product, “ATH-CKS30TW+” will be displayed on the device.**

- For information about using your Bluetooth device, refer to the device’s user manual.

3 **Select “ATH-CKS30TW+” to pair the product and your Bluetooth device.**

- Some devices may ask for a passkey. In this case, enter “0000”. The passkey may also be called a passcode, PIN code, PIN number, or password.

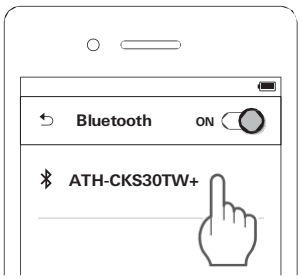

» **The voice guidance will play the message "Connected". This indicates pairing was performed correctly and is now complete.**

Pairing with Fast Pair

In one touch, the product enables quick, effortless Bluetooth pairing with your Android devices. You can even check to see where you last placed it.

Fast Pair

1 **Turn on the Bluetooth function on an Android device configured with a Google account.**

2 **Remove the headphones (L (left) and R (right)) from the charging case and bring them close to the Android device.**

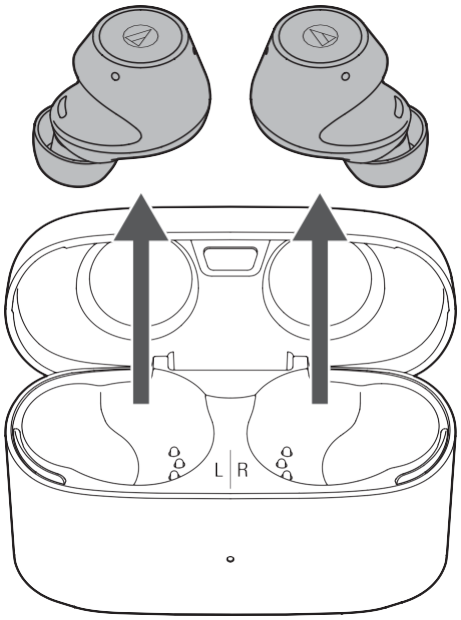

3 **Touch the pairing notification that appears on your Android device.**

» **The voice guidance will play the message "Connected" when pairing is complete.**

About pairing

When connecting a new Bluetooth device, you need to pair it with the product. Once the Bluetooth device and the product are paired, you do not need to pair them again. The product supports multipairing, in which a connection history is saved. However, in the following cases you will need to pair again even if the Bluetooth device was paired once:

- If the product is deleted from the Bluetooth device's connection history.
- If the product is sent out for repair.
- If the product is reset.

Multipoint function

The product supports multipoint, which allows two Bluetooth devices to be connected at the same time. While you are listening to music with one device, you can answer a call that comes in from the other device. It is convenient if you have two smartphones, for example.

- Audio-Technica does not guarantee the operation of all combinations of Bluetooth devices.

Connecting using multipoint

1 **Pair with the first Bluetooth device.**

2 **Pair with the second Bluetooth device within 30 seconds of pairing with the first Bluetooth device.**

- If the product does not connect, restart its power.
- Up to two Bluetooth devices can be connected at the same time with multipoint. To connect a third Bluetooth device, disconnect one of the connected devices.
- Music cannot be played from two devices at the same time. If music is playing on the first Bluetooth device, playback will not be switched even if music is played on the second device. The music playing on the first device must be stopped to play music from the second device.

Wearing the product

Insert the side of the product marked “L” (left) into the left ear and the side marked “R” (right) into the right ear.

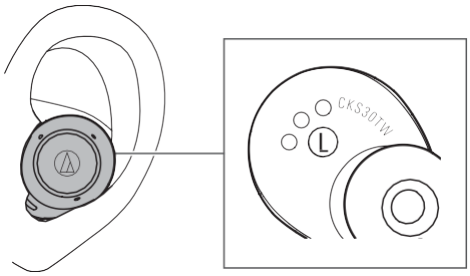

- When using the product, select the eartips that fit your ears best, and wear the product securely.

Touch sensors

The product has touch sensors. When performing operations, touch the sensors using the pad of your finger, not the fingertip.

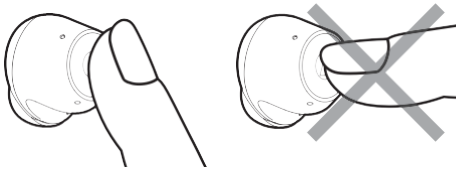

- Operate the touch sensor with one finger. Operating with a sharp-tipped object, such as a ballpoint pen or pencil, may result not only in incorrect operation, but also damage to the touch sensor.
- Do not touch the touch sensor with your fingertips. Doing so may cause your fingernail to break.
- If the product does not operate at all or as intended when touched, check to make sure that your other fingers, parts of your hand, or clothing items are not in contact when touching. Also, the product may not operate correctly if you are wearing gloves or if your fingertips are too dry.
- The product may not operate correctly if the touch sensor is dirty from sweat. Remove the dirt before operating the product.

Using the product

The product can use Bluetooth wireless technology to connect to your device and play music, receive phone calls, etc. Use the product for whichever of these purposes suits your needs. Note that Audio-Technica cannot guarantee the operation of displays, such as the battery level display, or applications via Bluetooth devices.

Listening to music

- To connect for the first time, pair the product and your device via Bluetooth wireless technology. If you have already paired the product and your Bluetooth device, turn on the Bluetooth device's Bluetooth connection before turning on the product.
- Use your Bluetooth device to start playback, referring to the device's user manual as necessary.

1 **Remove the headphones from the charging case and place them in your ears.**

2 **Start playback on your Bluetooth device.**

3 **Long touch (about 2 seconds) the touch sensor on the L (left) or R (right) side headphone once or twice in a row to adjust the volume (up or down).**

4 **To pause music, touch the touch sensor on the R (right) side headphone.**

- Playback will be started or paused with every touch.

- Listening to music is also possible with only one headphone by removing only one side from the charging case and putting it in your ear. When you use only one headphone, some functions are not available depending on which side is worn. Use the Bluetooth device for operation in such cases.

R (right) side headphone touch sensor operations

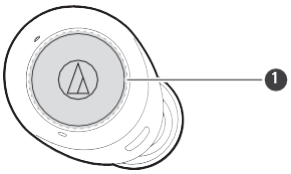

1 Touch sensor

Operation	Function
Touch	Starts or pauses playback.
Touch (twice)	Plays the next track.
Touch (three times)	Plays the previous track / returns to the start of the track.
Long touch (about 2 seconds)	Increases the volume by 1 level.

- The controls explained above may not be available on some smartphones.

L (left) side headphone touch sensor operations

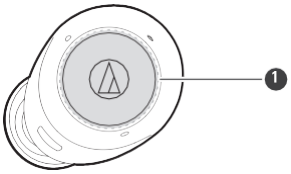

1 Touch sensor

Operation	Function
Long touch (about 2 seconds)	Decreases the volume by 1 level.

- The controls explained above may not be available on some smartphones.

Talking on the phone

If your Bluetooth device supports telephone features, you can use the product to talk on the phone.

1 **Remove the headphones from the charging case and place them in your ears.**

2 **Make/receive calls with your Bluetooth device.**
- When your Bluetooth device receives a phone call, the product sounds a ringtone.
- If a call is received while you are listening to music, music playback is paused.

3 **Touch the touch sensor on the headphones (L (left) or R (right) side) to answer incoming calls.**
- Calls can be answered from either the L (left) or R (right) side headphone.

4 **Touch the touch sensor on the L (left) side headphone once or twice in a row to adjust the volume (up or down).**

5 **To end a call, touch and hold (about 2 seconds) the touch sensor on the L (left) or R (right) side headphone.**

- Calls can be ended from either the L (left) or R (right) side headphone.
- If the call was received while listening to music, playback is resumed.
- Music playback may not be resumed on some Bluetooth devices. In this case, music playback must be started manually.

- Making/receiving calls is also possible with only one headphone by removing only one side from the charging case and putting it in your ear. When you use only one headphone, some functions are not available depending on which side is worn. Use the Bluetooth device for operation in such cases.

R (right) side headphone touch sensor operations

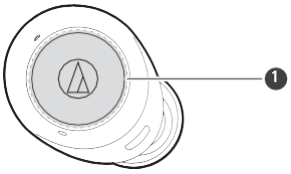

1 Touch sensor

Operation	Function
Touch	Receiving a call: Answers the call.
Press (twice)	Mutes the microphone. [1]
Touch and hold (about 2 seconds)	Receiving a call: Rejects the call. Making a call: Cancels the call. During a call: Ends the call.

[1] The mute operation using the touch sensor only mutes the headphones and does not activate the mute function on the Bluetooth device.

- The controls explained above may not be available on some smartphones.

L (left) side headphone touch sensor operations

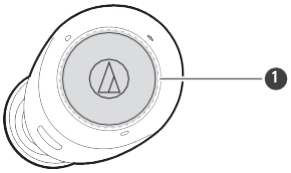

❶ Touch sensor

Operation	Function
Touch	Receiving a call: Answers the call. During a call: Increases the call volume by 1 level.
Touch (twice)	During a call: Decreases the call volume by 1 level.
Touch and hold (about 2 seconds)	Receiving a call: Rejects the call. Making a call: Cancels the call. During a call: Ends the call.

- The controls explained above may not be available on some smartphones.

Equalizer function

This function switches the equalizer function setting to change the sound quality. The equalizer is set to “Bass Boost - Deep” for increased bass at the time of purchase.

1 **Touch the touch sensor on the L (left) side headphone 3 times.**

» **The equalizer function will be turned on/off with every touch 3 times.**

Ambience control

The product includes an ambience control function for switching between the noise-cancelling function and hear-through function. The functions can be switched from off (default), to hear-through or noise-cancelling (default).

Function	Description
Noise-cancelling function	The microphone built into the product detects ambient noise and outputs a sound-cancelling signal to effectively reduce noise.
Hear-through function	This function allows you to hear surrounding sound via the built-in microphone while you listen to music.

1 **Touch the touch sensor on the L (left) side headphone 2 times.**

» **The functions can be switched from off (default) to hear-through or noise-cancelling (default).**

- Depending on the volume of the music being played back, the surrounding sounds may be difficult to hear. In this case, turn down the volume of the music.
- Depending on your surroundings, the ambient sounds may be difficult to hear even when using the product's hear-through function. Do not use the product in places that are dangerous if you cannot hear the surrounding sounds, such as places with heavy traffic.
- When the hear-through function is turned ON, do not cover the microphone with your hand. If you do so, a loud sound (howling) will be emitted, and it may adversely affect your hearing ability.

Equalizer settings

Use the “CONNECT” app to change the equalizer function setting applied with the touch sensor.

Equalizer	Description
Bass Boost - Deep	Increased bass to get you up and moving. Sound is closer to the ultra-low frequency with an enhanced sense of depth for enjoying long-lasting bass.
Bass Boost - Beat	Crisp, tight bass. The sharp low frequencies combined with well-balanced mid and high frequencies produce a fuller sense of power and realism.
Dynamic	Crisp sound that emphasizes the low and high frequencies. The vibrant sound quality of this setting is recommended for becoming immersed in games and other media.
Vocal	Sound that emphasizes the natural connections between low- and high-frequency ranges. This setting offers clearer voices and dialogue while also highlighting the vocal-centric middle range.
Clear	Sound that emphasizes crispness in high frequencies. The result is clean and clear high frequencies with delicate lingering notes.

Auto power off function

The product automatically turns off after 5 minutes of not being connected to a device.

App for smartphones

This product is compatible with our “CONNECT” app. The app gives you convenient access to various functions. It also allows you to update the product's firmware.
https://app.at-globalsupport.com

audio-technica

CONNECT App
iOS, Android

What you can do with the app

The app allows you to use the following functions. For details, refer to the app screen.

Auto power off function

The product automatically turns off after 5 minutes of not being connected to a device.

App for smartphones

This product is compatible with our “CONNECT” app. The app gives you convenient access to various functions. It also allows you to update the product's firmware.
https://app.at-globalsupport.com

audio-technica

CONNECT App
iOS, Android

What you can do with the app

The app allows you to use the following functions. For details, refer to the app screen.

Function	Description
Volume Adjustment Level	The number of volume adjustment steps can be changed.
Ambience Control	You can switch to the hear-through function. You can also adjust the volume of external sounds that are captured.
Talk-Through	You can change the talk-through type and adjust the music playback volume for talk-through.
Equalizer	You can configure the equalizer settings.
Low Latency Mode	Low latency mode reduces sound delay when playing games or watching videos. Bluetooth communication can be easily affected by obstacles and radio wave conditions. Turn this mode off in such situations.
L/R Balance Adjustment	You can adjust the left-right volume balance.
Side Tone	You can turn on or off the side tone function that captures your own voice and ambient sounds through the microphone during a call (the function is on at the time of purchase).
Key Assign	You can set the functions to be assigned to the touch sensors.
Touch Sensors	You can turn the touch sensors on or off and adjust the touch sensor sensitivity.
Voice Guidance	You can change the product’s voice guidance to a confirmation tone, or switch the voice guidance language.
Connected Device Management	You can switch the connection by selecting the Bluetooth device you want to connect from the list of Bluetooth devices you have connected to so far.

Indicator lamp display

Pairing

Status	Indicator lamp display pattern
Searching for devices	○ - ○ - ○ • • • Flashing white (gradually lighting up) (Depending on the order the L (left) and R (right) side headphones are removed from the charging case, the indicator lamp on one side will flash white quickly, and the other will flash white slowly.)

Connecting

Status	Indicator lamp display pattern
Connecting	○-----○-----○ • • • Flashing white in 4-second intervals
Music is playing	---------- • • • Off

Battery level

Status	Indicator lamp display pattern
Battery level is low	White in the pairing or connection status turns orange.

Voice guidance

The product plays English voice guidance in the following situations.
Use the “CONNECT” app to change the voice guidance language.

Situation	Voice guidance
Bluetooth is connected	Connected
Bluetooth is disconnected	Disconnected
OFF (ambience control)	Off
Hear-through function ON (ambience control)	Hear-through
Noise-cancelling function ON (ambience control)	Noise-cancelling
Equalizer function on	Equalizer on
Equalizer function off	Off
Battery level is low	Low battery
No power due to dead battery	Please recharge

Cleaning

Get into the habit of regularly cleaning the product to ensure that it will last for a long time. Do not use alcohol, paint thinners, or other solvents for cleaning purposes.

Headphones

- Remove the eartips when cleaning the headphones.
- The headphones may not function properly if they become wet. Wipe the headphones with a dry cloth, shake them multiple times to remove any excess water, and allow the headphones to dry thoroughly before use.
- Natural oils from the skin are particularly likely to build up on the eartip attachment parts (see figure). If these areas are not cleaned, the eartips can become detached. Clean them regularly. Do not touch the areas where sound is produced as they are delicate. Doing so may result in malfunction.

1 **Remove the eartips and wash the headphones with water.**

- Do not use soapy water. Wash in fresh water at normal temperature (10 to 35°C (50 to 95°F)) or a gentle flow of tap water.
- Wash the headphone as shown in the figure. Do not apply water directly to the sound reproduction part, the microphone, or the vent.
- Do not wash with a brush or sponge. Wash by hand.

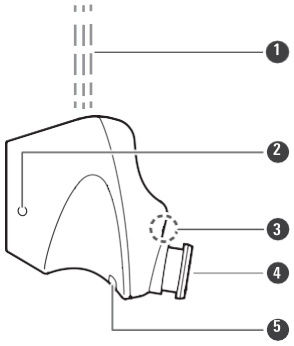

1. Fresh water or gentle-flowing tap water
2. Microphone
3. Eartip attachment part
4. Sound reproduction part
5. Vent

2 **After washing, wipe any surface moisture thoroughly with a dry, clean, and soft cloth.**

3 **Hold the headphone firmly, press it against a dry cloth, and then shake it until no more water droplets come off.**

- Although the headphones have a waterproof rating equivalent to IPX5, the sound reproduction parts, microphones, and vents are not water resistant. If any water enters the interior of the headphones, no sound will be reproduced, or sounds may be difficult to hear. In such cases, press the headphone against a dry cloth, and then shake it approximately 20 times with the sound reproduction part, microphone, or vent positioned downward.

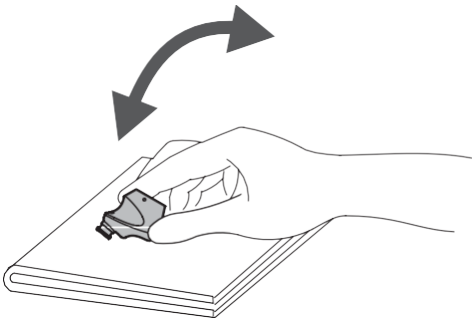

4 **Wipe off any water that remains in the sound reproduction part, microphone, or vent by gently pressing the headphones against a dry, clean, and soft cloth.**

- Do not wipe off any water in the gap with a cotton swab, etc.

5 **Dry the product thoroughly in a well-ventilated shady location.**

- Do not apply hot air such as by using a dryer.

- If the product will not be used for an extended period of time, store it in a well-ventilated place free from high temperatures and humidity.

Charging case / USB charging cable / eartips

- Wipe any dirt off the charging case with a dry cloth.
- Immediately wipe off any moisture such as sweat that has splashed onto the charging case battery jack, the charging terminals, etc. Failure to do so may result in a malfunction due to corrosion.
- Wipe away any perspiration or dirt from the USB charging cable with a dry cloth immediately after use. Failure to clean the cable may cause it to deteriorate and harden over time, resulting in malfunction.
- If the USB terminal of the charging cable is dirty, wipe it off with a dry cloth.
- Clean the eartips by removing them from the headphones and manually cleaning them with a diluted mild detergent. After cleaning, dry before using again.

- If the product will not be used for an extended period of time, store it in a well-ventilated place free from high temperatures and humidity.

Eartips

Eartip size

The product includes silicone eartips in 4 sizes (XS, S, M, and L). At the time of purchase, the M-size silicone eartips are attached. To ensure the best sound quality, select the eartip size that is best suited for you, and adjust the eartips inside your ears for a snug fit. It may be difficult to hear bass sounds if the eartips do not fit snugly in your ears.

Replacing the eartips

Remove the old eartip and attach the new eartip by pushing it onto the headphone at an angle. Push firmly on the eartip so that the inside of the eartip expands, and push the eartip onto the post as far as it will go.

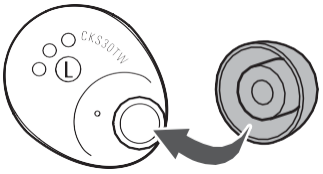

- Eartips are consumable parts that degrade through storage and use. If the eartips are loose and easily removed or if they appear to have degraded, purchase replacements.

- Periodically remove and clean the eartips as they become dirty easily. Using dirty eartips may cause the headphones themselves to become dirty, resulting in deteriorated sound quality.
- When reattaching eartips that were previously removed, be sure to check that they are securely attached. Injury or illness may occur if the eartips become detached and are left inside the ear.

Forced pairing mode / reset

If the product does not connect to a device (forced pairing mode)

If pairing cannot be cancelled or is not successful, you can use forced pairing mode to perform pairing again.

- When operating, hold the headphones so that they stay in the charging case.

1 **About 5 seconds after both headphones (L (left) and R (right) sides) are placed in the charging case (with battery remaining), touch and hold (about 4 seconds) the touch sensors of both headphones.**

- You can operate both headphones simultaneously or one headphone at a time.

2 **When the indicator lamps on both headphones light in orange, release your fingers and remove the headphones from the charging case.**

» **The product will switch to the "searching for devices" (pairing mode) state and you will be able to pair with your desired Bluetooth device.**

- If the procedure cannot be completed as expected, remove the headphones from the charging case again and repeat the procedure from the beginning.

If the product operates abnormally (reset)

- Reset the product.
- When operating, hold the headphones so that they stay in the charging case.

1 **About 5 seconds after both headphones (L (left) and R (right) sides) are placed in the charging case (with battery remaining), touch and hold (about 10 seconds) the touch sensors of both headphones.**

- About 4 seconds into touching and holding the sensors, the indicator lamps will light in orange. Continue touching and holding the sensors.

2 **When the indicator lamps on both headphones begin flashing orange, release your fingers and remove the headphones from the charging case.**

- You can operate both headphones simultaneously or one headphone at a time.

» **Reset is complete.**

3 **Remove the product from the list of registered devices on your Bluetooth device.**

4 **Pair the product again.**

- If the procedure cannot be completed as expected, remove the headphones from the charging case again and repeat the procedure from the beginning.
- The “CONNECT” app can also be used to perform a reset.

Troubleshooting

Power is not supplied

- Charge the product.

Unable to pair

- Confirm that the Bluetooth device communicates using Ver. 2.1+EDR or higher.
- Place the product and the Bluetooth device within 1 m (3.3') of each other.
- Set the profiles for the Bluetooth device. For procedures on how to set profiles, refer to the Bluetooth device's user manual.
- Remove the pairing information for the Bluetooth device then pair the product with this device again.
- Place the headphones in the charging case and close the cover, then remove the headphones and perform the operation again.
- Make sure you are not connected to any other previously connected Bluetooth device. If so, disconnect the product using the previously connected Bluetooth device, and then select the product on the Bluetooth device being connected to. Use forced pairing mode if you are unable to disconnect from a previously connected Bluetooth device. For details, refer to "If the product does not connect to a device (forced pairing mode)" (p. 32).
- Reset the product if it cannot be unpaired, connected, or does not operate as expected even after trying all other solutions. For details, refer to "If the product operates abnormally (reset)" (p. 32).

Re-pairing takes a long time

- Pairing a device again can take a long time. Please be patient as the process is completed.
- Make sure you are not connected to any other previously connected Bluetooth device. If so, disconnect the product using the previously connected Bluetooth device, and then select the product on the Bluetooth device being connected to. Use forced pairing mode if you are unable to disconnect from a previously connected Bluetooth device. For details, refer to "If the product does not connect to a device (forced pairing mode)" (p. 32).

No sound is heard / Sound is faint

- Turn on the power of the product and the Bluetooth device.
- Turn up the volume on the product and the Bluetooth device.
- Make sure that the product and Bluetooth device are connected by the A2DP (or audio connection).
- Disable pairing for the product and the Bluetooth device, then pair the product with this device again.
- Move away from obstacles between the product and the Bluetooth device, such as people, metal, or walls, and place the product and device closer together.
- Switch the sound output of the Bluetooth device to the product.

Sound only comes out of one headphone

- Make sure there is battery level remaining.
- Place the headphones in the charging case and close the cover, then remove the headphones and perform the operation again.

Sound is distorted / Noise is heard / Sound cuts out

- Turn down the volume on the product and the Bluetooth device.
- Keep the product away from devices that emit radio waves such as microwaves and wireless routers.
- Keep the product away from TVs, radios, and devices with built-in tuners. These devices can also be affected by the product.
- Turn off the equalizer settings of the Bluetooth device.
- Remove obstacles between the product and the Bluetooth device and place them closer together. For details, refer to "For a more comfortable Bluetooth communication experience" (p. 6).

Cannot hear the voice of the caller / Voice of the caller is too quiet

- Turn on the power of the product and the Bluetooth device.
- Turn up the volume on the product and the Bluetooth device.
- Confirm that the product and Bluetooth device are connected via HFP (or phone connection).
- Disable pairing for the product and the Bluetooth device, then pair the product with this device again.
- Switch the sound output of the Bluetooth device to the product.

Charging case cannot be charged

- Securely connect the included USB charging cable and charge the product.
- The charging case or headphones may be hot. Allow the temperature of the product to cool sufficiently before charging in a well-ventilated place (10 to 35°C (50 to 95°F)) away from direct sunlight.

Headphones cannot be charged

- Make sure that the product is placed in the charging case correctly.
- Make sure to close the charging case cover when charging.

- Charge the charging case.
- Wipe dirt off the charging terminal with a dry cloth.
- The charging case or headphones may be hot. Allow the temperature of the product to cool sufficiently before charging in a well-ventilated place (10 to 35°C (50 to 95°F)) away from direct sunlight.

Bass is insufficient

- Select the eartips that best fit your ears, and wear the product securely. It may be difficult to hear bass sounds if the eartips do not fit snugly in your ears.
- Switch the equalizer function setting to change the sound quality. Touch and hold (about 2 seconds) the touch sensor on the L (left) side headphone to turn the equalizer function on or off.
- Use the "CONNECT" app to change the equalizer function setting applied with the touch sensor. Change the setting so that the desired sound quality is applied.

- For details about how to operate your Bluetooth device, refer to the device's user manual.

Specifications

Headphones

Type	Dynamic
Driver	9 mm
Sensitivity	110 dB/mW
Frequency response	5 to 20,000 Hz
Impedance	20 ohms

Microphone

Type	MEMS type
Polar pattern	Omnidirectional
Sensitivity	-38 dB (1 V/Pa, at 1 kHz)
Frequency response	100 to 8,000 Hz

Communication specifications

Communication system	Bluetooth version 5.1
Maximum RF output	10 mW EIRP
Maximum communication range	Line of sight - approx. 10 m (33')
Frequency band	2.402 GHz to 2.480 GHz
Modulation method	GFSK, Pi/4DQPSK, 8DPSK
Spread spectrum method	FHSS
Compatible Bluetooth profiles	A2DP, AVRCP, HFP
Supported codec	AAC, SBC
Supported content protection method	SCMS-T
Transmission band	20 to 20,000 Hz

Other

Power supply	Headphones: DC 3.7 V lithium ion battery Charging case: DC 3.7 V lithium ion battery
Charging time	Headphones: Approx. 2.5 hours[1] Charging case: Approx. 3 hours[1]
Operating time	Continuous transmission time (music playback): Max. approx. 7.5 hours[1] (headphones) Max. approx. 20 hours[1] (if charging case is used in combination)
Weight	Headphones: Approx. 4.5 g (0.16 oz) (L side), approx. 4.5 g (0.16 oz) (R side) Charging case: Approx. 28 g (0.99 oz)
Waterproof and dustproof performance	IP55[2]
Operating temperature	5°C to 40°C (41°F to 104°F)
Accessories	USB charging cable (30 cm (12"), USB Type-A / USB Type-C), Eartips (XS, S, M, L)
Sold separately	Eartips

[1] The figures above depend on operating conditions.

[2] Headphones only.

- For product improvement, the product is subject to modification without notice.

FCC ID : JFZCKS30TWPL, JFZCKS30TWPR
IC : 1752B-CKS30TWPL, 1752B-CKS30TWPR

FCC Part 15.19
This device complies with part 15 of the FCC Rules. Operation is subject to the following two conditions: (1) This device may not cause harmful interference, and (2) this device must accept any interference received, including interference that may cause undesired operation.

FCC Part 15.21
Any changes or modifications (including the antennas) to this device that are not expressly approved by the manufacturer may void the user's authority to operate the equipment.

[EN]This device contains licence-exempt transmitter(s)/receiver(s) that comply with Innovation, Science and Economic Development Canada’s licence-exempt RSS(s). Operation is subject to the following two conditions:
(1) This device may not cause interference.
(2) This device must accept any interference, including interference that may cause undesired operation of the device.
[FR]L’émetteur/récepteur exempt de licence contenu dans le présent appareil est conforme aux CNR d’Innovation, Sciences et Développement économique Canada applicables aux appareils radio exempts de licence. L’exploitation est autorisée aux deux conditions suivantes :
(1) L’appareil ne doit pas produire de brouillage;
(2) L’appareil doit accepter tout brouillage radioélectrique subi, même si le brouillage est susceptible d’en compromettre le fonctionnement.

[EN] FCC and IC RF Radiation Exposure Statement: This equipment complies with FCC and IC RF Radiation exposure limits set forth for an uncontrolled environment. This device and its antenna must not be co-located or operating in conjunction with any other antenna or transmitter. This equipment should be installed and operated with a minimum distance of 20cm between the radiator and your body
[FR]RF du FCC et IC d'exposition aux radiations: Cet équipement est conforme à l'exposition de FCC et IC rayonnements RF limites é-tablies pour un environnement non contrôlé. L’antenne pour ce transmetteur ne doit pas être même endroit avec d’autres émetteur sauf conformément à FCC et IC procédures de produits Multi-émetteur.
Cet équipement doit être installé et utilisé avec une distance minimale de 20cm entre le radiateur et votre corps.

Trademarks

- The **Bluetooth**® word mark and logos are registered trademarks owned by Bluetooth SIG, Inc., and any use of such marks by Audio-Technica Corporation is under license. Other trademarks and trade names are those of their respective owners.
- USB Type-C™ is a trademark of USB Implementers Forum.
- Google Play is a trademark of Google LLC.

株式会社オーディオテクニカ
〒194-8666 東京都町田市西成瀬2-46-1
www.audio-technica.co.jp

Audio-Technica Corporation
2-46-1 Nishi-naruse, Machida, Tokyo 194-8666, Japan
www.audio-technica.com
©2024 Audio-Technica Corporation
Global Support Contact: www.at-globalsupport.com

XXXXXXXXX-02-01 ver.1 2024.03.01