INDUSTRY CANADA RSS-247
TEST REPORT

For

AUTOMATIC WIRELESS TURNTABLE

Model: AT-LP70XBT

Brand Name: audio-technica

Issued for

Audio-Technica Corporation
2-46-1 Nishi-naruse, Machida, Tokyo 194-8666, JAPAN

Issued by

Compliance Certification Services Inc.
Tainan Lab.
No. 168, Ln. 523, Sec. 3, Zhongzheng Rd.,
Rende Dist., Tainan City, 717017, Taiwan
Issued Date: March 07, 2024

Note: *This report shall not be reproduced except in full, without the written approval of Compliance Certification Services Inc. This document may be altered or revised by Compliance Certification Services Inc. personnel only, and shall be noted in the revision section of the document. The client should not use it to claim product endorsement by TAF or any government agencies. The test results of this report relate only to the tested sample identified in this report.*

Unless otherwise stated the results shown in this test report refer only to the sample(s) tested and such sample(s) are retained for 90 days only.
除非另有說明，此報告結果僅對測試之樣品負責，同時此樣品僅保留90天。本報告未經本公司書面許可，不可部份複製。
This document is issued by the Company subject to its General Conditions of Service printed overleaf, available on request or accessible at http://www.sgs.com.tw/Terms-and-Conditions and, for electronic format documents, subject to Terms and Conditions for Electronic Documents at http://www.sgs.com.tw/Terms-and-Conditions. Attention is drawn to the limitation of liability, indemnification and jurisdiction issues defined therein. Any holder of this document is advised that information contained hereon reflects the Company's findings at the time of its intervention only and within the limits of client's instruction, if any. The Company's sole responsibility is to its Client and this document does not exonerate parties to a transaction from exercising all their rights and obligations under the transaction documents. This document cannot be reproduced, except in full, without prior written approval of the Company. Any unauthorized alteration, forgery or falsification of the content or appearance of this document is unlawful and offenders may be prosecuted to the fullest extent of the law.

Revision History

Rev.	Issue Date	Revisions	Effect Page	Revised By
00	February 19, 2024	Initial Issue	All Page	Gina Lin
01	March 07, 2024	See the following note rev.01	All Page	Gina Lin

Note:

※ Rev.00 Issue Date: February 19, 2024
Original report.

※ Rev.01 Issue Date: March 07, 2024
Update applicable standard.

This document cannot be reproduced except in full, without prior written approval of the Company. 本報告未經本公司書面許可，不可部份複製。

TABLE OF CONTENTS

TITLE PAGE NO.

1. TEST REPORT CERTIFICATION 4

2. TEST RESULT SUMMARY 5

3. EUT DESCRIPTION 6

3.1 DESCRIPTION OF EUT & POWER 6

4. DESCRIPTION OF TEST MODES 7

5. TEST METHODOLOGY 8

6. FACILITIES AND ACCREDITATION 9

6.1 FACILITIES 9
6.2 ACCREDITATIONS 9
6.3 MEASUREMENT UNCERTAINTY 10
6.4 MEASUREMENT EQUIPMENT USED 11

7. SETUP OF EQUIPMENT UNDER TEST 12

7.1 SETUP CONFIGURATION OF EUT 12
7.2 SUPPORT EQUIPMENT 13

8. IC RSS-247 REQUIREMENTS 16

8.1 20DB BANDWIDTH FOR HOPPING 16
8.2 99% BANDWIDTH 22
8.3 MAXIMUM PEAK OUTPUT POWER 28
8.4 HOPPING CHANNEL SEPARATION 40
8.5 NUMBER OF HOPPING FREQUENCY USED 45
8.6 DWELL TIME ON EACH CHANNEL 48
8.7 DUTY CYCLE 62
8.8 CONDUCTED SPURIOUS EMISSION 67
8.9 RADIATED EMISSION 76
8.10 CONDUCTED EMISSION 99

APPENDIX I PHOTOGRPHS OF TEST SETUP 104

APPENDIX II PHOTOGRPHS OF EUT 109

This document cannot be reproduced except in full, without prior written approval of the Company. 本報告未經本公司書面許可，不可部份複製。

1. TEST REPORT CERTIFICATION

Applicant	:	**Audio-Technica Corporation** 2-46-1 Nishi-naruse, Machida, Tokyo 194-8666, JAPAN
Manufacturer	:	**Audio-Technica Corporation** 2-46-1 Nishi-naruse, Machida, Tokyo 194-8666, JAPAN
Equipment Under Test	:	AUTOMATIC WIRELESS TURNTABLE
Model Number	:	AT-LP70XBT
Data Applies To	:	N/A
Brand Name	:	audio-technica
Date of Test	:	December 27, 2023 ~ January 10, 2024

APPLICABLE STANDARD	
Standard	**Test Result**
IC RSS-247 Issue 3: 2023	PASS

Statements of Conformity
Determining compliance shall be based on the results of the compliance measurement, not taking into account measurement instrumentation uncertainty.

WE HEREBY CERTIFY THAT: The above equipment has been tested by Compliance Certification Services Inc., and found compliance with the requirements set forth in the technical standards mentioned above. The results of testing in this report apply only to the product/system, which was tested. Other similar equipment will not necessarily produce the same results due to production tolerance and measurement uncertainties.

Approved by:

John Chen

John Chen
Supervisor

This document cannot be reproduced except in full, without prior written approval of the Company. 本報告未經本公司書面許可，不可部份複製。

2. TEST RESULT SUMMARY

IC Standard Section	Report Section	Test Item	Result
-	3	ANTENNA REQUIREMENT	Pass
RSS-247(5.1)(A)	8.1	20dB BANDWIDTH	Pass
RSS-GEN 6.7	8.2	99% BANDWIDTH	Pass
RSS-247(5.4)(B)	8.3	MAXIMUM PEAK OUTPUT POWER	Pass
RSS-247(5.1)(B)	8.4	HOPPING CHANNEL SEPARATION	Pass
RSS-247(5.4)(B)	8.5	NUMBER OF HOPPING FREQUENCY USED	Pass
RSS-247(5.1)(D)	8.6	DWELL TIME	Pass
-	8.7	DUTY CYCLE	-
RSS-247(5.5)	8.8	CONDUCTED SPURIOUS EMISSION	Pass
RSS-GEN 8.10	8.9	RADIATED EMISSIONS	Pass
RSS-GEN 8.9	8.10	CONDUCTED EMISSION	Pass

This document cannot be reproduced except in full, without prior written approval of the Company. 本報告未經本公司書面許可，不可部份複製。

3. EUT DESCRIPTION

3.1 DESCRIPTION OF EUT & POWER

Product Name	AUTOMATIC WIRELESS TURNTABLE
Model Number	AT-LP70XBT
Model Different	N/A
Brand Name	audio-technica
Received Date	December 25, 2023
Reported Date	January 24, 2024
Operating Frequency	2402MHz ~ 2480MHz
Transmit Peak Power	GFSK : 1.122dBm / 1.29mW 8DPSK: 1.002dBm / 1.26mW
Channel Spacing	1MHz
Transmit Data Rate	GFSK Mode：1 Mbps 4/πDQPSK Mode : 2Mbps 8DPSK Mode : 3Mbps
Modulation Technique	GFSK、π/4DQPSK、8DPSK
Number of Channels	79 Channels
Power Supply	AC 100-240V
Antenna Type	Manufacturer: Sunitec Type: Layout Antenna Model: AT-LP70XBT Gain: 3.33 dBi
Firmware Version	V1.0
Software Version	V1.0

Power Adapter :

Manufacturer	Model No.	Power Input	Power Output
SHENZHEN FUJIA APPLIANCE CO.,LTD	FJ-SW1261200500DN	100-240V~ 50/60Hz 0.4A Max	12Vdc 0.5A 6.0W

Remark:

1. The sample selected for test was engineering sample that approximated to production product and was provided by manufacturer.
2. For more details, please refer to the User's manual of the EUT.

This document cannot be reproduced except in full, without prior written approval of the Company. 本報告未經本公司書面許可，不可部份複製。

4. DESCRIPTION OF TEST MODES

The EUT (ST) had been tested under operating condition.

There are three channels have been tested as following :

Channel	*Frequency (MHz)*
Low	2402
Middle	2441
High	2480

Radiated Emission Test (Below 1 GHz):

☒ Pre-Scan has been conducted to determine the worst-case mode from all possible combinations between available modulations, data rates and antenna ports (if EUT with antenna diversity architecture).

☒ Following channel(s) was (were) selected for the final test as listed below.

Normal Linking

Radiated Emission Test (Above 1 GHz):

☒ Pre-Scan has been conducted to determine the worst-case mode from all possible combinations between available modulations, data rates and antenna ports (if EUT with antenna diversity architecture).

☒ Following channel(s) was (were) selected for the final test as listed below.

Tested Channel	Modulation Technology	Modulation Type	Packet Type
Low, Mid, High	FHSS	GFSK	DH5
Low, Mid, High	FHSS	8-DPSK	3-DH5

Bandedge Measurement :

☒ Pre-Scan has been conducted to determine the worst-case mode from all possible combinations between available modulations, data rates and antenna ports (if EUT with antenna diversity architecture).

☒ Following channel(s) was (were) selected for the final test as listed below.

Tested Channel	Modulation Technology	Modulation Type	Packet Type
Low, Mid, High	FHSS	GFSK	DH5
Low, Mid, High	FHSS	8-DPSK	3-DH5

This document cannot be reproduced except in full, without prior written approval of the Company. 本報告未經本公司書面許可，不可部份複製。

Antenna Port Conducted Measurement :

☒ Pre-Scan has been conducted to determine the worst-case mode from all possible combinations between available modulations, data rates and antenna ports (if EUT with antenna diversity architecture).

☒ Following channel(s) was (were) selected for the final test as listed below.

Tested Channel	Modulation Technology	Modulation Type	Packet Type
Low, Mid, High	FHSS	GFSK	DH5
Low, Mid, High	FHSS	8-DPSK	3-DH5

5. TEST METHODOLOGY

The tests documented in this report were performed in accordance with IC RSS-247 Issue 3 (August 2023), IC RSS-Gen Issue 5 (March 2019), ANSI C63.10: 2013.
This submittal(s) (test report) is intended for IC Certification No: **1752B-LP70XBT** filing to comply with Industry CANADA RSS247.

This document cannot be reproduced except in full, without prior written approval of the Company. 本報告未經本公司書面許可，不可部份複製。

6. FACILITIES AND ACCREDITATION

6.1 FACILITIES

All measurement facilities used to collect the measurement data are located at

☐ No.8, Jiucengling, Xinhua Dist., Tainan City 712, Taiwan (R.O.C.)

☒ No. 168, Ln. 523, Sec. 3, Zhongzheng Rd., Rende Dist., Tainan City 717, Taiwan

CAB Identifier: TW1109

The sites are constructed in conformance with the requirements of ANSI C63.10:2013 and CISPR 22. All receiving equipment conforms to CISPR 16-1-1, CISPR 16-1-2, CISPR 16-1-3, CISPR 16-1-4, CISPR 16-1-5.

6.2 ACCREDITATIONS

Our laboratories are accredited and approved by the following approval agencies according to ISO/IEC 17025.

Taiwan	TAF

The measuring facility of laboratories has been authorized or registered by the following approval agencies.

Canada	Industry Canada (ISED#: 2324H)
Germany	TUV NORD
Taiwan	BSMI
USA	FCC

This document cannot be reproduced except in full, without prior written approval of the Company. 本報告未經本公司書面許可，不可部份複製。

6.3 MEASUREMENT UNCERTAINTY

The following table is for the measurement uncertainty, which is calculated as per the document CISPR 16-4-2.

PARAMETER	UNCERTAINTY
Radiated Emission, 9kHz~30MHz Test Site : CB1166	±2.7dB
Radiated Emission, 30 MHz ~1GHz Test Site : CB1166	±3.76dB
Radiated Emission, 1GHz ~18GHz Test Site : CB1166	±4.43dB
Radiated Emission, 18GH~26.5GHz Test Site : CB1166	±4.79dB
Radiated Emission, 26.5GH~40GHz Test Site : CB1166	±4.72dB
Power Line Conducted Emission, 9kHz~30MHz	±1.83dB
Band Width	0.025%
Peak Output Power MU	±1.9dB
Band Edge MU	±0.264dBuV
Channel Separation MU	±361.69Hz
Duty Cycle MU	±0.2%
Frequency Stability MU	±0.493Hz
Temperature	±0.5
Humidity	±3%

This measurement uncertainty is confidence of approximately 95%, k=2

This document cannot be reproduced except in full, without prior written approval of the Company. 本報告未經本公司書面許可，不可部份複製。

6.4 MEASUREMENT EQUIPMENT USED

For §8.9

Chamber 1166 Room (Radiation Test)					
Name of Equipment	**Manufacturer**	**Model**	**Serial Number**	**Calibration Date**	**Calibration Due**
Active Loop Antenna	ETS-LINDREN	6502	8905-2356	09/04/2023	09/03/2024
Attenuator	MCL	BW-S15W5	0535	01/19/2023	01/18/2024
Bilog Antenna with 6dB Attenuator	SUNOL SCIENCES & EMCI	JB1 & N-6-06	A021306 & AT-N0682	10/03/2023	10/02/2024
Cable	EMCI	EM102-KMKM	CB1166-01	06/17/2023	06/16/2024
Double Ridged Guide Horn Antenna	ETS-LINDGREN	3116	00078900	03/25/2023	03/24/2024
EMI Test Receiver	R&S	ESCI	101203	10/16/2023	10/15/2024
EXA Spectrum Analyzer	KEYSIGHT	N9010A	MY54430216	07/25/2023	07/24/2024
Double Ridged Guide Horn Antenna	SCHWARZBECK	BBHA 9120D	9120D-788(98006)	04/18/2023	04/17/2024
Notch Filter	MICRO-TRONICS	BRM50702-01	018	01/19/2023	01/18/2024
Pre-Amplifier	EMCI	EMC012645	980098	01/19/2023	01/18/2024
Pre-Amplifier	Com-Power	PAM-840A	461378	06/07/2023	06/06/2024
Software	Excel(ccs-o6-2020 v1.1)，e3(v6.101222)				

For §8.1~8.8

Chamber 1166 Room (Conducted Test)					
Name of Equipment	**Manufacturer**	**Model**	**Serial Number**	**Calibration Date**	**Calibration Due**
EXA Spectrum Analyzer	KEYSIGHT	N9010A	MY54430216	07/25/2023	07/24/2024
SMA Cable+10dB Attenuator	CCS	SMA+10dB ATT	SMA/10dB	01/19/2023	01/18/2024
Software	Excel(ccs-o6-2020 v1.1)				

For §8.10

Conducted Emission room #1					
Name of Equipment	**Manufacturer**	**Model**	**Serial Number**	**Calibration Date**	**Calibration Due**
BNC Coaxial Cable	CCS	BNC50	11	01/19/2023	01/18/2024
EMI Test Receiver	R&S	ESCS 30	100348	12/05/2023	12/04/2024
LISN	R&S	ENV216	101495	07/12/2023	07/11/2024
LISN	SCHWARZBECK	NNLK8130	8130124	01/18/2023	01/17/2024
Pulse Limiter	SCHWARZBECK	VTSD 9561-F	797	01/19/2023	01/18/2024
Test S/W	e3(v6.101222)				

This document cannot be reproduced except in full, without prior written approval of the Company. 本報告未經本公司書面許可，不可部份複製。

7. SETUP OF EQUIPMENT UNDER TEST

7.1 SETUP CONFIGURATION OF EUT

EMI

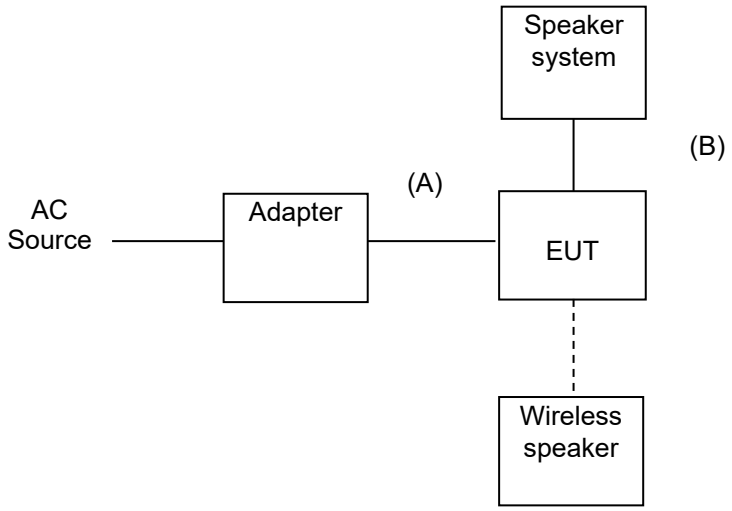

RF

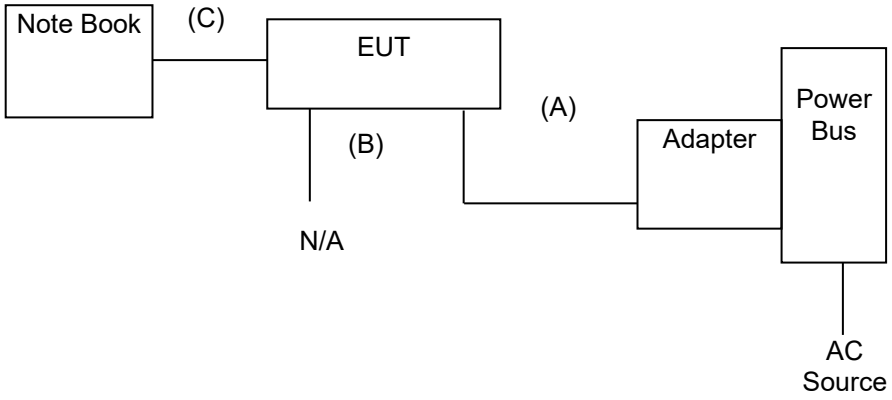

This document cannot be reproduced except in full, without prior written approval of the Company. 本報告未經本公司書面許可，不可部份複製。

7.2 SUPPORT EQUIPMENT

For EMI test

No.	Product	Manufacturer	Model No.	Certify No.	Signal cable
1	Speaker System	infotec	SP-102	DOC	N/A
2	Wireless Speaker	PHILIPS	TAS1505	DOC	N/A

No.	Signal cable description	
A	DC Power Cable	Unshielded, 1.5m 1 pcs. with 1 core.
B	Audio Cable	Shielded, 1.0m 1 pcs.

For RF test

No.	Product	Manufacturer	Model No.	Certify No.	Power cable
1	Note Book	Acer	Z5WE1	N/A	Unshielded, 1.8m with 1 core.

No.	Signal cable description	
A	DC Power	Unshielded, 1.5m 1 pcs. with 1 core.
B	Audio	Shielded, 1.0m 1 pcs.
C	Micro USB	Shielded, 2.0m 1 pcs. with 1 core.

Note:

1) All the equipment/cables were placed in the worst-case configuration to maximize the emission during the test.
2) Grounding was established in accordance with the manufacturer's requirements and conditions for the intended use.
3) shd. = shielded; unshd. = unshielded

This document cannot be reproduced except in full, without prior written approval of the Company. 本報告未經本公司書面許可，不可部份複製。

EUT OPERATING CONDITION

1. Set up all computers like the setup diagram.
2. The “Blue Test 3 V3.3.9.1137” software was used for testing
3.Choose Transport “DEBUG” and Device “USB DBG(100)”

BT1.0、3.0

TX Mode:

PACKET TX
Channel 1~5: 0,39,78
GFSK(DH1):
Packet Type:DH1 > Packet Length 27
Power(0-9) : 6
GFSK(DH3):
Packet Type:DH3 > Packet Length 183
Power(0-9) : 6
GFSK(DH5):
Packet Type:DH5 > Packet Length 339
Power(0-9) : 6
8-DPSK(3DH1):
Packet Type:3DH1 > Packet Length 83
Power(0-9) : 6
8-DPSK(3DH3):
Packet Type:3DH3 > Packet Length 552
Power(0-9) : 6
8-DPSK(3DH5):
Packet Type:3DH5 > Packet Length 1021
Power(0-9) : 6

RX Mode:

PACKET RX

This document cannot be reproduced except in full, without prior written approval of the Company. 本報告未經本公司書面許可，不可部份複製。

BT4.0、5.0

TX Mode:

BLE TEST TX
Channel > 0,20,39 (0-39)
Length > 37
Bit pattern > Pseudo-rdm 9
PHY > 1M (2M)

RX Mode:

BLE TEST RX
Channel > 0 (0-39)
PHY > 1M (2M)

4. All of the function are under run.
5. Start test.

This document cannot be reproduced except in full, without prior written approval of the Company. 本報告未經本公司書面許可，不可部份複製。

8. IC RSS-247 REQUIREMENTS

8.1 20dB BANDWIDTH FOR HOPPING

LIMITS

Limit : N/A

TEST SETUP

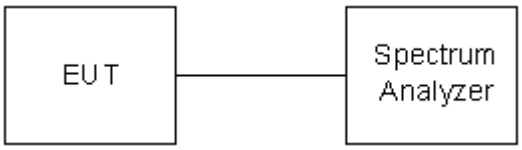

TEST PROCEDURE

The 20dB bandwidth was measured with a spectrum analyzer connected to RF antenna connector (conducted measurement) while EUT was operating in transmit mode at the appropriate center frequency. The analyzer center frequency was set to the EUT carrier frequency, using the analyzer N dB Points function, the 20dB bandwidth of the emission was determined.

This document cannot be reproduced except in full, without prior written approval of the Company. 本報告未經本公司書面許可，不可部份複製。

TEST RESULTS

Model Name	AT-LP70XBT	Test By	Peter Chu
Temp & Humidity	22.5°C, 45%	Test Date	2023/12/27

Modulation Type: GFSK / DH5

Channel	Channel Frequency (MHz)	20dB Bandwidth (kHz)	Two-third of 20dB Bandwidth (MHz)
Low	2402	1121.00	0.75
Middle	2441	1120.00	0.75
High	2480	1119.00	0.75

Modulation Type: 8-DPSK / 3-DH5

Channel	Channel Frequency (MHz)	20dB Bandwidth (kHz)	Two-third of 20dB Bandwidth (MHz)
Low	2402	1399.00	0.93
Middle	2441	1396.00	0.93
High	2480	1396.00	0.93

This document cannot be reproduced except in full, without prior written approval of the Company. 本報告未經本公司書面許可，不可部份複製。

20dB BANDWIDTH

CH Low / GFSK

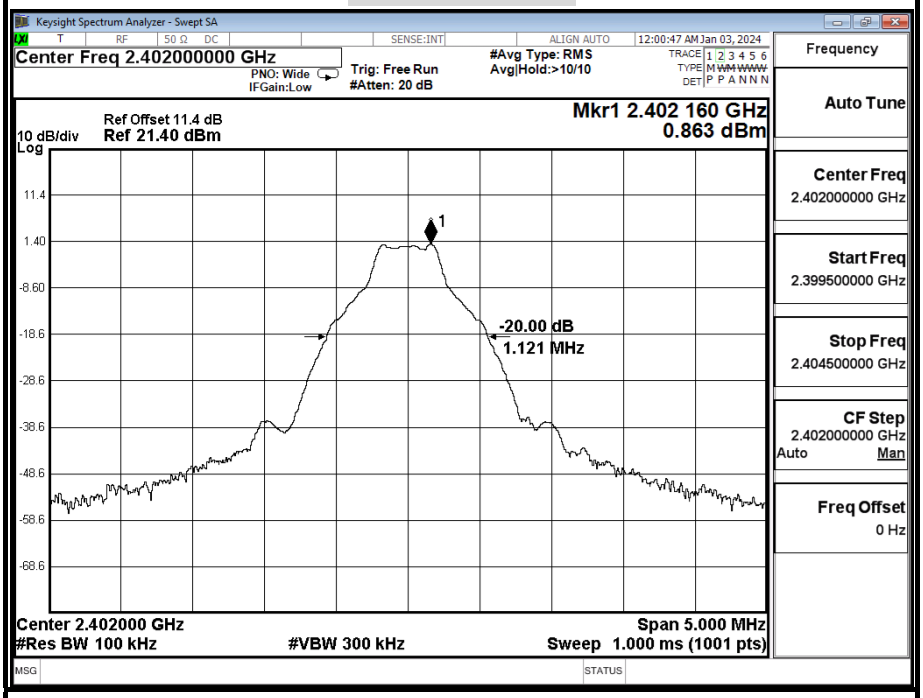

CH Middle / GFSK

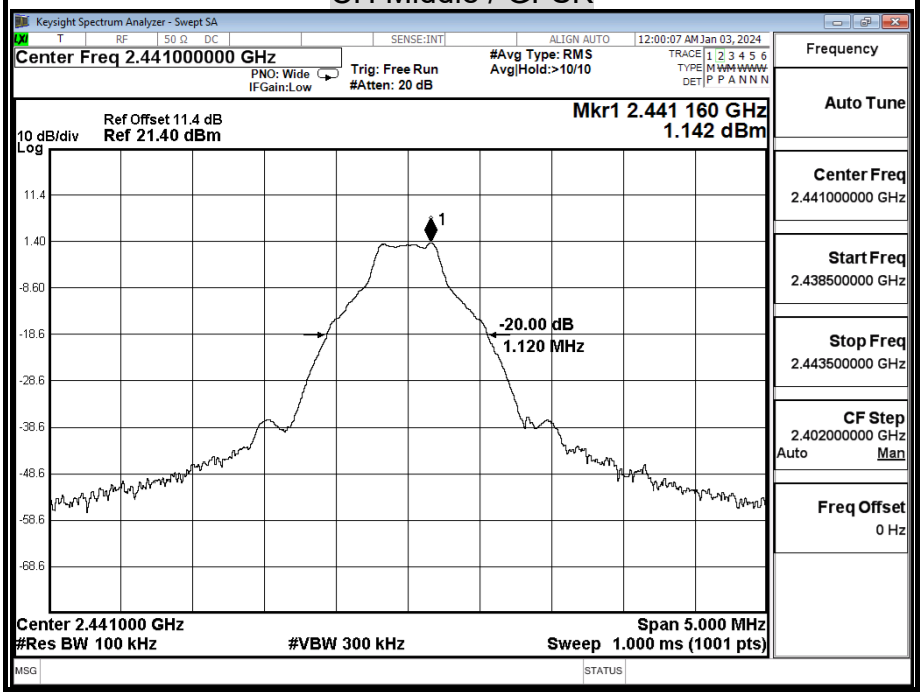

This document cannot be reproduced except in full, without prior written approval of the Company. 本報告未經本公司書面許可，不可部份複製。

CH High / GFSK

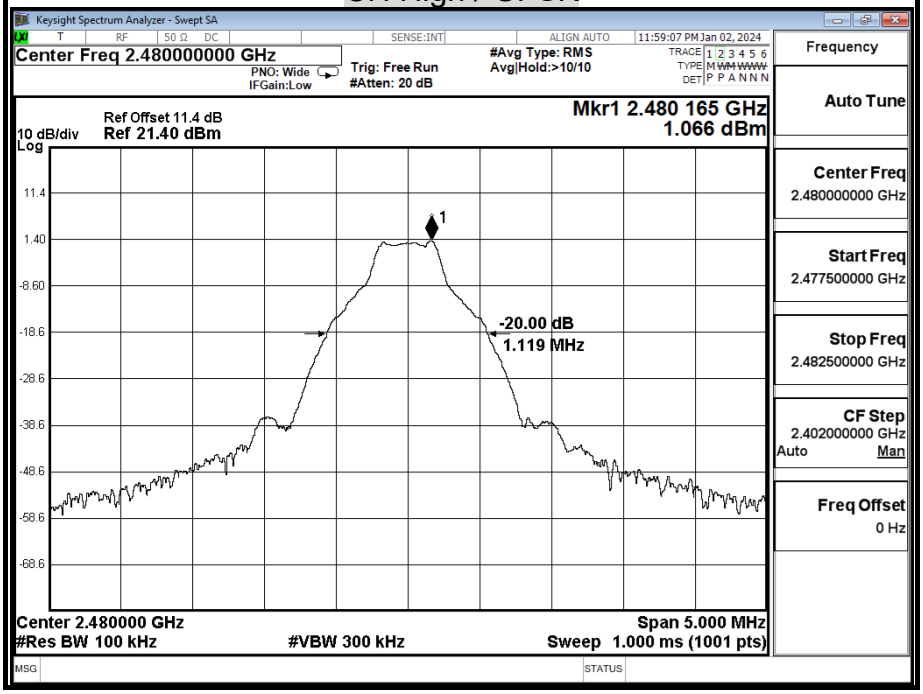

This document cannot be reproduced except in full, without prior written approval of the Company. 本報告未經本公司書面許可，不可部份複製。

CH Low / 8-DPSK

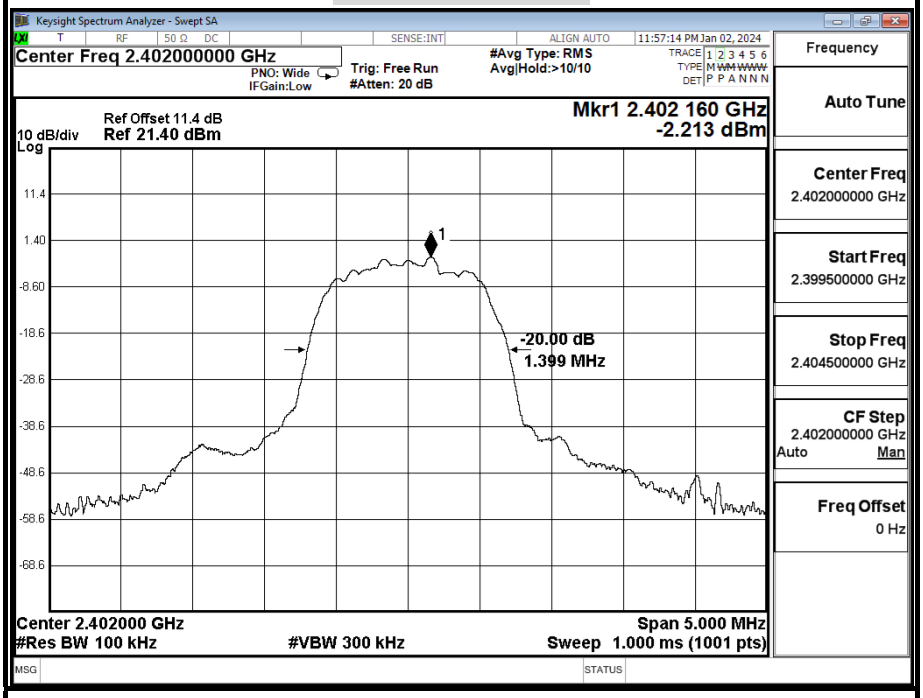

CH Middle / 8-DPSK

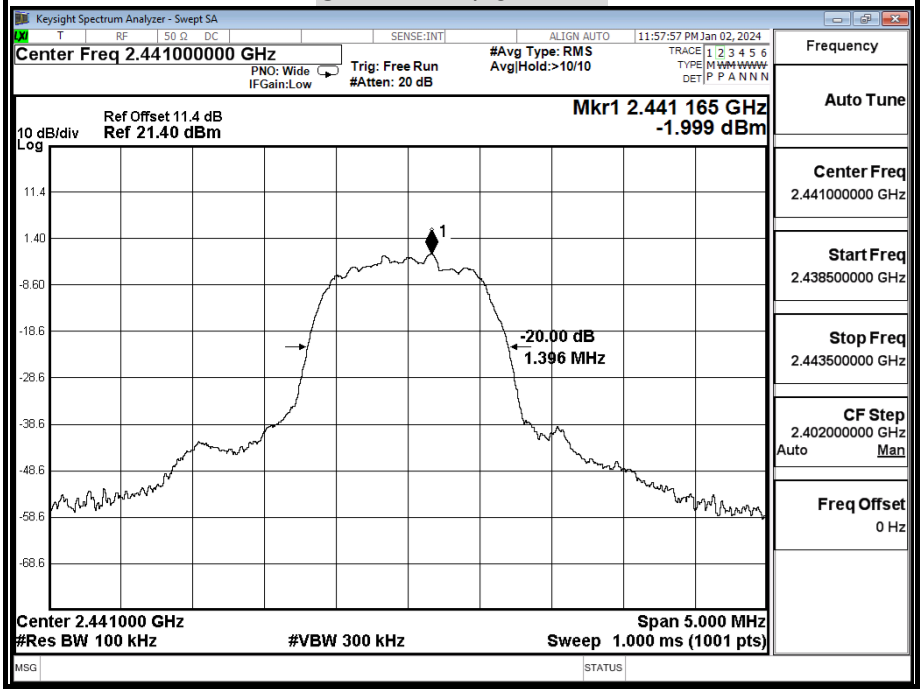

This document cannot be reproduced except in full, without prior written approval of the Company. 本報告未經本公司書面許可，不可部份複製。

CH High / 8-DPSK

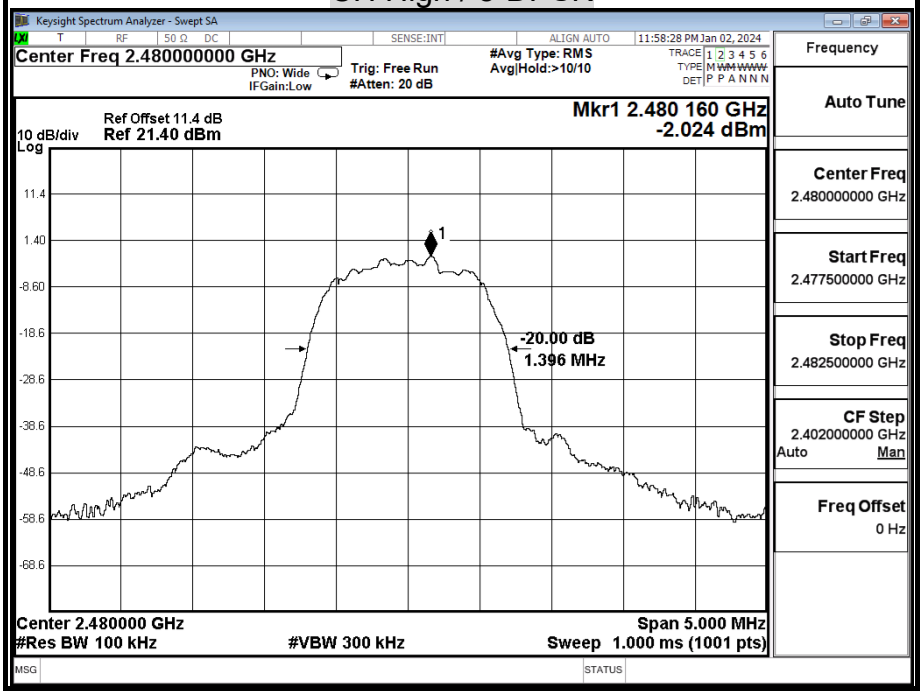

This document cannot be reproduced except in full, without prior written approval of the Company. 本報告未經本公司書面許可，不可部份複製。

8.2 99% BANDWIDTH

LIMITS

None; for reporting purposes only.

TEST SETUP

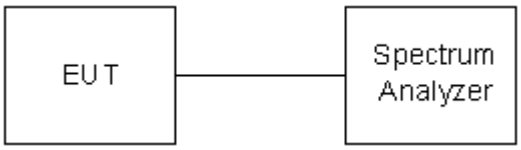

TEST PROCEDURE

1. The spectrum shall be set as follows :
   Span : The minimum span to fully display the emission and approximately 20dB below peak level.
   RBW : The set to 1% to 3% of the selected span.
   VBW: The video bandwidth shall be set to 3 times the resolution bandwidth.
   Where practical, a sampling detector shall be used since a peak or, peak hold, may produce a wider bandwidth than actual.
2. Compute the combined power of all signal responses contained in the trace by covering all the data points.
3. For 99% occupied BW, place the markers at the frequency at which 0.5% of the power lies to the right of the right marker and 0.5% of the power lies to the left of the left marker.
4. The 99% BW is the bandwidth between the right and left markers.

This document cannot be reproduced except in full, without prior written approval of the Company. 本報告未經本公司書面許可，不可部份複製。

TEST RESULTS

Model Name	AT-LP70XBT	Test By	Peter Chu
Temp & Humidity	22.5°C, 45%	Test Date	2023/12/27

Modulation Type: GFSK / DH5

Channel	Channel Frequency (MHz)	99% Occupied Power Bandwidth (kHz)
Low	2402	874.81
Middle	2441	874.76
High	2480	871.20

Modulation Type: 8-DPSK / 3DH5

Channel	Channel Frequency (MHz)	99% Occupied Power Bandwidth (kHz)
Low	2402	1187.80
Middle	2441	1186.10
High	2480	1188.10

This document cannot be reproduced except in full, without prior written approval of the Company. 本報告未經本公司書面許可，不可部份複製。

99% BANDWIDTH

CH Low (GFSK)

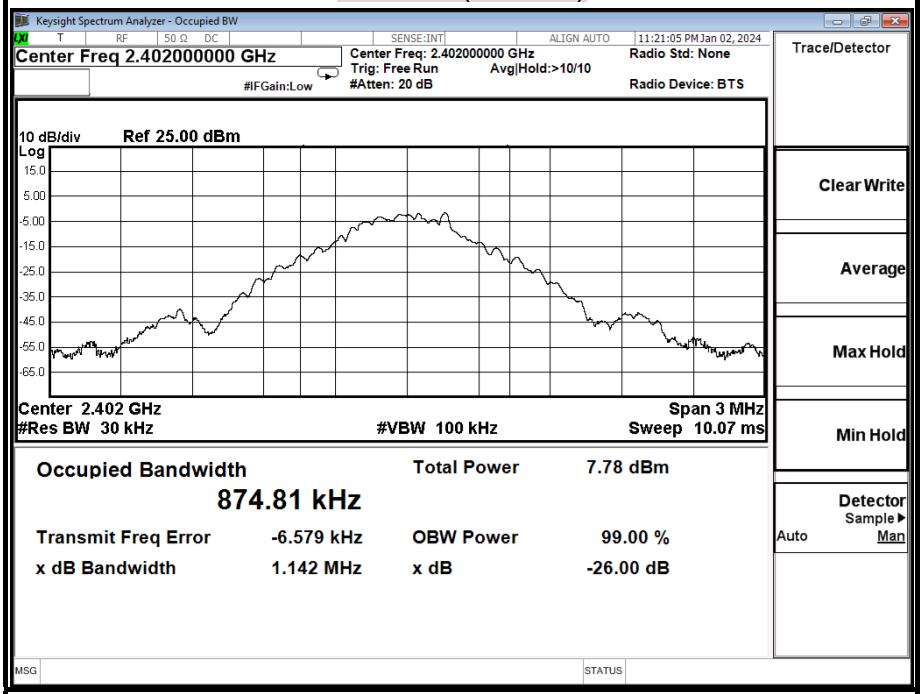

CH Middle (GFSK)

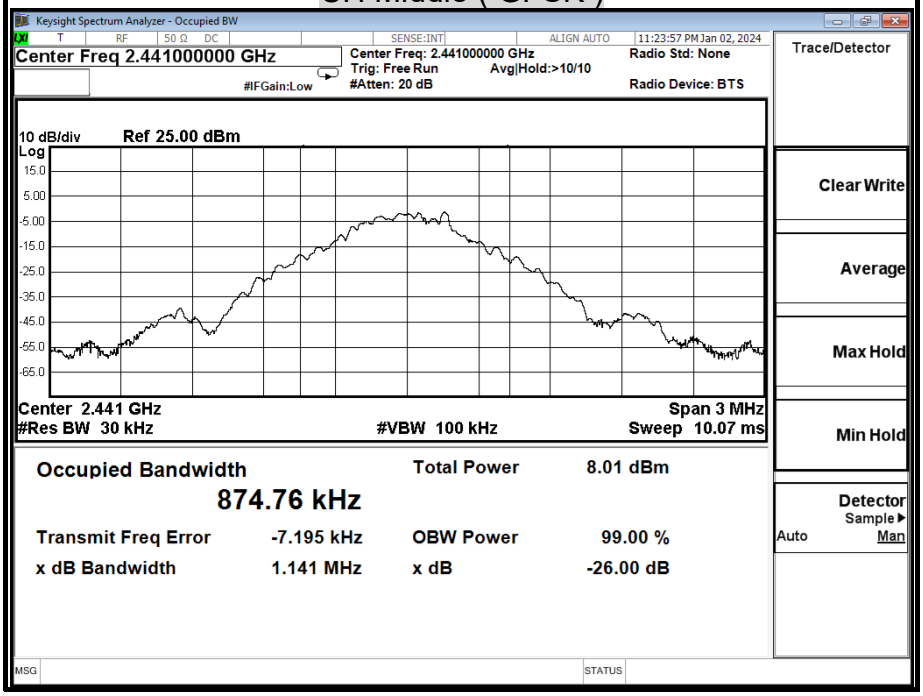

This document cannot be reproduced except in full, without prior written approval of the Company. 本報告未經本公司書面許可，不可部份複製。

CH High (GFSK)

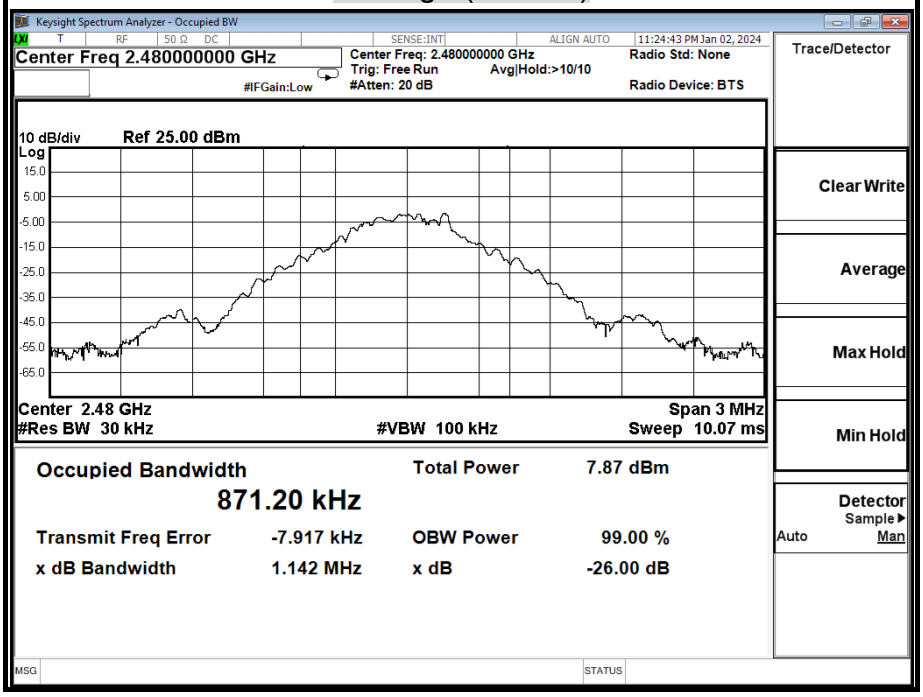

This document cannot be reproduced except in full, without prior written approval of the Company. 本報告未經本公司書面許可，不可部份複製。

CH Low (8-DPSK)

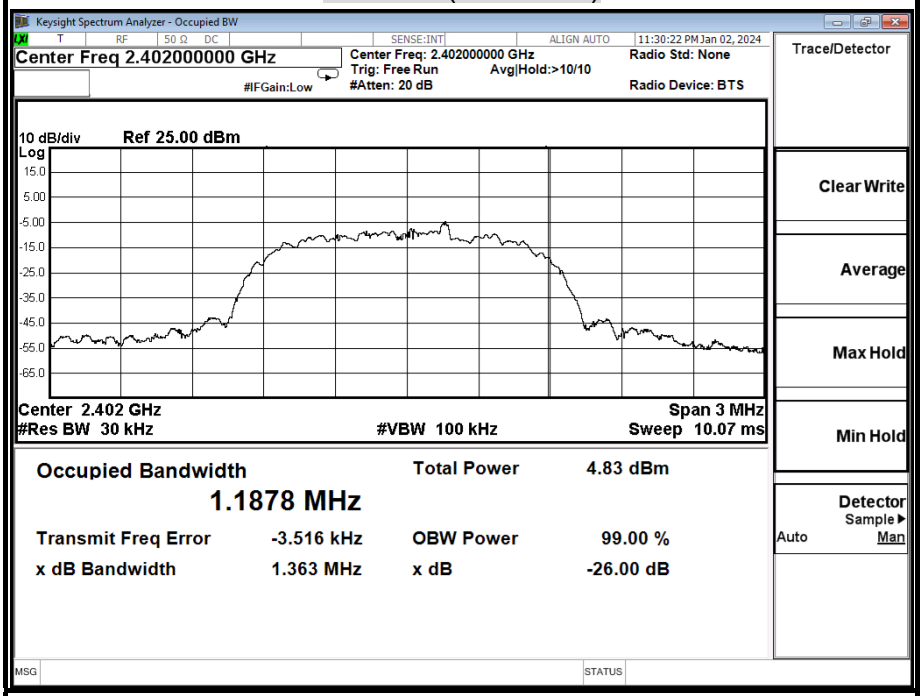

CH Middle (8-DPSK)

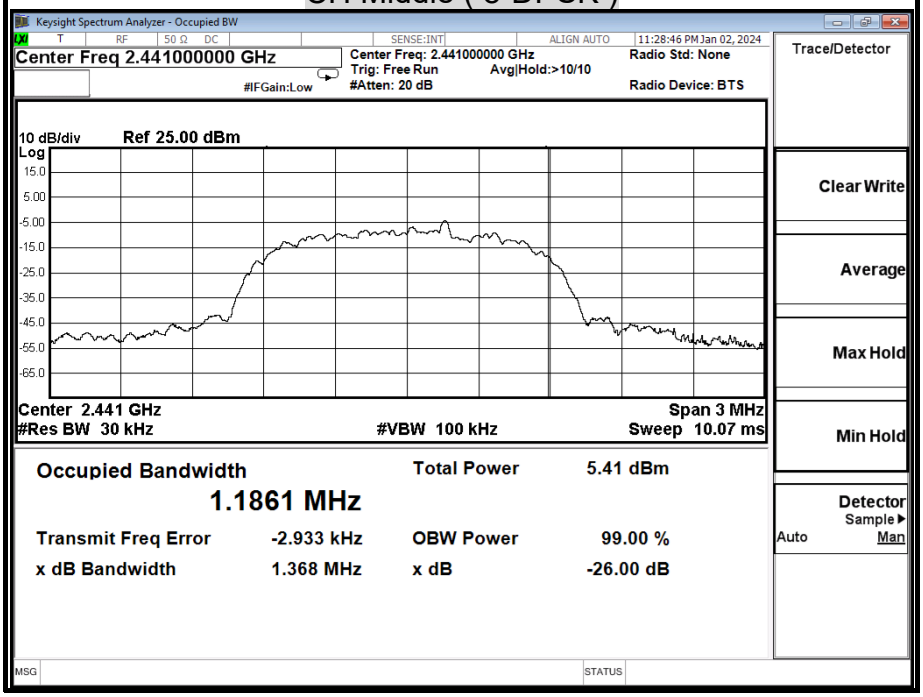

This document cannot be reproduced except in full, without prior written approval of the Company. 本報告未經本公司書面許可，不可部份複製。

CH High (8-DPSK)

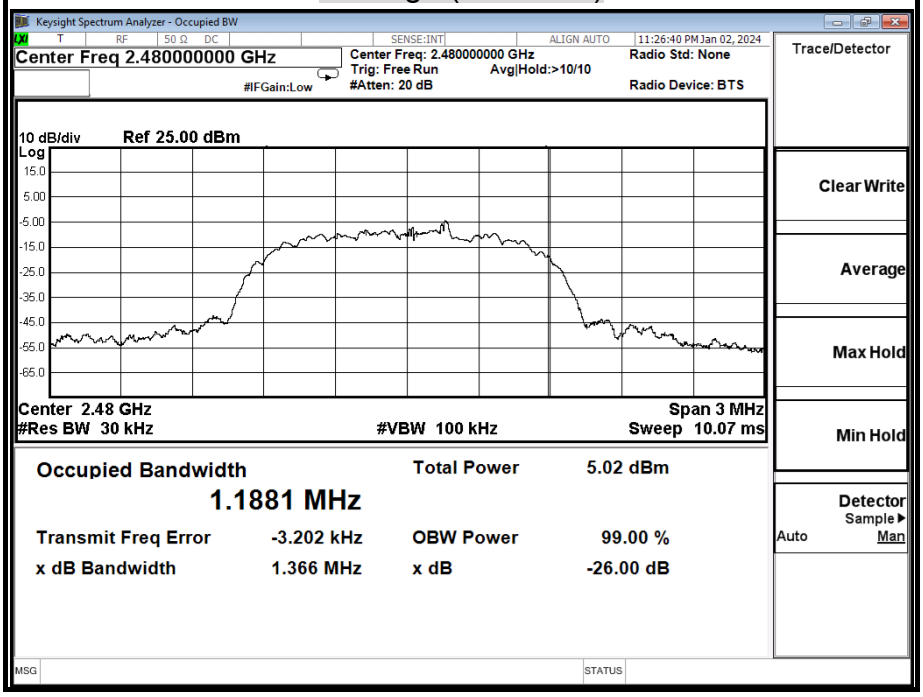

This document cannot be reproduced except in full, without prior written approval of the Company. 本報告未經本公司書面許可，不可部份複製。

8.3 MAXIMUM PEAK OUTPUT POWER

LIMITS

RSS-247 Issue 3 § 5.4 For DTSs employing digital modulation techniques operating in the bands 902-928 MHz and 2400-2483.5 MHz, the maximum peak conducted output power shall not exceed 1W. The e.i.r.p. shall not exceed 4 W, except as provided in section 5.4(e).

TEST SETUP

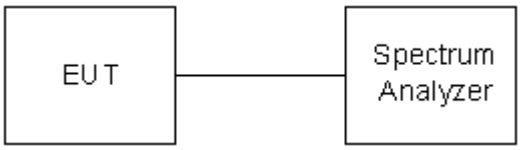

TEST PROCEDURE

The RF power output was measured with a Spectrum Analyzer connected to the RF Antenna connector (conducted measurement) while EUT was operating in transmit mode at the appropriate center frequency, A power meter was used to record the shape of the transmit signal.

Peak Power set:
1. RBW ≥ DTS bandwidth.
2. Set the VBW ≥ [3 × RBW].
3. Set the span ≥ [1.5 × DTS bandwidth].
4. Detector = peak.
5. Sweep time = auto couple.
6.Trace mode = max hold.
7. Allow trace to fully stabilize.
8.Use the instrument's band/channel power measurement function with the band limits set equal to the DTS bandwidth edges (for some instruments, this may require a manual override to select the peak detector). If the instrument does not have a band power function, then sum the spectrum levels (in linear power units) at intervals equal to the RBW extending across the DTS channel bandwidth.

This document cannot be reproduced except in full, without prior written approval of the Company. 本報告未經本公司書面許可，不可部份複製。

Average power set:

1.Measure the duty cycle D of the transmitter output signal
2. Set span to at least 1.5 times the OBW.
3. Set the RBW = ≥ DTS bandwidth
4. Set VBW ≥ [3 × RBW].
5. Number of points in sweep ≥ [2 × span / RBW]. (This gives bin-to-bin spacing ≤ RBW / 2, so that narrowband signals are not lost between frequency bins.)
6.Manually set sweep time ≥ [10 × (number of points in sweep) × (total ON/OFF period of the transmitted signal)].
7. Set detector = RMS (power averaging).
8. Perform a single sweep.
9. Compute power by integrating the spectrum across the OBW of the signal using the instrument's band power measurement function with band limits set equal to the OBW band edges. If the instrument does not have a band power function, then sum the spectrum levels (in power units) at intervals equal to the RBW extending across the entire OBW.
10. Add [10 log (1 / D)], where D is the duty cycle, to the measured power to compute the average power during the actual transmission times.

This document cannot be reproduced except in full, without prior written approval of the Company. 本報告未經本公司書面許可，不可部份複製。

TEST RESULTS

Model Name	AT-LP70XBT	Test By	Peter Chu
Temp & Humidity	22.5°C, 45%	Test Date	2023/12/27

Modulation Type: GFSK / DH5

Channel	Channel Frequency (MHz)	Peak Power Output (dBm)	Peak Power Output (mW)	Limit (mW)	Result
Low	2402	0.88	1.22	125	PASS
Mid	2441	1.12	1.29		PASS
High	2480	1.04	1.27		PASS

Modulation Type: 8-DPSK / 3-DH5

Channel	Channel Frequency (MHz)	Peak Power Output (dBm)	Peak Power Output (mW)	Limit (mW)	Result
Low	2402	0.74	1.19	125	PASS
Mid	2441	1.00	1.26		PASS
High	2480	0.97	1.25		PASS

This document cannot be reproduced except in full, without prior written approval of the Company. 本報告未經本公司書面許可，不可部份複製。

Average Power Data

Modulation Type: GFSK / DH5

Channel	Channel Frequency (MHz)	Measure Power (dBm)	10 log (1 / D)	Average Power (dBm)
Low	2402	-0.54	1.10	0.57
Middle	2441	-0.25	1.10	0.85
High	2480	-0.34	1.10	0.77

Modulation Type: 8-DPSK / 3-DH5

Channel	Channel Frequency (MHz)	Measure Power (dBm)	10 log (1 / D)	Average Power (dBm)
Low	2402	-3.79	1.10	-2.68
Middle	2441	-3.51	1.10	-2.40
High	2480	-3.59	1.10	-2.48

This document cannot be reproduced except in full, without prior written approval of the Company. 本報告未經本公司書面許可，不可部份複製。

MAXIMUM PEAK OUTPUT POWER

CH Low / GFSK

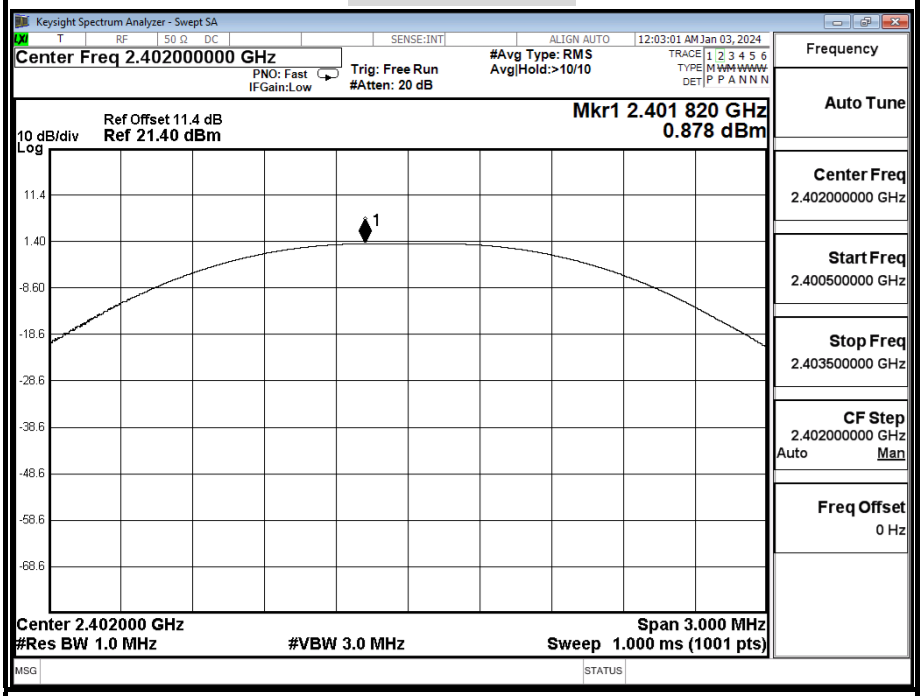

CH Middle / GFSK

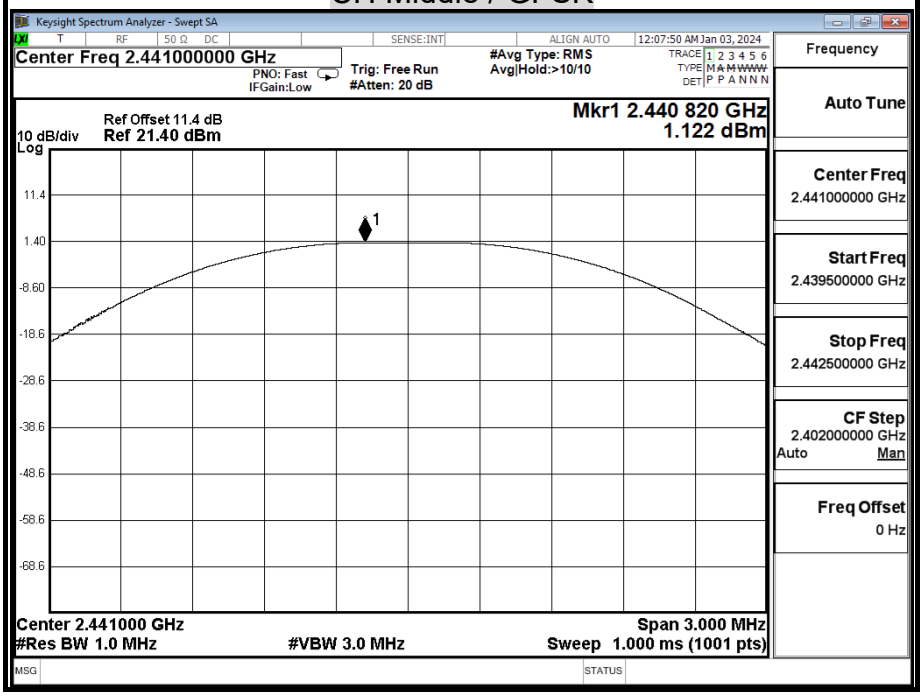

This document cannot be reproduced except in full, without prior written approval of the Company. 本報告未經本公司書面許可，不可部份複製。

CH High / GFSK

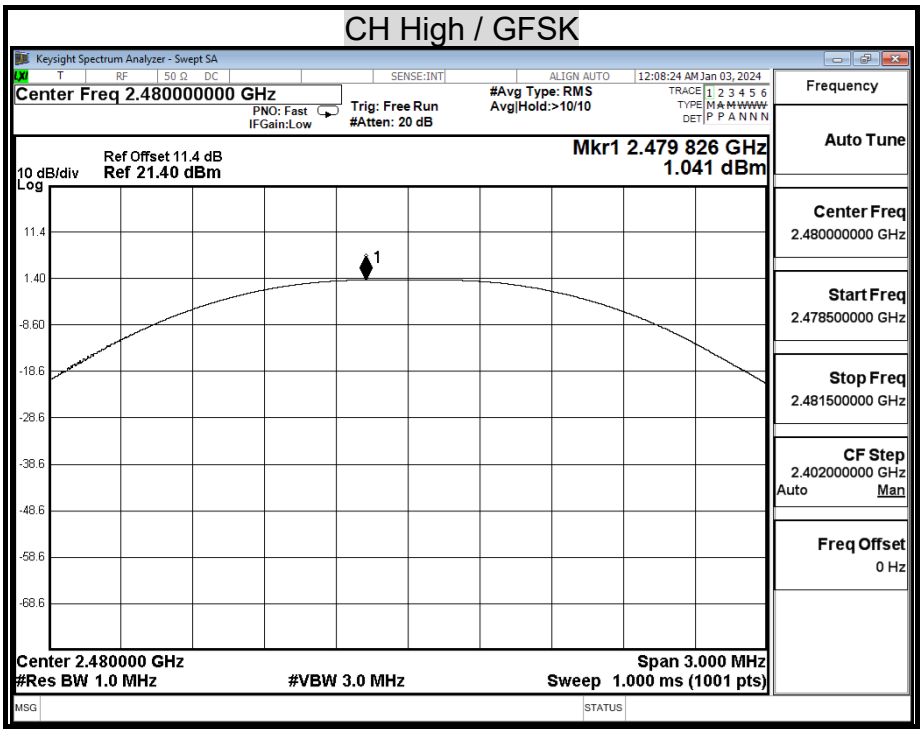

This document cannot be reproduced except in full, without prior written approval of the Company. 本報告未經本公司書面許可，不可部份複製。

CH Low / 8-DPSK

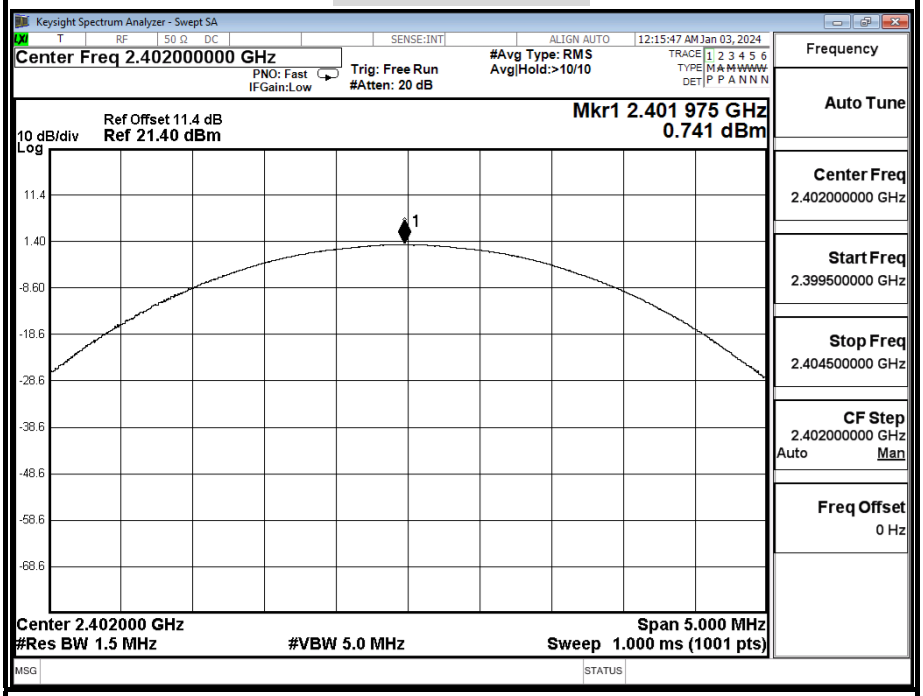

CH Middle / 8-DPSK

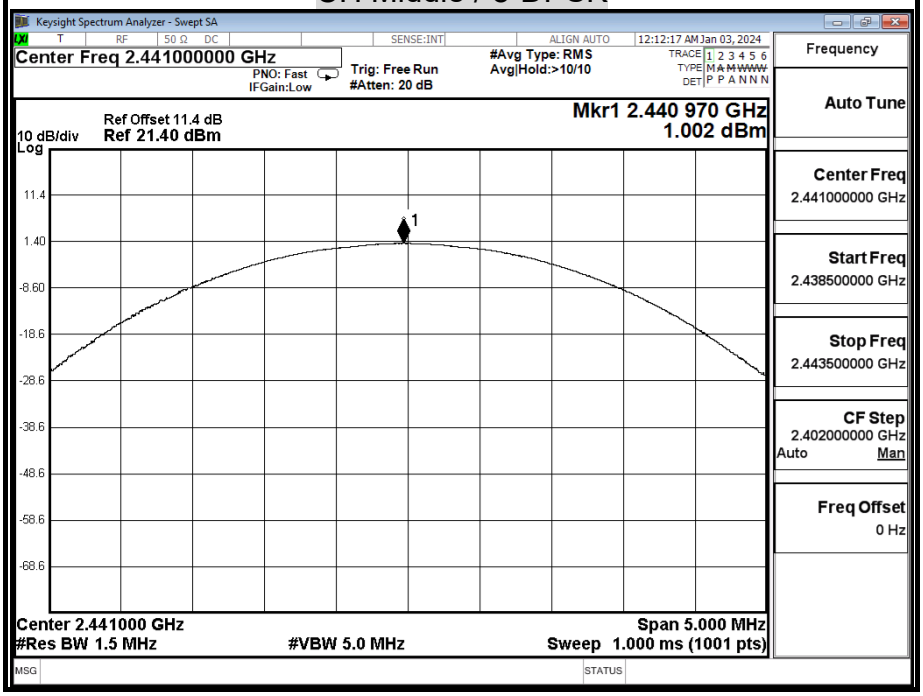

This document cannot be reproduced except in full, without prior written approval of the Company. 本報告未經本公司書面許可，不可部份複製。

CH High / 8-DPSK

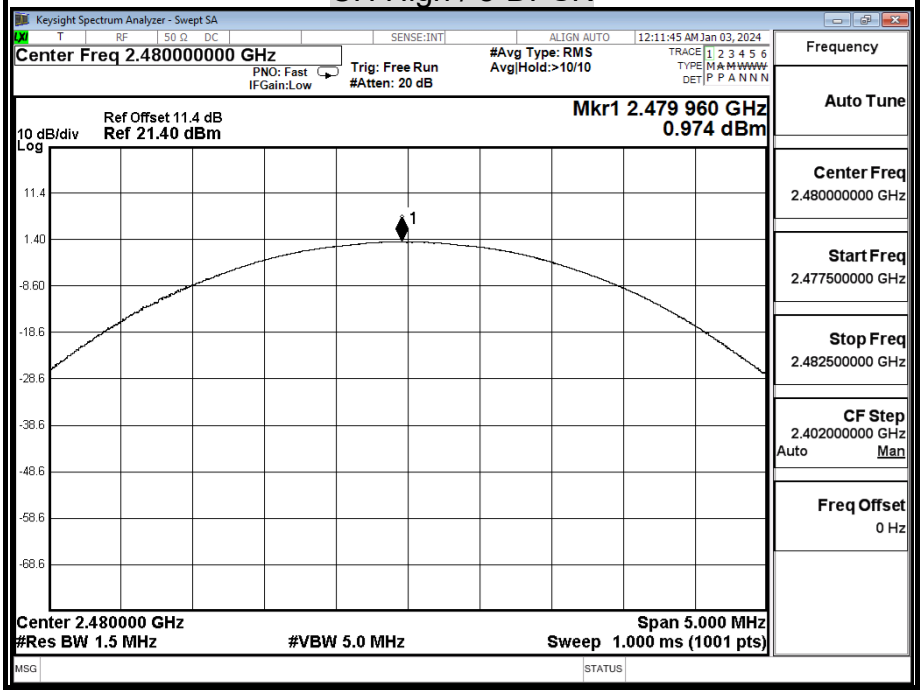

This document cannot be reproduced except in full, without prior written approval of the Company. 本報告未經本公司書面許可，不可部份複製。

AVERAGE POWER

CH Low / GFSK

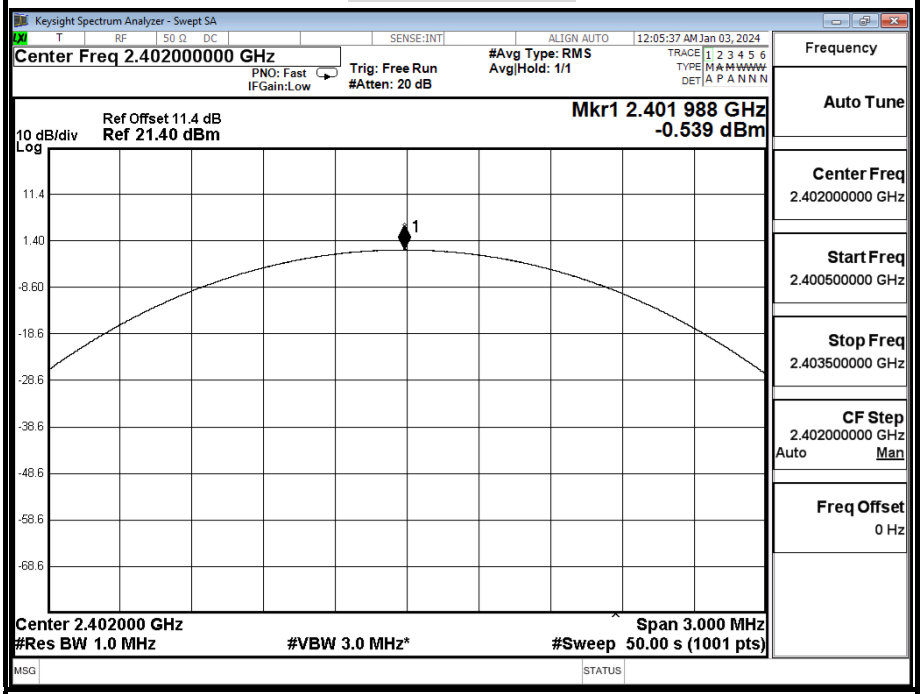

CH Mid / GFSK

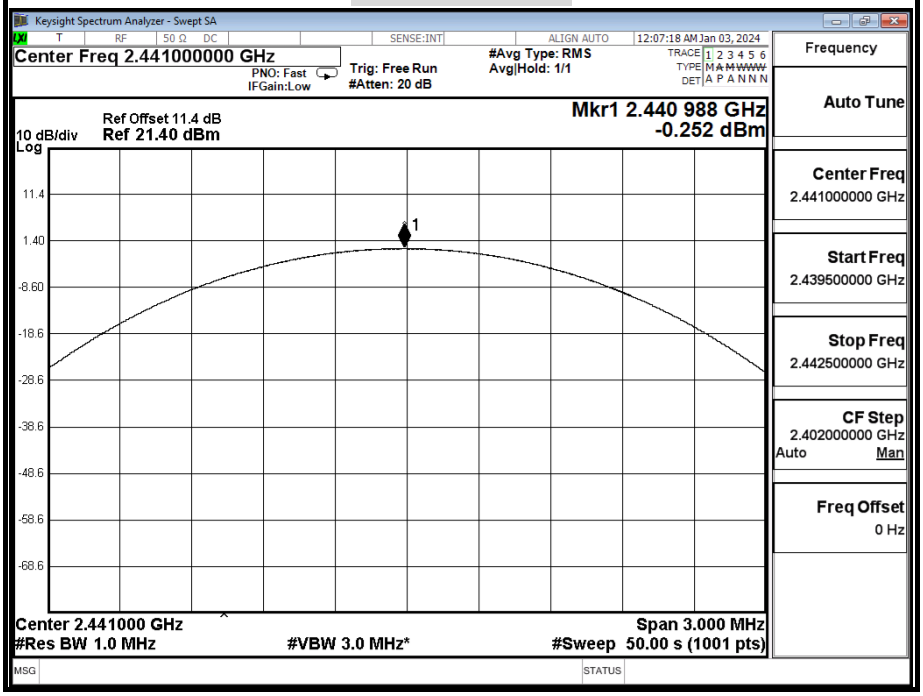

This document cannot be reproduced except in full, without prior written approval of the Company. 本報告未經本公司書面許可，不可部份複製。

CH High / GFSK

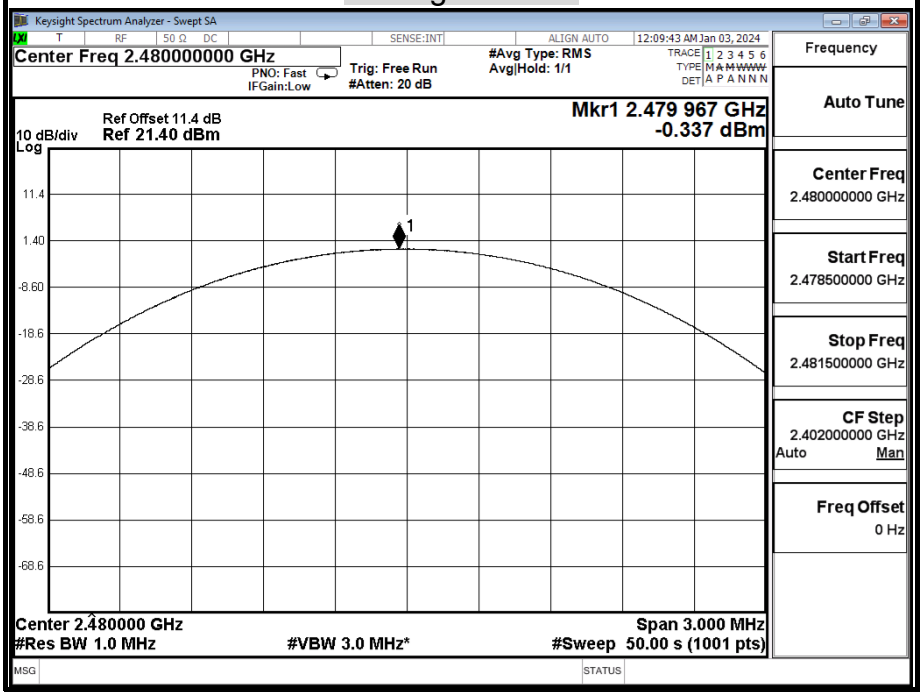

This document cannot be reproduced except in full, without prior written approval of the Company. 本報告未經本公司書面許可，不可部份複製。

CH Low / 8-DPSK

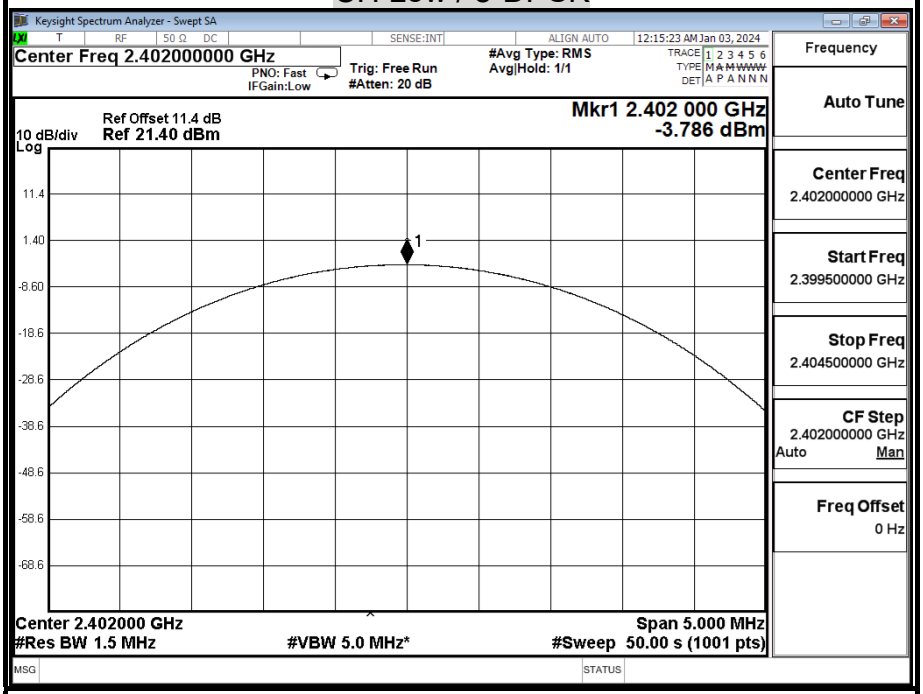

CH Mid / 8-DPSK

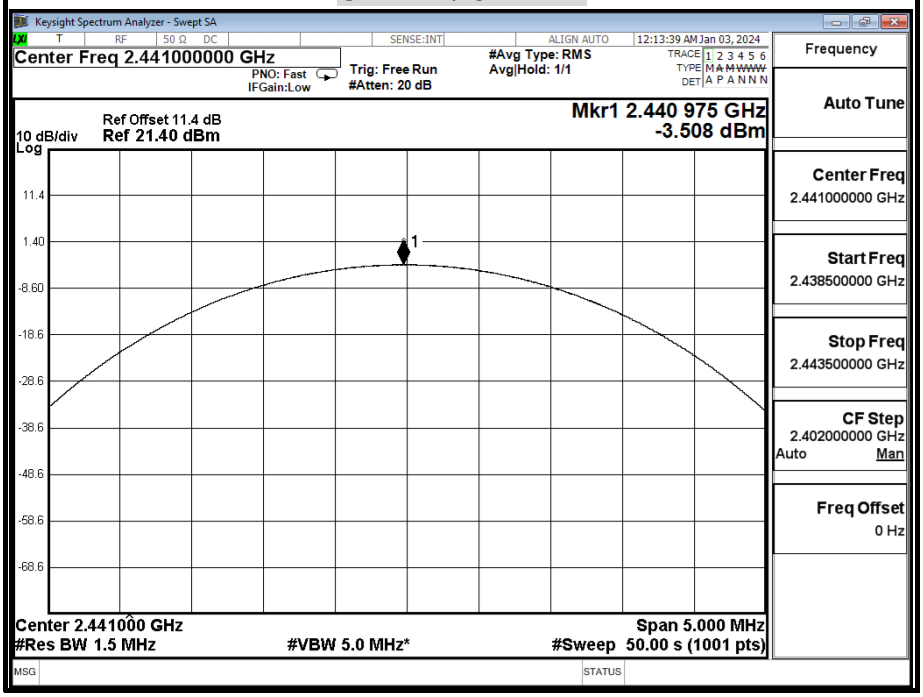

This document cannot be reproduced except in full, without prior written approval of the Company. 本報告未經本公司書面許可，不可部份複製。

CH High / 8-DPSK

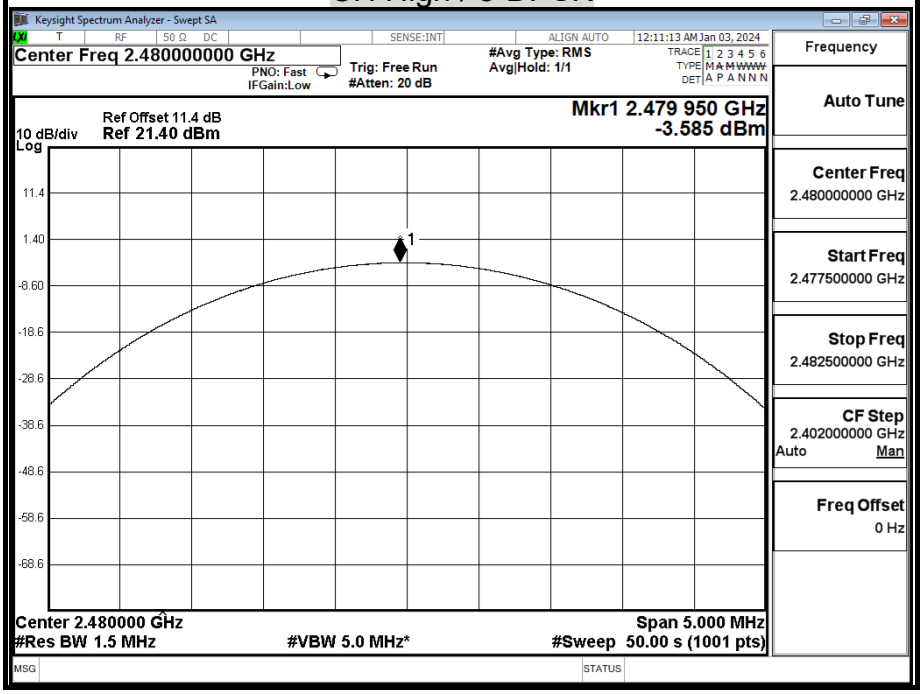

This document cannot be reproduced except in full, without prior written approval of the Company. 本報告未經本公司書面許可，不可部份複製。

8.4 HOPPING CHANNEL SEPARATION

LIMITS

RSS-247 section 5.1 (b) Frequency hopping systems operating in the band 2400-2483.5 MHz may have hopping channel carrier frequencies that are separated by 25 kHz or two-thirds of the -20 dB bandwidth of the hopping channel, whichever is greater, provided that the systems operate with an output power no greater than 0.125 W.

TEST SETUP

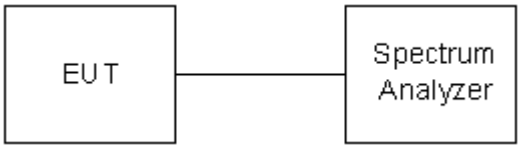

TEST PROCEDURE

1. Check the calibration of the measuring instrument using either an internal calibrator or a known signal from an external generator.
2. Position the EUT as shown in test setup without connection to measurement instrument. Turn on the EUT and connect it to measurement instrument. Then set it to any one convenient frequency within its operating range.
3. By using the MaxHold function record the separation of adjacent channels.
4. Measure the frequency difference of these two adjacent channels by spectrum analyzer MARK function. And then plot the result on spectrum analyzer screen.
5. Repeat above procedures until all frequencies measured were complete.

This document cannot be reproduced except in full, without prior written approval of the Company. 本報告未經本公司書面許可，不可部份複製。

TEST RESULTS

Refer to section 8.1, 20dB bandwidth measurement, the measured channel separation should be greater than two-third of 20dB bandwidth or Minimum bandwidth.

Model Name	AT-LP70XBT	Test By	Peter Chu
Temp & Humidity	22.5°C, 45%	Test Date	2023/12/27

Modulation Type: GFSK / DH5

Channel	Adjacent Hopping Channel Separation (MHz)	Two –third of 20dB bandwidth (MHz)	Minimum Bandwidth (kHz)	Result
2402MHz	1.00	0.75	25	PASS
2441MHz	1.00	0.75	25	PASS
2480MHz	1.00	0.75	25	PASS

Modulation Type: 8-DPSK / 3-DH5

Channel	Adjacent Hopping Channel Separation (kHz)	Two –third of 20dB bandwidth (kHz)	Minimum Bandwidth (kHz)	Result
2402MHz	1.00	0.93	25	PASS
2441MHz	1.00	0.93	25	PASS
2480MHz	1.00	0.93	25	PASS

This document cannot be reproduced except in full, without prior written approval of the Company. 本報告未經本公司書面許可，不可部份複製。

HOPPING CHANNEL SEPARATION

GFSK(Low)

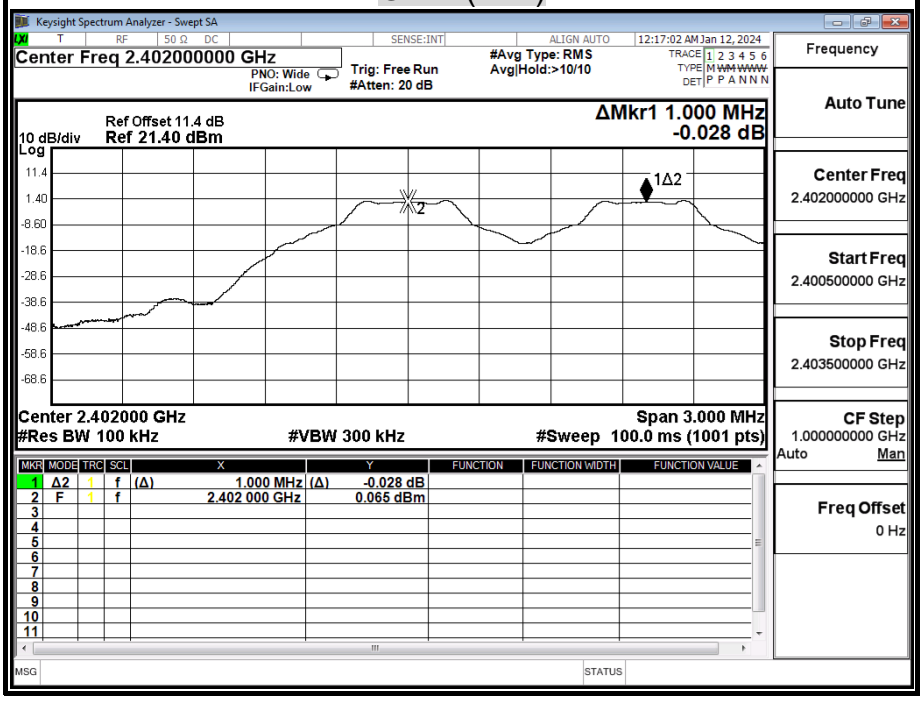

GFSK(Middle)

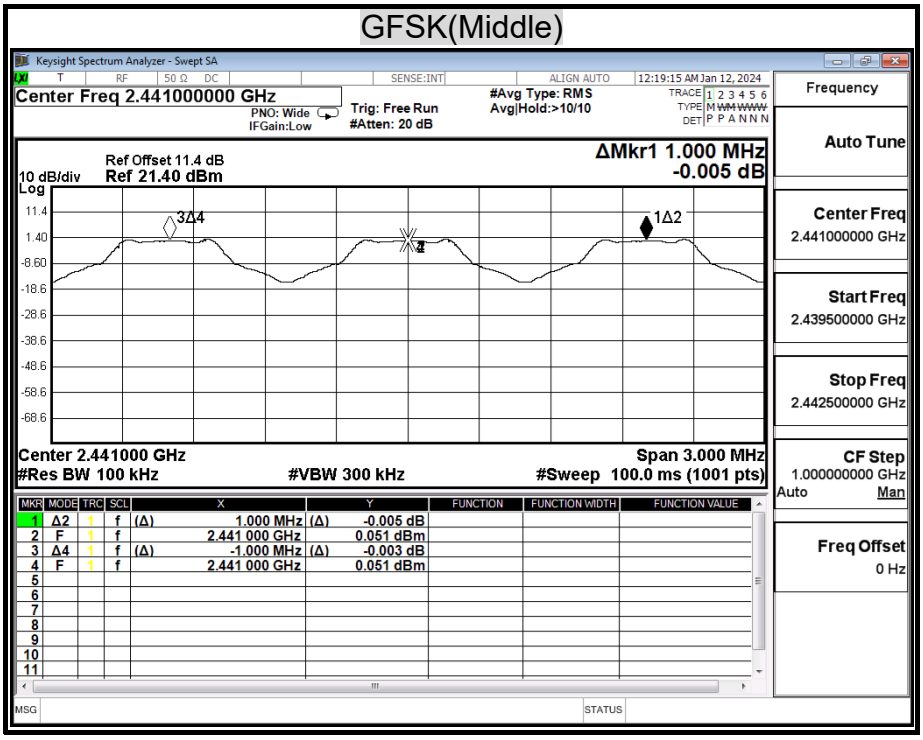

This document cannot be reproduced except in full, without prior written approval of the Company. 本報告未經本公司書面許可，不可部份複製。

GFSK(High)

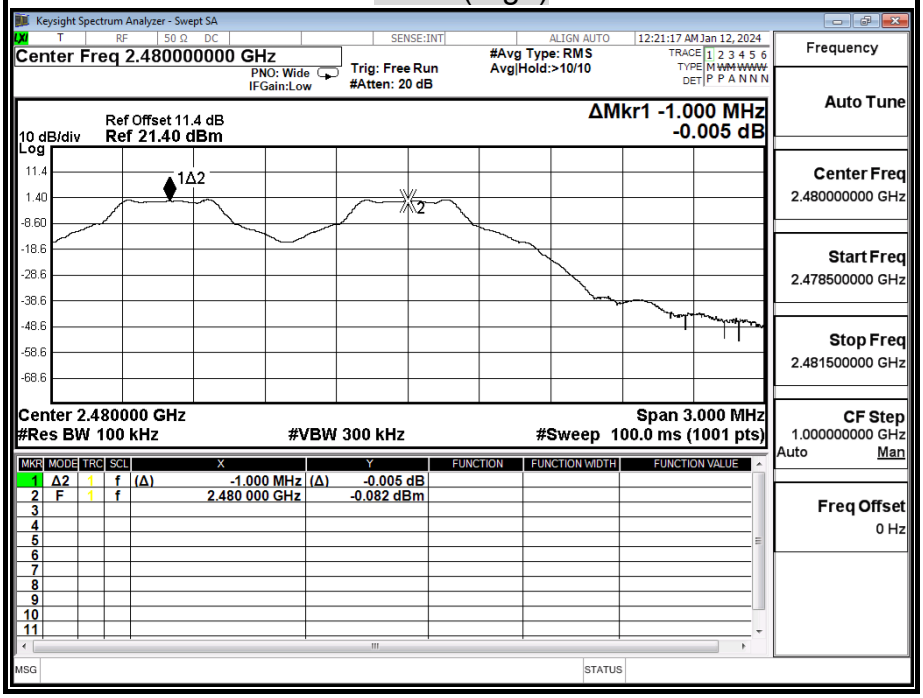

8-DPSK (Low)

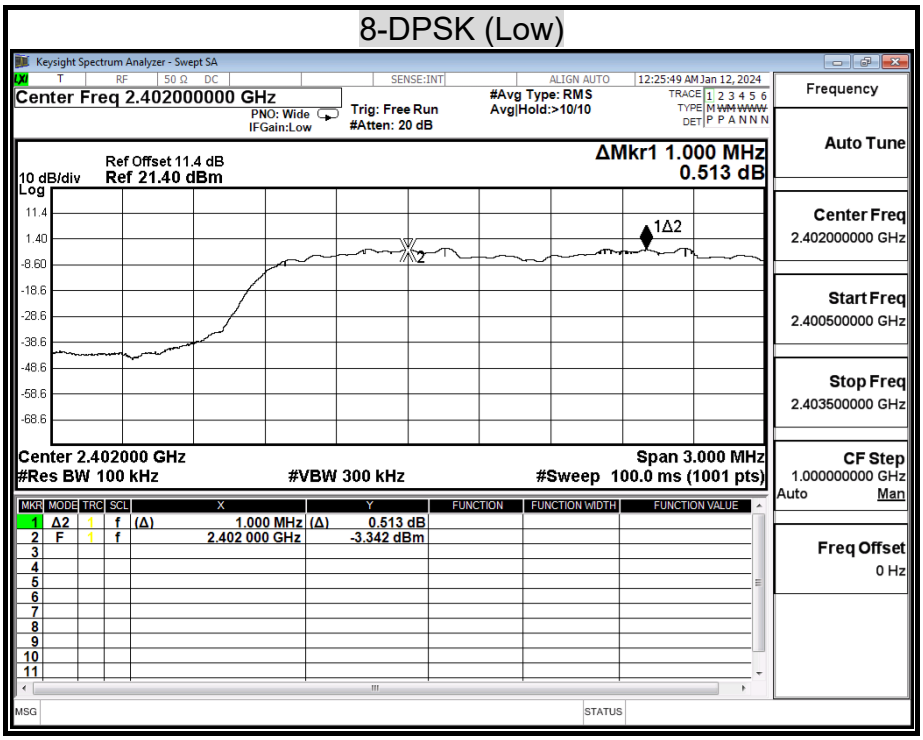

This document cannot be reproduced except in full, without prior written approval of the Company. 本報告未經本公司書面許可，不可部份複製。

8-DPSK (Middle)

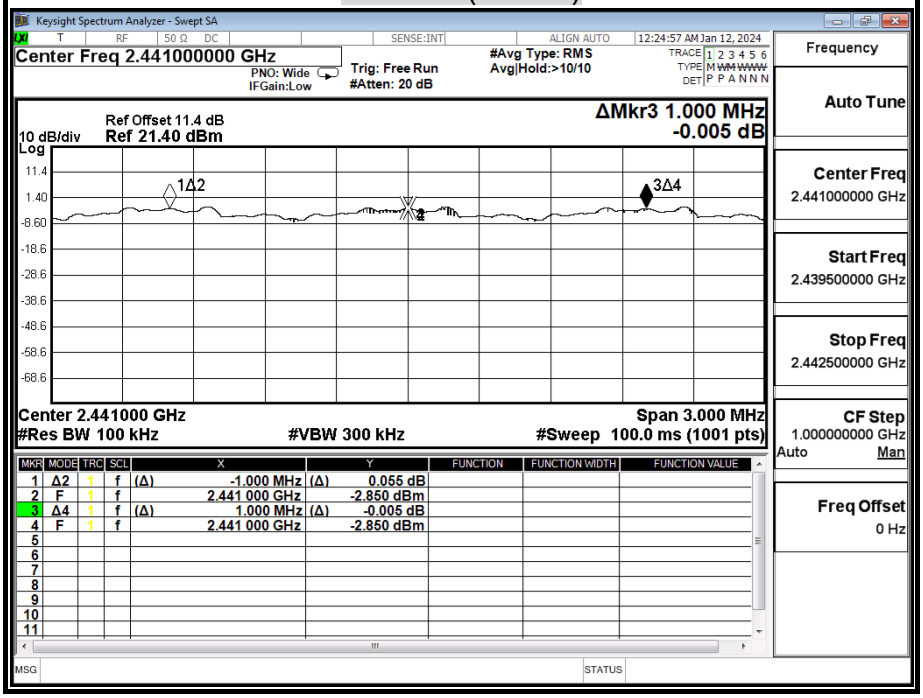

8-DPSK (High)

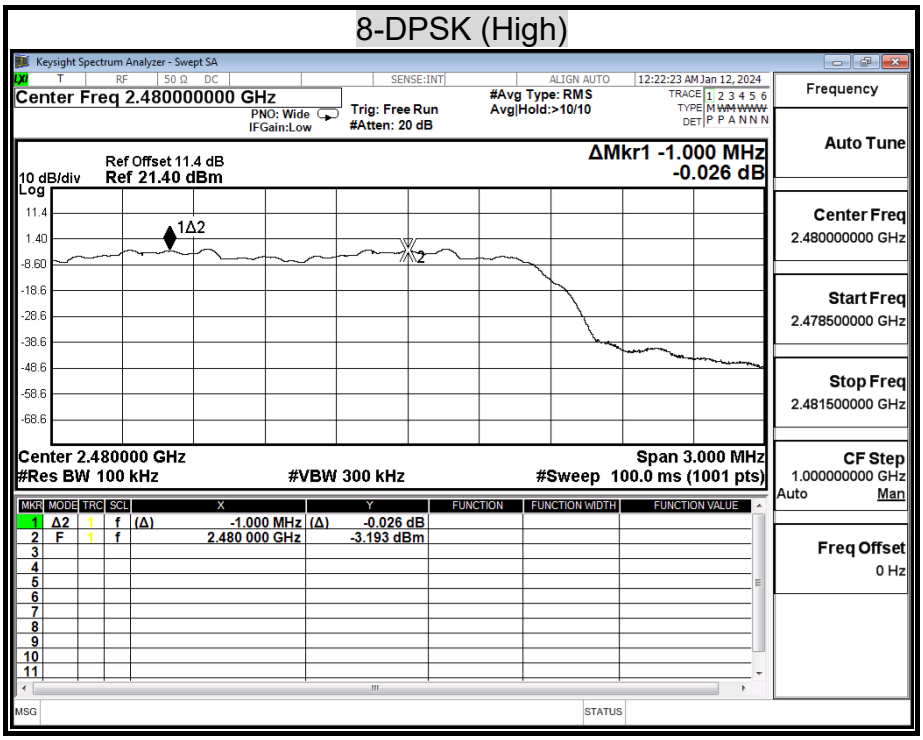

This document cannot be reproduced except in full, without prior written approval of the Company. 本報告未經本公司書面許可，不可部份複製。