KROHNE

© KROHNE 04/2004 7.02287.21.00

CH

OPTIWAVE 7300 C
Radar Level Meter

Measurement of distance, level and volume of liquids, pastes and solids

- **Easy installation**
- **Wizard driven**
- **Service and maintenance-free**

General

This is a quick-start guide only. For further information please consult the handbook, data sheet, special manuals and certificates supplied on CD-ROM.

Installation, assembly, commissioning and servicing must only be undertaken by trained personnel. Maintenance which is considered relevant to safety in the sense of explosion protection must only be carried out by the manufacturer, his agents or under the supervision of experts.

For use in hazardous areas, special codes and regulations are applicable, which are supplied in a separate document that describes all ATEX hazardous area information.

Responsibility as to suitability and intended use of this device rests solely with the user. The supplier does not accept any liability resulting from misuse by the customer. Improper installation and operation of our level gauges may lead to loss of warranty. In addition, the "General conditions of sale", found on the back of the invoice and forming the basis of the purchasing contract, are applicable.

If you need to return the device to the manufacturer or supplier, please complete the form given on the CD-Rom and attach to the device. KROHNE regrets that it cannot repair or check your device unless accompanied by this completed form.

Items supplied

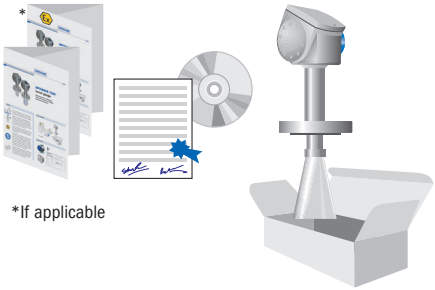

*If applicable

Visual check

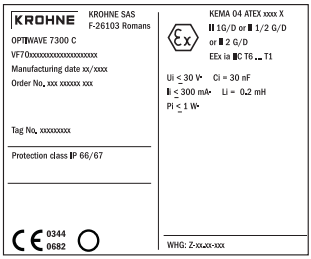

Handling and installation instructions

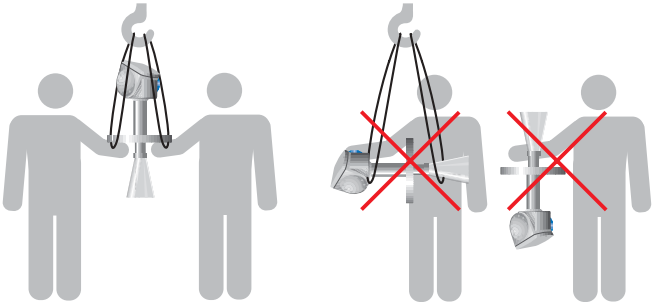

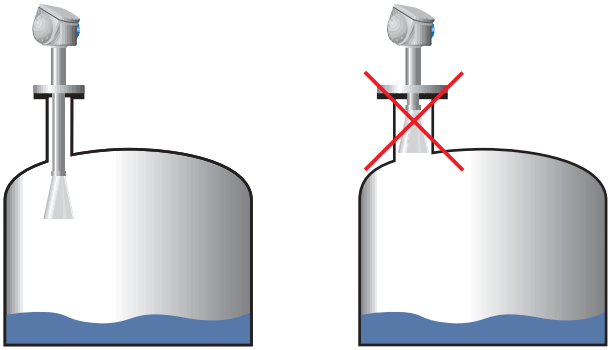

Antenna must protrude from nozzle base.

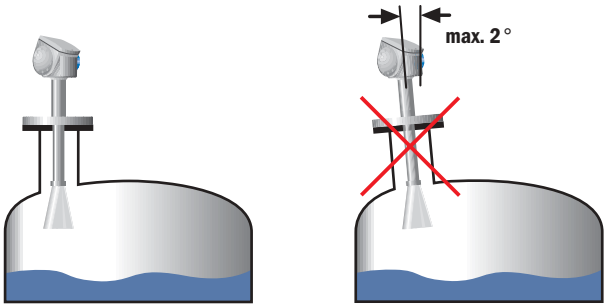

Handling and installation instructions

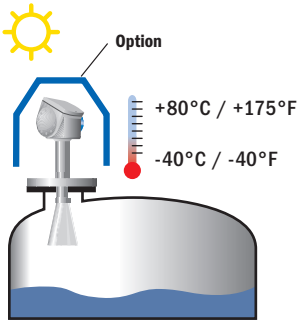

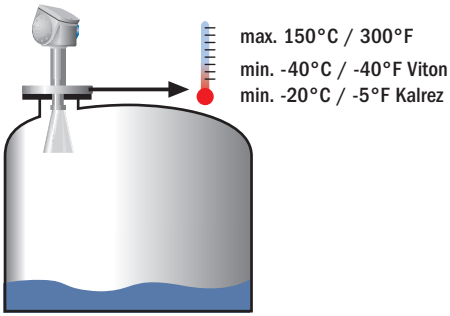

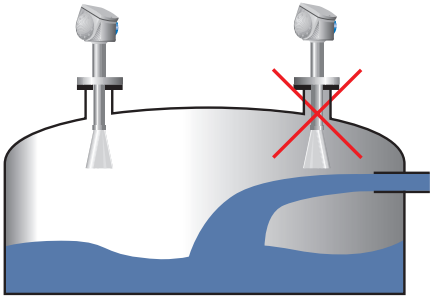

Install away from entry pipe.

DN 40 / 50:
> 1/7 H, but max. 1/3 D

DN 80:
> 1/10 H, but max. 1/3 D

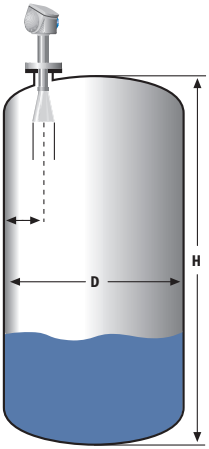

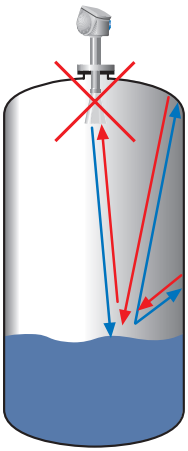

Mount off-centre to avoid multiple reflections.

Special considerations

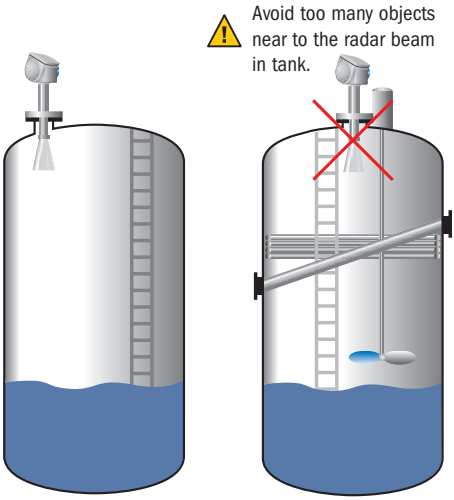

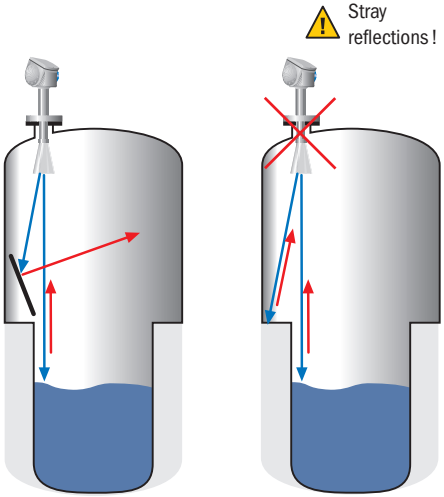

Stilling wells and bypass chambers

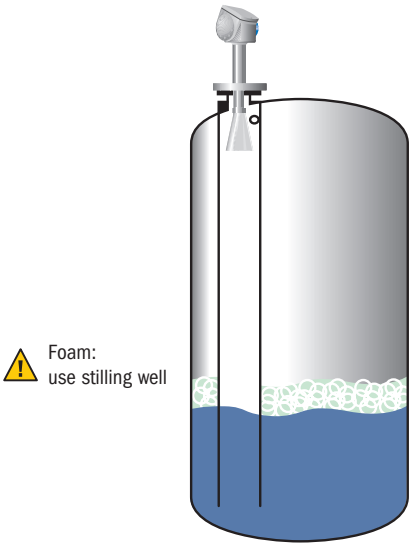

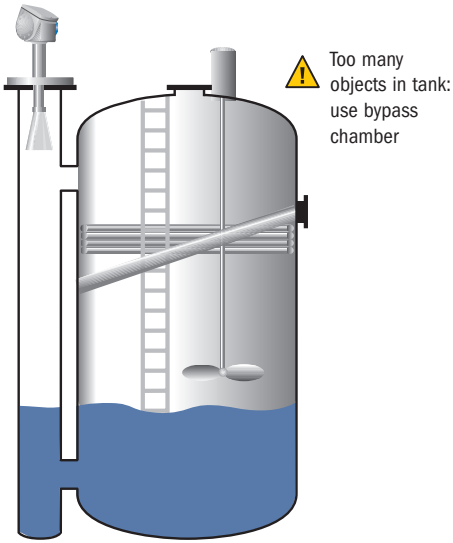

Dimensions and Weights

Flange (Antenna DN 80)

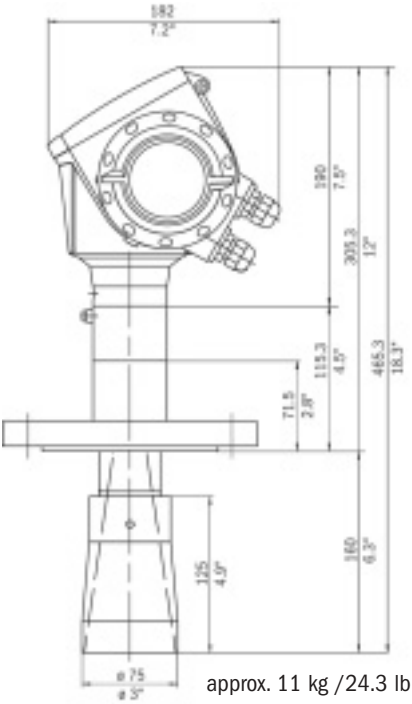

approx. 11 kg /24.3 lb

Antenna DN 80 with antenna extension

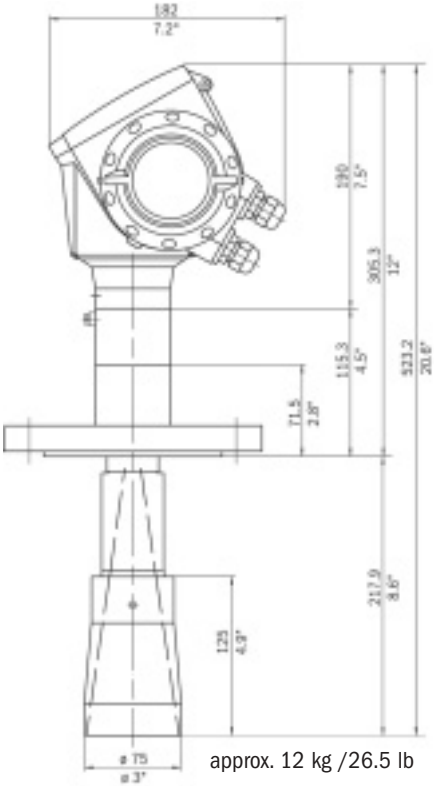

approx. 12 kg /26.5 lb

Note:
Additional antenna extension of
105 mm / 4.1" length available.

Dimensions and Weights

Flange (Antenna DN 40/50)

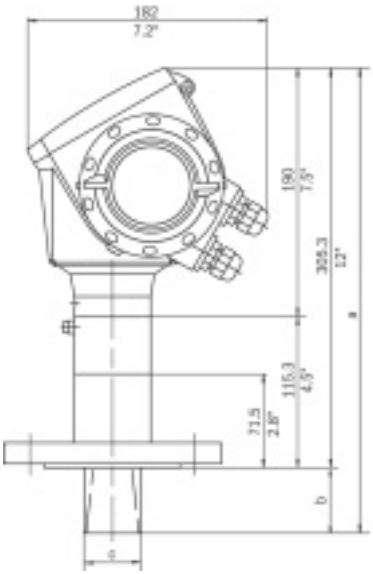

Thread

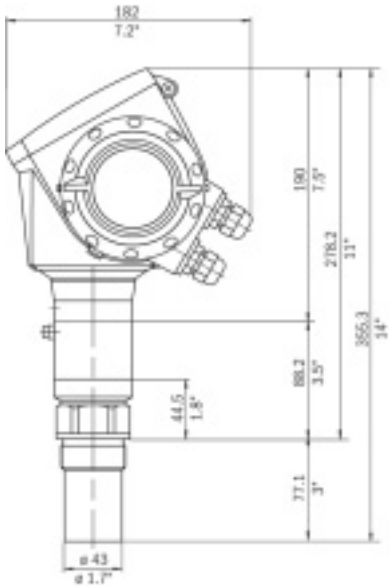

Dimensions in mm and inch

Antenna type	c mm / inch	b mm / inch	a mm / inch
Antenna DN 40	39 / 1.5	38.5 / 1.5	343.8 / 13.5
Antenna DN 50	43 / 1.7	50 / 2	355.3 / 14

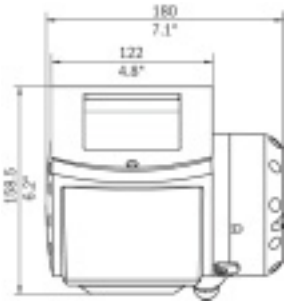

Note:
Cable glands are not delivered with the device.

Terminal Compartment and Terminals

Connection procedure

- Unscrew terminal compartment cover.
- Wire up using standard procedures.
- Apply grease to thread of cover before closing.

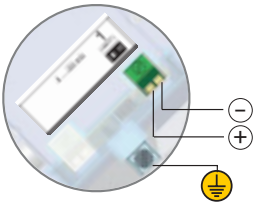

Output 1

4 ... 20 mA/HART
or
3.8 ... 20.5 mA/HART
acc. to NAMUR NE 43

Wiring options

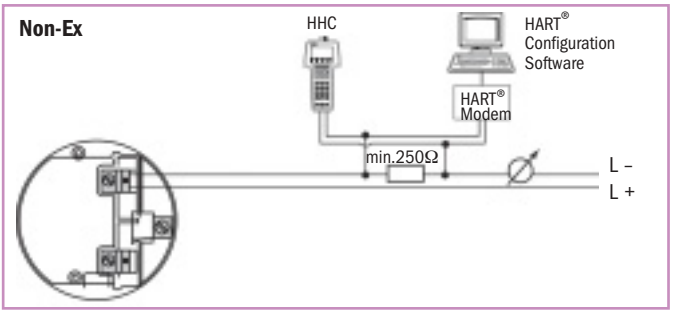

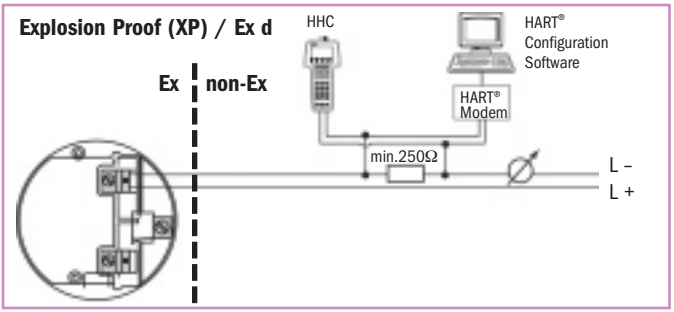

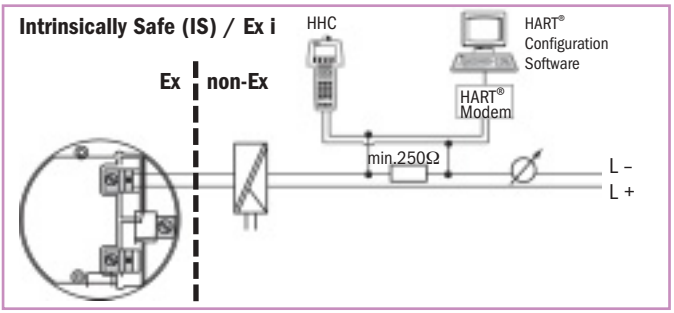

Note: Other options how to connect the HHC and modem to the HART® loop are available.

Technical data extract

Application conditions	
Temperature	
Ambient temperature	-40...+80°C / -40...+175°F; EEx i: -40...+60°C / -40...+140°F
Storage temperature	-40...+85°C / -40...+185°F
Flange temperature	-40...+150°C / -40...+300°F (Viton gasket) -20...+150°C / -5...+300°F (Kalrez 6375 gasket)
Thermal shock resistance	100°C/min
Process conditions	
Operating pressure	-1...40 bar / -14.5...580 psig; subject to process connection used and flange temperature
Dielectric constant	1.5
Vibration resistance	IEC 68-2-6 and prEN 50178 (10...57Hz: 0.075 mm / 57...150 Hz: 1 g)
Protection category	IP 66/67 equiv. to NEMA 6-6X
Output	
Output signal	
Output 1	4 ... 20 mA HART® or 3.8 ... 20.5 mA acc. to NAMUR NE 43
Accuracy	0.05% (rel. 20 mA; 20°C / 68°F)
Resolution	±2 µA
Temperature drift	Typically 50 ppm/K
Error signal	High: 22 mA; Low: 3.6 mA acc. to NAMUR NE 43
Max. Load	350 ohm
Approvals	
Overfill protection	WHG
ATEX	ATEX II G/D 1, 1/2, 2 EEx ia IIC T6; ATEX II G/D 1/2, 2 EEx d ia IIC T6
FM	IS class I Div. 1 Gr. A...G; XP class I Div. 1 Gr. A...G
CSA	IS class I Div. 1 Gr. A...G; XP class I Div. 1 Gr. A...G

For futher data see data sheet, approvals and handbook on CD-ROM

Hotline: +33(0)4.75.05.44.00 · Fax: +33(0)4.75.05.44.97
www.krohne.com for local contacts · E-mail: level@krohne.fr

KROHNE

Human interface

Normal mode:
Selects display style.

Program mode:
Moves cursor to right or selects next menu level.

Normal mode:
Selects type of information displayed.

Program mode:
Moves menu selector up the list or increments parameter value.

Program mode:
Saves or confirms parameter.

Normal mode:
Selects measurement parameters to be displayed.

Program mode:
ESC-function returns to previous menu. If top menu reached, returns to normal mode.
Any paramenter value entered is not stored.

Program mode:
Moves menu selector down list or decrements parameter value.

Human interface

Hot keys

Mode	Hot key activated when:	Action
Normal	3 seconds	Enters program mode
Program		Saves current function used as quick link
Normal	3 seconds	Active screen stored as default screen
All modes	3 seconds	HMI will reset to default language
Program	+ 3 seconds	Returns to normal mode (last screen displayed)
Normal (signal screen)	3 seconds	Signal editing function

Startup procedure

After mechanical and electrical installation, start-up, then the device performs a self-test and is ready for use.

The Wizard automatically displays parameter setup steps on-screen.

If false parameter value is inputted (e.g. outside limits) an error message / icon occurs, and after 10 seconds the screen switches to HELP function.

If error persists, download log file using PACTware and send to e-mail address given on back rear page. For further information see PACTware handbook on CD-ROM.

Setup procedure

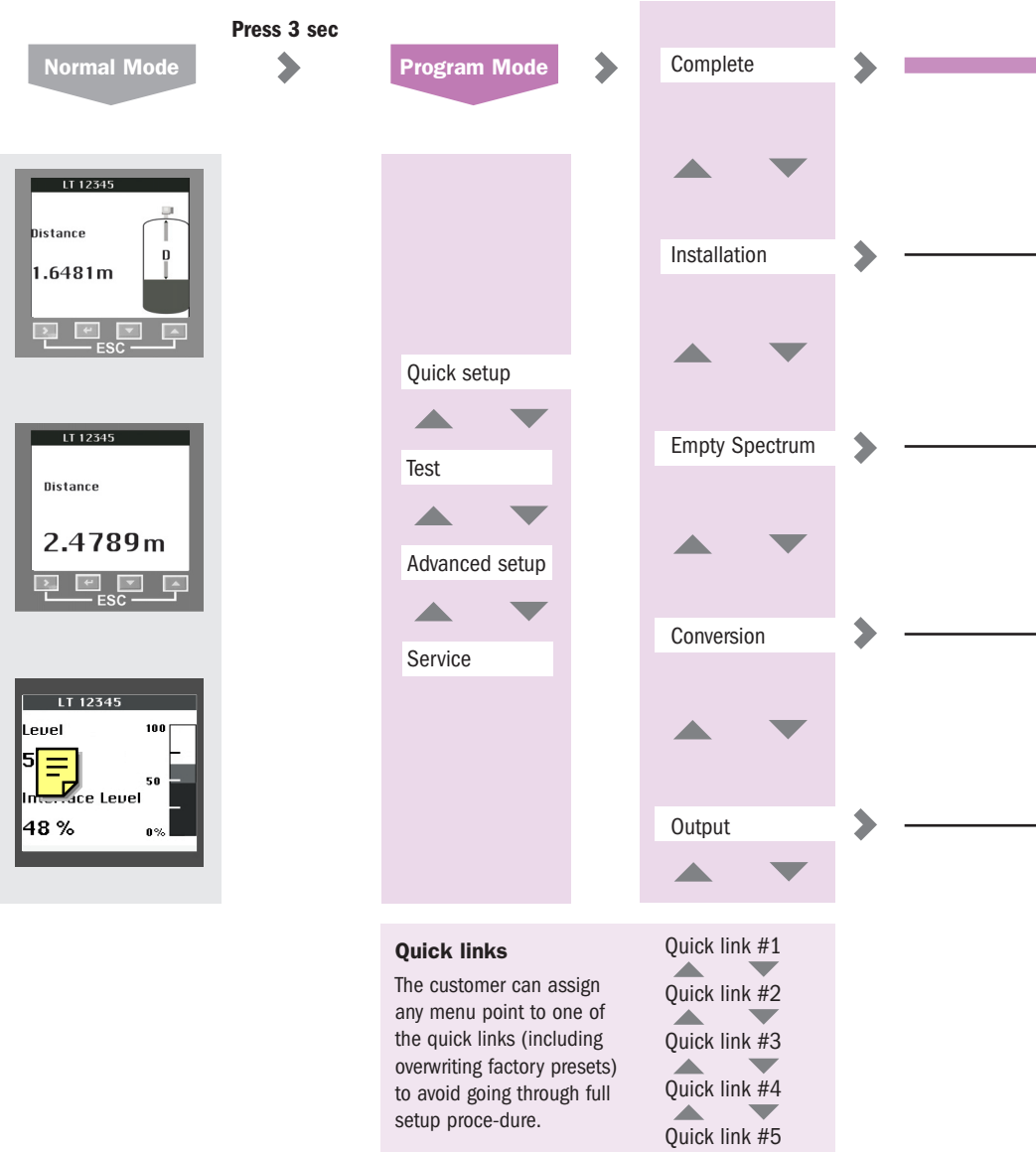

Setup procedure

1. Installation type
2. Tank height
3. Measuring range
4. Application type
5. Stillwell diameter*
6. Blocking distance
7. Settings summary
8. Save?

*if stillwell selected in step 4

1. Calculation will not work if tank full. Continue?
2. Are all moving parts on?
3. Is tank partially filled or empty?
4. Level measurement value. Edit?
5. Start recording
6. Display calculated spectrum
7. Save?

1. Conversion wizard type
2. Length unit
3. Density of product 1 (yes or no)
4. Density unit and value
5. Tank shape
6. Sphere Diameter
7. Tank Bottom Shape
8. Tank Diameter (Cyllindrical)
9. Tank Height (Cyllindrcal)
10. Tank Height 1 (Rectangular with Conical end)
11. Tank Height 2 (Rectangular with Conical end)
12. Tank Width (Rectangular with Conical end)
13. Tank Depth (Rectangular with Conical end)
14. Cone Depth (Rectangular with Conical end)
15. Tank Diameter (Cyllindrical with Conical end)
16. Tank Height 1 (Cyllindrical with Conical end)
17. Tank Height 2 (Cyllindrical with Conical end)
18. Cone Diameter (Cyllindrical with Conical end)
19. Tank Depth (Rectangular)
20. Tank Width (Rectangular)
21. Tank Height (Rectangular)
22. Angle of inclination X degrees
23. Conversion unit
24. Volume table values. Edit, save and exit setup (29)
25. Mass values. Save and exit the setup (29)
26. Length free unit name
27. Conversion free unit name
28. Enter free unit values, save and exit the setup (29)
29. Exit Setup

1. Output 1 (Hart)
2. 4 mA setting
3. 20 mA setting
4. Output range
5. Error handling
6. HART address
7. Settings summary
8. Save?

Full details see handbook on CD-ROM