Operation, Repair, Parts

Renegade TSP Torque Series Pump

3A6884B

EN

Renegade TSP is a hydraulic power pack for use with bolt torquing wrenches only. For professional use only.

Not approved for use in explosive atmospheres or hazardous (classified) locations.

Models: 17U632, 17U633, 17U634, 17U635

10,000 psi (68.9 MPa, 700 bar) Maximum Working Pressure

Important Safety Instructions

Read all warnings and instructions in this manual and on the unit before using the equipment. Be familiar with the controls and the proper usage of the equipment. Save these instructions.

SERVICE to every customer, every time
www.graco.com/techsupport
GRACO

PROVEN QUALITY. LEADING TECHNOLOGY.

Contents

Contents 2
Models 3
Warnings 4
Component Identification 7
Controls and Indicators 8
Grounding 9
Power Requirements 9
Extension Cords 9
Pressure Relief Procedure 10
Setup 11
Pendant Setup 11
Fill Oil Tank 11
Modes 12
Prime TSP Power Pack Procedure 12
Connect Hose and Tool 13
Hose Prime Procedure 13
Operation 14
Shut Down 15
Cleaning 15
Display 16
Main Menu Operation 16
Change Display Units 17
Select Control Device 17
Secondary Menu (Stored Data) 18
Maintenance 19
Recycling and Disposal at End of Life 19
Troubleshooting 20
Repair 28
Calibration Procedure 28
Pump Removal 30
Pump Installation 31
2-Way, Poppet Valve Replacement 32
Pressure Set Valve Replacement 33
Pressure Relief Valve Replacement (1,500 and 12,000 PSI) 33
4-Way Valve Replacement 34
Transducer Replacement 37
Pendant Battery Replacement 38
Hydraulic Schematic 39
Wiring Diagram - 120V 40
Wiring Diagram - 230V 41
Renegade TSP Torque Series Pump Parts 42
Manifold Assembly Parts 44
Motor Assembly Parts 46
Control Box Parts - 120V 48
Control Box Parts - 230V 50
Technical Specifications 52
Compliance 53
Radio Frequency Approvals 53
Graco Standard Warranty 54
Graco Information 55

Models

Model No.	Name	Voltage	Pendant	Maximum Working Pressure psi (MPa, bar)
17U632	Renegade TSP Torque Series Pump	120V	Corded	10,000 psi (68.9 MPa, 700 bar)
17U633	Renegade TSP Torque Series Pump	120V	Wireless	10,000 psi (68.9 MPa, 700 bar)
17U634	Renegade TSP Torque Series Pump	230V	Corded	10,000 psi (68.9 MPa, 700 bar)
17U635	Renegade TSP Torque Series Pump	230V	Wireless	10,000 psi (68.9 MPa, 700 bar)

Warnings

The following warnings are for the setup, use, grounding, maintenance, and repair of this equipment. The exclamation point symbol alerts you to a general warning and the hazard symbols refer to procedure-specific risks. When these symbols appear in the body of this manual or on warning labels, refer back to these Warnings. Product-specific hazard symbols and warnings not covered in this section may appear throughout the body of this manual where applicable.

⚠ WARNING

GROUNDING

This product must be grounded. In the event of an electrical short circuit, grounding reduces the risk of electric shock by providing an escape wire for the electric current. This product is equipped with an appropriate grounding electrical inlet. This product must be plugged into an outlet that is properly installed and grounded in accordance with all local codes and regulations.

- Improper installation of the grounding electrical inlet is able to result in a risk of electric shock.
- When repair or replacement of the electrical inlet is required, do not connect the grounding wire to either flat blade terminal.
- The wire with insulation having an outer surface that is green with or without yellow stripes is the grounding wire.
- Check with a qualified electrician or serviceman when the grounding instructions are not completely understood, or when in doubt as to whether the product is properly grounded.
- Do not modify the electrical inlet. Only connect the product to an extension cord having the same configuration as the electrical inlet.
- This product is for use on a nominal 120V or 230V circuit and has a grounding electrical inlet as illustrated in the figure below.

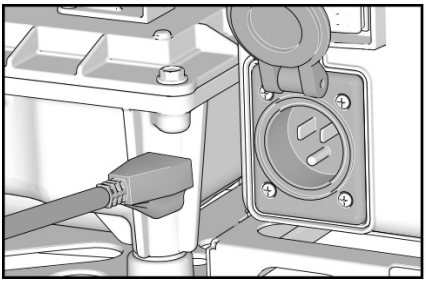

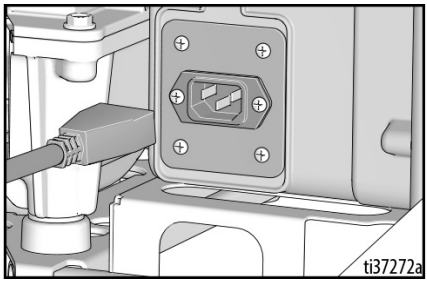

- Do not use a 3-to-2 adapter with this product.
- Extension Cords:
- Use only a 3-wire extension cord that has a grounding plug and a grounding receptacle that mates with the electrical inlet on the product.
- Make sure your extension cord is not damaged. Use 12 AWG (2.5 mm^2) minimum to carry the current that the product draws.
- An undersized cord results in a drop in line voltage and loss of power and overheating.

⚠ WARNING

SKIN INJECTION HAZARD

High-pressure leaks are able to inject oil into the body and cause serious bodily injury that can result in amputation. In the event that injection occurs, **get immediate surgical treatment.**

- Do not handle pressurized hoses. Escaping oil under pressure can penetrate the skin, causing serious injury.
- Do not stop or deflect leaks with your hand, body, glove or rag.
- Do not leave the unit energized or under pressure while unattended. When the unit is not in use, turn off the unit and follow the **Pressure Relief Procedure**.
- Check hoses and couplings daily. Replace worn or damaged parts immediately.
- This system is capable of producing 10,000 psi (68.9 MPa, 700 bar). Use Graco replacement parts or accessories that are rated at a minimum of 10,000 psi (68.9 MPa, 700 bar).
- Verify that all connections are secure before operating the unit.
- Know how to stop the unit and bleed pressure quickly. Be thoroughly familiar with the controls.

FIRE AND EXPLOSION HAZARD

Flammable fumes in work area can ignite or explode. To help prevent fire and explosion:

- This equipment generates sparks. Do not use in explosive atmospheres or hazardous (classified) locations.
- Use only in well-ventilated areas.
- Do not plug or unplug power cords, or turn power or light switches on or off, when flammable fumes are present.
- Keep work area free of debris, including solvent, rags, and gasoline.
- Keep a working fire extinguisher in the work area.

EQUIPMENT MISUSE HAZARD

Misuse can cause death or serious injury.

- Do not operate near children. Keep children away from equipment at all times.
- Do not overreach or stand on an unstable support. Keep effective footing and balance at all times.
- Stay alert and watch what you are doing.
- Do not leave the unit energized or under pressure while unattended. When the unit is not in use, turn off the unit and follow the **Pressure Relief Procedure**.
- Do not operate the unit when fatigued or under the influence of drugs or alcohol.
- Avoid damaging hydraulic hoses. Avoid sharp bends and kinks when routing hydraulic hoses. Do not kink or over-bend the hose. Using a bent or kinked hose will cause severe back-pressure. Sharp bends or kinks will cause internal damage to the hose leading to premature hose failure.
- Do not drop heavy objects on hydraulic hoses. A sharp impact may result in internal damage to the hose. Applying pressure to a damaged hose may cause it to rupture.
- Do not expose the hose to temperatures or to pressures in excess of those specified by the hose manufacturer.
- Do not use the hose as a strength member to pull or lift the equipment.
- Do not alter or modify equipment. Alterations or modifications may void agency approvals and create safety hazards.
- The system operating pressure must not exceed the pressure rating of the lowest rated piece in the system.
- Make sure all equipment is rated and approved for the environment in which you are using it.

⚠ WARNING

ELECTRIC SHOCK HAZARD

This equipment must be grounded. Improper grounding, setup, or usage of the system can cause electric shock.

- Turn off and disconnect extension cord before servicing equipment.
- Connect only to grounded electrical outlets.
- Use only 3-wire extension cords.
- Ensure ground prongs are intact on electrical inlet and extension cords.
- Store indoors.

LIFTING HAZARD

This equipment is heavy. To avoid injury, lift using:

- Two persons, or
- A hoist attach to the Lift Point.

MOVING PARTS HAZARD

Moving parts can pinch, cut or amputate fingers and other body parts.

- Keep clear of moving parts.
- Do not operate equipment with protective guards or covers removed.
- Before checking, moving, or servicing equipment, follow the **Pressure Relief Procedure** and disconnect all power sources.

PERSONAL PROTECTIVE EQUIPMENT

Wear appropriate protective equipment when in the work area to help prevent serious injury, including eye injury, hearing loss, inhalation of toxic fumes, and burns. This protective equipment includes but is not limited to:

- Protective eye wear and hearing protection.

Component Identification

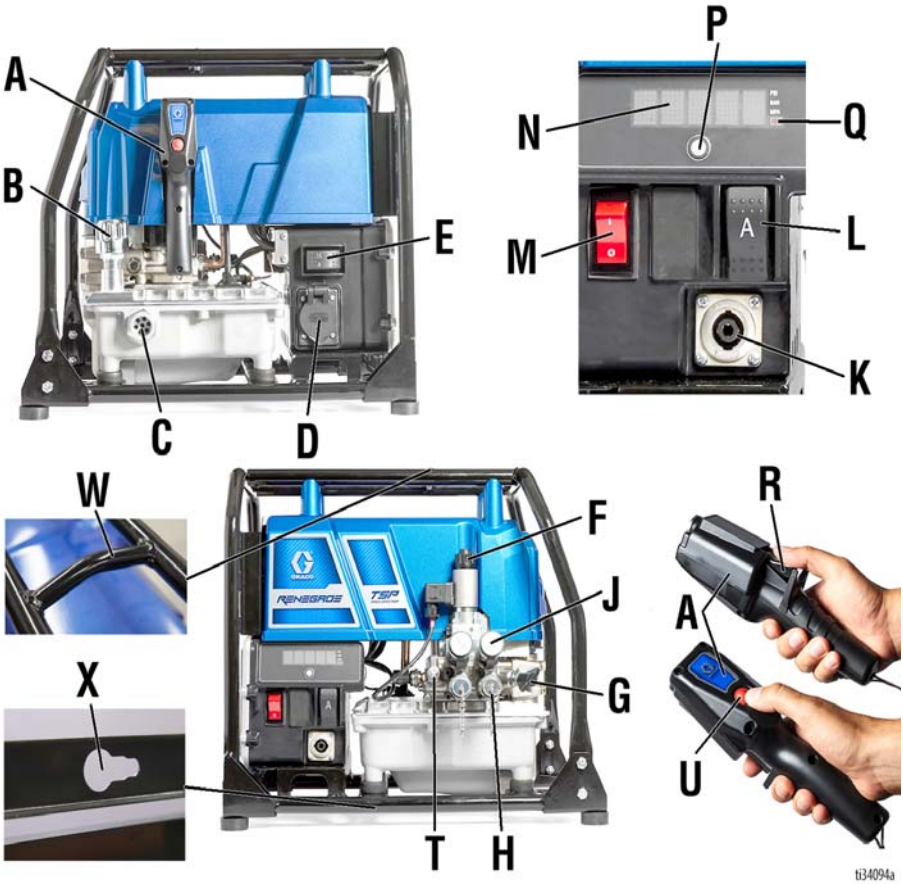

A	Pendant
B	Oil Fill Cap (Breather)
C	Oil Level Sight
D	Electrical Inlet
E	15/20A Switch (120V only)
F	Pressure Relief Button
G	Pressure Setting Valve
H	Hose Connection – Advance
J	Hose Connection – Return
K	Pendant Connector

L	Manual Advance Switch
M	On/Off Switch
N	Display
P	Display Button
Q	Wireless Remote Signal Indicator
R	Pendant Advance Switch
T	Pressure Gauge Port
U	Pump Stop Switch
W	Lift Point
X	Pump Rod Puller

Controls and Indicators

Item	Description
On/Off Switch	Turns TSP power pack on or off.
15A/20A Switch (120V only)	Sets TSP power pack to either 15A or 20A. Select setting based on your circuit rating. Select 20A when a 20A circuit is available. Using the 20A setting provides the maximum performance. Select 15A when a 15A circuit is available.
Pressure Setting Valve	Controls pressure at the tool. Turn clockwise to increase pressure.
Pressure Relief Button	Relieves pressure in the system (pressure goes to zero).
Manual Advance Switch or Pendant Advance Switch	Activates pump to advance the tool when pressed.
Display	Shows pressure and other control information.
Display Button	Cycles Display through display information.
Pendant Pump Stop Switch	Stops pump early if pump stop is needed.

Grounding

The equipment must be grounded to reduce the risk of electric shock. Improper grounding can cause electric shock. Grounding provides an escape wire for the electric current.

All electrical wiring must be done by a qualified electrician and comply with all local codes and regulations.

Power Requirements

100-120 VAC, 50/60 Hz, 15A/20A, single phase.

220-240 VAC, 50/60 Hz, 10A, single phase.

Extension Cords

Use a 3-wire extension cord with an undamaged ground contact.

Use a 3-wire, 12 AWG (2.5 mm^2) minimum extension cord. Longer cords and higher gauge cords reduce performance.

The plug must be plugged into an outlet that is properly installed and grounded in accordance with all local codes and regulations.

Do not modify plug! If it will not fit in outlet, have grounded outlet installed by a qualified electrician. Do not use an adapter.

Pressure Relief Procedure

Follow the Pressure Relief Procedure whenever you see this symbol.

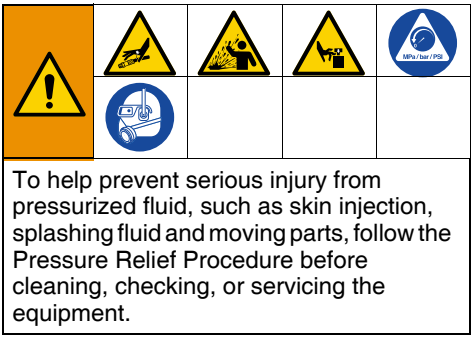

To help prevent serious injury from pressurized fluid, such as skin injection, splashing fluid and moving parts, follow the Pressure Relief Procedure before cleaning, checking, or servicing the equipment.

NOTE: The TSP power pack is designed to automatically relieve pressure when the pump motor stops.

1. Verify displayed pressure goes to zero when motor stops.
2. If pressure is not zero, then press Pressure Relief Button.

3. Verify pressure has dropped to zero.
4. If you suspect that pressure has not been fully relieved, rotate the Pressure Setting Valve counterclockwise until rotation stops.

Setup

Pendant Setup

Corded Pendant

Attach Corded Pendant by lining up the tab on the plug with the socket located on the power pack control. Insert the plug and turn clockwise until you hear the lock click. The Corded Pendant must be selected to be the active control, see **Select Control Device** page 17.

Wireless Pendant

The Wireless Pendant must be selected to be the active control. See **Select Control Device** page 17.

Fill Oil Tank

Unit is shipped without hydraulic oil. Before the first use, fill tank with hydraulic oil, see **Recommended Oil Temperature Ranges for Various Hydraulic Oil Weights** page 52.

1. Remove Oil Fill Cap.
2. Add hydraulic oil until oil is visible at the top of the Sight Glass.

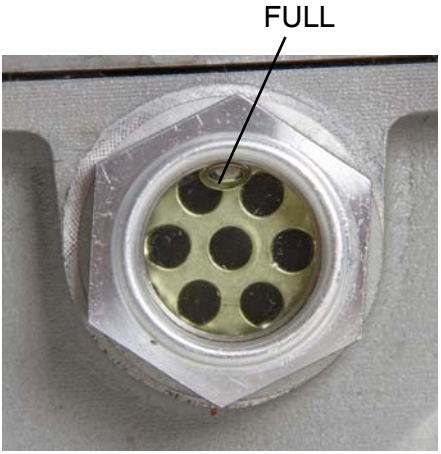

3. Replace Oil Fill Cap.

Modes

The TSP power pack has three modes: **prime**, **calibration**, and **operation**.

The **prime** mode removes air from the pump.

The **calibration** mode calibrates the pressure sensor. See **Calibration Procedure** page 28.

The **operation** mode is the normal mode in which the TSP power pack is ready to torque bolts.

Prime TSP Power Pack Procedure

Priming is required after initial oil fill or pump replacement. Unit may also require priming when displayed control pressure reading fluctuates continuously.

1. Disconnect hoses, if attached.
2. Plug in TSP power pack.
3. Turn ON/OFF switch to **ON** position.
4. Turn Pressure Setting Valve counterclockwise until rotation stops. This is the zero pressure setting.

5. Cycle through primary menu by short pressing the control Display Button until **PRIME** appears on Display.

High-pressure leaks are able to inject oil into the body and cause serious bodily injury. Do not stop leaks with hand or rag.

6. Press the Advance Switch on selected control device to start prime mode. **90** will appear on the Display and will count down in seconds as the prime procedure automatically occurs.

NOTE: Press Display Button or Pump Stop Switch any time while in prime mode to cancel the procedure.

NOTE: TSP power pack will automatically return to operation mode when prime procedure is complete.

7. To ensure the TSP power pack is primed, set pressure to 8000 psi and press the Advance Switch on selected control device. The Display pressure reading should be steady at 8000 +/- 50 psi. If pressure fluctuations are 100 psi or greater, the **Prime TSP Power Pack Procedure** should be repeated.
8. Inspect for leaks. If leaking occurs, tighten all fittings and repeat the **Prime TSP Power Pack Procedure**.
9. Check hydraulic fluid level.

Connect Hose and Tool

The TSP power pack uses flush-face quick-release couplings that are durable and easy to clean. To connect hose and tool, follow the steps below.

1. Wipe the mating surfaces of the couplings on the TSP power pack and the hoses with a clean rag before making connection.
2. Connect the hoses from the TSP power pack to the hydraulic tool.

NOTE: When making connections, do not over stretch the hoses or bend hoses at a sharp angle.

Hose Prime Procedure

Prime and flush the hoses each time a hose is replaced or when swapping tools. Continuous use of a hose and tool combination should not require a prime and flush procedure unless the hoses lose oil.

1. Turn ON/OFF switch to **OFF** position.
2. Connect hoses to the manifold on the TSP power pack.
3. Connect hoses together at tool end of the hose.
4. Turn ON/OFF switch to **ON** position.
5. Set pressure control to minimum pressure.
6. Run the TSP power pack for 30 seconds to purge the air from the hoses.
7. Check hydraulic oil level. Fluid level should be at the top of the oil level sight glass. Add oil as needed.

Operation

FIRE AND EXPLOSION WARNING
To avoid serious injury, do not use in explosive atmospheres or hazardous (classified) locations.

High pressure leaks are able to inject oil into the body and cause serious bodily injury. Before each use, inspect hydraulic lines, fittings, and hoses for breaks, cracks, worn spots, bulges, kinks and any other damage. Replace damaged lines, fittings, or hoses immediately. Never attempt to repair the damaged parts.

1. Determine desired torque for your application (nut or bolt specifications based on the specific project recommendations or standards required).
2. Determine desired pump pressure by referencing wrench specifications for torque and pressure.
3. Connect hoses and wrench to TSP power pack. Only use hoses and wrenches rated at a minimum of 10,000 psi (68.9 MPa, 700 bar).
4. Plug extension cord into TSP power pack.

AMPUTATION OR CRUSH HAZARD
Unexpected pump activation can cause serious injury. Ensure hands are clear of wrench crush points when activating TSP power pack.

5. Turn ON/OFF switch to **ON** position.

High-pressure leaks are able to inject oil into the body and cause serious bodily injury. Do not stop leaks with hand or rag.

6. Activate TSP power pack with the selected control device; see **Select Control Device** page 17. While holding Advance Switch, adjust Pressure Setting Valve until desired pump pressure is shown on Display or gauge.

NOTE: Inspect for leaks. If leaking occurs, tighten all fittings and repeat the **Prime TSP Power Pack Procedure** page 12.

7. Attach wrench to nut or bolt per wrench manufacturer's specifications.
8. Activate TSP power pack by pressing and holding Advance Switch until end of wrench stroke. End of stroke is indicated either by the wrench, the pack pressure rising rapidly, the nut stopping, or some combination of these factors.
9. Release Advance Switch and wrench will automatically return.
10. Repeat steps 8 and 9 until job is complete.

Shut Down

1. Turn ON/OFF switch to **OFF** position. Unplug the TSP power pack.
2. Disconnect hoses from TSP power pack.

Cleaning

Proper care and maintenance is recommended for best experience with the TSP power pack. For proper maintenance activity and intervals, see **Maintenance** page 19.

To clean, wipe TSP power pack and hoses with a rag to remove any accumulated oil and dirt after every use.

Wash TSP power pack with mild soap and water as needed. High pressure washing is not recommended.

Display

Main Menu Operation

1. Turn power **ON**. Display will show ★★★★★ as unit powers on.

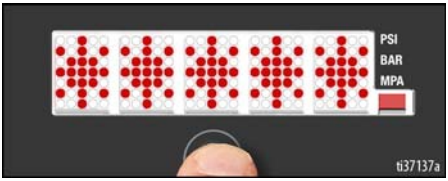

2. Once powered on, Display will show **PRESSURE** (in PSI, bar, or MPa - as selected). Refer to **Change Display Units** page 17.

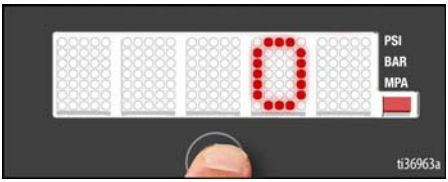

3. Short press Display Button and **SET HOURS** will scroll past on screen.

NOTE: SET HOURS is a resettable hour meter that may be used to monitor oil change intervals.

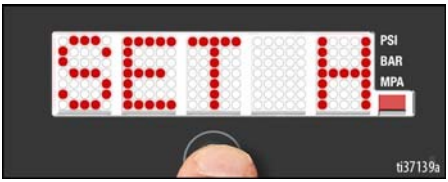

   a. Press and hold Display Button to reset hours to 0.

4. Short press Display Button and **LIFETIME HOURS** will scroll past on screen.

NOTE: LIFETIME HOURS displays a lifetime hour meter and cannot be reset.

5. Short press Display Button and name of the selected control device will scroll past on screen. If no control device is selected, **SELECT CONTROL DEVICE** will scroll past on screen.

   a. Press and hold Display Button to select control device. Refer to **Select Control Device** page 17.

6. Short press Display Button and **PRIME** will scroll past on screen.

   a. Press and Hold Display Button to enter prime mode. Refer to **Prime TSP Power Pack Procedure** page 12.

7. Short press Display Button to return to **PRESSURE** screen.

Change Display Units

NOTE: To change display units you must be in the pressure screen with the pressure display at zero.

1. Press and hold the Display Button for 5 seconds to change pressure units (psi, bar, MPa) to desired units. Selection of bar or MPa changes gallons to liters x 10.

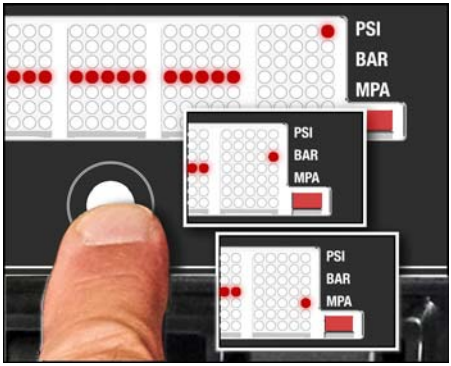

Select Control Device

1. Short press Display Button three times to move to **SELECT CONTROL DEVICE** mode.

2. Press the Advance Switch on desired control device to select it. Options available are:
   a. Manual Advance Switch.
   b. Corded Pendant.
   c. Wireless Pendant.

NOTE: The TSP power pack may be paired with only one control at any time. Any previously selected devices will be ignored when a new device is selected.

Secondary Menu (Stored Data)

NOTE: Secondary Menu contains the calibration procedure plus information that may be useful during troubleshooting or repair.

1. To enter Secondary Menu turn power switch on while holding Display Button. Continue to hold Display Button until **CALIBRATE** appears.

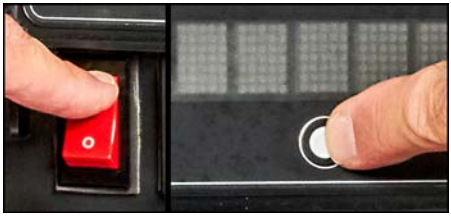

2. **CALIBRATE** scrolls past on the Display.

   a. Press and hold button to enter **CALIBRATION** mode. Refer to **Calibration Procedure** page 28 for calibration instructions.

3. Short press Display Button and **SERIAL NUMBER** scrolls past on the Display.

4. Short press Display Button and **SOFTWARE REVISION** scrolls past on the Display.

5. Short press Display Button and **LAST CODE** scrolls past on the Display.

   a. Press and hold Display Button and **CLEAR** will appear for three seconds on the Display. **NO CODE STORED** will then scroll past on the Display.

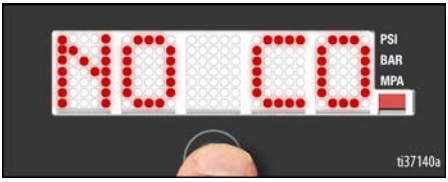

   b. Short press Display Button to return to the **CALIBRATE** screen.

Maintenance

Routine maintenance is important to ensure proper operation of your TSP power pack. Maintenance includes performing routine actions that keep your TSP power pack in operation and prevent trouble in the future.

Activity	Interval
Inspect pump, hoses, and tools for damage or leaks.	Daily.
Inspect fan opening for blockage.	Daily.
Pressure calibration.	Per company, customer, or job specification.
Change hydraulic oil.	40 motor hours.

Recycling and Disposal at End of Life

At the end of the product's useful life, dismantle and recycle it in a responsible manner.

Preparation:

- Perform the **Pressure Relief Procedure**, page 10.
- Drain and dispose of fluids according to applicable regulations. Refer to the material manufacturer's Safety Data Sheet.

Dismantle and recycle:

- Remove motors, circuit boards, displays, and other electronic components. Remove the battery from the wireless pendant. Recycle according to applicable regulations.
- Do not dispose of electronic components with household or commercial waste.

- Deliver remaining product to a recycling facility.

Troubleshooting

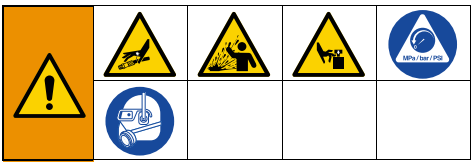

1. Follow **Pressure Relief Procedure** page 10, before troubleshooting or repairing TSP power pack.
2. Check all possible problems and causes before disassembling TSP power pack.

Problem	Cause	Solution
Unit does not start when plugged in and power switch is “ON”.	Extension cord. Check extension cord continuity with ohmmeter.	Replace extension cord.
	Low Voltage. Meter must read: 85-130 VAC (120V),. Meter must read: 170-260 VAC (240V).	Reset circuit breaker. Try another outlet. Use a heavier gauge extension cord.
Motor stops under load.	Low Voltage.	Reset circuit breaker, if tripped. Turn off other electric loads. Use a heavier gauge extension cord.
	Circuit breaker has tripped.	Reset circuit breaker.
		Make certain that the 15A/20A Switch is set to the correct position for the circuit that the unit is plugged in to (120V only).
Blowing circuit breakers.	Pump is exceeding circuit breaker rating.	Set 15A/20A Switch to 15A setting (120V only).
Motor runs but unit will not pump oil.	Pump is not primed.	Perform **Prime TSP Power Pack Procedure** page 12.
	Low hydraulic oil level.	Add oil see, **Fill Oil Tank** page 11.
Pump does not reach full pressure.	Bad transducer.	Test with gauge on gauge port to very. Replace transducer, see **Transducer Replacement** page 37.
	High-pressure pump issue.	Replace high-pressure pump. see **Pump Replacement** page 30.
	Pressure set valve issue.	Replace pressure set valve, see **Pressure Set Valve Replacement** page 33.
	High-pressure relief valve issue.	Replace high-pressure relief valve, see **Pressure Relief Valve Replacement (1,500 and 12,000 PSI)** page 33.
	4-way valve issue.	Replace 4-way valve, see **4-Way Valve Replacement** page 34.
Pump stalls at ~4500 psi.	Poppet valve not functioning properly.	Replace poppet valve, see **2-Way, Poppet Valve Replacement** page 32.

Problem	Cause	Solution
Maximum pressure is ~3,300 psi.	High pressure pump issue.	Replace high pressure pump, see **Pump Replacement** page 30.
Unit runs slow.	Air in hydraulic system.	Check oil level and fill as needed. Perform **Prime TSP Power Pack Procedure** page 12 and **Hose Prime Procedure** page 13.
	Unit set to 15A setting (120V only).	Connect to a 20 Amp circuit and set switch to 20A setting.
	Hose connection filter plugged.	Switch hose connection to other connectors. Replace filter fitting as needed.
	Hi-flow pump issue.	Replace hi-flow pump, see **Pump Replacement** page 30.
	High pressure pump issue.	Replace high pressure pump, see **Pump Replacement** page 30.
	4-way valve issue.	Replace 4-way valve, see **4-Way Valve Replacement** page 34.
Unit builds full pressure, but torque wrench fails to advance.	Torque is greater than wrench capacity at full pressure.	Use a torque wrench with a larger capacity.
	Advance flow line to wrench is restricted or blocked.	Check hose couplers for full engagement.
Torque wrench fails to retract.	Return flow from wrench is restricted or blocked.	Check hose couplers for full engagement.
Pressure indicator does not read zero (0) psi/bar when pump is stopped.	Pressure not relieved.	Perform **Pressure Relief Procedure** page 10.
	Pressure indicator or gauge is out of calibration.	Replace pressure transducer or recalibrate with **Calibration Procedure** page 28.
TSP power pack does not run at all. Display shows **CODE 03.** 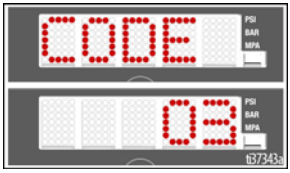	Transducer connection issue (control board is not detecting a pressure signal).	1. Set TSP power pack to OFF and disconnect power to TSP power pack. 2. Check transducer connection. 3. Disconnect transducer from connector. Check to see if transducer contacts are clean and secure. 4. Reconnect transducer and connector. Connect power, turn TSP power pack ON and press Advance Switch. If TSP power pack does not run, set TSP power pack to OFF and proceed to next step. 5. Connect a confirmed working transducer to transducer connector. 6. Turn TSP power pack ON and press Advance Switch. If TSP power pack runs, install new transducer. Replace control board if TSP power pack does not run.

Problem	Cause	Solution
TSP power pack does not run at all. Display shows **CODE 04.** 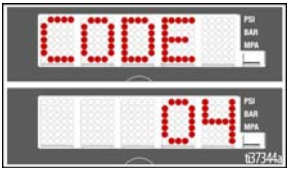	Control board detected voltage surges.	1. Set TSP power pack to OFF and disconnect power to TSP power pack. 2. Locate a good voltage supply to prevent damage to electronics.
TSP power pack does not run at all. Display shows **CODE 05.** 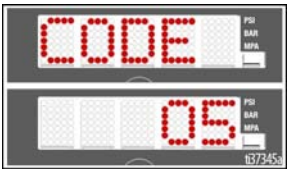	Control is commanding motor to run, but motor shaft does not rotate.	1. Remove pumps and try to run TSP power pack. If motor runs, check for locked or frozen pump or drive train. If TSP power pack does not run, continue to step 2. 2. Set TSP power pack to OFF and disconnect power to TSP power pack. 3. Remove top half of shroud frame and shroud. 4. Set TSP power pack to OFF and spin pump crank 1/2 turn. Restart TSP power pack. If TSP power pack runs, replace control board. If TSP power pack does not run, continue to step 5. 5. Set TSP power pack to OFF and disconnect power to TSP power pack. 6. Open control box by removing 8 screws that attach control assembly to control box. Locate motor connector (large 6-pin connector) and disconnect. 7. **Perform Spin Test:** Test at large 6-pin motor field connector. Test motor by placing a jumper across pins 1 & 2. Rotate motor fan at about 2 revolutions per second. A cogging resistance to motion should be felt at the crank. The motor should be replaced if no resistance is felt. Repeat for pin combinations 1 & 3 and 2 & 3. Pin 4 (the green wire) is not used in this test. If all spin test is positive, continue to step 6 (see connections below).

Problem	Cause	Solution
		STEP 1 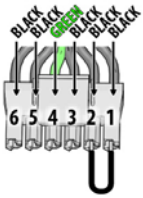 STEP 2 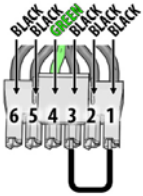 STEP 3 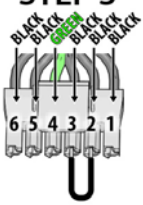

Problem	Cause	Solution
TSP power pack does not run at all. Display shows **CODE 05.** 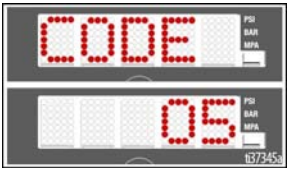	Control is commanding motor to run, but motor shaft does not rotate.	8. **Perform Field Short Test:** Test at large 6-pin motor field connector. There should not be continuity from pin 4, the ground wire, and any of the remaining pins. If motor field connector tests fail, replace motor. 9. **Check Motor Thermal Switch:** Unplug thermal wires. Set meter to ohms. Meter should reach the proper resistance across pins 5 & 6. 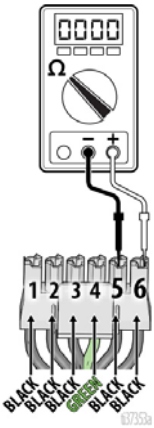 **Resistance Table:** TSP Power Pack: 0 ohms

Problem	Cause	Solution
TSP power pack does not run at all. Display shows **CODE 06.** 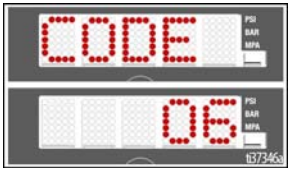	Motor overheated.	**Note:** Motor must be cooled down for the test. 1. Keep TSP power pack in cooler location with good ventilation. Make sure motor air intake is not blocked. 2. Set TSP power pack to OFF and disconnect power to TSP power pack. 3. Open control box by removing 8 screws that attach control assembly to control box. 4. Check thermal switch inside control box. 5. Disconnect 6-pin connector. Make sure contacts are clean and secure. Measure resistance of the thermal switch (thermal switch is across pins 5 & 6). If reading is not correct, replace motor. 6. **Check Motor Thermal Switch:** Unplug thermal wires. Set meter to ohms. Meter should reach the proper resistance across pins 5 & 6. 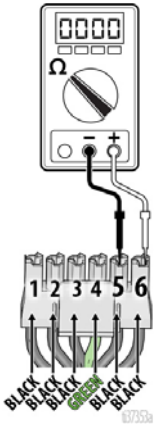 **Resistance Table:** TSP Power Pack: 0 ohms 7. Reconnect 6-pin connector. Connect power, turn TSP power pack ON and press Advance Switch. If TSP power pack does not run, replace control board.

Problem	Cause	Solution
TSP power pack does not run at all. Display shows **CODE 08.** 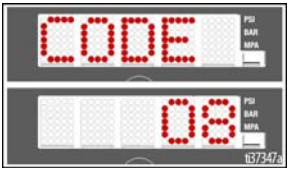	Incoming voltage too low for TSP power pack operation.	1. Set TSP power pack to OFF and disconnect power to TSP power pack. 2. Remove other equipment that uses the same circuit. 3. Locate a good voltage supply to avoid damage to electronics.
TSP power pack does not run at all. Display shows **CODE 10.** 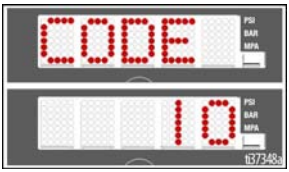	Control board is over heating.	1. Make sure motor air intake is not blocked. 2. Make sure fan is securely attached to motor shaft. 3. Replace control board. 4. Replace motor.
TSP power pack does not run at all. Display shows **CODE 12.** 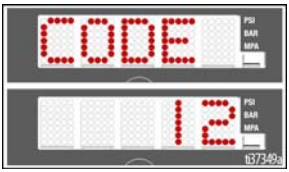	Excessive current protection enabled.	Cycle power on and off.
TSP power pack does not run at all. Display shows **CODE 15.** 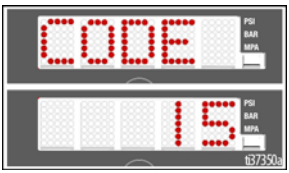	Motor not spinning (no current to motor).	1. Set TSP power pack to OFF and disconnect power to TSP power pack. 2. Remove top half of shroud frame and shroud. 3. Set TSP power pack to OFF and spin pump crank 1/2 turn. Restart TSP power pack. If TSP power pack runs, replace control board. If TSP power pack does not run, continue to step 5. 4. Turn power on. If code continues, replace control board.

Problem	Cause	Solution
TSP power pack does not run at all. Display shows **CODE 16.** 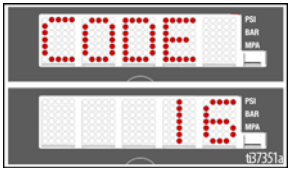	Motor position sensor not working.	1. Set TSP power pack to OFF and disconnect power to TSP power pack. 2. Open control box by removing 8 screws that attach control assembly to control box. 3. Disconnect motor position sensors and inspect for damage at connectors. 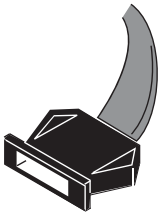 4. Reconnect sensor. 5. Turn power ON. If code continues, replace motor.
TSP power pack does not run at all. Display shows **CODE 17.** 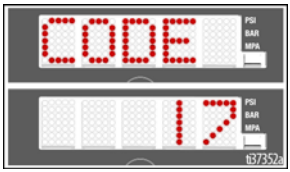	TSP power pack plugged into wrong voltage.	1. Set TSP power pack to OFF and disconnect power to TSP power pack. 2. Locate a good voltage supply to avoid damage to electronics.

Repair

Calibration Procedure

The TSP power pack should be re-calibrated after replacing the transducer or control assembly. The TSP power pack should also be re-calibrated as needed based on your company's business practices and if you suspect the TSP power pack is not operating correctly.

NOTE: This procedure requires the use of a high precision calibration gauge or data acquisition system to be used as a calibration standard. It is recommended to leave hoses attached to the TSP power pack while calibrating.

1. Connect the calibration high precision gauge or data acquisition system to the pressure gauge port or one of the advance ports of the hose distribution manifold.
2. Power up the TSP power pack, but do not press the Advance Switch.
3. Make sure that the pressure set valve is fully relieved and all pressure in the TSP power pack is relieved; see **Pressure Relief Procedure**, page 10. There should be zero pressure in the TSP power pack.
4. Enter the secondary menu, see **Secondary Menu (Stored Data)** page 18.

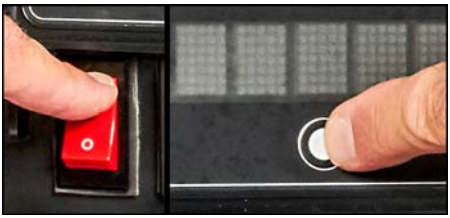

5. **CALIBRATE** scrolls on the Display.

6. Press and hold the Display Button for a few seconds to start the calibration procedure. Calibration mode has been entered when **RUN TO 8000 PSI PRESS DISPLAY BUTTON TO SAVE** scrolls on the Display.

7. Press the TSP power pack Advance Switch. Set pressure to 8000 psi per the calibration gauge or data acquisition system. While keeping the power pack running at 8000 psi, press the Display Button to lock in the 8000 psi value for the controller.

NOTE: If calibration procedure is successful, **DONE** will display on the screen for three seconds, and then pack will return to normal operation mode.

NOTE: If the calibration procedure was unsuccessful, the following message will scroll on the Display: **CALIBRATION FAILED**. Press Display Button to continue. Perform **Pressure Relief Procedure** page 10, then cycle power to the TSP power pack and retry calibration procedure.

NOTE: If calibration procedure is never successful, replace pressure transducer; see **Transducer Replacement** page 37.

Pump Replacement

Tools Required: 13 mm wrench.

Pump Removal

(High flow displacement pump shown)

Pump removal includes disassembling the pump guard and pump bolts and removing the pump.

1. Perform **Pressure Relief Procedure**, page 10 and disconnect power to the TSP power pack. Tilt unit 90 degrees backwards to keep oil from running out when pump is removed.

2. Remove the pump guard (50) and retaining bolt (43).

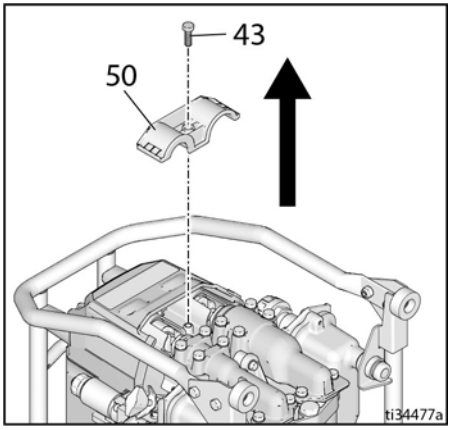

3. Remove pump bolts (qty 6).

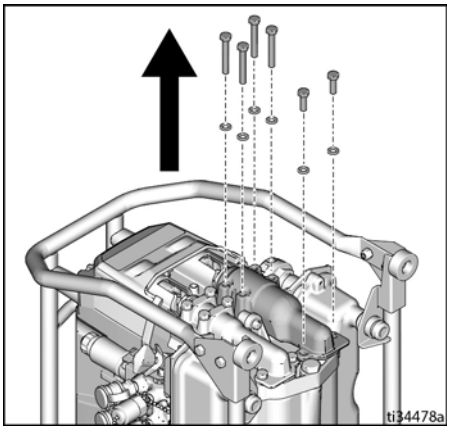

4. Slowly slide pump out of the drive housing. Allow filter to drain into reservoir during removal.

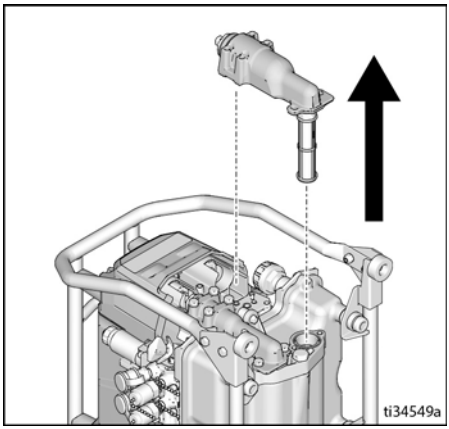

Pump Installation

(High flow displacement pump shown)

Pump installation includes securing the pump and connecting to the fluid inlet and outlet.

1. Install pump tank o-ring and manifold seals.

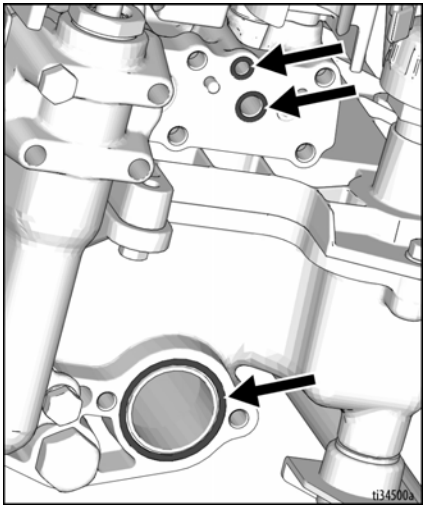

2. Slide pump assembly into drive housing while ensuring the piston rod head is properly aligned in the assembly housing.

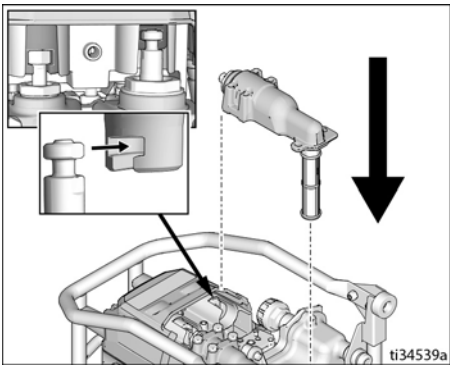

NOTICE

Failure to properly align piston rod head into housing during reassembly could severely damage the TSP power pack during operation.

NOTE: Adjust pump rod length with pump rod puller if needed.

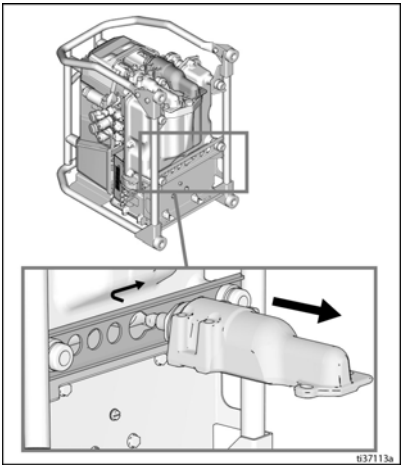

3. Attach pump housing to manifold with four screws and flat washers. Torque screws to 50-70 in-lbs. (5.6-7.9 N•m).

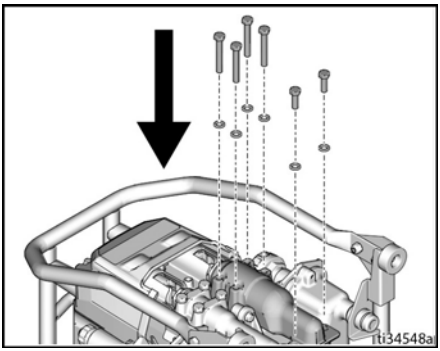

4. Attach pump housing to reservoir with two screws and flat washers. Torque to 20-25 ft-lbs (27.1-33.4 N•m).
5. Replace pump guard (50) with retaining bolt (43).

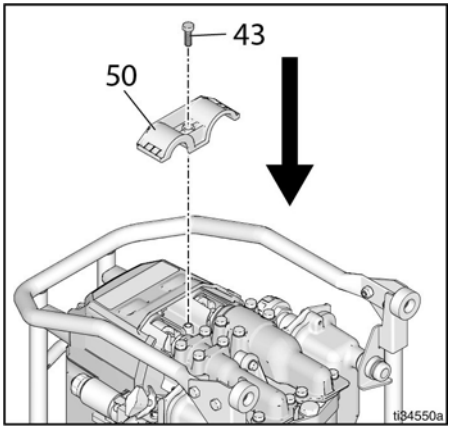

2-Way, Poppet Valve Replacement

Tools Required: Phillips screwdriver, 7/8 in. wrench, 3/4 in. wrench.

1. Perform **Pressure Relief Procedure**, page 10 and disconnect power to the TSP power pack.
2. Remove top half of frame and shroud.

3. Completely loosen Phillips screw from terminal. Remove the terminal.

4. Remove top 3/4 in. top retaining nut and discard.

5. Lift the black solenoid to gain clearance to the 7/8 in. hex on the body of the poppet valve. Loosen and remove.

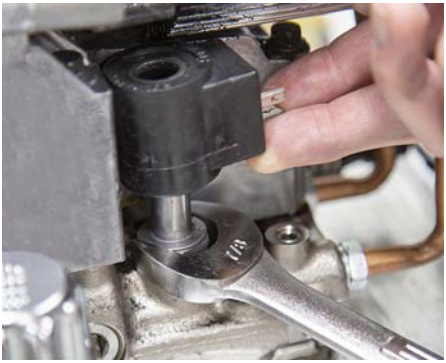

6. Install new solenoid valve without the new 3/4 in. top retaining nut.
7. Torque the 7/8 in. hex to 19-21 ft. lbs (25.8-28.5 N•m).
8. Reinstall the top 3/4 in. retaining nut, torque to 4-5 ft. lbs (5.4-6.8 N•m).
9. Reconnect the terminal and tighten Phillips head screw.

10. Reinstall shroud and top half of frame.

Pressure Set Valve Replacement

Tools Required: 1-1/16 in. wrench.

1. Perform **Pressure Relief Procedure**, page 10 and disconnect power to the TSP power pack.
2. Use a 1-1/16 in. wrench to loosen.
3. Remove plastic protective cap from new valve. Ensure washer remains on new valve.
4. Screw in new valve by hand. Tighten to 57-61 ft. lb (77.2-82.7 N•m).

Pressure Relief Valve Replacement (1,500 and 12,000 PSI)

Tools Required: 16 mm wrench.

1. Perform **Pressure Relief Procedure**, page 10 and disconnect power to the TSP power pack.
2. Loosen and remove valve with 16 mm wrench.
3. Replace new valve and torque to 50-55 ft. lbs (67.8-74.6 N•m).

1,500 psi relief valve shown

4-Way Valve Replacement

Tools Required: Phillips screwdriver, 5 mm Allen wrench, 10 mm wrench.

Remove 4-Way Valve

1. Perform **Pressure Relief Procedure**, page 10 and disconnect power to the TSP power pack.
2. Remove top half of frame and shroud.

3. Using a Phillips screwdriver, fully loosen retainer screw. Pull plug off from the valve.

4. Remove finger-tight nut on top of valve. Remove coil from valve.

5. Use a 5 mm Allen wrench to remove the four M6 screws that secure the 4-Way Valve to the diverter block. Remove the 4-way valve. Save the M6 screws for reuse later.

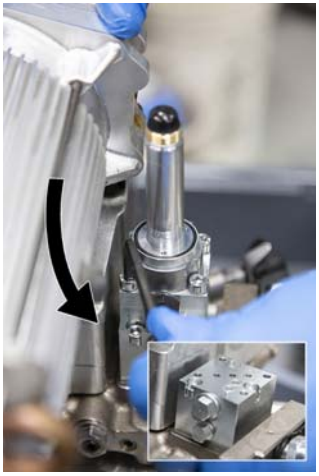

6. Use a 5 mm Allen wrench to remove the three M6 screws that secure the diverter block to the manifold. Remove the diverter block.

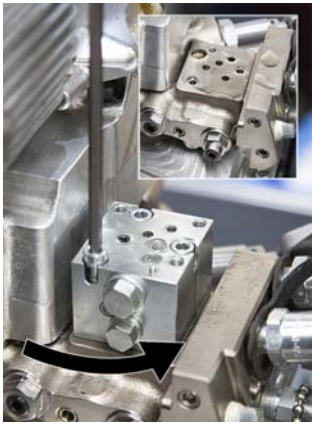

7. Make certain the old o-rings are removed from the manifold.

NOTICE

Failure to remove existing o-rings from manifold could result in equipment damage if multiple o-rings are re-installed into the valve manifold upon reassembly.

Install 4-Way Valve

1. Remove finger-tight nut on top of new valve. Remove coil from new valve.
2. Using a 5 mm Allen wrench, carefully separate the 4-way valve from the diverter block. Ensure o-rings remain in place on 4-way valve. Set valve aside on a clean surface.
3. To remove the protective cover from the bottom of the diverter block remove the three hex nuts. Dispose of the three hex nuts and protective cover.

4. Ensure new o-rings are installed in diverter block and remain in place. Position diverter block on the manifold. Align the three screws in the diverter block with the corresponding holes in the manifold. Secure with the three M6 screws. Torque to 6-8 ft-lbs (8.1-10.8 N•m).

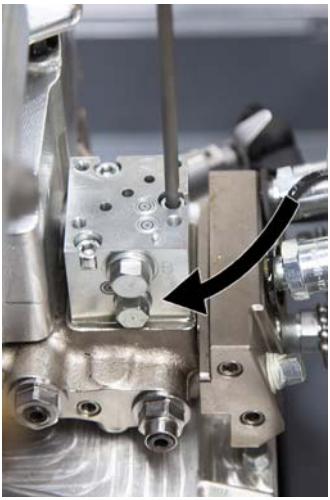

5. Reattach coil on to valve. Tighten plastic nut finger-tight to top of valve.

6. Position the 4-way valve on the diverter block, it will only fit in one position. Secure with the four M6 screws. Torque to 6-8 ft-lbs (8.1-10.8 N•m).

7. Remove and dispose of plastic cover over the plug on the terminal of new valve.

8. Attach wire harness into terminal on 4-way valve, secure by tightening the retaining screw.

Transducer Replacement

Tools Required: 15/16 in. wrench.

Remove Transducer

1. Perform **Pressure Relief Procedure** page 10 and disconnect power to the TSP power pack.
2. Lift connector locking tab on transducer electrical connector.

3. Unplug electrical connector from transducer.
4. Use 15/16 in. wrench to remove transducer from the manifold.

Install Transducer

1. Apply sealant to transducer threads.
2. Start threading transducer into the manifold.
3. Using a 15/16 in. socket, tighten transducer to 50-55 ft-lbs (68.8-75.6 N•m).
4. Plug electrical connector into the transducer.
5. Verify proper operation and inspect for leaks. If leaks are found, stop unit and re-torque transducer.
6. Perform **Calibration Procedure** page 28.

Pendant Battery Replacement

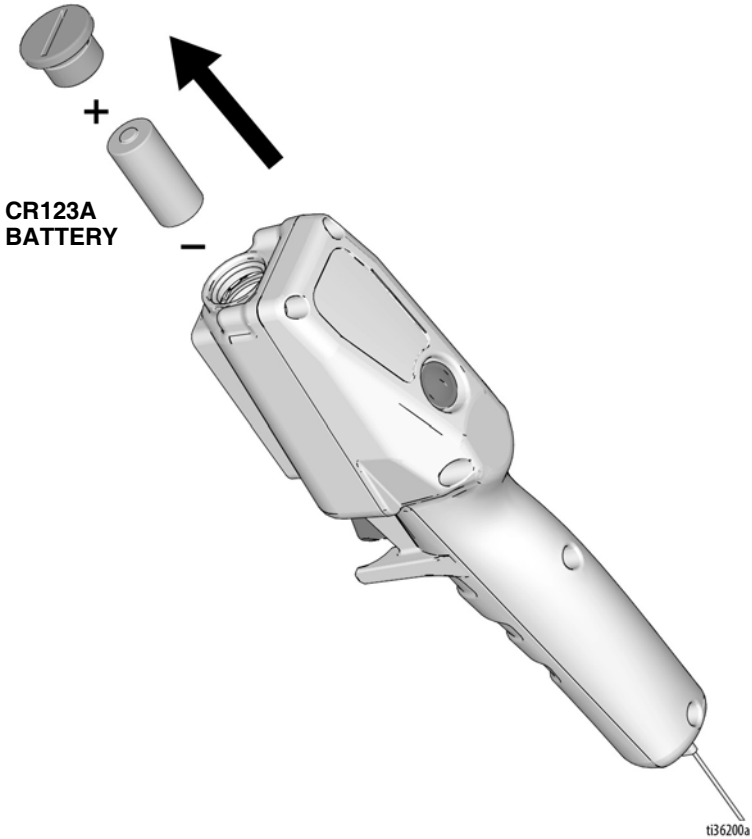

Hydraulic Schematic

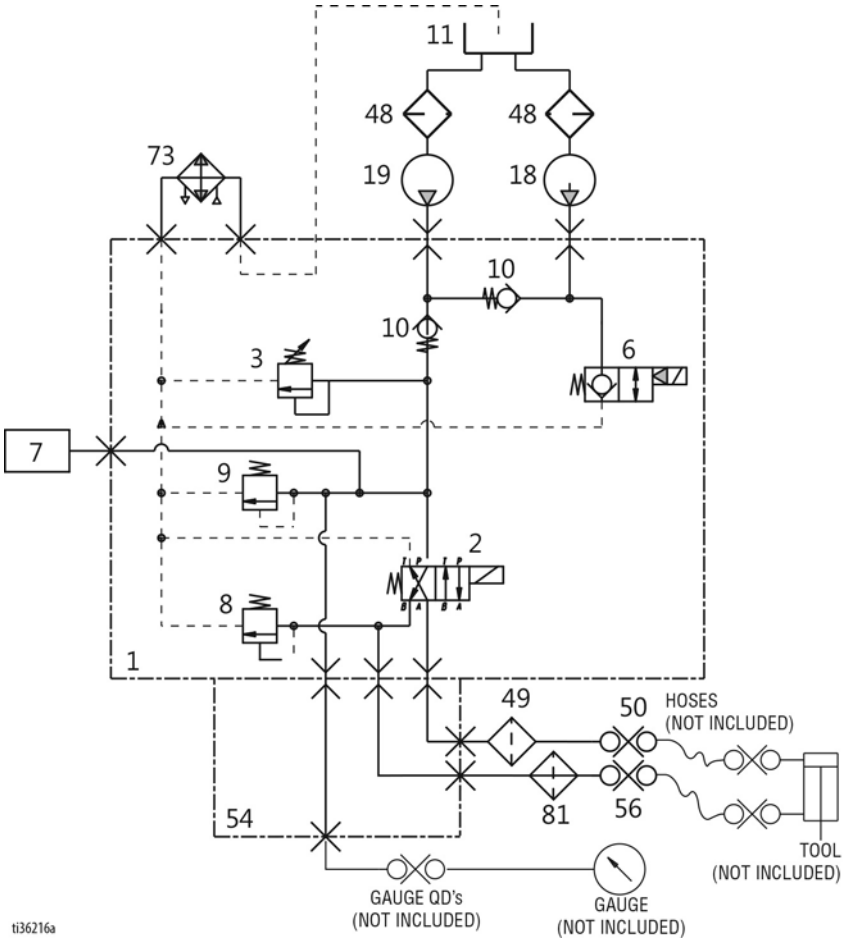

Ref	Part	Description	Ref	Part	Description
1	19Y114	KIT, repair, manifold	19	19Y104	PUMP, high pressure
2	19Y107	KIT, valve, 4-way, directional	48	195695	FILTER, fluid
3	19Y110	KIT, valve, manual pressure set	49	19Y214	FITTING, filter, 1/4 NPT male
6	19Y353	VALVE, 2-way, poppet	50	17U673	FITTING, QD, male, high pressure
7	19Y108	KIT, transducer, high pressure	54	19Y113	KIT, manifold, distribution
8	17U675	VALVE, pressure relief, 1500 psi	56	17U671	FITTING, QD, female, high pressure
9	17U685	VALVE, pressure relief, 12000 psi	73	17U696	COOLER, oil
10	17Z470*	VALVE, check, high pressure	81	19Y215	FITTING, filter, 1/4 NPT female
11	17U703	RESERVOIR, machined			
18	19Y106	PUMP, high flow			

** Included in kit 19Y114*

Wiring Diagram - 120V

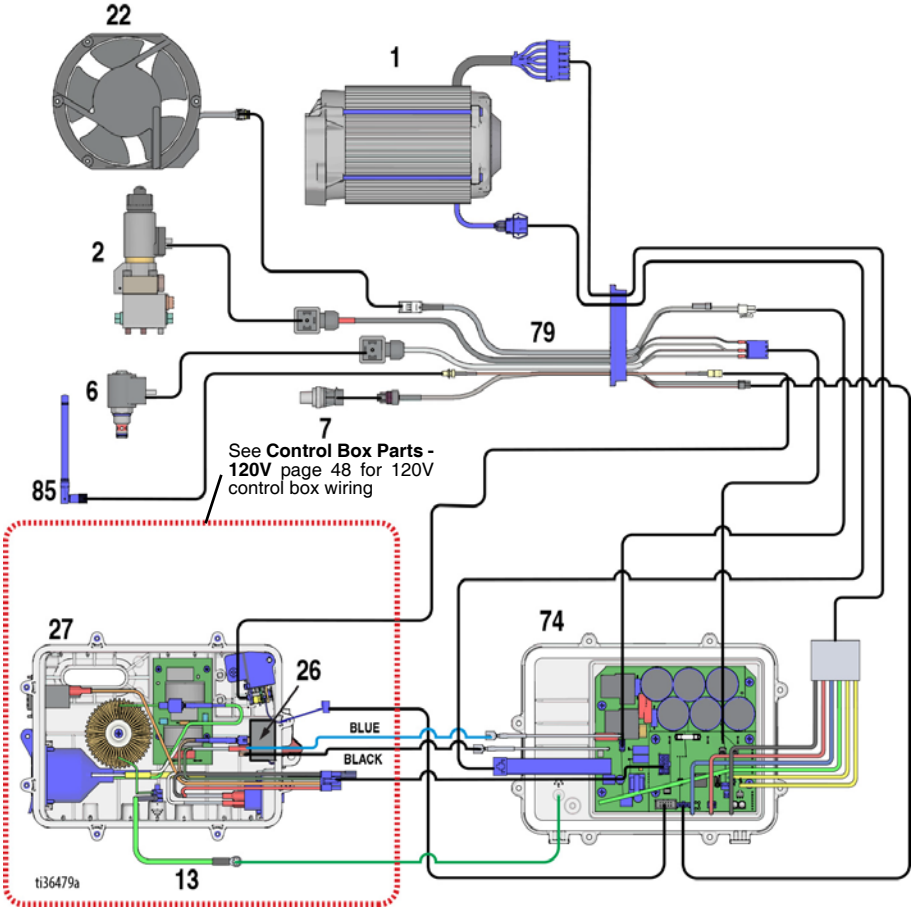

Ref	Part	Description	Ref	Part	Description
1	19Y111	KIT, motor, hydraulic power pack	26	120660	SWITCH, rocker
2	19Y107	KIT, valve, 4-way, directional	27	17U610	BOX, control (120V)
6	19Y353	VALVE, 2-way, poppet	74	19Y115	ASSEMBLY, control
7	19Y108	KIT, transducer, high pressure	79	17U625	HARNESS, main, w/ strain relief
13	17S588	WIRE, green, 16 AWG 8”, #10, serrated	85	17U743	ANTENNA, RF
22	17U721	FAN, oil cooler (120V)			

Wiring Diagram - 230V

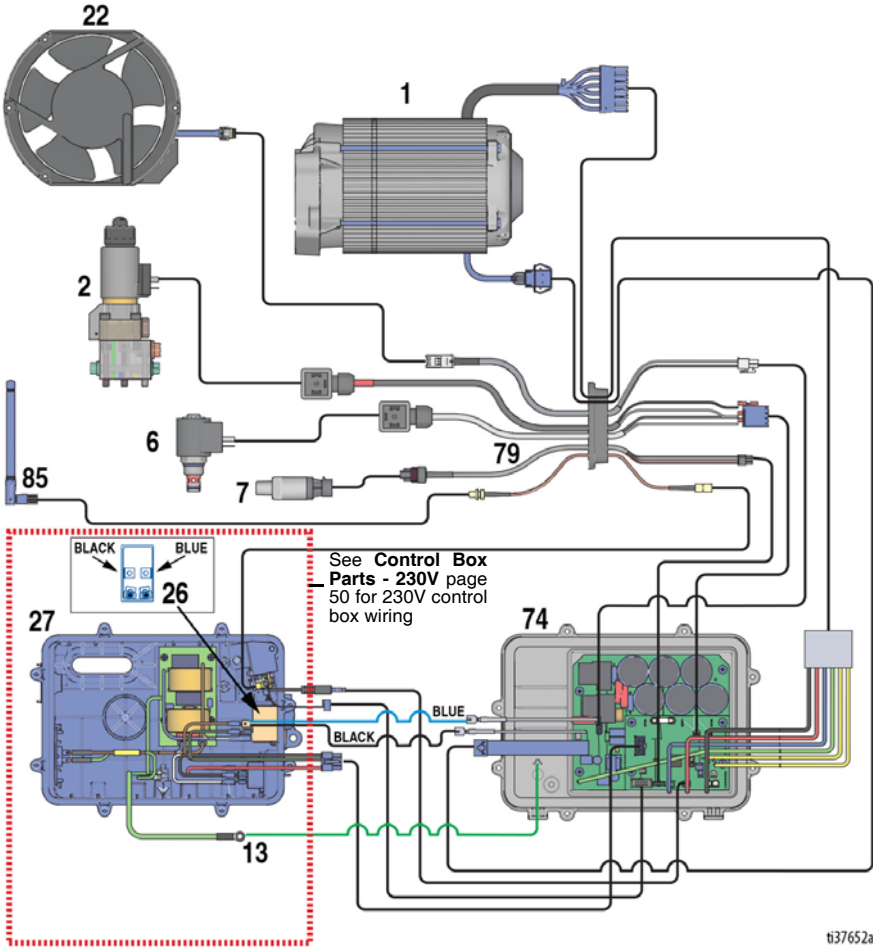

Ref	Part	Description	Ref	Part	Description
1	19Y111	KIT, motor, hydraulic power pack	26	120660	SWITCH, rocker
2	19Y107	KIT, valve, 4-way, directional	27	17U629	BOX, control (230V)
6	17U666	Valve, 2-way, poppet	74	19Y115	ASSEMBLY, control
7	19Y10	KIT, transducer, high pressure	79	17U625	HARNESS, main, w/ strain relief
13	17S588	WIRE, green, 16 AWG 8”, #10, serrated	85	17U743	ANTENNA, RF
22	18B723	FAN, oil cooler (230V)			

Renegade TSP Torque Series Pump Parts

Ref.	Torque	Ref.	Torque	Ref.	Torque
5	20-25 ft-lbs (27.1-33.4 N•m)	13	30-40 in-lbs (3.4-4.5 N•m)	24	110-120 in-lbs (12.4-13.6 N•m)
9	40-45 in-lbs (5.1-6.2 N•m)	19	10-12 in-lbs (1.1-1.4 N•m)		
10	95-105 in-lbs (10.7-11.9 N•m)	21	40-45 in-lbs (4.5-5.1 N•m)		

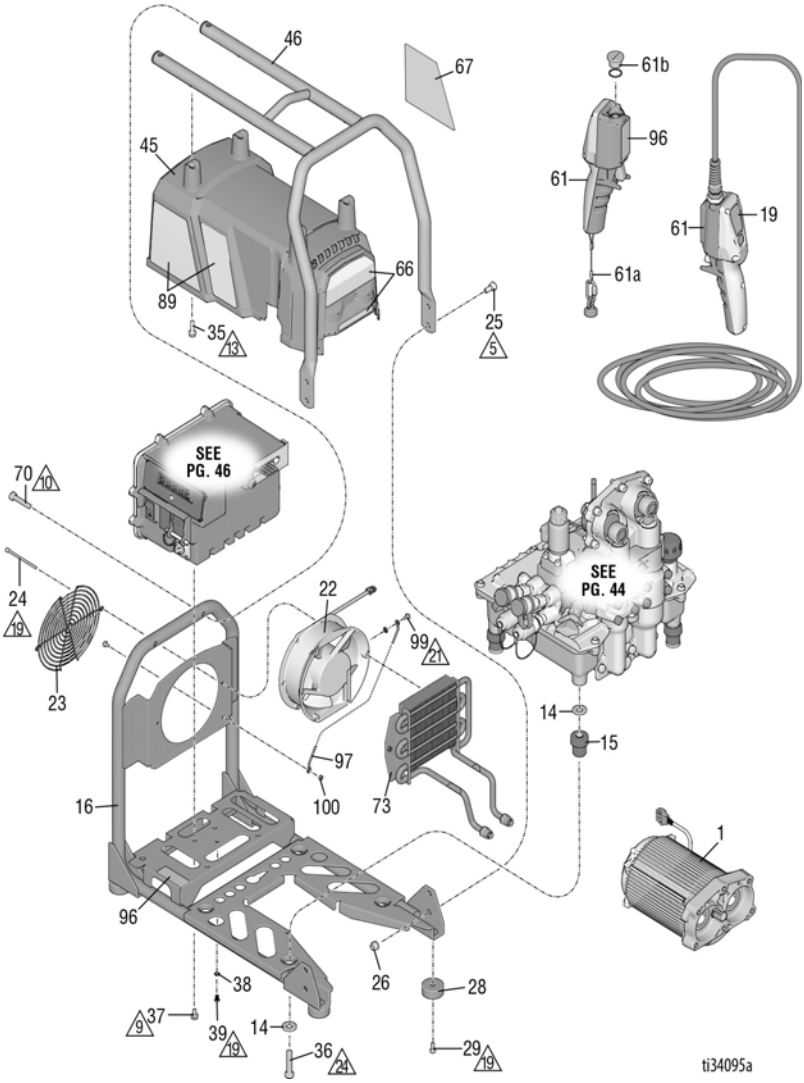

Renegade TSP Torque Series Pump Parts List

Ref.	Part	Description	Qty.
1	19Y111	KIT, motor, hydraulic power pack	1
14	100132	WASHER, flat	8
15	119695	DAMPENER, engine mount	4
16	19Y252	FRAME, bottom, painted	1
19	19Y251	LABEL, pendant	1
22	17U721	FAN, oil cooler, 120V	1
23	17U722	GUARD,	1
24	17U723	SCREW, shcs, m4 x 70mm	2
25	108768	SCREW, M8, , cap, hex head	4
26	104541	NUT, lock	4
28	17Z490	BUMPER	4
29	131327	BOLT, flange head, serrated, 1/4	4
36	18A977	SCREW, hex, hd	4
37	124709	SCREW, hex hd, flange	4
38	100718	WASHER	1
39	17Z459	SCREW, grounding	1
45	17U752	COVER, motor, painted	1
46	17U745	FRAME, top, painted	1
61		PENDANT, complete	
	19Y103	WIRED	1
	19Y102	WIRELESS *includes* CR123A battery	1
61a	18A681	MAGNET, lanyard	1
61b	24F260	KIT, battery cap w/ O-ring	1
66	17U756	LABEL, brand	1
67▲	17U757	LABEL, warning, EN, FR, ES (120V models)	1
	19Y577	LABEL, warning (230V models)	1
70	124757	SCREW, M8x40	2
73	17U696	COOLER, oil	1
89	17U682	LABEL, brand, side	1
96▲	19Y147	LABEL, operator, pendant	1
97	19Y369	WIRE, jumper, green	1
99	114993	SCREW, mach, pan wash hd	2
100	105689	NUT, machine hex	1

▲*Replacement safety labels, tags, and cards are available at no cost.*

Manifold Assembly Parts

Ref.	Torque	Ref.	Torque
1	50-55 ft-lbs (68.8-75.6 N•m)	7	6-8 ft-lbs (8.1-10.8 N•m)
2	57-61 ft-lbs (77-83 N•m)	8	19-21 ft-lbs (25.8-28.5 N•m)
4	4-5 ft-lbs (5.4-6.8 N•m)		

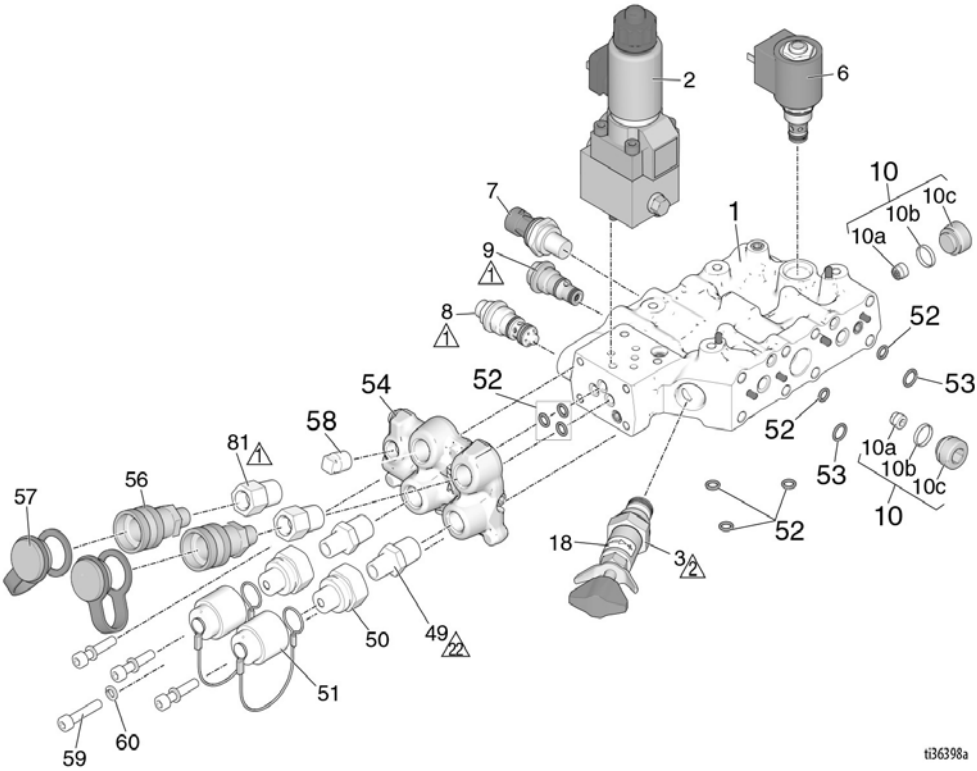

Manifold Assembly Parts List

Ref.	Part	Description	Qty.
1	19Y114	KIT, repair, manifold	1
2	19Y107	KIT, valve, 4-way, directional	1
3	19Y110	KIT, valve, manual, pressure set	1
6	19Y353	VALVE, 2-way, poppet	1
7	19Y108	KIT, transducer, high pressure	1
8	17U675	VALVE, pressure relief, 1500 PSI	1
9	17U685	VALVE, pressure relief, 12000 PSI	1
10†	19Y593	KIT, repair, valve, check, hp	2
10a◆	17Z470	VALVE check, high-pressure	1
10b◆	17U662	GASKET, plug	1
10c◆	17U661	PLUG, body	1
18	19Y418	LABEL, pressure control	1
49	19Y214	FITTING, filter, 1/4 NPT male	1
50	17U673	FITTING, qd, male, high pressure	2
51	17U674	FITTING, qd, cap	2
52†	557897	O-RING, -010, 90d, buna	8
53†	104282	O-RING, packing	2
54	19Y113	KIT, manifold, distribution	1
56	17U671	FITTING, qd, female, high pressure	2
57	17U672	FITTING, qd, plug	2
58*	17Z498	PLUG, pipe	1
59*	110580	SCREW, cap, socket hd	4
60*	108050	WASHER, lock, spring	4
81	19Y215	FITTING, filter, 1/4 NPT female	1

** Parts included in Kit 19Y113*

† Parts included in Kit 19Y114

◆ Parts included in Kit 19Y593

Motor Assembly Parts

Ref.	Torque	Ref.	Torque	Ref.	Torque
4	190-210 in-lbs (21.5-23.7 N•m)	10	95-105 in-lbs (10.7-11.9 N•m)	19	10-12 in-lbs (1.1-1.4 N•m)
5	20-25 ft-lbs (27.1-33.4 N•m)	11	5-7 ft-lbs (6.8-9.5 N•m)	23	40-45 ft-lbs (54.2-61.0 N•m)
6	50-70 in-lbs (5.6-7.9 N•m)	12	145-155 in-lbs (16.4-17.5 N•m)	26	57-61 ft-lbs (77-83 N•m)
7	155-175 in-lbs (5.6-6.8 N•m)	13	30-40 in-lbs (3.4-4.5 N•m)		
9	45-55 in-lbs (5.1-6.2 N•m)	14	Cranks to be assembled 180° out of phase		

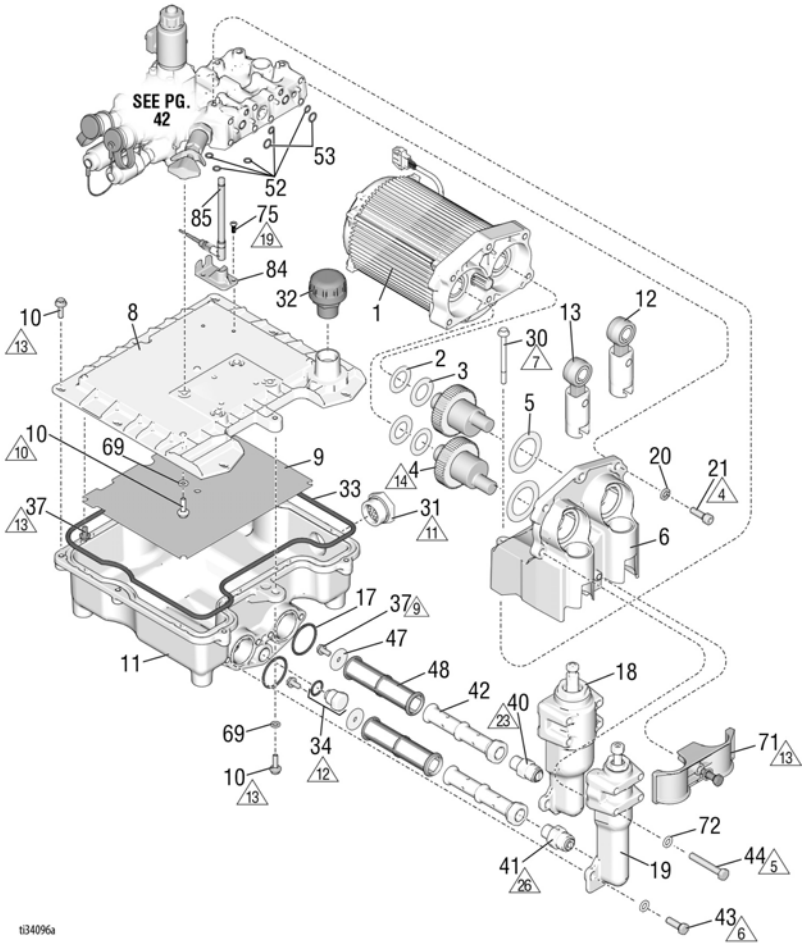

Motor Assembly Parts List

Ref.	Part	Description	Qty.
1	19Y111	KIT, motor, hydraulic power pack	1
2	116074	WASHER, thrust	2
3	107434	BEARING, thrust	2
4	19Y112	KIT, crank, assembled	2
5	17J166	BEARING, thrust	2
6	17U652	HOUSING, drive, complete	1
8	17U699	LID, reservoir, machined	1
9	17U701	PLATE, diverter, reservoir	1
10	17U702	SCREW, fhh, M6 x 20MM	12
11	17U703	RESERVOIR, machined	1
12	17U705	ROD, connecting, high flow	1
13	17U707	ROD, connecting, high pressure	1
17*†	17U720	O-RING, 128, 70D, buna	2
18	19Y106	PUMP, high flow *includes 17, 37, 40, 42, 43, 44, 47, 48, 52, 53, 72*	1
19	19Y104	PUMP, high pressure *includes 17, 37, 41, 42, 43, 44, 47, 48, 52, 53, 72*	1
20	104572	WASHER, lock spring	6
21	117536	SCREW. cap, hex head	6
30	17U729	SCREW	4
31	17U730	FITTING, indicator, fluid level	1
32	17U731	CAP, breather, fill	1
33	17U732	O-RING, 382, 70A	1
34	17U733	PLUG, drain	1
37*†	124709	SCREW, hex hd, flange	7
40*	17U588	VALVE, inlet check, high flow	1
41†	17U606	VALVE, inlet check, high pressure	1
42*†	17U593	SUPPORT, inlet strainer	2
43*†	107558	SCREW, cap, hex hd	4
44*†	17U744	SCREW, hex, m8 x 55mm	8
47*†	159346	WASHER	2
48*†	243226	FILTER, fluid	2
52*†	557897	O-RING	5
53*†	104282	O-RING	2
69	17Z489	WASHER, metal, sealing	4
71	17S590	GUARD, pump	1
72*†	111003	WASHER, flat	12
75	105676	SCREW, mach, PNH	2
84	17U644	BRACKET, antenna mount	1
85	17U743	ANTENNA, RF	1

* *Included in Kit 19Y106*
† *Included in Kit 19Y104*

Control Box Parts - 120V

Ref.	Torque	Ref.	Torque
2	10-12 in-lbs (1.1-1.4 N•m)	5	15-20 in-lbs (1.7-2.3 N•m)
3	17-21 in-lbs (1.9-2.4 N•m)	21	40-45 in-lbs (4.5-5.1 N•m)

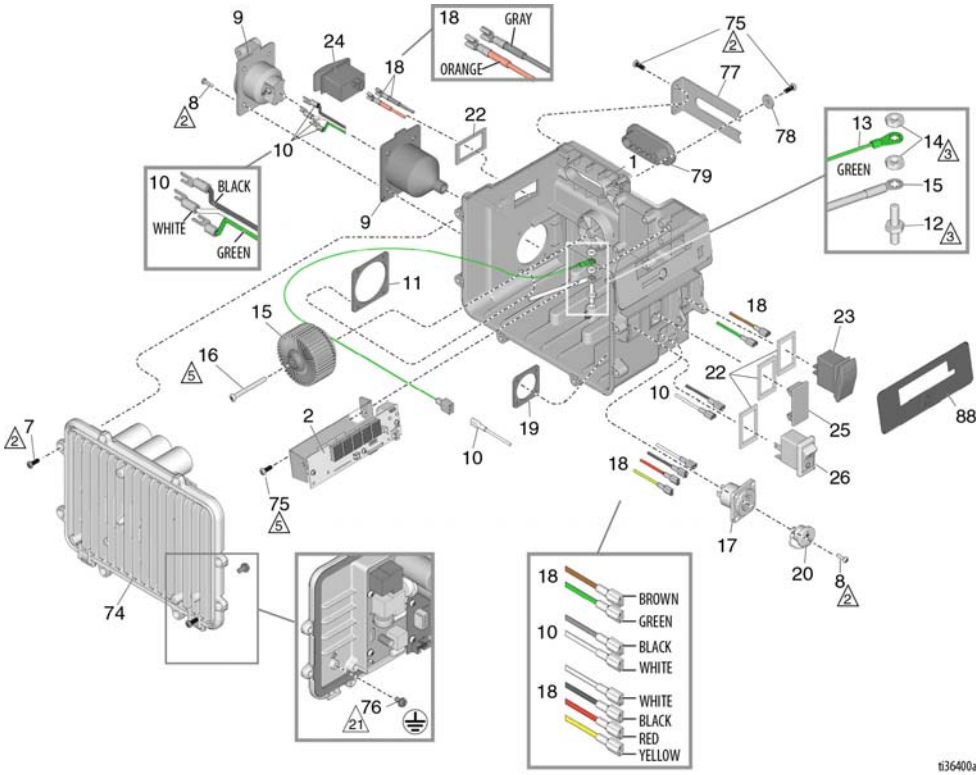

Control Box Parts List

Ref.	Part	Description	Qty.
1	278893	BOX, control, 120V	1
2	17U638	BOARD, assembly, display	1
8	114528	SCREW, mach, Phillips, PNHD	8
9	17U617	CONNECTOR, power, inlet	1
10		HARNESS, power	1
	17U618	120V	
		240V	
11	17U621	PLATE, backer, power connection	1
12	17Z458	STUD, terminal, ground	1
13	17S588	WIRE, green, 16 AWG, 8”, #10 serrated	1
14	100166	NUT, full hex	2
15	24Y030	KIT, repair, coil filter, *Includes 16*	1
16	16U215	SCREW, Phillips, PND, 120V	1
17	17U616	CONNECTOR, pendant	1
18	17U727	HARNESS, wire, board to switches	1
19	17U620	PLATE, backer, pendant connection	1
20	19Y411	COVER, connector	1
22	17U645	SEAL, panel	4
23	17U614	SWITCH, rocker, advance	1
24	17U615	SWITCH, two position, 15A/20A	1
25	17U613	PLUG, hole	1
26	120660	SWITCH, rocker, I/O	1
74	19Y115	CONTROL, assembly, 120V, *Includes 75 and 76*	1
75	105676	SCREW, mach, PNH	13
76	114391	SCREW, grounding	1
77	17U623	BRACKET, wire	1
78	17U622	WASHER, fender #8	2
79	17U625	HARNESS, main, w/strain relief	1
88	17U619	LABEL, display	1

Control Box Parts - 230V

Ref.	Torque	Ref.	Torque
2	10-12 in-lbs (1.1-1.4 N•m)	5	15-20 in-lbs (1.7-2.3 N•m)
3	17-21 in-lbs (1.9-2.4 N•m)		

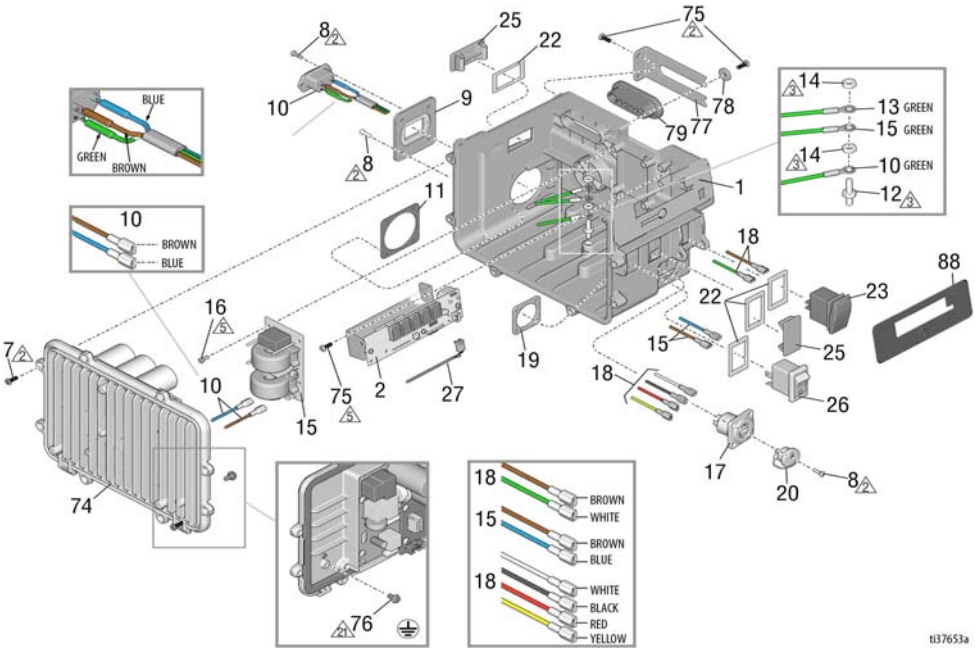

Control Box Parts List

Ref.	Part	Description	Qty.
1	278893	BOX, control, 120V	1
2	17U638	BOARD, assembly, display	1
8	114528	SCREW, mach, Phillips, PNHD	8
9	17U767	BRACKET, IEC connector	1
10	17U637	HARNESS, IEC power inlet	1
11	17U621	PLATE, backer, power connection	1
12	17Z458	STUD, terminal, ground	1
13	17S588	WIRE, green, 16 AWG, 8”, #10 serrated	1
14	100166	NUT, full hex	2
15	24W147	BOARD, filter, 230V	1
16	124131	SCREW, mach, pan head	1
17	17U616	CONNECTOR, pendant	1
18	17U727	HARNESS, wire, board to switches	1
19	17U620	PLATE, backer, pendant connection	1
20	19Y411	COVER, connector	1
22	17U645	SEAL, panel	4
23	17U614	SWITCH, rocker, advance	1
25	17U613	PLUG, hole	2
26	120660	SWITCH, rocker, I/O	1
74	19Y620	KIT, repair, control bard, 230V	1
75	105676	SCREW, mach, PNH	13
76	114391	SCREW, grounding	1
77	17U623	BRACKET, wire	1
78	17U622	WASHER, fender #8	2
79	17U625	HARNESS, main, w/strain relief	1
88	17U619	LABEL, display	1

Technical Specifications

Hydraulic Power Pack		
	US	Metric
Pressure	10,000 psi	700 bar, 68.9 MPa
Maximum delivery	1.7 gpm	6.4 lpm
Fluid outlet npt	1/4 in.	1/4 in.
Generator minimum	4000 W	4000 W
Motor (brushless DC)	2 HP	1500 W
120V, A, Hz	20A, 50/60	20A, 50/60
230V, A, Hz	10A, 50/60	10A, 60/60
Environmental temperature range	-40°–120°F	-40°– 49°C
Oil reserve capacity	1 gallon	3.8 liter
Recommended hydraulic oil	Grade ISO 10-68	
Operating oil viscosity range (centistokes)	See chart below	
Dimensions		
Weight (dry)	85 lb	39 kg
Height	17 in.	43 cm
Length	17.75 in.	25 cm
Width	14 in.	36 cm
Ingress Protection		
Power pack assembly	44	
Pendants	56	
Noise (dBa)*		
Maximum sound power	94.0 dBa @ 70 psi (0.48 MPa, 4.8 bar)	
Maximum sound pressure	80.0 dBa @ 70 psi (0.48 MPa, 4.8 bar)	
Notes: *Sound pressure measured 3.1 feet (1 meter) from equipment. Sound power measured per ISO-3744.		

Recommended Oil Temperature Ranges for Various Hydraulic Oil Weights

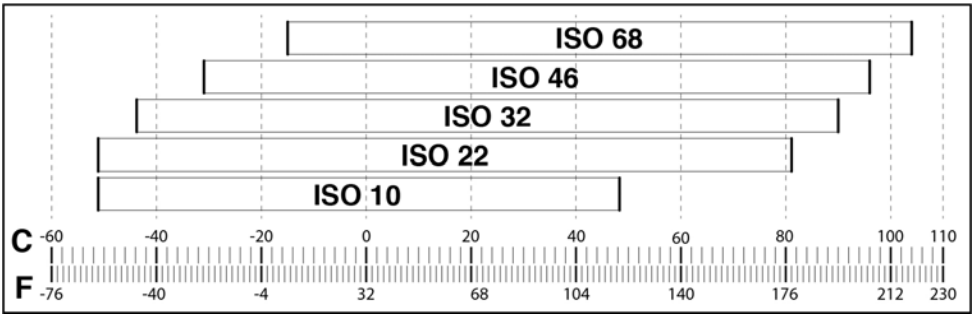

Compliance

Radio Frequency Approvals

Transmitter Frequency (all models): 433.92 MHz
Transmitter Power (all models): -9.50 dBm

NOTE: FCC/IC Notice (all models)
FCC ID: JHICED2
IC: 4840A-CED2

The enclosed device complies with Part 15 of the FCC Rules and with Industry Canada license-exempt RSS standard(s). Operation is subject to the following two conditions:(1) this device may not cause harmful interference and (2) this device must accept any interference received, including interference that may cause undesired operation.

Changes or modifications not expressly approved by the party responsible for compliance could void the user's authority to operate the equipment.

This equipment is not granted protection against harmful interference and cannot cause interference on systems properly authorized.

California Proposition 65

WARNING: This product can expose you to chemicals known to the State of California to cause cancer and birth defects or other reproductive harm. For more information go to www.P65Warnings.ca.gov.

Graco Standard Warranty

Graco warrants all equipment referenced in this document which is manufactured by Graco and bearing its name to be free from defects in material and workmanship on the date of sale to the original purchaser for use. With the exception of any special, extended, or limited warranty published by Graco, Graco will, for a period of twelve months from the date of sale, repair or replace any part of the equipment determined by Graco to be defective. This warranty applies only when the equipment is installed, operated and maintained in accordance with Graco's written recommendations.

This warranty does not cover, and Graco shall not be liable for general wear and tear, or any malfunction, damage or wear caused by faulty installation, misapplication, abrasion, corrosion, inadequate or improper maintenance, negligence, accident, tampering, or substitution of non-Graco component parts. Nor shall Graco be liable for malfunction, damage or wear caused by the incompatibility of Graco equipment with structures, accessories, equipment or materials not supplied by Graco, or the improper design, manufacture, installation, operation or maintenance of structures, accessories, equipment or materials not supplied by Graco.

This warranty is conditioned upon the prepaid return of the equipment claimed to be defective to an authorized Graco distributor for verification of the claimed defect. If the claimed defect is verified, Graco will repair or replace free of charge any defective parts. The equipment will be returned to the original purchaser transportation prepaid. If inspection of the equipment does not disclose any defect in material or workmanship, repairs will be made at a reasonable charge, which charges may include the costs of parts, labor, and transportation.

THIS WARRANTY IS EXCLUSIVE, AND IS IN LIEU OF ANY OTHER WARRANTIES, EXPRESS OR IMPLIED, INCLUDING BUT NOT LIMITED TO WARRANTY OF MERCHANTABILITY OR WARRANTY OF FITNESS FOR A PARTICULAR PURPOSE.

Graco's sole obligation and buyer's sole remedy for any breach of warranty shall be as set forth above. The buyer agrees that no other remedy (including, but not limited to, incidental or consequential damages for lost profits, lost sales, injury to person or property, or any other incidental or consequential loss) shall be available. Any action for breach of warranty must be brought within two (2) years of the date of sale.

GRACO MAKES NO WARRANTY, AND DISCLAIMS ALL IMPLIED WARRANTIES OF MERCHANTABILITY AND FITNESS FOR A PARTICULAR PURPOSE, IN CONNECTION WITH ACCESSORIES, EQUIPMENT, MATERIALS OR COMPONENTS SOLD BUT NOT MANUFACTURED BY GRACO. These items sold, but not manufactured by Graco (such as electric motors, switches, hose, etc.), are subject to the warranty, if any, of their manufacturer. Graco will provide purchaser with reasonable assistance in making any claim for breach of these warranties.

In no event will Graco be liable for indirect, incidental, special or consequential damages resulting from Graco supplying equipment hereunder, or the furnishing, performance, or use of any products or other goods sold hereto, whether due to a breach of contract, breach of warranty, the negligence of Graco, or otherwise.

Graco Information

For the latest information about Graco products, visit www.graco.com.
For patent information, see www.graco.com/patents.

TO PLACE AN ORDER, contact your Graco distributor or call 1-800-690-2894 to identify the nearest distributor.

All written and visual data contained in this document reflects the latest product information available at the time of publication.
Graco reserves the right to make changes at any time without notice.

Original instructions. This manual contains English. MM 3A6884

Graco Headquarters: Minneapolis
International Offices: Belgium, China, Japan, Korea

GRACO INC. AND SUBSIDIARIES • P.O. BOX 1441 • MINNEAPOLIS MN 55440-1441 • USA

Copyright 2019, Graco Inc. All Graco manufacturing locations are registered to ISO 9001.

www.graco.com
Revision B, January 2020