FM30/FM150/FM300 Broadcast Transmitter

User's Manual

©2007 Crown Broadcast, a division of
International Radio & Electronics Corporation
25166 Leer Drive, Elkhart, Indiana, 46514-5425 U.S.A. (574) 262-8900

Revision Control

Revision	Print Date
Initial Release	March 2007

Important Notices

©2007, Crown Broadcast, a division of International Radio & Electronics Corporation.
Portions of this document were originally copyrighted by Michael P. Axman in 1994.

All rights reserved. No part of this publication may be reproduced, transmitted, transcribed, stored in a retrieval system, or translated into any language in any form by any means without the written permission of International Radio & Electronics Corporation.
Printed in U.S.A.

Crown Broadcast attempts to provide information that is accurate, complete, and useful. Should you find inadequacies in the text, please send your comments to the following address:

International Radio & Electronics Corporation
25166 Leer Drive
Elkhart, Indiana, 46514-5425 U.S.A.

Contents

Section 1– Getting Acquainted 1-1

1.1 Your Transmitter 1-2
1.2 Applications and Options 1-3
1.2.1 Stand Alone 1-4
1.2.2 Backup 1-4
1.2.3 Booster 1-4
1.2.4 Exciter 1-4
1.2.5 Translator 1-5
1.2.6 Satellator 1-6
1.2.7 Nearcasting 1-6
1.3 Transmitter/Exciter Specifications 1-7
1.4 Receiver Specifications 1-9
1.5 Safety Considerations 1-10
1.5.1 Dangers 1-10
1.5.2 Warnings 1-10
1.5.3 Cautions 1-10

Section 2– Installation 2-1

2.1 Operating Environment 2-2
2.2 Power Connections 2-2
2.2.1 AC Line Voltage Setting 2-2
2.2.2 Fuses 2-5
2.2.3 Battery Power 2-5
2.3 Frequency (Channel) Selection 2-5
2.3.1 Modulation Compensator 2-7
2.4 Receiver Frequency Selection 2-7
2.5 RF Connections 2-10
2.6 Audio Input Connections 2-11
2.7 SCA Input Connections 2-12
2.8 Composite Input Connection 2-12
2.9 Audio Monitor Connections 2-13
2.10 Pre-emphasis Selection 2-13
2.11 Program Input Fault Time-out 2-14
2.12 Remote I/O Connector 2-14

Section 3-Operation 3-1

3.1 Initial Power-up Procedures 3-2
3.2 Power Switches 3-4
3.2.1 DC Breaker 3-4
3.2.2 Power Switch 3-4
3.2.3 Carrier Switch 3-4
3.3 Front Panel Bar-Dot Displays 3-5
3.3.1 Audio Processor Input 3-5
3.3.2 Highband and Wideband Display 3-5
3.3.3 Modulation Display 3-5
3.4 Input Gain Switches 3-6
3.5 Processing Control 3-6
3.6 Stereo-Mono Switch 3-6
3.7 RF Output Control 3-7
3.8 Digital Multimeter 3-7
3.9 Fault Indicators 3-8

Section 4-Principals of Operation 4-1

4.1 Part Numbering 4-2
4.2 Audio Processor Circuit 4-3
4.3 Stereo Generator Circuit 4-4
4.4 RF Exciter Circuit Board 4-6
4.5 Metering Circuit Board 4-8
4.6 Motherboard 4-9
4.7 Display Circuit Board 4-10
4.8 Voltage Regulator Circuit Board 4-11
4.9 Power Regulator Circuit Board 4-12
4.10 RF Driver/Amplifier (FM30) 4-12
4.11 RF Driver (FM150/FM300) 4-13
4.12 RF Amplifier (FM150/FM300 4-13
4.13 Chassis 4-14
4.14 RF Output Filter & Reflectometer 4-14
4.15 Receiver Circuit Board Option 4-15

Section 5-Adjustments and Tests 5-1
5.1 Audio Processor Adjustments 5-2
5.1.1 Pre-Emphasis Selection 5-2
5.1.2 Pre-Emphasis Adjustment 5-2
5.2 Stereo Generator Adjustments 5-2
5.2.1 Separation 5-2
5.2.2 Composite Output 5-2
Using a Modulation Monitor 5-3
5.2.3 19kHz Level 5-4
5.2.4 19kHz Phase 5-4
5.3 Frequency Synthesizer Adjustments 5-4
5.3.1 Frequency (Channel) Selection 5-4
5.3.2 Modulation Compensator 5-4
5.3.3 Frequency Measurement and Adjustment 5-4
5.3.4 FSK Balance Control 5-5
5.4 Metering Board Adjustments 5-5
5.4.1 Power Calibrate 5-5
5.4.2 Power Set 5-5
5.4.3 SWR Calibrate 5-5
5.4.4 PA Current Limit 5-6
5.5 Motherboard Adjustments 5-6
5.6 Display Modulation Calibration 5-6
5.7 Voltage Regulator Adjustment 5-6
5.8 Bias Set (RF Power Amplifier) 5-7
5.9 Performance Verification 5-7
5.9.1 Audio Proof of Performance Measurements 5-7
5.9.2 De-Emphasis Input Network 5-7
5.10 Carrier Frequency 5-8
5.11 Output Power 5-8
5.12 RF Bandwidth and RF Harmonics 5-8
5.13 Pilot Frequency 5-8
5.14 Audio Frequency Response 5-9
5.15 Audio Distortion 5-9
5.16 Modulation Percentage 5-9
5.17 FM and AM Noise 5-9
5.18 Stereo Separation 5-9
5.19 Crosstalk 5-9
5.19.1 Main Channel Into Sub 5-10
5.19.2 Sub Channel Into Main 5-10
5.20 38kHz Subcarrier Suppression 5-10
5.21 Additional Checks 5-10

Section 6-Reference Drawings 6-1
6.1 Views 6-2
6.2 Board Layouts and Schematics 6-4

Section 7-Service and Support 7-1
7.1 Service 7-2
7.2 24-Hour Support 7-2
7.3 Spare Parts 7-2

Transmitter Output Efficiency Appendix-1

Glossary G-1

Index Index-1

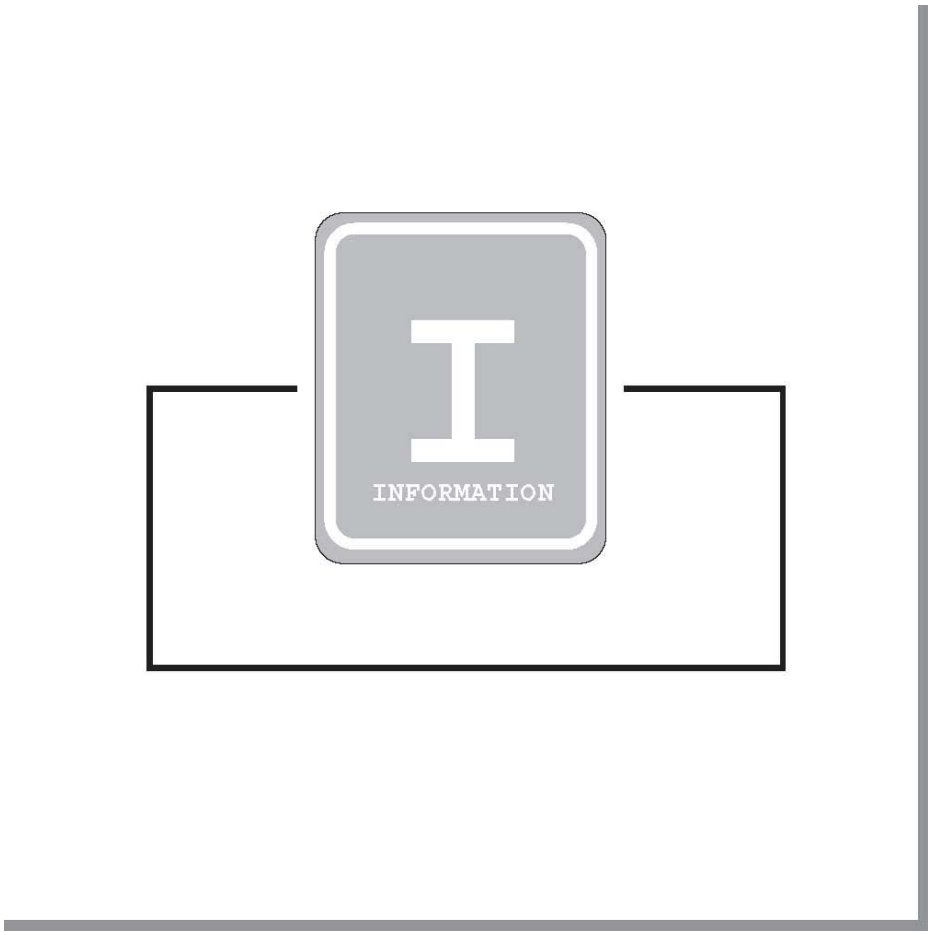

Section 1—Getting Acquainted

This section provides a general description of the FM30, FM150, and FM300 transmitters and introduces you to safety conventions used within this document. *Review this material before installing or operating the transmitter.*

1.1 Your Transmitter

The FM30, FM150, and FM300 are members of a family of FM stereo broadcast transmitters. Crown transmitters are known for their integration, ease-of-use, and reliability.

The integration is most apparent in the standard transmitter configuration which incorporates audio processing, stereo generation, and RF amplification without compromised signal quality. A single Crown transmitter can replace several pieces of equipment in a traditional system.

Ease-of-use is apparent in the user-friendly front panel interface and in the installation procedure. Simply select your operating frequency (using 5 external switches), add an audio source, attach an antenna, and connect AC or DC power and you're ready to broadcast. Of course, the FM series of transmitters also feature more sophisticated inputs and monitoring connections if needed.

Reliability is a Crown tradition. The first Crown transmitters were designed for rigors of worldwide and potentially portable use. The modular design, quality components, engineering approach, and high production standards ensure stable performance.

Remote control and metering of the transmitter are made possible through a built-in I/O port. For more direct monitoring, the front panel includes a digital multimeter display and status indicators. Automatic control circuitry provides protection for high VSWR as well as high current, voltage, and temperature conditions.

Illustration 1-1 FM150 Stereo Broadcast Transmitter

This manual describes the FM30, FM150, and FM300 because all three transmitters share common design factors. Specific product differences are noted throughout the manual. In physical appearance, the FM30 differs from the FM150 and FM300 in that it lacks the power amplifier and cooling fan assembly on the back panel.

1.2 Applications and Options

Crown transmitters are designed for versatility in applications. They have been used as stand-alone and backup transmitters and in booster, translator, satellator, and nearcast applications. The following discussion describes these applications further.

Model numbers describe the configuration of the product (which has to do with its intended purpose) and the RF output power which you can expect.

The number portion of each name represents the maximum RF output power. The FM300, for example, can generate up to 300 watts of RF output power.

Suffix letters describe the configuration. The FM300T, for example, is the standard or transmitter configuration. Except where specified, this document describes the transmitter configuration. In this configuration, the product includes the following components (functions):

- Audio Processor/Stereo Generator
- RF Exciter
- Metering
- Low-Pass filter

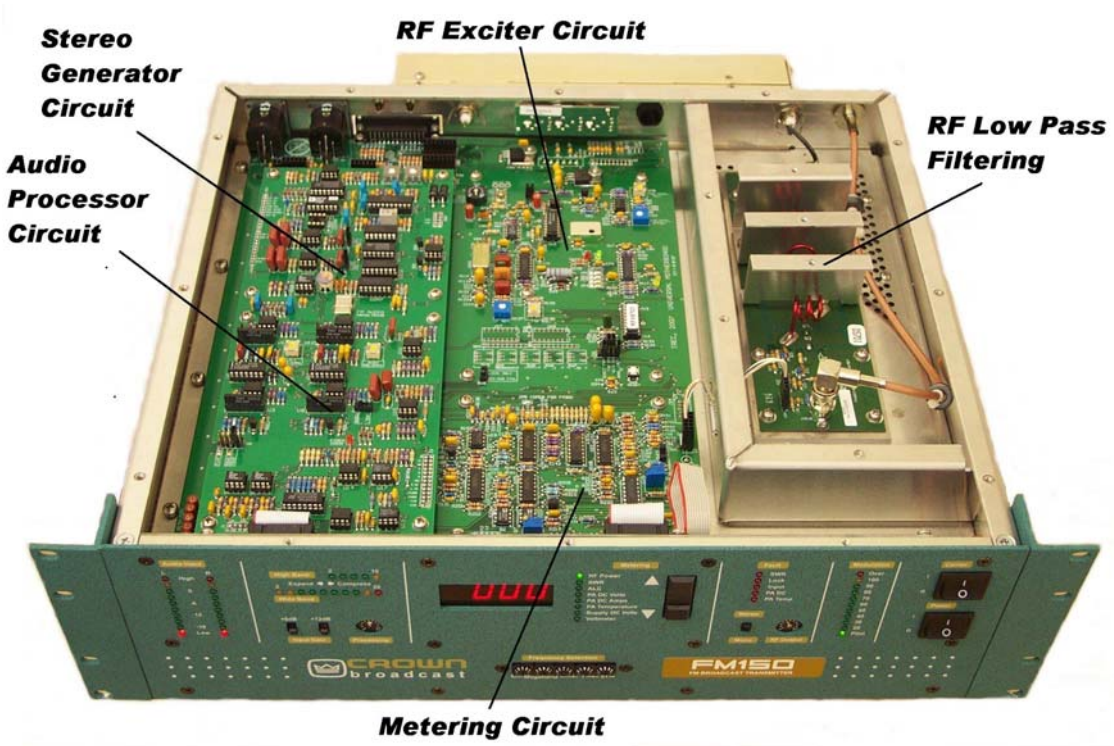

Illustration 1–2 Standard (Transmitter) Configuration

1.2.1 Stand-Alone

In the standard configuration, the FM30, FM150, and FM300 are ideal stand-alone transmitters. When you add an audio source (monaural, L/R stereo, or composite signal), an antenna, and AC or DC power, the transmitter becomes a complete FM stereo broadcast station, capable of serving a community.
As stand-alone transmitters, Crown units often replace multiple pieces of equipment in a traditional setup (exciter, audio processor, RF amplifier).

1.2.2 Backup

In the standard configuration, Crown transmitters are also used in backup applications. Should your primary transmitter become disabled, you can continue to broadcast while repairs take place. In addition, the FM transmitters can replace disabled portions of your existing system including the exciter, audio processor, or amplifier. Transfer switches on each side of the existing and backup transmitters make the change-over possible with minimal downtime.
The DC operation option of the FM30, FM150, and FM300 make them attractive backup units for those times when AC power is lost.

1.2.3 Exciter

In addition to the standard configuration, the FM30, FM150, and FM300 are available in optional configurations to meet a variety of needs.
An "E" suffix, as in the FM30E, for example, represents an exciter-only configuration. In this configuration, the audio processor and stereo generator boards are replaced with circuitry to bypass their function. The exciter configurations are the least expensive way to get Crown quality components into your transmission system.
You might consider the Crown exciter when other portions of your system are performing satisfactorily and you want to maximize your investment in present equipment.

1.2.4 Translator

A receiver configuration (FM150R, for example) replaces the audio processor/stereo generator board with a receiver module. This added feature makes the FM30, FM150, and FM300 ideal for translator service in terrestrial-fed networks. These networks represent a popular and effective way to increase your broadcasting coverage. Translators, acting as repeater emitters, are necessary links in this chain of events.
Traditionally, network engineers have relied on multiple steps and multiple pieces of equipment to accomplish the task. Others have integrated the translator function (receiver and exciter) to feed an amplifier. Crown, on the other hand, starts with an integrated transmitter and adds a solid-state Receiver Module to form the ideal translator.

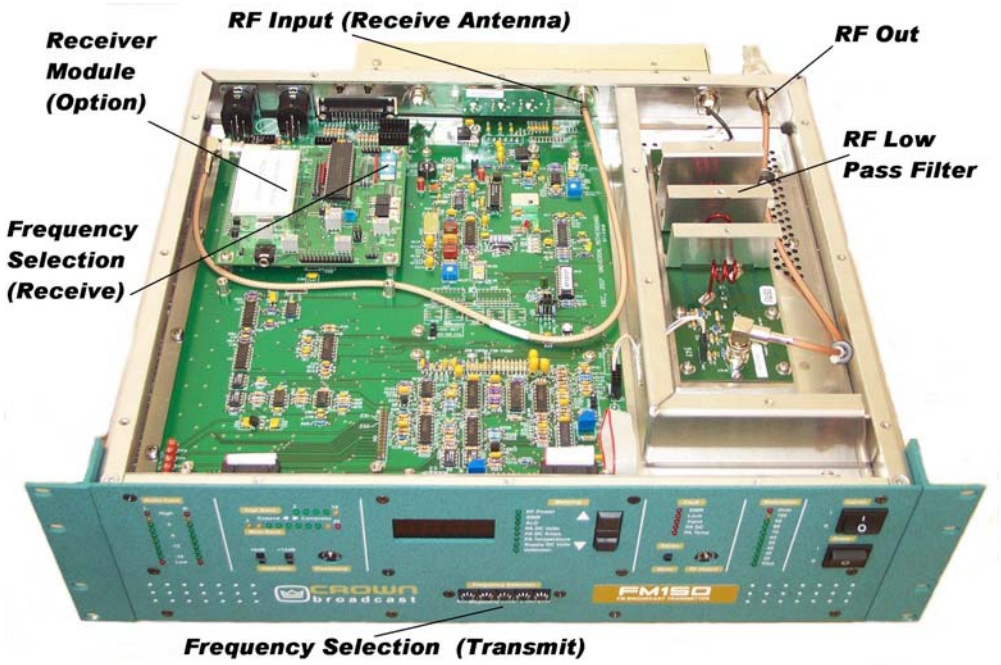

Illustration 1–3 Crown's Integrated Translator

This option enables RF in and RF out on any of Crown's FM series of transmitters. In addition, the module supplies a composite output to the RF exciter portion of the transmitter. From here, the signal is brought to full power by the built-in power amplifier for retransmission. The Receiver Module has been specifically designed to handle SCA channel output up to 100 kHz for audio and high-speed data.
FSK ID programming is built-in to ensure compliance with FCC regulations regarding the on-air identification of translators. Simply specify the call sign of the repeater station when ordering. Should you need to change the location of the translator, replacement FSK chips are available. The Receiver Module option should be ordered at the time of initial transmitter purchase. However, an option kit is available for field converting existing Crown units.
In the translator configuration there are differences in the function of the front panel, see Section 3 for a description.

1.2.5 Satellator

One additional option is available for all configurations—an FSK Identifier (FSK IDer). This added feature enables the FM30, FM150, and FM300 to transmit its call sign or operating frequency in a Morse code style. This option is intended for use in satellite-fed networks. Transmitters equipped in this fashion are often known as "satellators."
Connect the transmitter to your satellite receiver and the pre-programmed FSK IDer does the rest—shifting the frequency to comply with FCC requirements and in a manner that is unnoticeable to the listener. The FSK IDer module should be ordered at the time you order your transmitter, but is available separately (factory programmed for your installation).

Illustration 1–4 Transmitter with FSK IDer Option

Add the FSK IDer option to the exciter configuration for the most economical satellator (a composite input signal is required).

1.2.6 Nearcasting

The output power of an FM30 transmitter can be reduced to a level that could function as a near-cast transmitter. Crown transmitters have been used in this way for language translation, for re-broadcasting the audio of sporting events within a stadium, and for specialized local radio. The FM30 is the only transmitter that is appropriate for this application.

1.3 Transmitter/Exciter Specifications

Frequency Range	87.9 MHz–107.9 MHz (76 MHz–90 MHz optionally available)
RF Power Output	(VSWR 1.7:1 or better)
FM30	3-33 Watts adjustable
FM150	15-165 Watts adjustable
FM300	30-330 Watts adjustable
RF Output Impedance	50 Ohms
Frequency Stability	Meets FCC specifications from 0-50 degrees C
Audio Input Impedance	50k Ω bridging, balanced, or 600 Ω
Audio Input Level	Selectable for –10 dBm to +10 dBm for 75 kHz deviation at 400 Hz
Pre-emphasis	Selectable for 25, 50, or 75 µsec; or flat
Audio Response	Conforms to 75 µsec pre-emphasis curve as follows:
Complete Transmitter	±0.30 dB (50 Hz–10 kHz) ±1.0 dB (10 kHz–15 kHz)
Exciter only	±0.25 dB (50 Hz–15 kHz)
Distortion (THD + Noise)	
Complete Transmitter	Less than 0.7% (at 15kHz)
Exciter only	Less than 0.3% (50Hz-15kHz)
Stereo Separation	
Complete Transmitter	Better than –40dB (50Hz-15kHz)
Exciter only	Better than –40dB (50Hz-15kHz)
Crosstalk	Main into Sub, better than –40dB Sub into Main, better than –40dB
Stereo Pilot	19 kHz ±2 Hz, 9% modulation

Subcarrier Suppression	50dB below ±75 kHz deviation
FM S/N Ratio (FM noise)	
Complete Transmitter	Better than –60dB
Exciter only	Better than –70dB
AM S/N Ratio	Asynchronous and synchronous noise better than FCC requirements
RF Bandwidth	±120 kHz, better than –35 dB
	±240 kHz, better than –45 dB
RF Spurious Products	Better than –70dB
Operating Environment	Temperature (0°C to 50°C)
	Humidity (0 to 80% at 20°C)
	Maximum Altitude (3,000 Meters; 9834 Feet
AC Power	100,120, 220, or 240 volts +10%/-15%); 50/60Hz
FM30	115VA
FM150	297VA
FM300	550VA
DC Power	
FM30	24-36 volts (36 volts at 3 amps required for full output power)
FM150	36-72 volts (48 volts @ 7 amps for full output power)
FM300	36-72 volts (72 volts @ 10 amps for full output power)

Note: We set voltage and ampere requirements to assist you in designing your system. Depending on your operating frequency, actual requirements for maximum voltage and current readings are 10–15% lower than stated.

Regulatory	Type notified FCC parts 73 and 74 Meets FCC, DOC, and CCIR requirements
Dimensions	13.5 x 41.9 x 44.5 cm 5.25 x 16.5 x 17.5 inches
Weight	
FM30	10.5 kg (23 lbs) 13.6 kg (30 lbs) shipping weight
FM150	11.4 kg (25 lbs) 14.5 kg (32 lbs) shipping weight
FM300	16.8 kg (37 lbs) 20.0 kg (44 lbs) shipping weight

1.4 Receiver Specifications

Monaural Sensitivity (demodulated, de-emphasized)
3.5 µ V for signal-to-noise > 50 dB

Stereo Sensitivity (19–kHz pilot frequency added)
31 µ V for signal-to-noise > 50 dB

Connector
Standard type N, 50 Ω

Shipping Weight
1 lb

1.5 Safety Considerations

Crown Broadcast assumes the responsibility for providing you with a safe product and safety guidelines during its use. “Safety” means protection to all individuals who install, operate, and service the transmitter as well as protection of the transmitter itself. To promote safety, we use standard hazard alert labeling on the product and in this manual. Follow the associated guidelines to avoid potential hazard.

1.5.1 Dangers

DANGER represents the most severe hazard alert. Extreme bodily harm or death will occur if DANGER guidelines are not followed.

1.5.2 Warnings

WARNING represents hazards which could result in severe injury or death.

1.5.3 Cautions

CAUTION indicates potential personal injury, or equipment or property damage if the associated guidelines are not followed. Particular cautions in this text also indicate unauthorized radio-frequency operation.

Illustration 1–5 Sample Hazard Alert

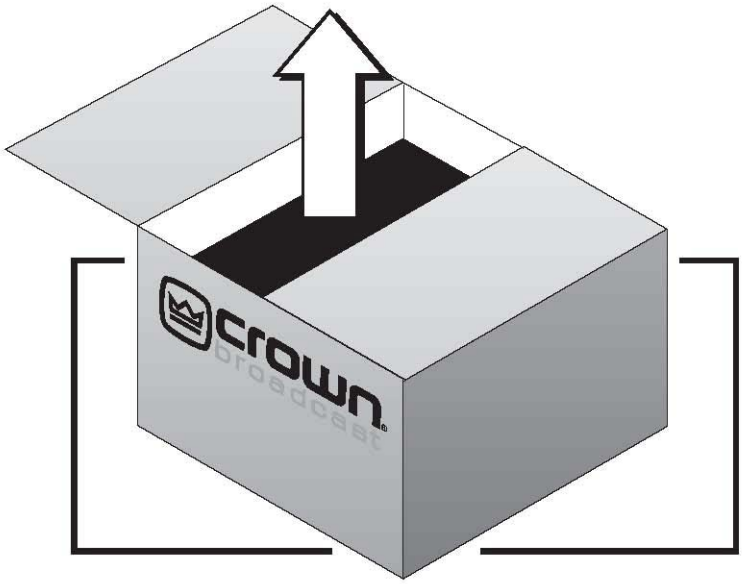

Section 2—Installation

This section provides important guidelines for installing your transmitter. Review this information carefully for proper installation.

CAUTION

Possible equipment damage!

Never connect a battery charger to the input terminals of the transmitter unless a battery is also connected. Voltage peaks from a typical charger (without the load of a battery) can be destructive to the transmitter.

2.1 Operating Environment

You can install the FM transmitter in a standard component rack or on a suitable surface such as a bench or desk. In any case, the area should be as clean and well ventilated as possible. Always allow for at least 2 cm of clearance under the unit for ventilation. If you set the transmitter on a flat surface, install spacers on the bottom cover plate. If you install the transmitter in a rack, provide adequate clearance above and below. Do not locate the transmitter directly above a hot piece of equipment.

2.2 Power Connections

The FM30, FM150, and FM300 operate on 100, 120, 220, or 240 volts AC (50 or 60 Hz; single phase). Each transmitter can operate on DC power as well (28 volts for the FM30, 48 volts for the FM150, and 72 volts for the FM300). The transmitter can operate on fewer volts DC, but with reduced RF output power (see section 1.3). In addition, the transmitter isolates the AC and DC sources; both can be connected at the same time to provide battery backup in the event of an AC power failure.

2.2.1 AC Line Voltage Setting

To change the voltage setting, follow these steps:

1. Disconnect the power cord if it is attached.

2. Open the cover of the power connector assembly using a small, flat blade screw driver. See Illustration 2–1.

3. Insert the screwdriver into the voltage selection slot and remove the drum from the assembly.

4. Rotate the drum to select the desired voltage. See Illustration 2–2.

5. Replace the drum and cover and check to see that the correct voltage appears in the connector window.

6. Connect the AC power cord.

Illustration 2–1 Removing the Power Connector Cover

Illustration 2–2 Selecting an AC Line Voltage

2.2.2 Fuses

The fuse holders are located in the power connector assembly just below the voltage selector.

Illustration 2–3 Fuse Holder

For 100 to 120 VAC operation, use the fuse installed at the factory. For 220 to 240 VAC operation, use the slow-blow fuse located in a hardware kit within the transmitter packaging. Consult the following table:

Transmitter	Input Power	Fuse
FM30	100–120 V	3 A
	220–240 V	1.5 A
FM150	100–120 V	6.3 A
	220–240 V	4 A
FM300	100–120 V	12.5 A
	220–240 V	6.3 A

Illustration 2–4 Fuse Reference Table

2.2.3 Battery Power

Your transmitter can operate on a DC power source (such as 4 or 5, 12–volt deep cycle batteries connected in series). The FM30 requires 28 volts DC for full output power, while the FM150 requires 48 volts, and FM300 requires 72 volts for full output power. Connect the batteries to the red (+) and black (–) battery input binding posts on the rear panel.

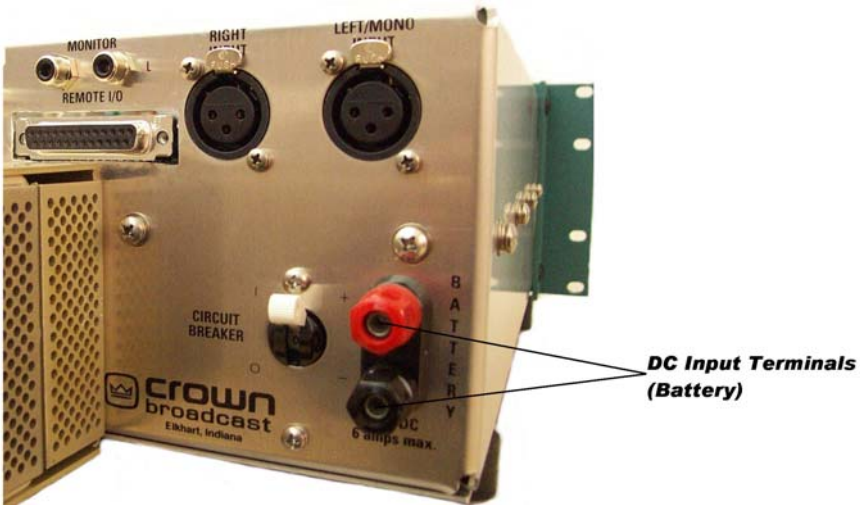

2–5 Illustration DC Input Terminals

CAUTION

Possible equipment damage!

Never connect a battery charger to the input terminals of the transmitter unless a battery is also connected. Voltage peaks from a typical charger (without the load of a battery) can be destructive to the transmitter.

2.3 Frequency (Channel) Selection

Your transmitter is capable of operating between 87.9 and 107.9 MHz in the FM band. The transmitter can also operate between 76 and 90 MHz by shorting pins 9 and 10 of J20 on the motherboard. *(See illustration 2-6)*

To adjust the operating frequency, follow these steps:

1. Locate the frequency selector switches on the front panel which will be used to change the setting. See Illustrations 2–6 and 2–7.

2. Use small flat blade screwdriver or another suitable device to rotate the switches to the desired setting. (The selected number will appear directly above the white indicator dot on each switch.) See examples of selected frequencies in the illustration below.

3. To change the operating band from 87.9-107.9MHz to 76-90MHz or vice versa, or to adjust the modulation compensation pot, remove the top cover to gain access to these features. See illustrations 2-6 and 2-10.

Illustration 2–6 Top Cover Removed

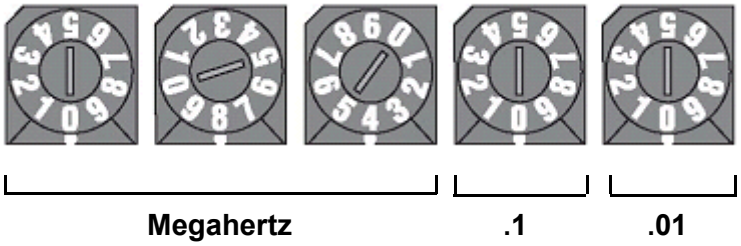

Illustration 2–7 Transmitter Front Panel (Frequency Selector Switches)

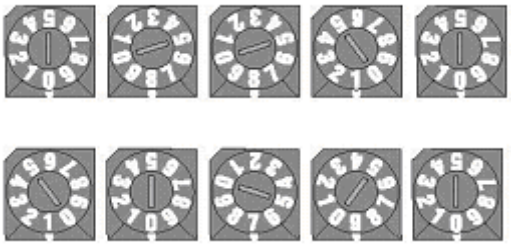

= 88.10 MHz

= 107.90 MHz

Illustration 2–8 Two Sample Frequency Selections

2.3.1 Modulation Compensator

The Modulation trim-potentiometer (see illustration 2–10) compensates for slight variations in deviation sensitivity with frequency. Set the trim-pot dial according to the following graph:

Frequency of Operation (MHz)	Modulation Compensation Pot Setting
108	0
106	10
104	15
102	25
100	35
98	40
97.1	45
96	55
94	60
92	70
90	75
88	80
86	80
84	80
82.4	70
82	65
80	55
78	30
76	0

Illustration 2–9 Modulation Compensator Settings

These compensator settings are approximate. Each mark on the potentiometer represents about 1.8% modulation compensation.

Illustration 2–10 Modulation Compensator Pot

2.4 Receiver Frequency Selection

If you have a transmitter equipped with the receiver option, you will need to set the receiving or incoming frequency.

1. With the top cover removed, locate the receiver module and the two switches (labeled SW1 and SW2).

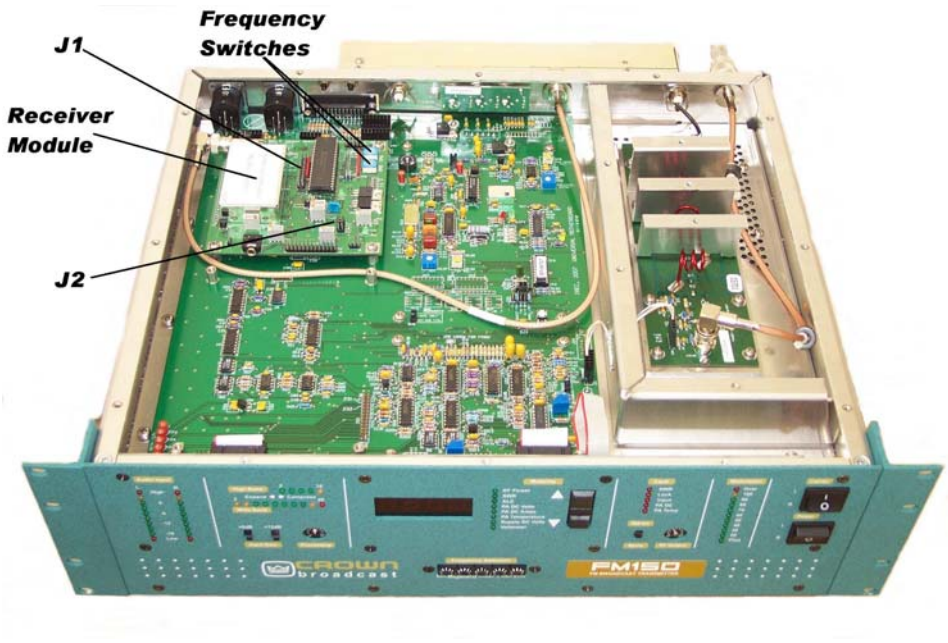

Illustration 2–11 Receiver Module Switches

2. Use the adjacent chart to set the switches for the desired incoming frequency.
3. For frequencies in the Japan FM band, short pins 7&8 on J1 on the receiver card.
4. For 75us pre-emphasis short pins 3&4 and 5&6 on J2 of the Receiver card.
5. For 50us pre-emphasis short pins 1&2 and 7&8 on J2 of the Receiver card.
6. After setting the frequency, replace the top cover and screws.

Freq. 74-90 MHz	Freq. 88-108 MHz	SW1	SW2	Freq. 74-90 MHz	Freq. 88-108 MHz	SW1	SW2
74.9	87.9	0	0	78.9	91.9	1	4
75.0	88.0	8	0	79.0	92.0	9	4
75.1	88.1	0	1	79.1	92.1	1	5
75.2	88.2	8	1	79.2	92.2	9	5
75.3	88.3	0	2	79.3	92.3	1	6
75.4	88.4	8	2	79.4	92.4	9	6
75.5	88.5	0	3	79.5	92.5	1	7
75.6	88.6	8	3	79.6	92.6	9	7
75.7	88.7	0	4	79.7	92.7	1	8
75.8	88.8	8	4	79.8	92.8	9	8
75.9	88.9	0	5	79.9	92.9	1	9
76.0	89.0	8	5	80.0	93.0	9	9
76.1	89.1	0	6	80.1	93.1	1	A
76.2	89.2	8	6	80.2	93.2	9	A
76.3	89.3	0	7	80.3	93.3	1	B
76.4	89.4	8	7	80.4	93.4	9	B
76.5	89.5	0	8	80.5	93.5	1	C
76.6	89.6	8	8	80.6	93.6	9	C
76.7	89.7	0	9	80.7	93.7	1	D
76.8	89.8	8	9	80.8	93.8	9	D
76.9	89.9	0	A	80.9	93.9	1	E
77.0	90.0	8	A	81.0	94.0	9	E
77.1	90.1	0	B	81.1	94.1	1	F
77.2	90.2	8	B	81.2	94.2	9	F
77.3	90.3	0	C	81.3	94.3	2	0
77.4	90.4	8	C	81.4	94.4	A	0
77.5	90.5	0	D	81.5	94.5	2	1
77.6	90.6	8	D	81.6	94.6	A	1
77.7	90.7	0	E	81.7	94.7	2	2
77.8	90.8	8	E	81.8	94.8	A	2
77.9	90.9	0	F	81.9	94.9	2	3
78.0	91.0	8	F	82.0	95.0	A	3
78.1	91.1	1	0	82.1	95.1	2	4
78.2	91.2	9	0	82.2	95.2	A	4
78.3	91.3	1	1	82.3	95.3	2	5
78.4	91.4	9	1	82.4	95.4	A	5
78.5	91.5	1	2	82.5	95.5	2	6
78.6	91.6	9	2	82.6	95.6	A	6
78.7	91.7	1	3	82.7	95.7	2	7
78.8	91.8	9	3	82.8	95.8	A	7

Illustration 2–12-1 Receiver Frequency Selection

(Continued on next page)

Freq. 74-90 MHz	Freq. 88-108 MHz	SW1	SW2	Freq. 74-90 MHz	Freq. 88-108 MHz	SW1	SW2
82.9	95.9	2	8	86.6	99.6	B	A
83.0	96.0	A	8	86.7	99.7	3	B
83.1	96.1	2	9	86.8	99.8	B	B
83.2	96.2	A	9	86.9	99.9	3	C
83.3	96.3	2	A	87.0	100.0	B	C
83.4	96.4	A	A	87.1	100.1	3	D
83.5	96.5	2	B	87.2	100.2	B	D
83.6	96.6	A	B	87.3	100.3	3	E
83.7	96.7	2	C	87.4	100.4	B	E
83.8	96.8	A	C	87.5	100.5	3	F
83.9	96.9	2	D	87.6	100.6	B	F
84.0	97.0	A	D	87.7	100.7	4	0
84.1	97.1	2	E	87.8	100.8	C	0
84.2	97.2	A	E	87.9	100.9	4	1
84.3	97.3	2	F	88.0	101.0	C	1
84.4	97.4	A	F	88.1	101.1	4	2
84.5	97.5	3	0	88.2	101.2	C	2
84.6	97.6	B	0	88.3	101.3	4	3
84.7	97.7	3	1	88.4	101.4	C	3
84.8	97.8	B	1	88.5	101.5	4	4
84.9	97.9	3	2	88.6	101.6	C	4
85.0	98.0	B	2	88.7	101.7	4	5
85.1	98.1	3	3	88.8	101.8	C	5
85.2	98.2	B	3	88.9	101.9	4	6
85.3	98.3	3	4	89.0	102.0	C	6
85.4	98.4	B	4	89.1	102.1	4	7
85.5	98.5	3	5	89.2	102.2	C	7
85.6	98.6	B	5	89.3	102.3	4	8
85.7	98.7	3	6	89.4	102.4	C	8
85.8	98.8	B	6	89.5	102.5	4	9
85.9	98.9	3	7	89.6	102.6	C	9
86.0	99.0	B	7	89.7	102.7	4	A
86.1	99.1	3	8	89.8	102.8	C	A
86.2	99.2	B	8	89.9	102.9	4	B
86.3	99.3	3	9	90.0	103.0	C	B
86.4	99.4	B	9	X	103.1	4	C
86.5	99.5	3	A	X	103.2	C	C

Illustration 2–12-2 Receiver Frequency Selection

(Continued on next page)

Freq. 74-90 MHz	Freq. 88-108 MHz	SW1	SW2	Freq. 74-90 MHz	Freq. 88-108 MHz	SW1	SW2
X	103.3	4	D	X	107.0	D	F
X	103.4	C	D	X	107.1	6	0
X	103.5	4	E	X	107.2	E	0
X	103.6	C	E	X	107.3	6	1
X	103.7	4	F	X	107.4	E	1
X	103.8	C	F	X	107.5	6	2
X	103.9	5	0	X	107.6	E	2
X	104.0	D	0	X	107.7	6	3
X	104.1	5	1	X	107.8	E	3
X	104.2	D	1	X	107.9	6	4
X	104.3	5	2	X	108.0	E	4
X	104.4	D	2				
X	104.5	5	3				
X	104.6	D	3				
X	104.7	5	4				
X	104.8	D	4				
X	104.9	5	5				
X	105.0	D	5				
X	105.1	5	6				
X	105.2	D	6				
X	105.3	5	7				
X	105.4	D	7				
X	105.5	5	8				
X	105.6	D	8				
X	105.7	5	9				
X	105.8	D	9				
X	105.9	5	A				
X	106.0	D	A				
X	106.1	5	B				
X	106.2	D	B				
X	106.3	5	C				
X	106.4	D	C				
X	106.5	5	D				
X	106.6	D	D				
X	106.7	5	E				
X	106.8	D	E				
X	106.9	5	F				

Illustration 2–12-3 Receiver Frequency Selection

2.5 RF Connections

Connect the RF load, an antenna or the input of an external power amplifier, to the type-N, RF output connector on the rear panel. VSWR should be 1.5:1 or better.

The RF monitor is intended primarily for a modulation monitor connection. Information gained through this connection can supplement that which is available on the transmitter front panel displays.
If your transmitter is equipped with the receiver option, connect the incoming RF to the RF IN connector.

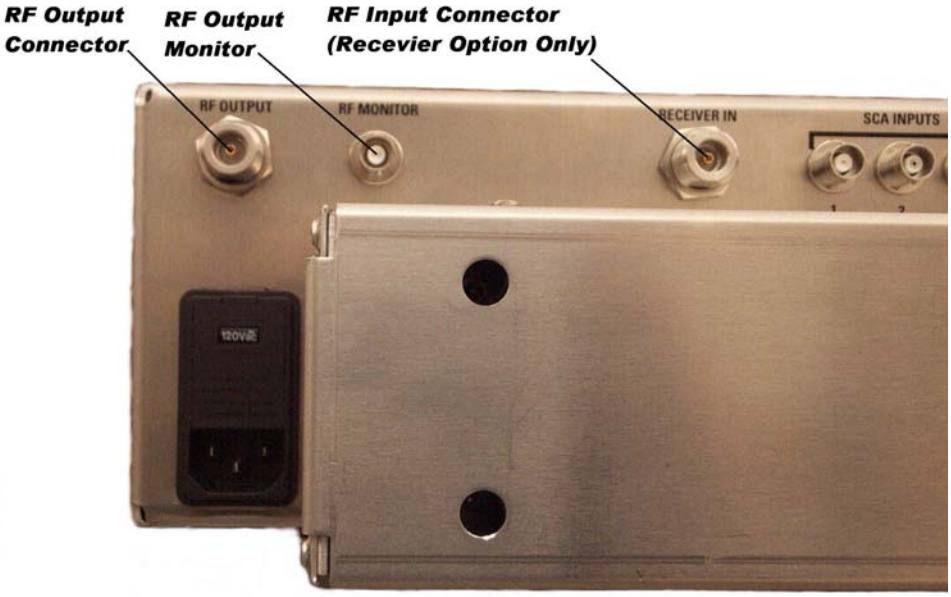

Illustration 2–13 RF Connections

2.6 Audio Input Connections

Attach audio inputs to the Left and Right XLR connectors on the rear panel. (The Left channel audio is used on Mono.) Pin 1 of the XLR connector goes to chassis ground. Pins 2 and 3 represent a balanced differential input with an impedance of about 50 kΩ . They may be connected to balanced or unbalanced left and right program sources.
The audio input cables should be shielded pairs, whether the source is balanced or unbalanced. For an unbalanced program source, one line (preferably the one connecting to pin 3) should be grounded to the shield at the source. Audio will then connect to the line going to pin 2.

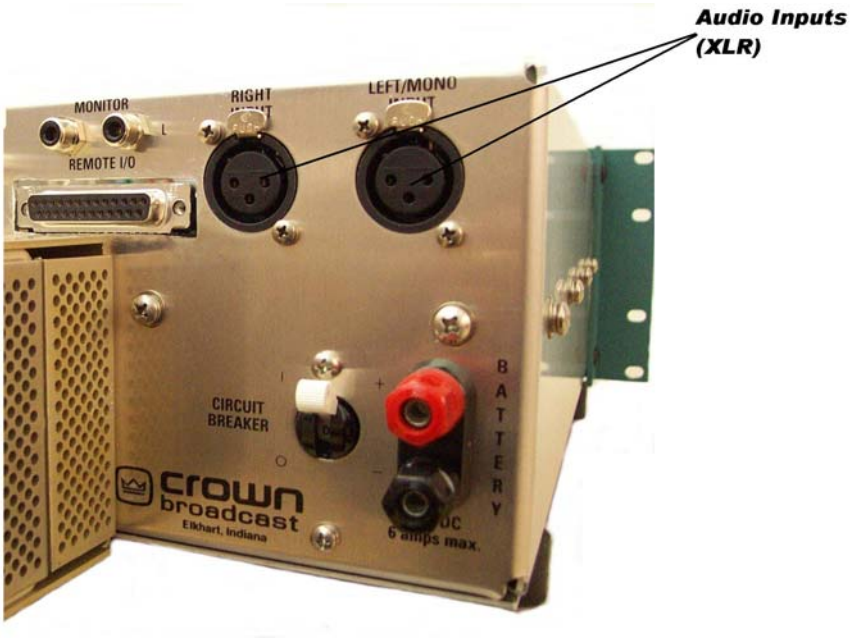

Illustration 2–14 XLR Audio Input Connectors

By bringing the audio return line back to the program source, the balanced differential input of the transmitter is used to best advantage to minimize noise. This practice is especially helpful if the program lines are fairly long, but is a good practice for any distance.
If the program source requires a 600 Ω termination, see the motherboard configuration chart on page 4-9 for the proper configuration of the jumpers.

2.7 SCA Input Connections

You can connect external SCA generators to the SCA In connectors (BNC-type) on the rear panel. The inputs are intended for the 60 kHz to 99 kHz range, but a lower frequency may be used if the transmitter is operated in Mono mode. (The 23 to 53 kHz band is used for stereo transmission.) For 7.5 kHz deviation (10% modulation), input of approximately 3.5–volts (peak-to-peak) is required.

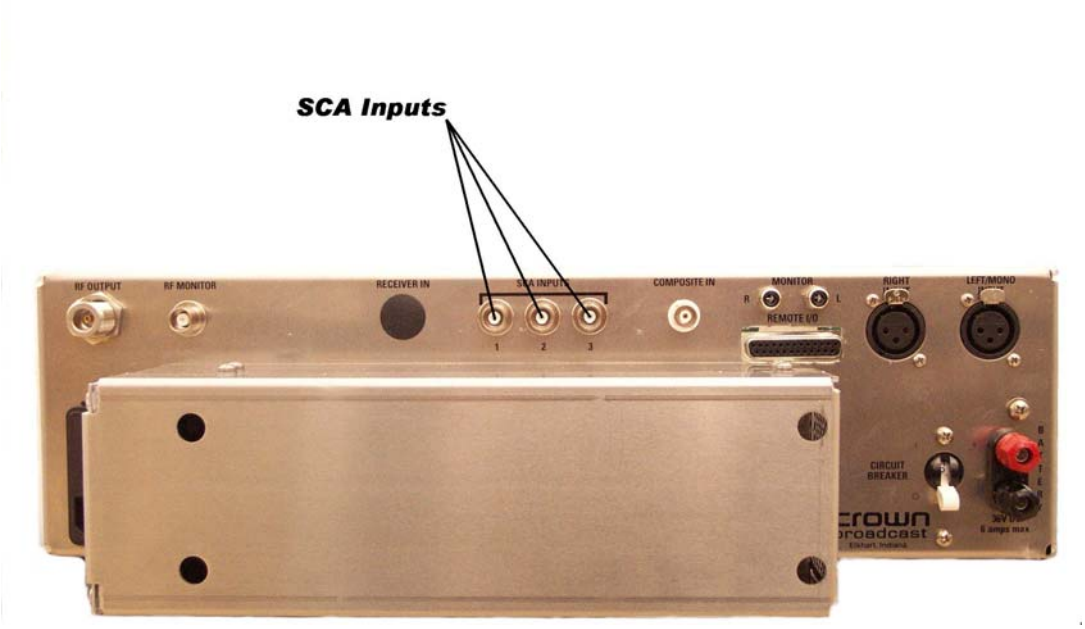

Illustration 2–15 SCA Input Connectors

2.8 Composite Input Connection

You may feed composite stereo (or mono audio) directly to the RF exciter bypassing the internal audio processor and stereo generator. To use the Crown transmitter as an RF Exciter only ("E" version or when using the "T" version with composite input), it is necessary to use the Composite Input section of the transmitter. This will feed composite stereo (or mono audio) directly to the RF exciter. In the "T" version, this will bypass the internal audio processor and stereo generator.

Input sensitivity is approximately 3.5–volt P-P for 75 kHz deviation.

1. Enable the Composite Input by grounding pin 14 of the Remote I/O connector (see Illustration 2–18).

2. Connect the composite signal using the Composite In BNC connector.

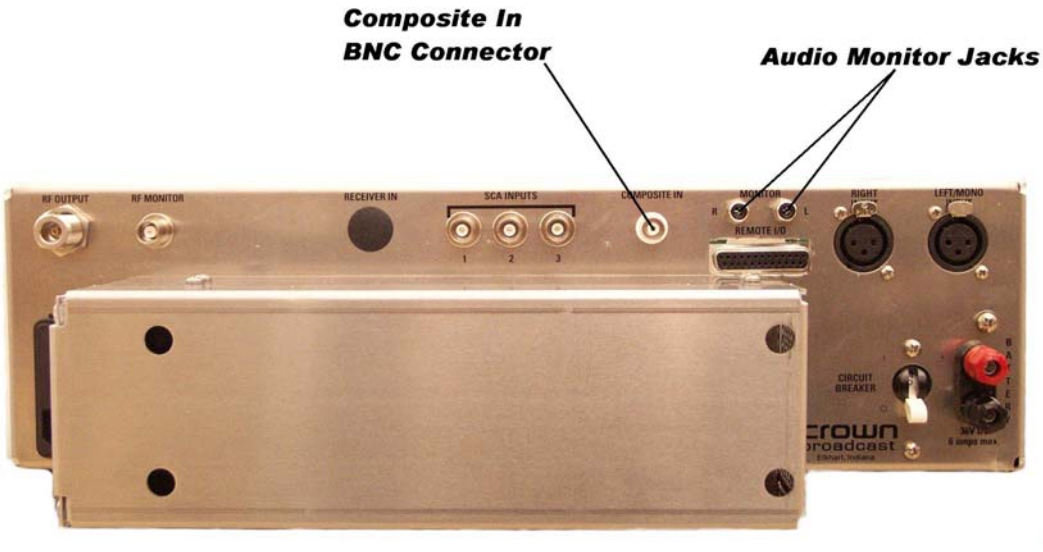

Illustration 2–16 Composite In and Audio Monitor Connections

2.9 Audio Monitor Connections

Processed, de-emphasized samples of the left and right audio inputs to the stereo generator are available at the Monitor jacks on the rear panel. The signals are suitable for feeding a studio monitor and for doing audio testing. De-emphasis is normally set for 75 µsec; set to 50 µsec by moving jumpers, HD201 and HD202, on the Audio Processor/Stereo Generator board.

2.10 Pre-emphasis Selection

Select the pre-emphasis curve (75 µsec, 50 µsec, 25 µsec, or Flat) by jumpering the appropriate pins of header HD1 on the Audio Processor/Stereo Generator board. If you change the pre-emphasis, change the de-emphasis jumpers HD201 and HD202 on the Audio Processor/Stereo Generator board to match.

2.11 Program Input Fault Time-out

You can enable an automatic turn-off of the carrier in the event of program failure. To enable this option, see illustration 2-18 on page 2-16. The time between program failure and carrier turn-off is set by a jumper (JP1) on the voltage regulator board (see page 6–14 for board location). Jumper pins 1 and 2 (the two pins closest to the edge of the board) for a delay of approximately 30 seconds; pins 3 and 4 for a 2–minute delay; pins 5 and 6 for a 4–minute delay, and pins 7 and 8 for an 8– minute delay.

2.12 Remote I/O Connector

Remote control and remote metering of the transmitter is made possible through a 25–pin, D-sub connector on the rear panel. (No connections are required for normal operation.)

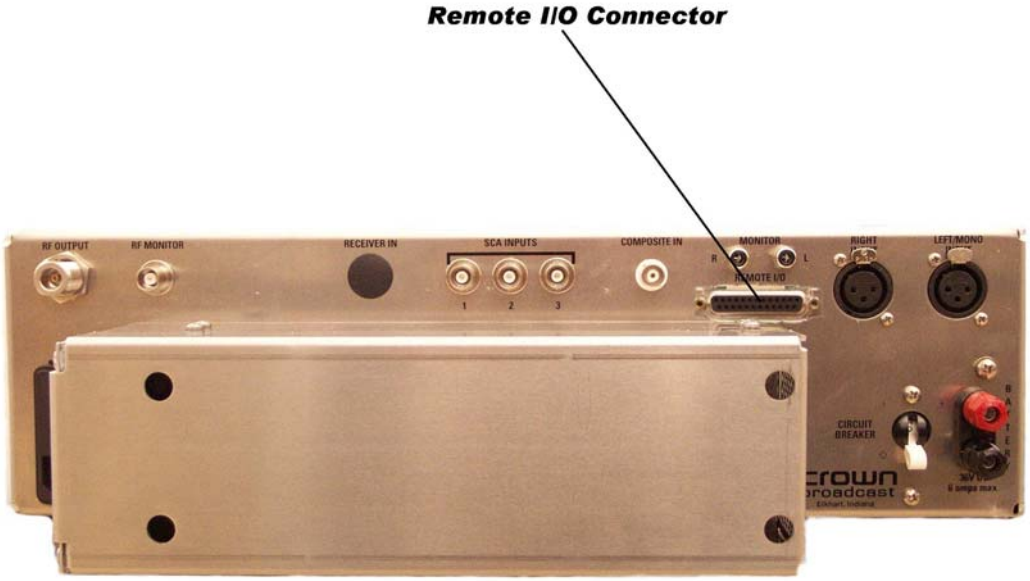

Illustration 2–17 Remote I/O Connector

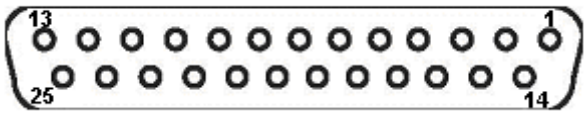

Illustration 2–18 Remote I/O Connector (DB-25 Female)

Pin Number	Function
1.	**Ground**
2.	**FMV Control**
3.	**Composite Out** (sample of stereo generator output)
4.	**FSK In** (Normally high; pull low to shift carrier frequency approximately 7.5 KHz. Connect to open collector or relay contacts of user-supplied FSK keyer.)
5.	**/Auto Carrier Off** (Pull low to enable automatic turnoff of carrier with program failure.)
6.	**Meter Battery** (Unregulated DC voltage; 5 VDC=50 VDC)
7.	**Meter RF Watts** (1 VDC = 100 Watts)
8.	**Meter PA Volts** (5 VDC = 50VDC)
9.	**Remote Raise** (A momentary switch, holding this pin low will slowly raise the RF output)
10.	**Remote Lower** (A momentary switch, holding this pin low will slowly lower the RF output)
11.	**Remote SWR** (A buffered metering output with a calculated reading of standing wave ratio in VDC.)
12.	**External ALC Control**
13.	**No Connection**
14.	**/Ext. Enable** (Pull low to disable the internal stereo generator and enable External Composite Input.)
15.	**38 KHz Out** (From stereo generator for power supply synchronization. For transmitter equipped with receiver option, this pin becomes the right audio output for an 8-ohm monitor speaker. 38 KHz is disabled.)
16.	**ALC**
17.	**/Carrier Off** (Pull low to turn carrier off)
18.	**Fault Summary** (line goes high if any fault light is activated.)
19.	**Meter PA Temperature** (5 VDC=100 degrees C.)
20.	**Meter PA Current** (1VDC=10 DC Amperes.)
21.	**Front Panel Voltmeter Input.**
22.	**No Connection.**
23.	**RDS RX**
24.	**RDS TX**
25.	**Ground**

Notes:

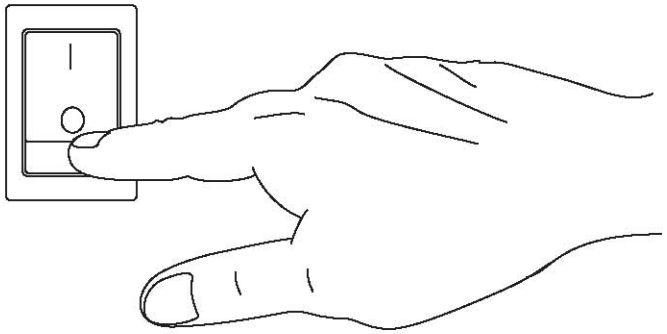

Section 3—Operation

This section provides general operating parameters of your transmitter and a detailed description of its front panel display.

3.1 Initial Power-up Procedures

These steps summarize the operating procedures you should use for the initial operation of the transmitter. More detailed information follows.

⚠ CAUTION

Possible equipment damage!

Before operating the transmitter for the first time, check for the proper AC line voltage setting and frequency selection as described in sections 2.2 and 2.3.

1. Turn on the DC breaker.

Illustration 3–1 DC Breaker

2. Turn on the main power switch.

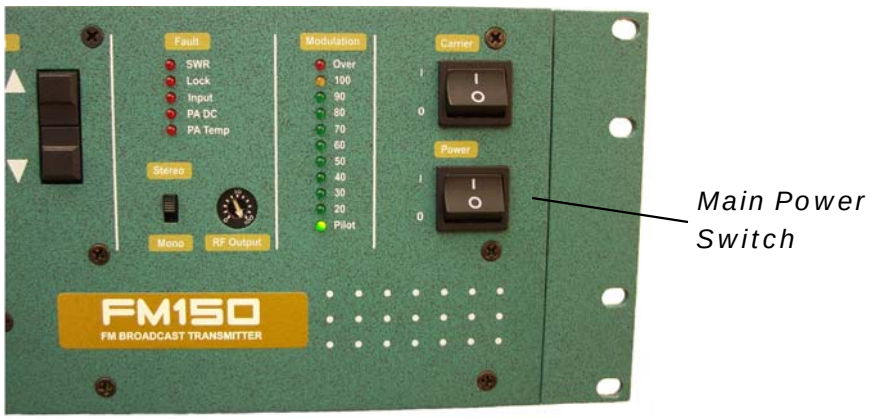

Illustration 3–2 Front Panel Power Switch

3. Verify the following:

   A. The bottom cooling fan runs continuously.
   B. The Lock Fault indicator flashes for approximately 5 seconds, then goes off.

4. Set the Input Gain switches for mid-scale wideband gain reduction on an average program level (see section 3.4).

5. Set the Processing control (see section 3.5; normal setting is “50”).

6. Set the Stereo-Mono switch to Stereo (see section 3.6).

7. Turn on the Carrier switch.

8. Check the following parameters on the front panel multimeter:

   A. RF Power should be 29–33 watts for the FM30, 145–165 watts for the FM150, and 300–330 watts for the FM300.

   B. SWR should be less than 1.1. (A reading greater than 1.25 indicates an antenna mismatch.

   C. ALC should be between 4.00 and 6.00 volts.

   D. PA DC Volts should be 26–30 volts for the FM30, 25–35 volts for the FM150, and 37–52 volts for the FM300. (Varies with antenna match, power, and frequency.)

   E. PA DC Amperes should be 1.5–2.5 amps for the FM30, 5.5–7.5 amps for the FM150, and 7.0–9.0 amps for the FM300. (Varies with antenna match, power, and frequency.)

   F. PA Temperature should initially read 20–35 degrees C (room temperature). After one hour the reading should be 35–50 degrees C.

   G. Supply DC Volts should display a typical reading of 45 V with the carrier on and 50 V with the carrier off for both the FM30 and FM150 products. For the FM300, the readings should be 65 V with the carrier on and 75 V with carrier off.

   H. Voltmeter should be reading 0.0.

   The remainder of this section describes the functions of the front panel indicators and switches.

3.2 Power Switches

3.2.1 DC Breaker

The DC breaker, on the rear panel, must be on (up) for transmitter operation, even when using AC power. Electrically, the DC breaker is located immediately after diodes which isolate the DC and AC power supplies.

3.2.2 Power Switch

The main on/off power switch controls both the 120/240 VAC and the DC battery power input.

3.2.3 Carrier Switch

This switch controls power to the RF amplifiers and supplies a logic high to the voltage regulator board, which enables the supply for the RF driver. In addition, the Carrier Switch controls the operating voltage needed by the switching power regulator.
A "Lock Fault" or a low pin 17 (/Carrier Off) on the Remote I/O connector will hold the carrier off. (See section 2.12.)

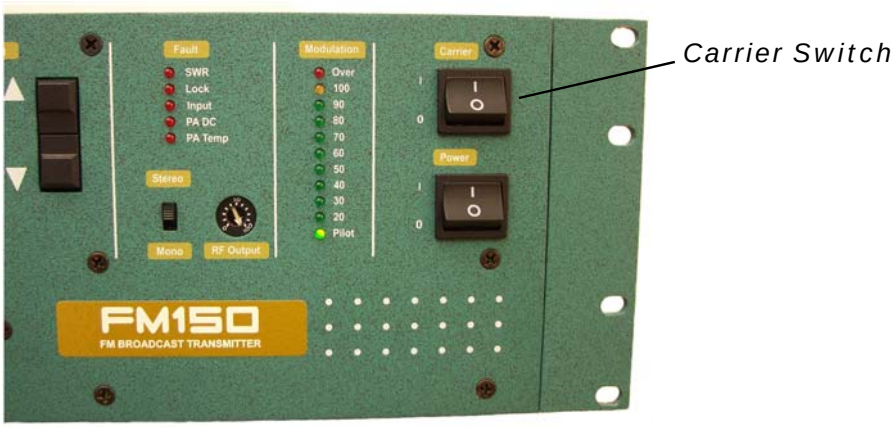

Illustration 3–3 Front Panel Carrier Switch

3.3 Front Panel Bar-Dot Displays

Bar-dot LEDs show audio input levels, wideband and highband audio gain control, and modulation percentage. Resolution for the gain control and modulation displays is increased over a conventional bar-graph display using dither enhancement which modulates the brightness of the LED to give the effect of a fade from dot to dot. (See section 4.7.)

3.3.1 Audio Processor Input

Two vertical, moving-dot displays for the left and right channels indicate the relative audio levels, in 3 dB steps, at the input of the audio processor. Under normal operating conditions, the left and right Audio Processor indicators will be active, indicating the relative audio input level after the Input Gain switches. During program pauses, the red Low LED will light.

The translator configuration shows relative audio levels from the included receiver.

3.3.2 Highband and Wideband Display

During audio processing, the moving-dot displays indicate the amount of gain control for broadband (Wide) and pre-emphasized (High) audio.
As long as program material causes activity of the Wideband green indicators, determined by the program source level and Input Gain switches, the transmitter will be fully modulated. (See section 3.4.)

The Wideband indicator shows short-term “syllabic-rate” expansion and gain reduction around a long-term (several seconds) average gain set. In the translator configuration, the Wideband indicator also shows relative RF signal strength.

Program material and the setting of the Processing control determine the magnitude of the short-term expansion and compression (the rapid left and right movement of the green light).

High-frequency program content affects the activity of the Highband indicator. With 75–µsec pre-emphasis, Highband processing begins at about 2 kHz and increases as the audio frequency increases. Some programs, especially speech, may show no activity while some music programs may show a great deal of activity.

3.3.3 Modulation Display

A 10–segment, vertical peak-and-hold, bar graph displays the peak modulation percentage. A reading of “100” coincides with 75 kHz deviation. The display holds briefly (about 0.1 seconds) after the peak. The “Pilot” indicator illuminates when the transmitter is in the stereo mode.

To verify the actual (or more precise) modulation percentage, connect a certified modulation monitor to the RF monitor jack on the rear panel.

3.4 Input Gain Switches

The “+6 dB” and “+12 dB” slide switches set audio input sensitivity according to the following table.

Normal Input Sensitivity	Switches	
	+6dB	+12dB
+10dBm	Down	Down
+4dBm	Up	Down
-2dBm	Down	Up
-8dBm	Up	Up

Illustration 3–4 Input Gain Switches

Find, experimentally, the combination of Input Gain switch settings that will bring the Wideband gain-reduction indicator to mid scale for “normal” level program material. The audio processor will accommodate a fairly wide range of input levels with no degradation of audio quality.

3.5 Processing Control

Two factors contribute to the setting of the Processing control: program material and personal taste. For most program material, a setting in the range of 40 to 70 provides good program density. For the classical music purist, who might prefer preservation of music dynamics over density, 10 to 40 is a good range. The audio will be heavily processed in the 70 to 100 range.

If the program source is already well processed, as might be the case with a satellite feed, set the Processing to “0” or “10”.

3.6 Stereo-Mono Switch

The Stereo-Mono slide switch selects the transmission mode. In Mono, feed audio *only to the left channel*. Although right-channel audio will not be heard as audio modulation, it will affect the audio processing.

3.7 RF Output Control

Set this control for the desired output power level. Preferably, set the power with an external RF wattmeter connected in the coaxial line to the antenna. You may also use the RF power reading on the digital multimeter.
The control sets the RF output voltage. Actual RF output power varies as the approximate square of the relative setting of the control. For example, a setting of “50” is approximately 1/4 full power.

3.8 Digital Multimeter

The four-digit numeric display in the center of the front panel provides information on transmitter operation. Use the “Up” and “down” push-buttons to select one of the following parameters. A green LED indicates the one selected.

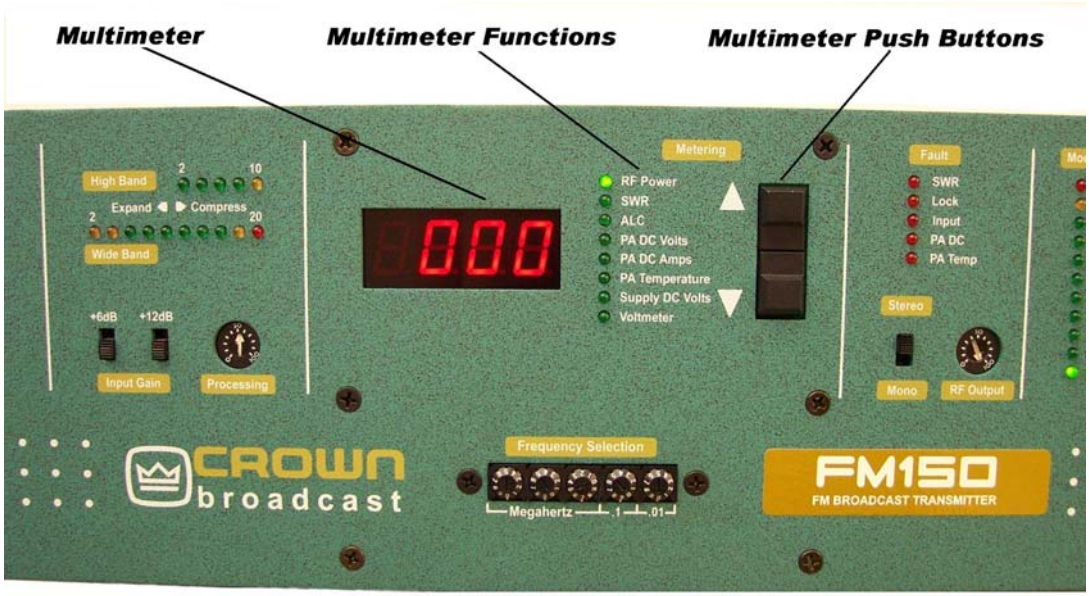

Illustration 3–5 Digital Multimeter

RF Power—Actually reads RF voltage squared, so the accuracy can be affected by VSWR (RF voltage-to-current ratio). See section 5.4 for calibration. Requires calibration with the RF reflectometer being used.

SWR—Direct reading of the antenna standing-wave ratio (the ratio of the desired load impedance, 50 ohms, to actual load).

ALC—DC gain control bias used to regulate PA supply voltage. With the PA power supply at full output voltage, ALC will read about 6.0 volts. When the RF output is being regulated by the RF power control circuit, this voltage will be reduced, typically reading 4 to 5.5 volts. The ALC voltage will be reduced during PA DC overcurrent, SWR, or LOCK fault conditions.

PA DC Volts—Supply voltage of the RF power amplifier.

PA DC Amps—Transistor drain current for the RF power amplifier.

PA DC Temperature—Temperature of the RF power amplifier heatsink in degrees C.

Supply DC Volts—Unregulated DC voltage at the input of the voltage regulators. For battery operation, this reading is the battery voltage minus a diode drop.

Voltmeter—Reads the voltage at a test point located on the front edge of the motherboard. A test lead connected to this point can be used for making voltage measurements in the transmitter. The test point is intended as a servicing aid; an alternative to an external test meter. Remember that the accuracy is only as good as the reference voltage used by the metering circuit. Servicing a fault affected by the reference affects the Voltmeter reading. The metering scale is 0 to 199.9 volts.

In the translator configuration, you can read a relative indication of RF signal strength numerically in the Voltmeter setting.

3.9 Fault Indicators

Faults are indicated by a blinking red light as follows:

SWR—Load VSWR exceeds 1.5:1. ALC voltage is reduced to limit the reflected RF power.

Lock—Frequency synthesizer phase-lock loop is unlocked. This indicator normally blinks for about five seconds at power turn-on. Whenever this light is blinking, supply voltages will be inhibited for the RF driver stage as well as for the RF power amplifier.

Input—The automatic carrier-off circuit is enabled (see sections 2.11 and 2.12) and the absence of a program input signal has exceeded the preset time. (The circuit treats white or pink noise as an absence of a program.)

PA DC—Power supply current for the RF power output amplifier is at the preset limit. ALC voltage has been reduced, reducing the PA supply voltage to hold supply current to the preset limit.

PA Temp—PA heatsink temperature has reached 50° C (122° F) for the FM30 and 80° C (176° F) for the FM150 and FM300.

At about 55° C (131°F) for the FM30 or 82°C (180° F) for the FM150 and FM300, ALC voltage begins to decrease, reducing the PA supply voltage to prevent a further increase in temperature. By 60° C (140° F) for the FM50 and 85° C (185° F) for the FM150 and FM300, the PA will be fully cut off. The heatsink fan (models FM150°and FM300 only) is proportionally controlled to hold the heatsink at 35 C (95° F). Above this temperature, the fan runs at full speed.

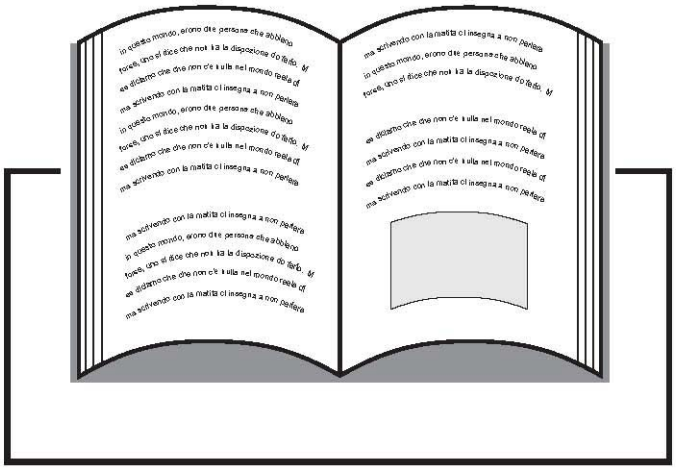

Section 4—Principles of Operation

This section discusses the circuit principles upon which the transmitter functions. This information is not needed for day-to-day operation of the transmitter but may be useful for advanced users and service personnel.

4.1 Part Numbering

As this section refers to individual components, you should be familiar with the part numbering scheme used.

The circuit boards and component placement drawings use designators such as “R1”, “R2”, and “C1.” These same designators are used throughout the transmitter on several different circuit boards and component placement drawings. When referencing a particular component it is necessary to also reference the circuit board that it is associated with.

4.2 Audio Processor/Stereo Generator Circuit Board

The audio board provides the control functions of audio processing-compression, limiting, and expansion, as well as stereo phase-error detection, pre-emphasis and generation of the composite stereo signal.

Illustration 6-4 and accompanying schematic may be useful to you during this discussion. The overall schematic for the audio board is divided into two sheets; one each for the processor and stereo generator sections of the board.

Reference numbers are for the left channel. Where there is a right-channel counterpart, reference number are in parenthesis.

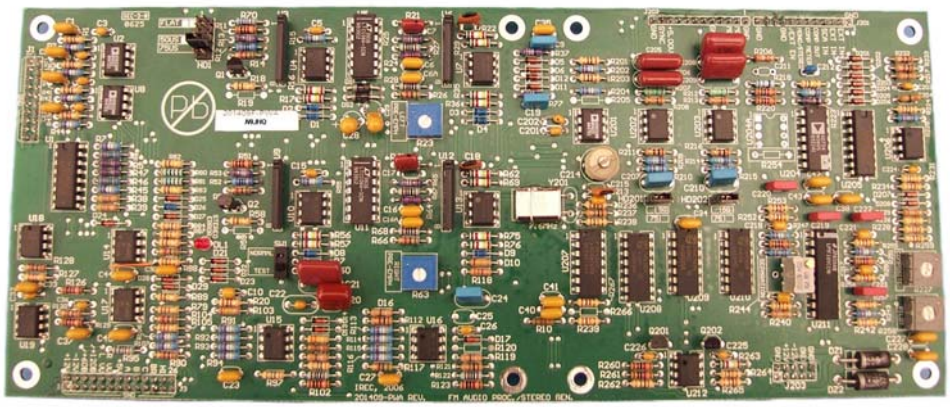

Illustration 4–1 Audio Processor/Stereo Generator Board

4.2.1 Audio Processor Section

Audio input from the XLR connector on the rear panel of the transmitter goes to instrument amplifier, U2 (U8). Two-bit binary data on the +6 dB and +12 dB control lines sets the gain of U2 (U8) to one of four levels in 6-dB steps. Gain of U2 is determined by R5, R6, or R7 (R45, R46, or R47) as selected by analog switch U1.

U3 (U9) is a THAT2180 voltage-controlled amplifier with a control-voltage-to-gain constant of 6.1 mV/dB. The 2180 is a current-in/current-out device, so signal *voltages* at the input and output will be zero. R11 converts the audio voltage at the output of U2 (U8) to current at the input of U3 (U9). U3 (U9) output current is converted to audio voltage by U4A (U10A).

U4B (U10B) is a unity-gain inverter. When the positive peaks at the output of U4A (U10A) or U4B (U10B) exceeds the gain-reduction threshold, U15 generates a 0.25 Volts-per-dB DC control bias, producing wide-band gain reduction for U3 (U9). The dB-linear allows a front-panel display of gain control on a linear scale with even distribution of dB.

Q1 (Q2) is a recover/expansion gate with a threshold about 18 dB below the normal program level. The amount of short-term expansion and time for gain recovery is controlled by the PROCESSING control, located on the front panel display board. (See section 3.5.)

Audio components above 15,200 Hz are greatly attenuated by eighth-order switched-capacitor elliptical filter, U5 (U11). The filter cut-off frequency is determined by a 1.52-MHz clock (100 x 15,200 Hz) signal from the stereo generator section of the board. The broadband signal level at the output of U5 (U11) is about 5 dB below that required for full modulation. (With normal program material, the 5 dB of headroom will be filled with pre-emphasized audio.)

Pre-emphasis in microseconds is the product of the capacitance of C7 (C17), multiplied by the current-gain of U6 (U12), times the value of R22 (R62). (For description of the device used for U6 (12), see explanation for U3 (U9) above.) For a 75 micro-seconds pre-emphasis, the gain of U6 (U12) will be about 1.11.

Selection of the pre-emphasis curve (75 µS, 50 µS, or Flat) is made by moving the jumper on HD1 to the pins designated on the board. Fine adjustment of the pre-emphasis is made with R23 (R63). (See section 5.1.)

For high-band processing, the peak output of U7A (U13A) and U7B (U13B) is detected and gain-reduction bias is generated, as with the broadband processor. The high-band processing, however, shifts the pre-emphasis curve rather than affecting overall gain. Peak audio voltages are compared to plus and minus 5-volt reference voltages at the outputs of U19A and U19B. This same reference voltage is used in the stereo generator section.

A stereo phasing error occurs when left and right inputs are of equal amplitude but opposite polarity. The most common cause is incorrect wiring of a left or right balanced audio line somewhere in the program chain-sometimes at the source of a recording. When this happens, all the audio is in the left-minus-right stereo subcarrier-none in the left-plus-right baseband. The error can go unnoticed by one listening on a stereo receiver, but the audio may disappear on a mono receiver. In normal programming there may be short-term polarity reversals of left versus right, either incidental or-for effect-intentional. A phase error of several seconds duration is processed by U14A and U14B and interpreted as a real error. During a phasing error the right-channel level is gradually reduced by 6 dB. For a listener to a stereo radio, the right-channel volume will be lower, while on a mono receiver there will be a reduction of volume.

NORMAL/TEST switch. In the TEST position, the stage gains are set to a fixed level. See section 6.2

4.2.2 Stereo Generator Section

Composite stereo signal is generated from left and right-channel audio inputs. This section also has the amplifier (U201) for an optional external composite input and provision for insertion of SCA signal(s).

Processed, pre-emphasized left and right audio is passed through third-order lowpass filters comprised of U202A (203A) and associated circuitry. The filters decrease the level of audio products below 30 Hz. This low-frequency roll off is necessary to prevent disturbance to the phase-lock loop in the RF frequency synthesizer by extremely low-frequency audio components. (See caution at section 2.8.)

U204 is a precision, four-quadrant, analog multiplier. The output of U204 is the product of 38 kHz applied to the Y input and the difference of left and right audio (L-R signal) applied to the X input. The resulting output is a double sideband, suppressed carrier/the L-R subcarrier.

Spectral purity of the stereo subcarrier is dependant on a pure 38-kHz sinewave at the multiplier input.

U207A and Y201 comprise a 7.6-MHz crystal oscillator from which the 19 and 38-kHz subcarriers are digitally synthesized. U207F is a buffer. The 7.6 MHz is divided by 5 in U208A to provide 1.52 Mhz, used by switched-capacitor filters U5 and U11 in the audio section. 3.8 MHz, 1.9 MHz, and 304 kHz are also derived from dividers in U208. Exclusive-OR gates, U210C and U210D, provide a stepped approximation of a 38-kHz sine wave. With the resistor ratios used, the synthesized sine wave has very little harmonic energy below the 7th harmonic. U210A and B generate the 19-kHz pilot subcarrier. U211 is a dual switched-capacitor filter, configured as second-order, low-pass filters, each one with a Q of 5. The 38 and 19-kHz outputs of pins 1 and 20, respectively, are fairly pure sine waves. Harmonic distortion products are better than 66 dB down-with a THD of less than 0.05%. SEPARATION control R244 sets the 38-kHz level at the Y input of U204.

Resistor matrix R219, R220, R221, and R223 sum the L+R audio with the L-R subcarrier to produce a current at the junction of R221 and R223 that will be converted to composite stereo (less pilot) at the output of summing amplifier U206A. SCA signal is also injected at the input of U206A. 19-kHz pilot is combined with composite stereo in summing amplifier U206B.

Analog switch U205, at the input of U206A, provides switching of left and right audio for stereo and mono modes. In the mono mode, right channel audio is disabled, and the left channel audio is increased from 45% modulation to 100%.

MON L and MON R outputs go to the AF Monitor jacks on the rear panel. R209+R210 (R214+R215) and C207 (C210) is a de-emphasis network. Processed, de-emphasized samples of the left and right audio are used for a studio monitor and for audio testing. Jumpers at HD201 (HD202) allow selection of 50-µsec or 75-µsec de-emphasis.

VR212A and B supply +7 volts and -7 volts, respectively. A 5-volt reference from the audio processor section supplies the subcarrier generators.

For an explanation of on-board adjustments see section 5.2.

4.3 RF Exciter Circuit

This circuit is also known as the Frequency Synthesizer. The Frequency Synthesizer part of the motherboard is no longer a separate module as was the case on older transmitters.The entire component side of the motherboard is a ground plane. Frequency selector switches located on the front panel of the transmitter establish the operating frequency. The VCO (voltage-controlled oscillator) circuitry is inside an aluminum case.

Illustration 6-6 and accompanying schematics can be used as reference in this discussion.

VCO1 operates at the synthesizer output frequency of 87 MHz to 108 MHz.
The frequency is controlled by a voltage applied to pin 8 of the VCO.
A sample of the RF comes from A2 and is fed to the PLL chip U13.
U13 is a phase-locked-loop frequency synthesizer IC. The 10.24 MHz from the crystal oscillator is divided to 10 kHz. Internal programmable dividers divide the 87 - 108 MHz RF to 10 kHz. Differences between the two signals produce error signals at pins 7 and 8 of U14.

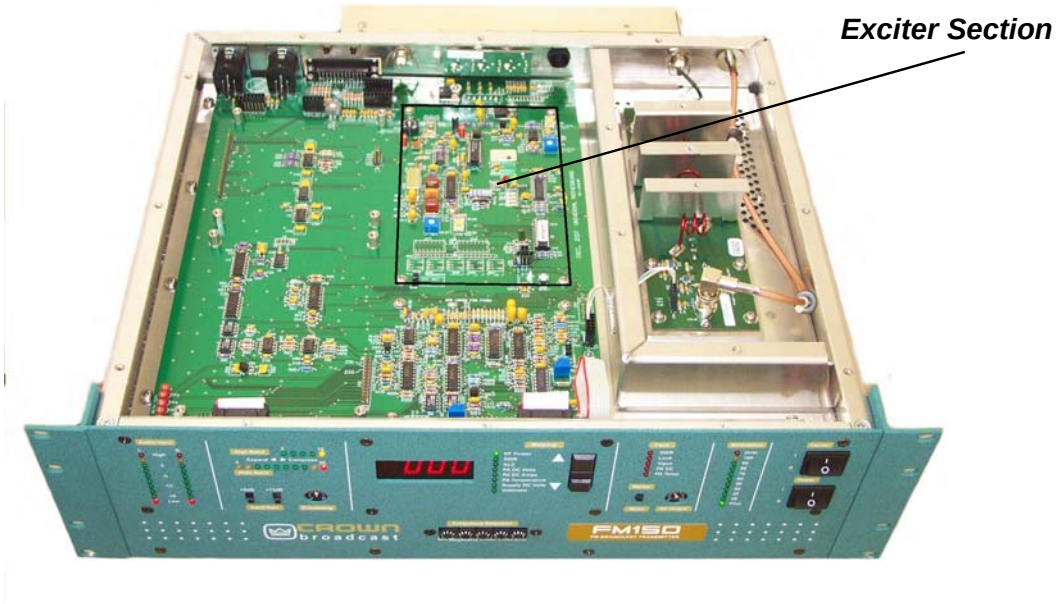

Illustration 4–2 Motherboard (Exciter Section)

Frequency selector switches are read by shift registers U17 and U18. Data from the shift registers is read by U16 which then programs the PLL (Phase Lock Loop) IC U13.

U14B is a differential amplifier and filter for the error signal. Audio that is out of phase with that appearing on the error voltage is introduced by U14A., allowing for greater loop bandwidth with less degradation of the low frequency audio response.

Lock and unlock status signals are available at the outputs of U15E and U15F respectively.

Modulation is introduced to the VCO though R72 and R122.

4.5 Metering Circuit

The ALC and metering circuitry is on the motherboard (see Illustration 6–6). This circuit processes information for the RF and DC metering, and produces ALC (RF level-control) bias. It also provides reference and input voltages for the digital panel meter, voltages for remote metering, fan control, and drive for the front-panel fault indicators.

Illustration 6–6 and accompanying schematics complement this discussion.

PA voltage and current come from a metering shunt on the power regulator board. The PAI input is a current proportional to PA current; R153 converts the current to voltage used for metering and control. A voltage divider from the PAV line is used for DC voltage metering.

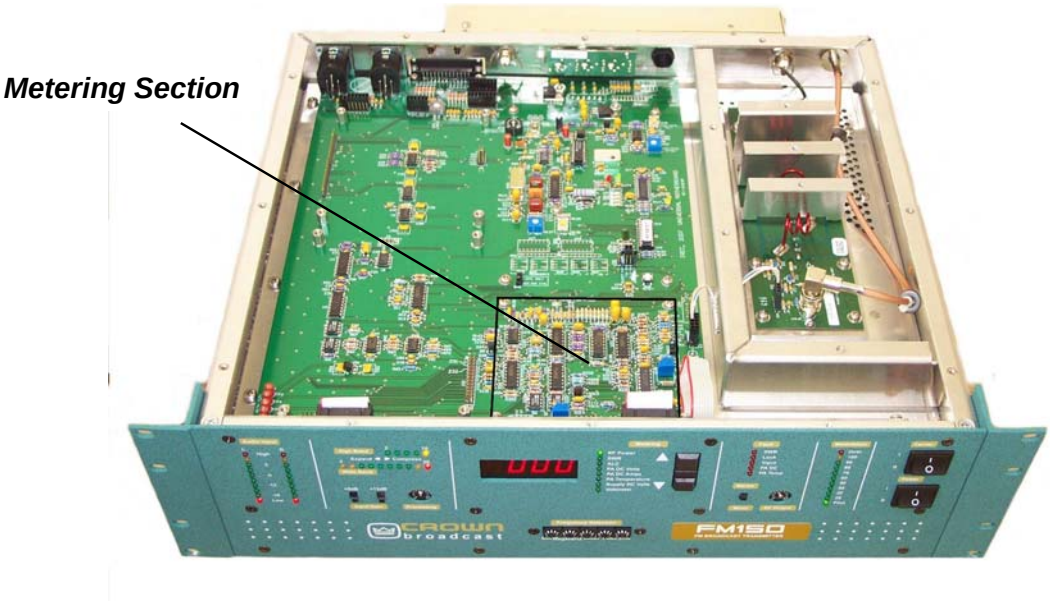

Illustration 4–3 Metering Circuit

U23A, U23B, and U24A, with their respective diodes, are diode linearity correction circuits. Their DC inputs come from diode detectors in the RF reflectometer in the RF low-pass filter compartment.

U24B, U24C, are components of a DC squaring circuit. Since the DC output voltage of U24C is proportional to RF voltage squared, it is also proportional to RF power.

U22C, U22A, U20A, and U22D are level sensors for RF power, reflected RF power, PA temperature, and external PA current, respectively. When either of these parameters exceeds the limits, the output of U22B will be forced low, reducing the ALC (RF level control) voltage, which, in turn, reduces the PA supply voltage.

The DC voltage set point for U22A (reflected RF voltage) is one-fifth that of U22C (forward RF voltage). This ratio corresponds to an SWR of 1.5:1 [(1+.2)/(1– .2)=1.5]. The U25 inverters drive the front panel fault indicators.

4.6 Motherboard

The motherboard is the large board in the upper chassis interconnecting the audio processor/stereo generator board or the optional receiver module or the Omnia digital audio processor to the RF exciter and metering circuits. The motherboard provides the interconnections for this boards, eliminating the need for a wiring harness, and provides input/output filtering. The RF exciter and Metering circuits are an integral part of the motherboard and are no longer separate boards as in past transmitter designs.

Also contained on the motherboard is the +5.00 volt reference and the composite drive Op amp and its associated circuitry.

The motherboard has configuration jumpers associated with different options that can be added at the time of order or at a later time as an upgrade. The motherboard configuration chart for these jumpers can be found on the following page.

Illustration 4–4 Configuration Jumpers

Motherboard Jumper Configuration Chart 4.6.1

Jumper	FMA "E"	FMA"T" 50KΩ input	FMA"T" 600Ω input	FMA "R"	FMA "Omnia" Analog input	FMA "Omnia" AES input
Z1	Short	Short	Short	Short	Short	Open
Z2	Short	Short	Short	Short	Short	Open
Z3	Open	Open	Short	Open	Open	Open
Z4	Open	Open	Open	Open	Open	Short
Z5	Open	Open	Short	Open	Open	Open
Z6	Open	Open	Open	Open	Open	Short
Z7	Open	Open	Short	Open	Open	Open
Z8	Open	Open	Short	Open	Open	Open
Z9	Short	Open	Open	Open	Open	Open
Z10	Short	Open	Open	Open	Open	Open
Z11	Short	Open	Open	Open	Open	Open
Z12	Short	Open	Open	Open	Open	Open
Z13	Short	Open	Open	Open	Open	Open
Z14	Short	Open	Open	Open	Open	Open
Z15	Open	Open	Open	Open	Open	Open
Z16	Open	Open	Open	Open	Open	Open
Z17	Open	Open	Open	Open	Open	Open
Z18	Open	Open	Open	Open	Open	Open
Z19	Open	Open	Open	Open	Open	Open
Z20	Open	Open	Open	Open	Open	Open
Z21	Open	Open	Open	Open	Open	Open
Z22	Open	Open	Open	Open	Open	Open
Z23	Short	Short	Short	Short	Short	Short
Z24	Short	Short	Short	Short	Short	Short
Z25	Short	Short	Short	Short	Short	Short
Z26	Short	Short	Short	Short	Short	Short
Z27	Short	Short	Short	Short	Short	Short
Z28	Short	Short	Short	Short	Short	Short
Z29	Short	Short	Short	Short	Short	Short
Z30	Short	Short	Short	Short	Short	Short
Z31	Open	Open	Open	Open	Open	Open
Z32	Short	Open	Open	Open	Open	Open
Z33	Short	Open	Short	Open	Open	Open
JMP1	Open	Open	Open	Open	Open	Open
JMP2	Open	Open	Open	Open	Open	Open

4.7 Display Circuit Board

The front-panel LEDs, the numeric display, the slide switches, and the processing and RF level controls are mounted on the display circuit board. To access the component side of the board, remove the front panel by removing 12 screws. The board contains circuits for the digital panel meter, modulation peak detector, and LED display drivers, as well as indicators and switches mentioned above.

Illustration 6–9 and accompanying schematic complement this discussion.

Left and right audio from input stages of the audio processor board (just after the Input Gain attenuator) go to the L VU and R VU input on the display board. Peak rectifiers U1A and U1B drive the left and right Audio Input displays. The LED driver gives a 3–dB per step display. The lowest step of the display driver is not used; rather a red LOW indicator lights when audio is below the level of the second step. Transistors Q1 and Q2 divert current from the LOW LEDs when any other LED of the display is lit.

Resolution of the linear displays, High Band, Wide Band, and Modulation, has been improved using dither enhancement. With dither, the brightness of the LED is controlled by proximity of the input voltage relative to its voltage threshold. The effect is a smooth transition from step to step as input voltage is changed. U6A, U6B, and associated components comprise the dither generator. Dither output is a triangular wave.

Composite stereo (or mono) is full-wave detected by diodes D5 and D6, U7, U13, Q3, and Q4 are components of a peak sample-and-hold circuit.

Oscillator, U9F, supplies a low-frequency square wave to the Fault indicators, causing them to flash on and off.

Digital multimeter inputs are selected with push buttons located to the right of the multimeter menu. Signals from the push buttons are conditioned by U9A and U9B. U10 is an up/down counter. Binary input to U11 from U10 selects a green menu indicator light, and lights the appropriate decimal point on the numeric readout. The binary lines also go to analog data selectors on the ALC/ metering board.

Processing control, R50, is part of the audio processor. (See section 4.2.)

The DPM IN and DPM REF lines are analog and reference voltage inputs to digital multimeter IC U12. They originate from analog data selectors on the ALC/ metering board.

4.8 Voltage Regulator Circuit Board

The voltage regulator board is the longer of two boards mounted under the chassis toward the front of the unit. It has switch-mode voltage regulators to provide +12, –12, and 20 volts. It also contains the program detection and automatic carrier control circuits.

Illustration 6–10 and accompanying schematic complement this discussion.

U3E and U3F convert a 38–kHz sine wave from the stereo generator into a synchronization pulse. In the transmitter, synchronization is not used, thus D9 is omitted.

U4 and U5 form a 20–volt switching regulator running at about 35 kHz. U4 is used as a pulse-width modulator; U5 is a high-side driver for MOSFET switch Q1. Supply voltage for the two IC's (approximately 15.5 volts) comes from linear regulator DZ2/Q5. Bootstrap voltage, provided by D10 and C14, allows the gate voltage of Q1 to swing about 15 volts above the source when Q1 is turned on. Current through the FET is sensed by R38 and R38A. If the voltage between pin 5 and 6 of U05 exceeds 0.23 volts on a current fault, drive to Q1 is turned off. Turn-off happens cycle by cycle. The speed of the turn-off is set by C13.

U6 is a switching regulator for both +12 volts and –12 volts. It runs at about 52 kHz. Energy for –12 volts is taken from inductor L2 during the off portion of the switching cycle. The –12 volts tracks the +12 volts within a few tenths of a volt. There will be no –12 volts until current is drawn from the +12 volts.

Q2, Q3, and Q4 form an active filter and switch, supplying DC voltage to the RF driver, when the Carrier switch is on.

The program detection circuit is made up of U1 and U2. U1A and U1D and associated circuitry discriminate between normal program material and white noise (such as might be present from a studio-transmitter link during program failure) or silence. U1A and surrounding components form a band-pass filter with a Q of 3 tuned to about 5 kHz. U1D is a first-order low-pass filter. Red and green LEDs on the board indicate the presence or absence of program determined by the balance of the detected signals from the two filters. U2 and U1C form a count-down timer. The time between a program fault and shutdown is selected by jumpering pins on header JP1. For times, see section 5.7. The times are proportional to the value of R21 (that is, times can be doubled by doubling the value of R21) and are listed in minutes.

4.9 Power Regulator Circuit Board

The power regulator board is the shorter of two boards mounted under the chassis toward the front of the unit. The board has the isolating diode for the battery input, the switch-mode voltage regulator for the RF power amplifier, and circuitry for PA supply current metering.

Illustration 6–10 and accompanying schematic complement this discussion.

Diode D4, in series with the battery input, together with the AC-supply diode bridge, provides diode OR-ing of the AC and DC supplies.

U1 and U2 form a switching regulator running at about 35 kHz. U1 is used as a pulse-width modulator; U2 is a high-side driver for MOSFET switch Q1. Power for the two IC's comes from the 20–volt supply voltage for the RF driver (available when the Carrier switch is on). The voltage is controlled at 16 volts by zener diode DZ1. Bootstrap voltage provided by D2 and C9 allows the gate voltage of Q1 to swing about 16 volts above the source when Q1 is turned on. Current through the FET is sensed by R12A and R12B. If the voltage from pin 5 to 6 of U2 exceeds 0.23 volts on a current fault, drive to Q1 is turned off. This happens on a cycle-by-cycle basis. The speed of the turnoff is set by C5.

U3 and Q2 are used in a circuit to convert the current that flows through metering shunt, R19, into a current source at the collector of Q3. Forty milli-volts is developed across R19 for each amp of supply current (.04 ohms x 1 amp). Q3 is biased by U3 to produce the same voltage across R16. The collector current of Q3 is the same (minus base current) as that flowing through R22 resulting in 40 microamperes per amp of shunt current. R5 on the metering board converts Q3 collector current to 0.1 volt per amp of shunt current (.04 ma X 2.49 k). (See section 5.4.)

4.10 RF Driver/Amplifier (FM30)

The RF Driver/Amplifier assembly is mounted on a 100 mm x 100 mm plate in the under side of the chassis.

Illustration 6-14 and accompanying schematic complement this discussion.

The driver amplifies the approximate 20 milliwatts from the frequency synthesizer to 30 watts. An MHW6342T hybrid, high-gain, wideband amplifier, operating at about 20 volts, provides about one watt of drive to a single BLF246 MOSFET amplifier. The BLF245 stage operates from a supply voltage of 28 volts in the FM30.
The circuit board has components for input and output coupling and for power supply filtering.

4.11 RF Driver (FM150/FM300)

The RF Driver assembly is mounted on a 100 mm x 100 mm plate in the under side of the chassis.

Illustration 6-14 and accompanying schematic complement this discussion.

The driver amplifies the approximate 20 milliwatts from the frequency synthesizer to about 8 watts to drive the RF power amplifier. An MHW6342T hybrid, high-gain, wideband amplifier, operating at about 20 volts, provides about one watt of drive to a single BLF245 MOSFET amplifier. The BLF245 stage operates from a supply voltage of approximately 20 volts.

The circuit board provides for input/output coupling and for power supply filtering.

4.12 RF Amplifier (FM150/FM300)

The RF power amplifier assembly is mounted on back of the chassis with four screws, located behind an outer cover plate. Access the connections to the module by removing the bottom cover of the unit. The RF connections to the amplifier are BNC for the input and output. Power comes into the module through a 5–pin header connection next to the RF input jack.

Illustration 6-12 and accompanying schematic complement this discussion.

The amplifier is built around a ST MicroElectronics SD2942, a dual power MOSFET rated for 50 volts DC and a maximum power of about 350 watts. When biased for class B, the transistor has a power gain of about 20 dB. (It is biased below class B in the transmitter.)

Input transformer, T11, is made up of two printed circuit boards. The four-turn primary board is separated from the one-turn secondary by a thin dielectric film. R12–R17 are for damping. Trim pot R11 sets the bias.

Output transformer, T21, has a one-turn primary on top of the circuit board and a two-turn secondary underneath. Inductors L21 and L22 provide power line filtering.

4.13 Chassis

The AC power supply components, as well as the bridge rectifier and main filter capacitor, are mounted on the chassis. Switching in the power-entry module configures the power transformer for 100, 120, 220, or 240 VAC; see section 2.2 for switching and fuse information. A terminal strip with MOV voltage-surge suppressors and in-rush current limiters is mounted on the chassis between the power entry module and the toroidal power transformer.

WARNING

Shock hazard!

Do not attempt to short the capacitor terminals. A bleeder resistor will discharge the capacitor in approximately one minute after shutdown.

The main energy-storage/filter capacitor, C01, is located between the voltage and power regulator boards. The DC voltage across the capacitor will be 45–55 volts (FM30 and FM150) or 65–70 volts (FM300) when the carrier is on.

4.14 RF Output Filter & Reflectometer

The RF low-pass filter/reflectometer are located in the right-hand compartment on the top of the chassis. See Illustration 6–13 and accompanying schematic for more information.

A ninth-order, elliptic, low-pass filter attenuates harmonics generated in the power amplifier. The capacitors for the filter are circuit board pads.

The reflectometer uses printed circuit board traces for micro-strip transmission lines. Transmission line segments (with an impedance of about 82 ohms) on either side of a 50–ohm conductor provide sample voltages representative of the square root of forward and reverse power.

DC voltages, representative of forward and reflected power, go through a bulkhead filter board to the motherboard, then to the metering board, where they are processed for power control and metering and for SWR metering and protection.

4.15 Receiver Circuit Board Option

This option allows the transmitter to be used as a translator. The receiver board receives terrestrially fed RF signal and converts it to composite audio which is then fed into the exciter board. Microprocessor controlled phase lock loop technology ensures the received frequency will not drift, and multiple IF stages ensure high adjacent channel rejection. Refer to illustrations 4–6, 6–16 and its schematic for the following discussion.

The square shaped metal can located on the left side of the receiver board is the tuner module. The incoming RF signal enters through the BNC connector (top left corner) and is tuned through the tuner module. Input attenuation is possible with the jumper labeled “LO” “DX”, on the top left corner of the receiver board. Very strong signals can be attenuated 20 dB automatically by placing the jumper on the left two pins (“LO” position). An additional 20 dB attenuation is also available with the jumpers in the top left corner of the board. The frequencies are tuned by setting switches SW1 and SW2 (upper right corner). These two switches are read upon power up (or by momentarily shorting J7) by the microprocessor (U4). The microprocessor then tunes the tuner module to the selected frequency. The frequency range is 87.9 Mhz at setting “00” to 107.9 Mhz at setting “64”. Other custom ranges are available.

Located in the lower left-hand corner of the Receiver Module is a 3.5mm headphone jack. Demodulated Left and Right audio is present at this jack. A regular pair of 32 ohm stereo headphones, such as the types used with portable audio devices, can be used to monitor the audio on the receiver module.

Illustration 4–5 Receiver Module

When a stereo signal is present, LED 3 illuminates which indicates that left and right audio is available. Then the stereo signals go to gain stages and out to the RCA jacks on the back of the cabinet. These can be used for off-air monitoring of the audio signal. Incoming frequency can be monitored from the frequency monitor BNC jack on the back. The stereo buffer, stereo decoder, and gain stages and have no effect on the signal that goes through the transmitter.

The power supply is fairly straight forward. The incoming 12 volt supply goes to a 7809, 9 volt regulator (VR1) which supplies all 9–volt needs on the board. The 9 volts also supplies a 7805, 5 volt regulator (VR2) which supplies all 5–volt needs on the board. Plus and minus 12 volts from the motherboard is filtered and supplies various needs on the board. Finally there is a precision reference voltage. Two 2.5 volt reference shunts act very much like a very accurate zener diode to provide a precision 5 volt supply to the metering board.

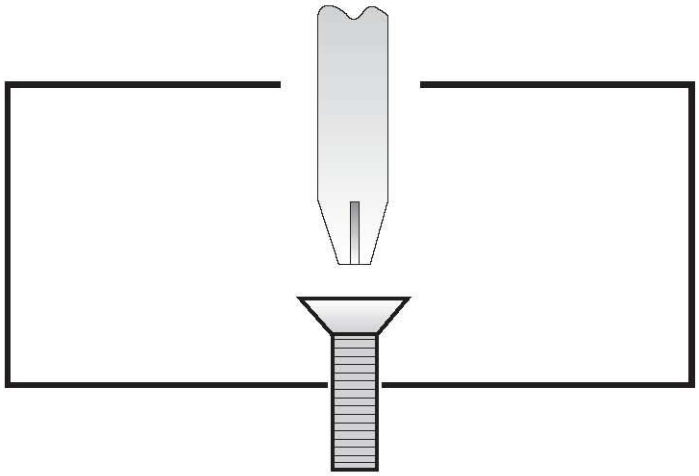

Section 5—Adjustments and Tests

This section describes procedures for (1) advanced users who may be interested in customizing or optimizing the performance of the transmitter and (2) service personnel who want to return the transmitter to operational status following a maintenance procedure.

5.1 Audio Processor Adjustments

5.1.1 Pre-Emphasis Selection

Select the pre-emphasis curve (75 µsec, 50 µsec, 25 µsec, or Flat) by jumpering the appropriate pins of header HD1 on the audio processor/stereo generator board. (See section 2.9.) If you change the pre-emphasis, change the de-emphasis jumpers, HD201 and HD202 on the audio processor/stereo generator board, to match. (See section 2.8.)

5.1.2 Pre-Emphasis Fine Adjustment

Trim potentiometers, R23 and R63, (for left and right channels, respectively) provide for fine adjustment of the pre-emphasis. Set the potentiometers to bring the de-emphasized gain at 10 kHz equal to that of 400 Hz. (At the proper setting, 15.0 kHz will be down about 0.7 dB.)

When making these adjustments, it is important that you keep signal levels below the processor gain-control threshold.

A preferred method is to use a precision de-emphasis network in front of the audio input. Then, use the non-de-emphasized (flat) output from the FM modulation monitor for measurements.

5.2 Stereo Generator Adjustments

5.2.1 Separation

Feed a 400–Hz sine wave into one channel for at least 70% modulation. Observe the classic single-channel composite stereo waveform at TP301 on the RF Exciter circuit board. Adjust the Separation control R244 for a straight centerline.
Since proper adjustment of this control coincides with best stereo separation, use an FM monitor to make or confirm the adjustment.

5.2.2 Composite Output

You can make adjustments to the composite output in the following manner:

Using a Modulation Monitor

1. Set the Stereo-Mono switch to Mono.

2. Check that the setting of the Modulation compensation control (see illustration 2–9) on the RF Exciter circuit , falls within the range specified for the frequency of operation. (See section 2.3.1.)

3. Feed a sine wave signal of about 2.5 kHz into the left channel at a level sufficient to put the wideband gain-reduction indicator somewhere in the middle of its range.

4. Set the Composite level control to produce 90% modulation as indicated on an FM monitor.

5. Apply pink noise or program material to the audio inputs and confirm, on both Mono and Stereo, that modulation peaks are between 95% and 100%.

5.2.3 19–kHz Level

Adjust the 19–kHz pilot for 9% modulation as indicated on an FM modulation monitor. (The composite output should be set first, since it follows the 19–kHz Level control.)

5.2.4 19–kHz Phase

1. Apply a 400–Hz audio signal to the left channel for at least 70% modulation.

2. Look at the composite stereo signal at TP301 on the RF Exciter circuit board with an oscilloscope, expanding the display to view the 19–kHz component on the horizontal centerline.

3. Switch the audio to the right-channel input. When the 19–kHz Phase is properly adjusted, the amplitude of the 19–kHz will remain constant when switching between left and right.

4. Recheck the separation adjustment as described in section 5.2.1.

5.3 Frequency Synthesizer Adjustments

5.3.1 Frequency (Channel) Selection

Refer to section 2.3.

5.3.2 Modulation Compensator

Refer to section 2.3.1

5.3.3 Frequency Measurement and Adjustment

Next to the 10.24–MHz VCXO in the RF Exciter circuit on the motherboard, is a 50K potentiometer (R101). Use R101 to set the frequency of the 10.24–MHz VCXO while observing the output frequency of the synthesizer.

Use one of two methods for checking frequency:

1. Use an FM frequency monitor.

2. Couple a frequency counter of known accuracy to the output of the synthesizer and observe the operating frequency.

5.3.4 FSK Frequency Offset Control

An FSK signal (used for automatic identification of FM repeaters) shifts the frequencies of the 10.24–MHz VCXO reference oscillator and the VCO.

Ground pin 4 on the DB25 connector located on the back panel of the transmitter. This will shift the operating frequency. Adjust R224 for an offset of the operating frequency of about 6 kHz. Un-grounding pin 4 will cause the operating frequency to return to normal.

Use one of two methods for checking frequency:

1. Use an FM frequency monitor.

2. Couple a frequency counter of known accuracy to the output of the synthesizer and observe the operating frequency.

5.4 Metering Adjustments

5.4.1 Power Calibrate

While looking at RF Power on the digital panel meter, set the Power Calibrate trim potentiometer (R215) to agree with an external RF power meter.

5.4.2 Power Set

With the front panel RF Output control fully clockwise, adjust the Power Set trim pot (R55) to 10% more than the rated power (33 W for FM30, 165 W for FM150, 330 W for FM300) as indicated on an accurate external watt meter. If the authorized power is less than the maximum watts, you may use the Power Set to limit the range of the RF Output control.

5.4.3 SWR Calibrate

When the Carrier switch is off, or the RF power is less than about 5 watts, the SWR circuit automatically switches to a calibrate-check mode. (See section 4.5 for more information.) Set the digital panel meter to read SWR. With the Carrier switch off, set the SWR CAL trim pot (R66) to read 1.03.

5.4.4 PA Current Limit

Since it may not be practical to increase the PA current to set the PA Current Limit control, you may use this indirect method.

With the carrier turned off, look at the DC voltage at the right end of R186 in the Metering circuit on the motherboard. The current limit, in amperes, will be 0.35 amps higher than ten times this voltage. For example, for a current limit of 7.35 amps, adjust the PA Current Limit control for 0.7 volts at R186 ; or 0.565 volts for 6.0 amps. Set the current limit for 4 amps (FM50), 7 amps (FM150), or 9.5 amps (FM300).

5.5 Motherboard Configuration

See section 4.6.1 for motherboard jumper configuration.

5.6 Display Modulation Calibration

The Modulation Calibrate trim pot sets the sensitivity of the front panel Modulation bar graph display.

This adjustment may be made only after the Output trim pot on the Audio Processor/Stereo Generator board has been set. (See section 5.2.2.)

Set the Stereo-Mono switch to Mono.

Feed a sine wave source of about 2.5 kHz into the left channel at a level sufficient to put the wideband gain-reduction indicator somewhere in the middle of its range.

Set the Modulation Calibrate trim pot so that the “90” light on the front panel Modulation display just begins to light.

5.7 Voltage Regulator Adjustments

JP1, a 10–pin header on the Voltage Regulator board, sets the time between program failure and carrier turnoff. Pins 1 and 2 are the two pins closest to the edge of the board. The times are approximate. Sections 2.11, 2.12, and 4.8 contain further information.

1. Short pins 1 and 2 for a 30–second delay.

2. Short pins 3 and 4 for a 2–minute delay.

3. Short pins 5 and 6 for a 4–minute delay.

4. Short pins 7 and 8 for an 8–minute delay.

You may select other times by changing the value of R21. The time is proportional to the resistance.

5.8 Bias Set (RF Power Amplifier)

The Bias Set trim pot is located inside the PA module on the input circuit board. Set the trim pot to its midpoint for near-optimum bias.

5.9 Performance Verification

Measure the following parameters to receive a comprehensive characterization of transmitter performance:

- Carrier frequency
- RF output power
- RF bandwidth and RF harmonics (see section 5.12)
- Pilot frequency, phase, and modulation percentage
- Audio frequency response
- Audio distortion
- Modulation percentage
- FM and AM noise
- Stereo separation between left and right
- Crosstalk between main channel and subcarrier
- 38–kHz subcarrier suppression
- In addition to the above tests, which pertain to signal quality, a complete check of the unit will include items listed in section 5.21.

5.9.1 Audio Proof-of-Performance Measurements

References to “100%” modulation assume 9% pilot and 91% for the remainder of the composite stereo signal.

Because the audio processing threshold is at 90% modulation, it is not possible to make audio proof-of-performance measurements at 100% modulation through the audio processor. Instead, data is taken at a level below the audio processing threshold at 80% modulation.

5.9.2 De-emphasis Input Network

A precision de-emphasis network, connected between the test oscillator and the audio input of the transmitter, can be very helpful when making the audio measurements. Note that the input impedance of the transmitter or the source impedance of the test oscillator can affect network accuracy. With the de-emphasis network, oscillator level adjustments need only accommodate gain errors, instead of the whole pre-emphasis curve.

5.10 Carrier Frequency

Carrier frequency is measured at the output frequency with a frequency monitor or suitable frequency counter.

To adjust frequency, see section 5.3.3. (FCC tolerance +/– 2000 Hz per FCC Part 73.1540 and 73.1545.)

5.11 Output Power

The output power reading on the front panel display should be 90–105% of the actual value. For a more precise measurement, use a watt meter in the RF output line. See sections 5.4.1 and 5.4.2 for setting power.

5.12 RF Bandwidth and RF Harmonics

You can observe RF bandwidth and spurious emissions with an RF spectrum analyzer.

In the Stereo mode, feed a 15.0–kHz audio signal into one channel to provide 85% modulation as indicated on a monitor. Doing so produces 38% main, 38% stereo subcarrier, and 9% pilot per FCC Part 2.1049. As an alternative, use pink noise into one channel.

Using a spectrum analyzer, verify the following (per FCC 73.317):

1. Emissions more than 600 kHz from the carrier are at least 43 + 10log(power, in watts) dB down (58 dB for 30 watts, 65 dB for 150 watts, 68 dB for 300 watts). The scan should include the tenth harmonic.

2. Emissions between 240 kHz and 600 kHz from the carrier are down at least 35 dB.

3. Emissions between 120 kHz and 240 kHz from the carrier are down at least 25 dB.

5.13 Pilot Frequency

The pilot frequency should be within 2 Hz of 19 kHz. (FCC Part 73.322.) Using a frequency counter, measure 1.9 MHz at pin 13 of U208 on the Audio Processor/Stereo Generator board. A 200–Hz error here corresponds to a 2–Hz error at 19 kHz. If the frequency is off by more than 50 Hz, you may change the value of C213. (Changing C213 from 56 pF to 68 pF lowers the 1.9 MHz by about 35 Hz.)

5.14 Audio Frequency Response

For the response tests, take the readings from an FM modulation monitor.
Make audio frequency response measurements for left and right channels at frequencies of 50 Hz, 100 Hz, 400 Hz, 1 kHz, 5 kHz, 10 kHz, and 15 kHz. See sections 5.9.1 and 5.9.2.

5.15 Audio Distortion

Make distortion measurements from the de-emphasized output of an FM modulation monitor.

Make audio distortion measurements for left and right channels at frequencies of 50 Hz, 100 Hz, 400 Hz, 1 kHz, 5 kHz, 10 kHz, and 15 kHz. See sections 5.9.1 and 5.9.2.

5.16 Modulation Percentage

While feeding an audio signal into the left channel only, confirm that the total modulation percentage remains constant when switching between Mono and Stereo.

Measure modulation percentage with an FM modulation monitor. See section 5.2.2.

19–kHz pilot modulation should be 9%.

5.17 FM and AM Noise

Take noise readings from a de-emphasized output of a modulation monitor.

5.18 Stereo Separation

Make left-into-right and right-into-left stereo separation measurements with an FM modulation monitor for frequencies of 50 Hz, 100 Hz, 400 Hz, 1 kHz, 5 kHz, 10 kHz, and 15 kHz.

5.19 Crosstalk

For stereo crosstalk measurements, both left and right channels are fed at the same time. For best results, there needs to be a means of correcting small imbalances in levels and phase. The balance is made at 400 Hz.

5.19.1 Main Channel Into Sub

Feed the left and right channels in phase with audio (L+R) at 50 Hz, 100 Hz, 400 Hz, 1 kHz, 5 kHz, 10 kHz, and 15 kHz at 100% modulation, while observing the stereo subcarrier (L-R) level on an FM modulation monitor.

5.19.2 Sub Channel Into Main

Feed the audio into the left and right channel as above, with the exception of reversing the polarity of the audio of one channel (L-R input). Using the frequencies of 5.19.1 above, observe the main channel (L+R) level with a modulation monitor.

5.20 38–kHz Subcarrier Suppression

With no modulation, but in the Stereo mode, the 38–kHz subcarrier, as indicated on an FM modulation monitor, should be down at least 40 dB.

5.21 Additional Checks

In addition to the tests and adjustments mentioned in this section, the following checks ensure a complete performance appraisal of the transmitter:

1. Perform a physical inspection, looking for visible damage and checking that the chassis hardware and circuit boards are secure.

2. Check the functionality of switches and processing control.

3. Verify that all indicators function.

4. Check the frequency synthesizer lock at 80 MHz and 110 MHz.

5. Measure the AC line current with and without the carrier on.

6. Perform a functional test of the SCA input, Monitor outputs, and the monitor and control function at the 15–pin, D-sub connector.

7. Test the functionality of the FSK circuit.

8. Check the operation and timing of the automatic carrier-off circuitry associated with program failure.

9. Check all metering functions.

10. Test ALC action with PA current overload, SWR, and PLL lock.

NOTE:
FCC type acceptance procedures call for testing the carrier frequency over the temperature range of 0–50 degrees centigrade, and at line voltages from 85% to 115% of rating. (See FCC Part 2.1055.)

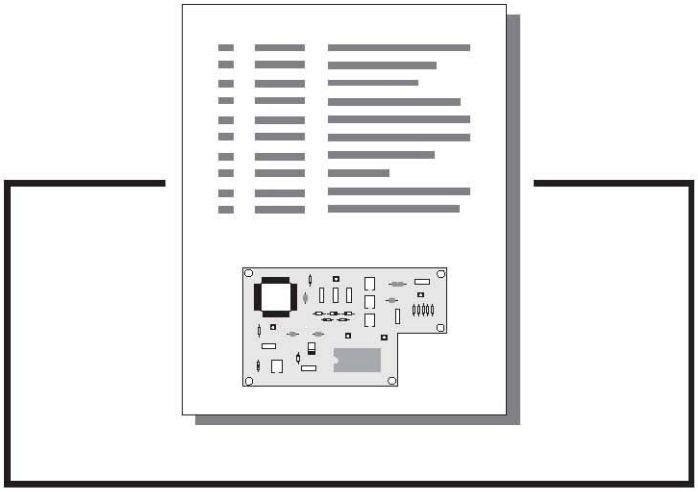

Section 6—Reference Drawings

The illustrations in this section may be useful for making adjustments, taking measurements, troubleshooting, or understanding the circuitry of your transmitter.

6.1 Views

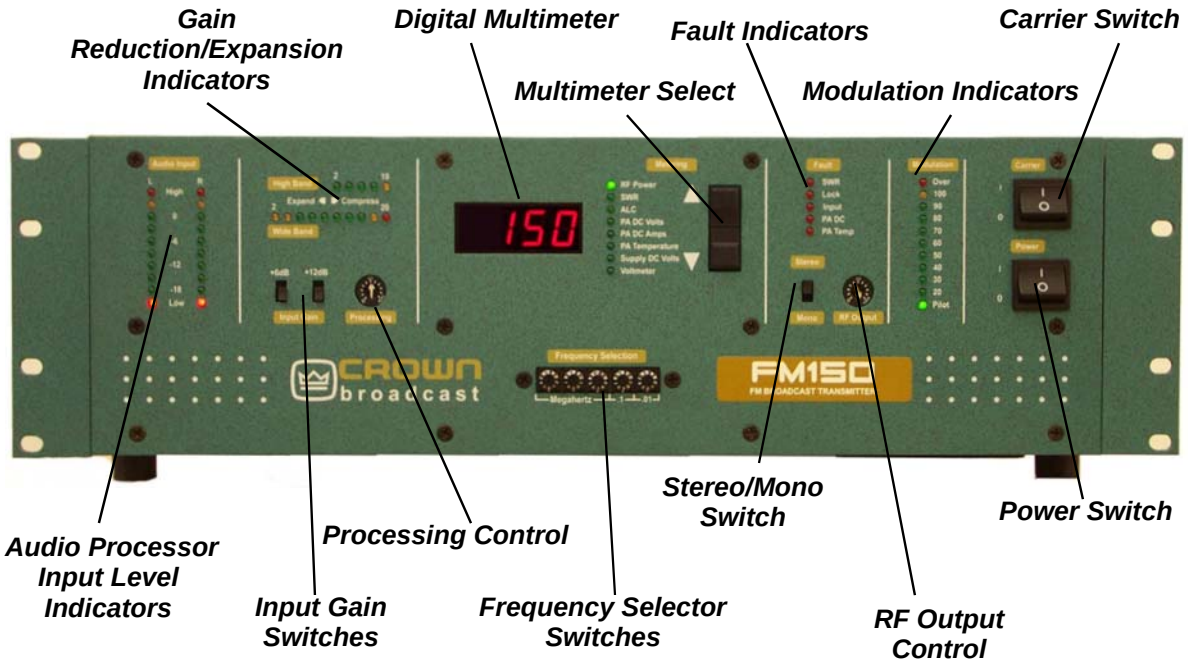

Illustration 6-1 Front View

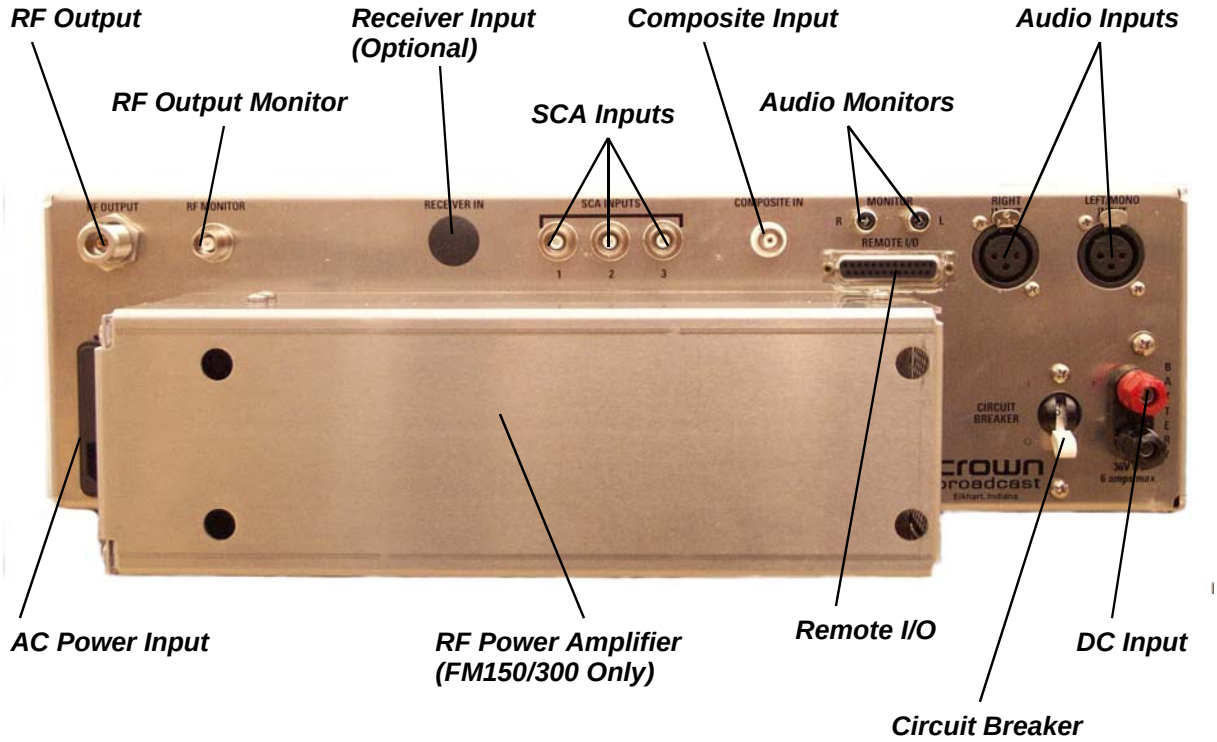

Illustration 6-2 Rear View

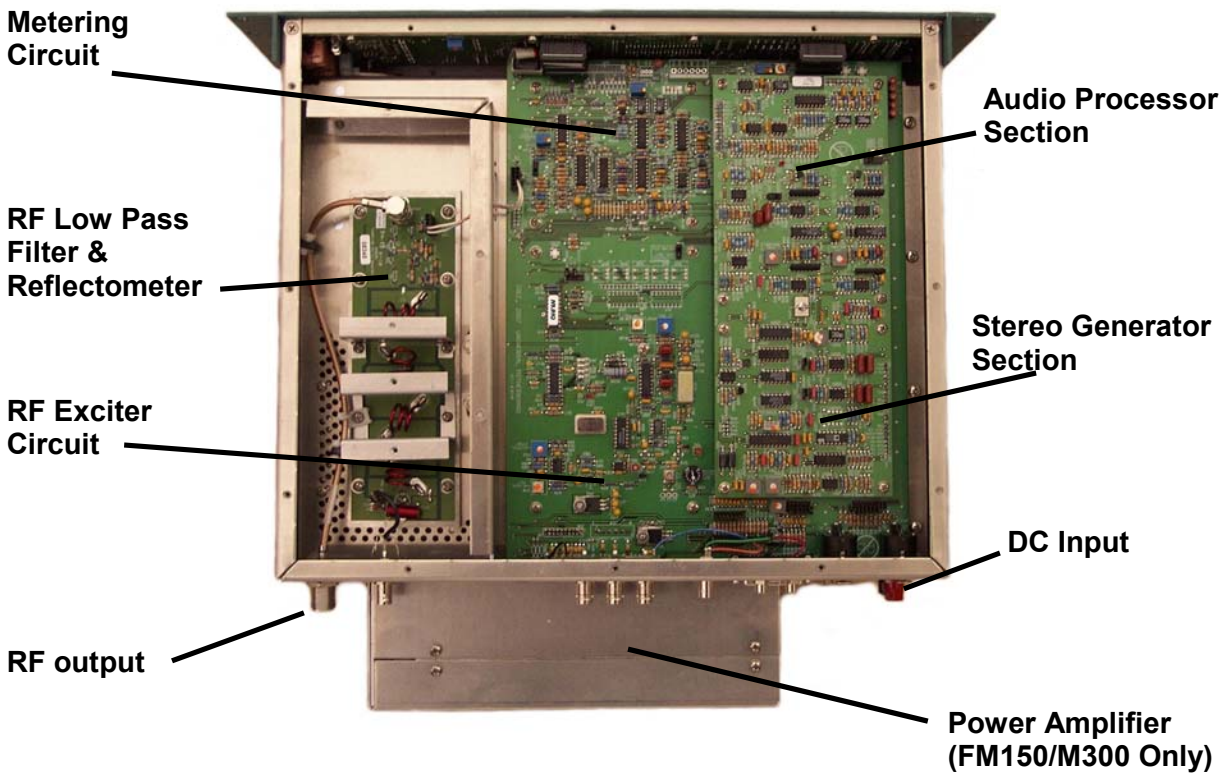

Illustration 6-3 Chassis Top View

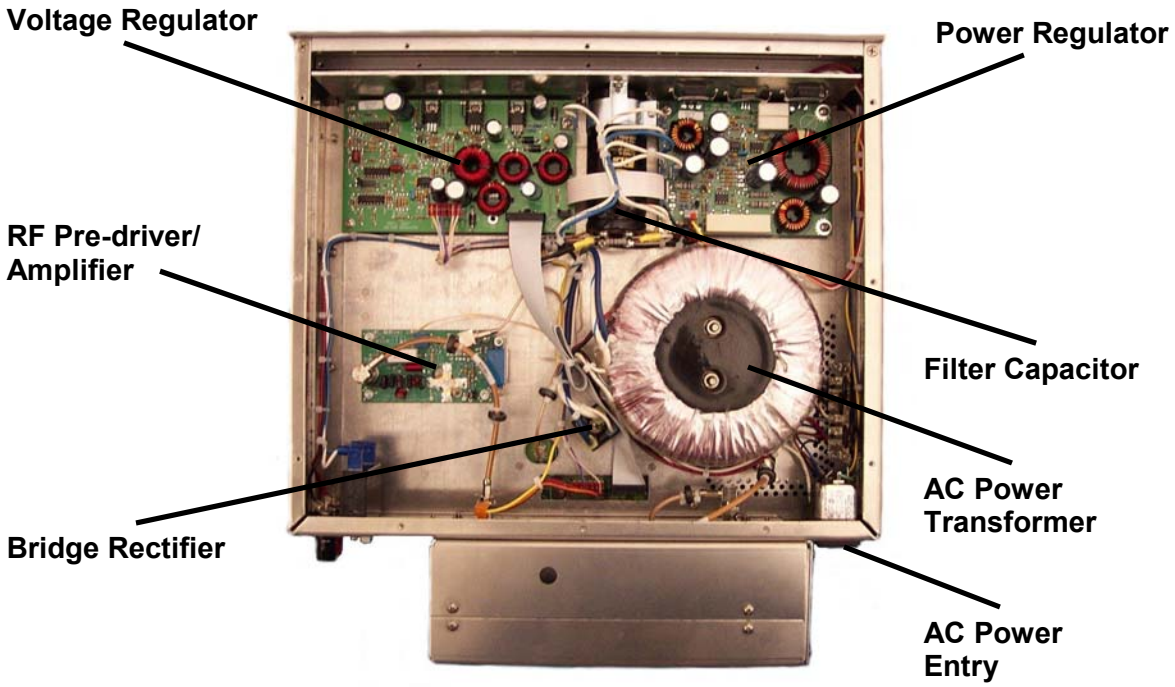

Illustration 6-4 Chassis Bottom View

Notes:

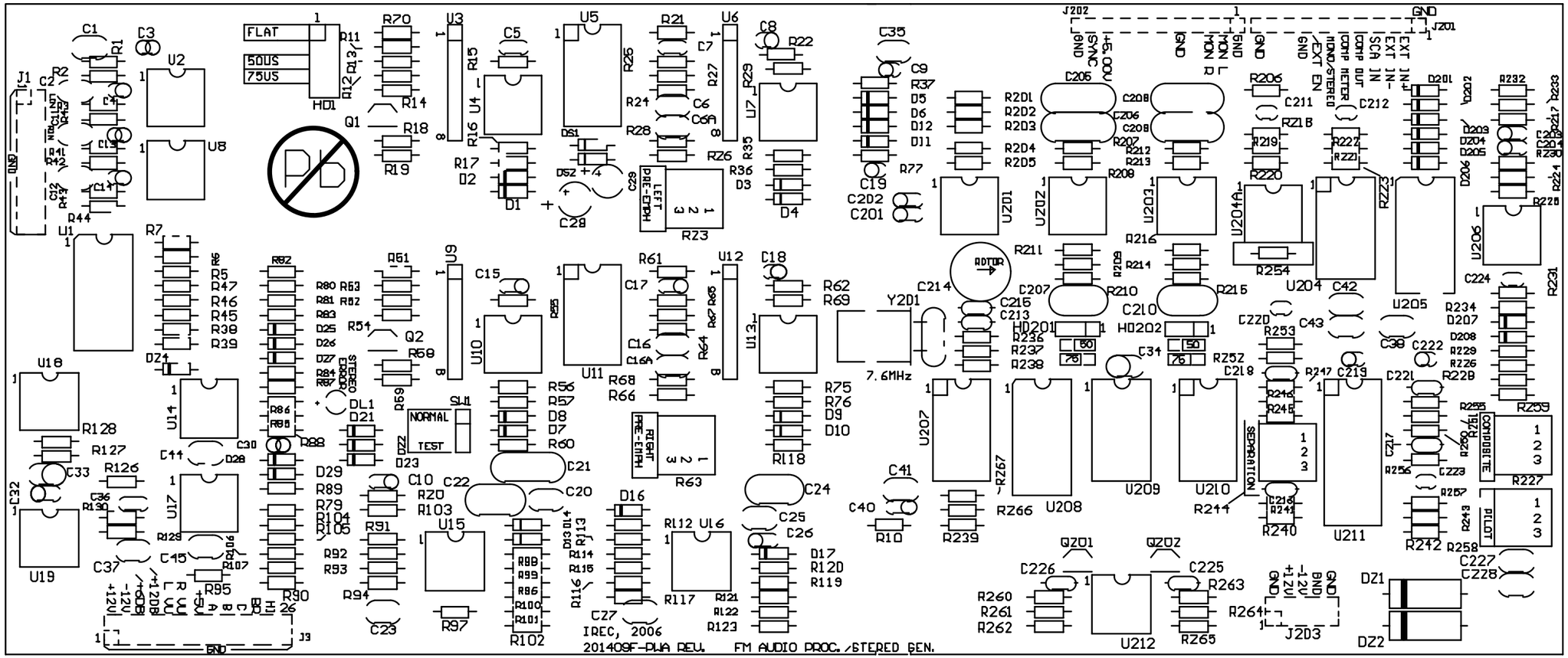

Illustration 6-5 Audio Processor/Stereo Generator Board

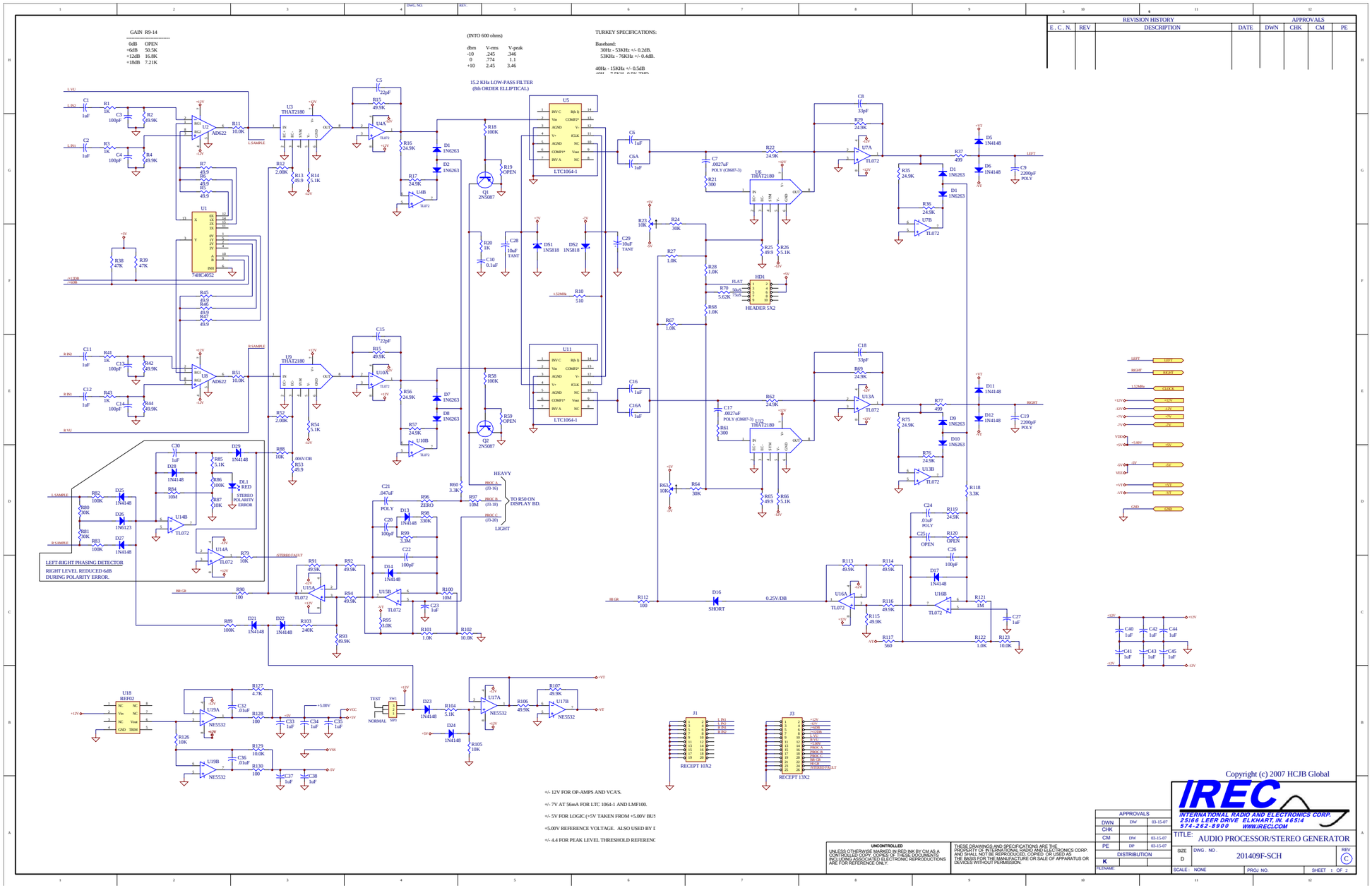

Schematic Diagram: Audio Processor/ Stereo Generator (Sheet 1 of 2)

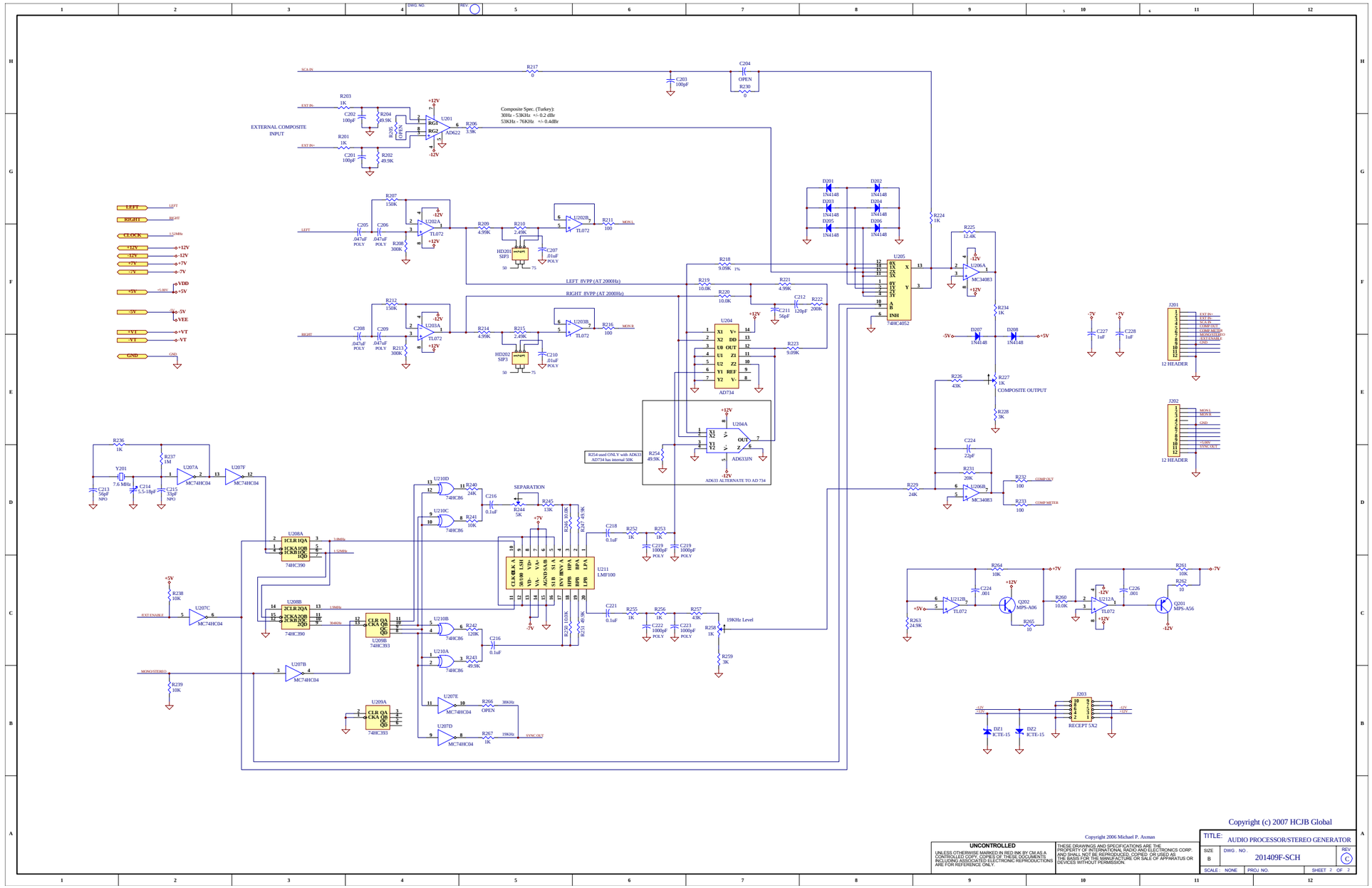

Schematic Diagram: Audio Processor/ Stereo Generator (Sheet 2 of 2)

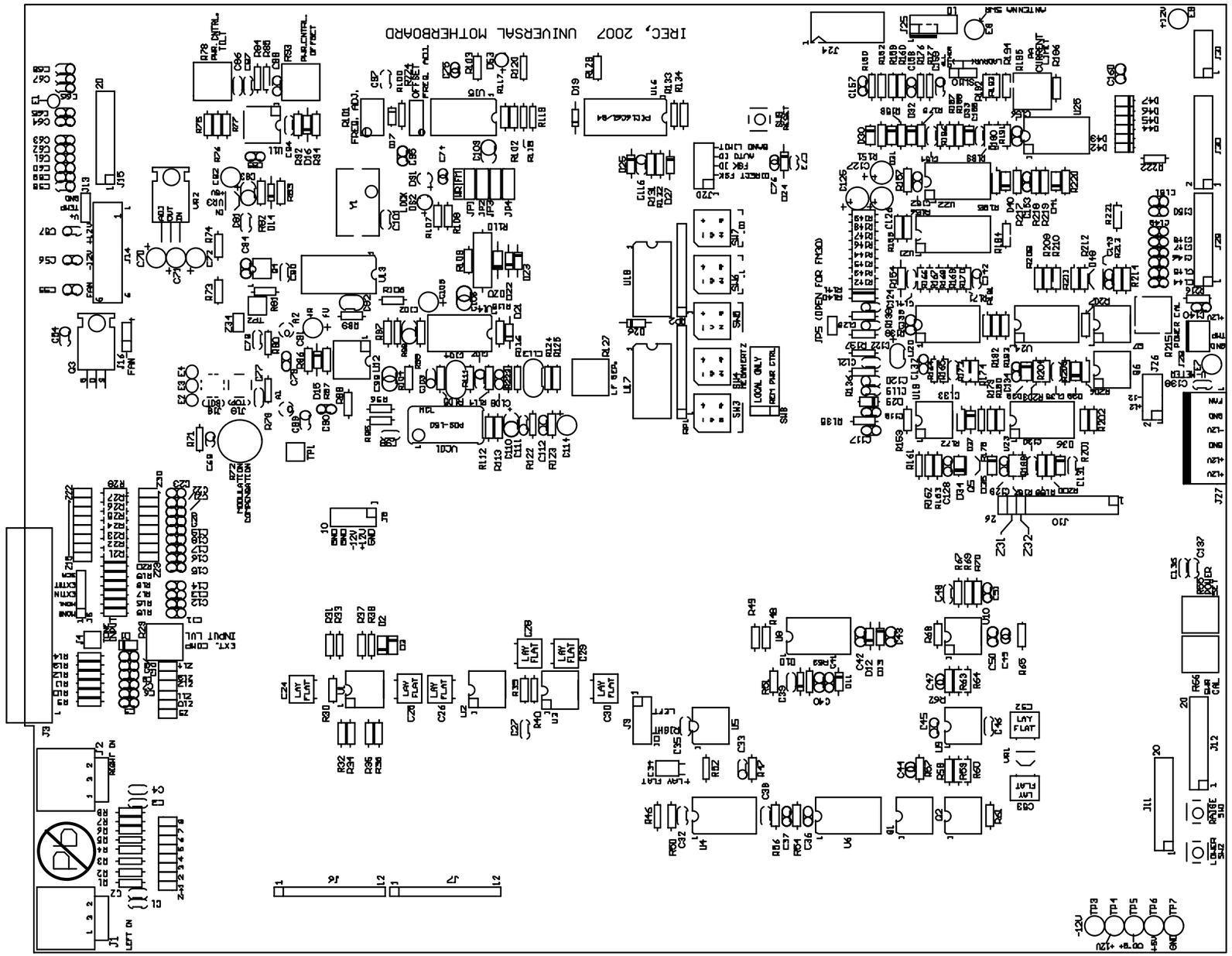

Illustration 6-6 Motherboard

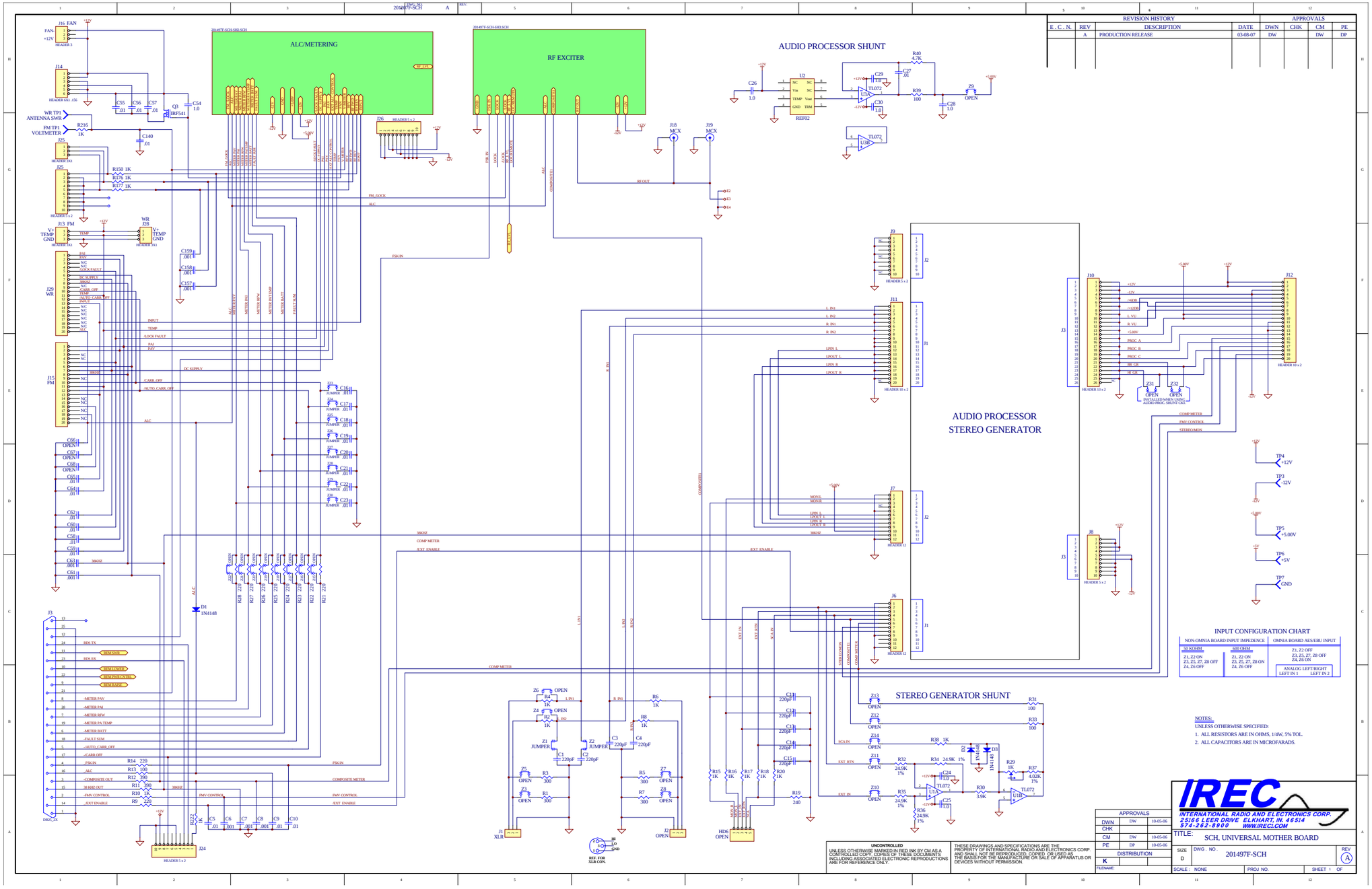

Schematic Diagram: Motherboard (Sheet 1 of 3)

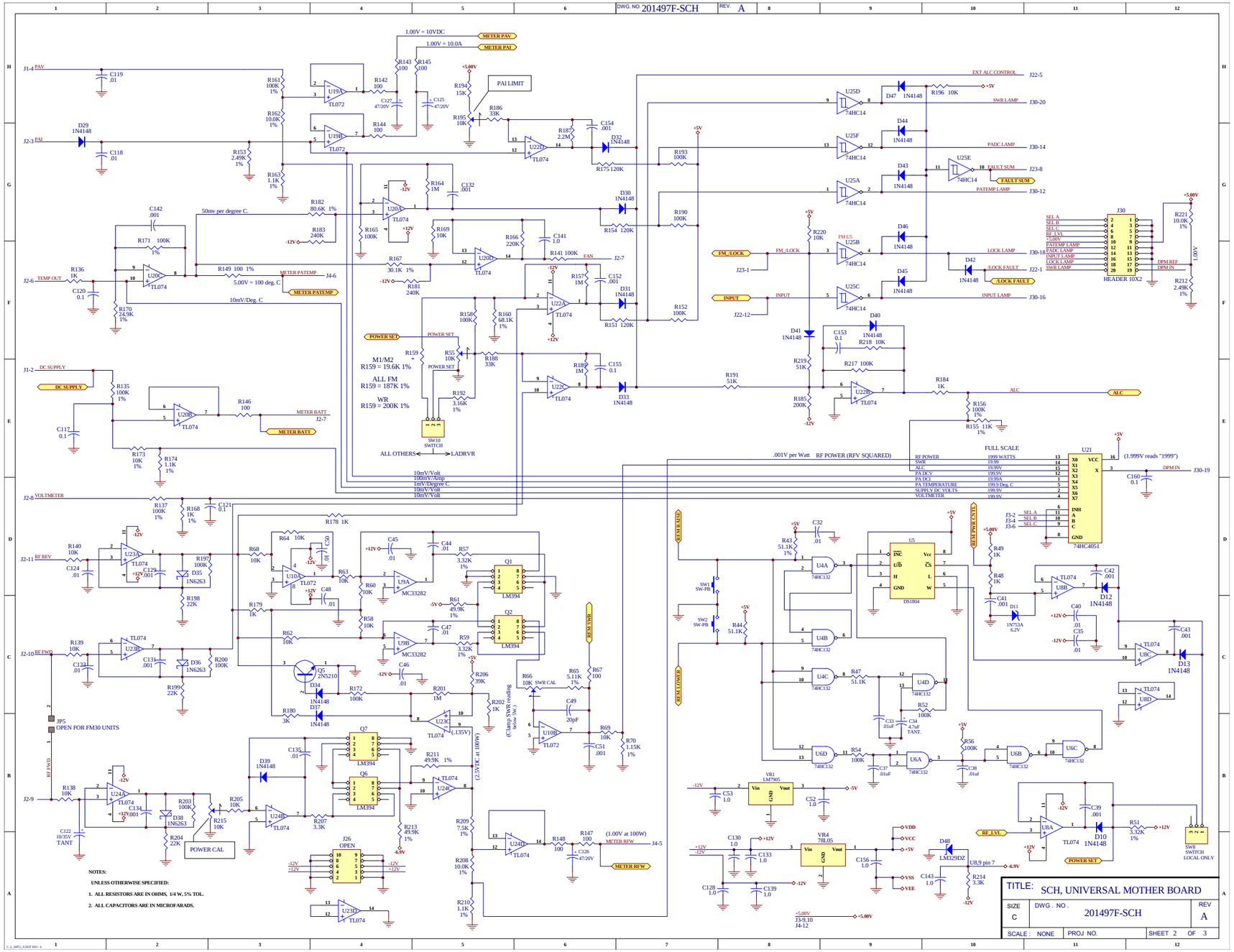

Schematic Diagram: Motherboard (Sheet 2 of 3)

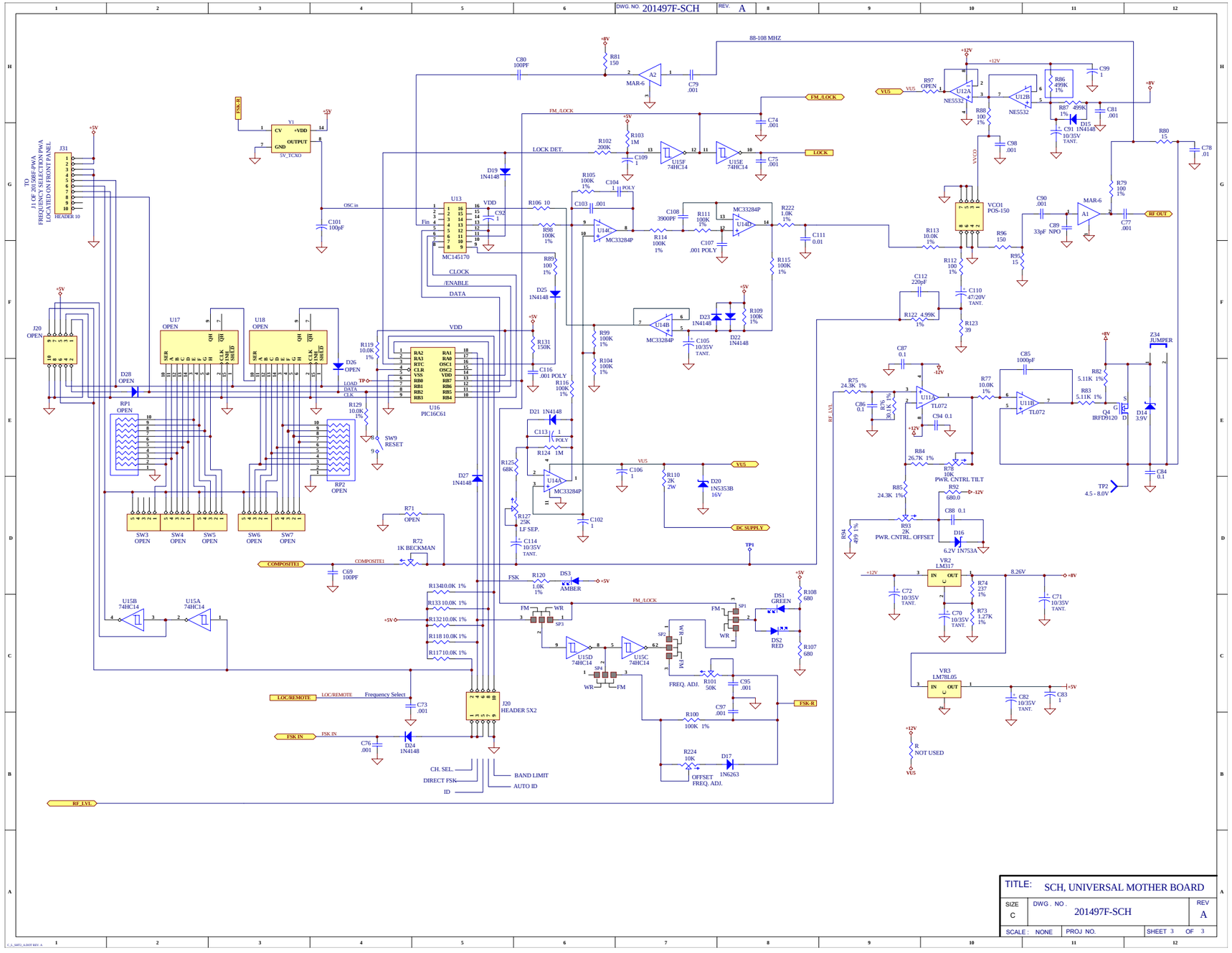

Schematic Diagram: Motherboard (Sheet 3 of 3)

Illustration 6-7 FM Frequency Selection Board (Top-Side)

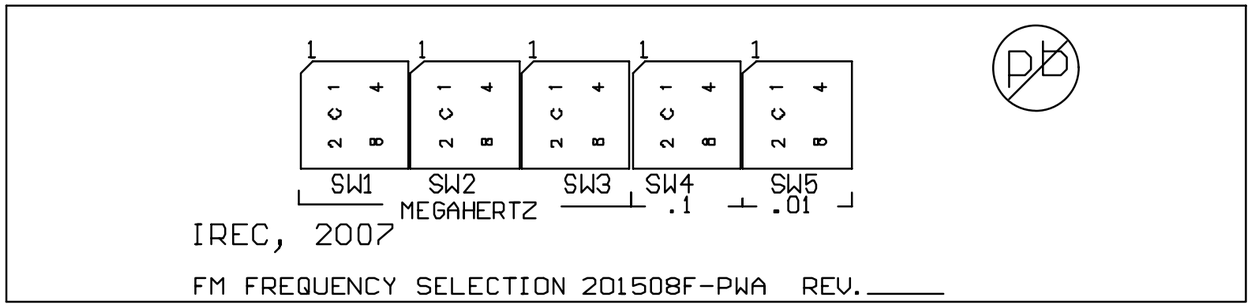

Illustration 6-8 FM Frequency Selection Board (Bottom-Side)

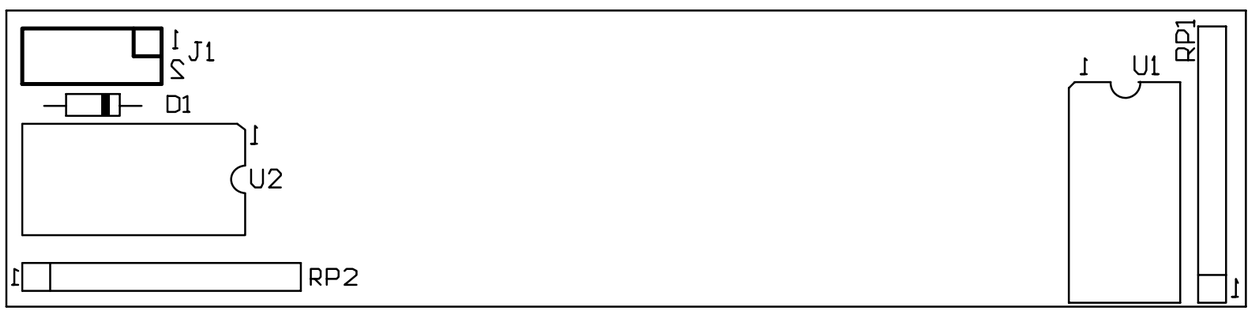

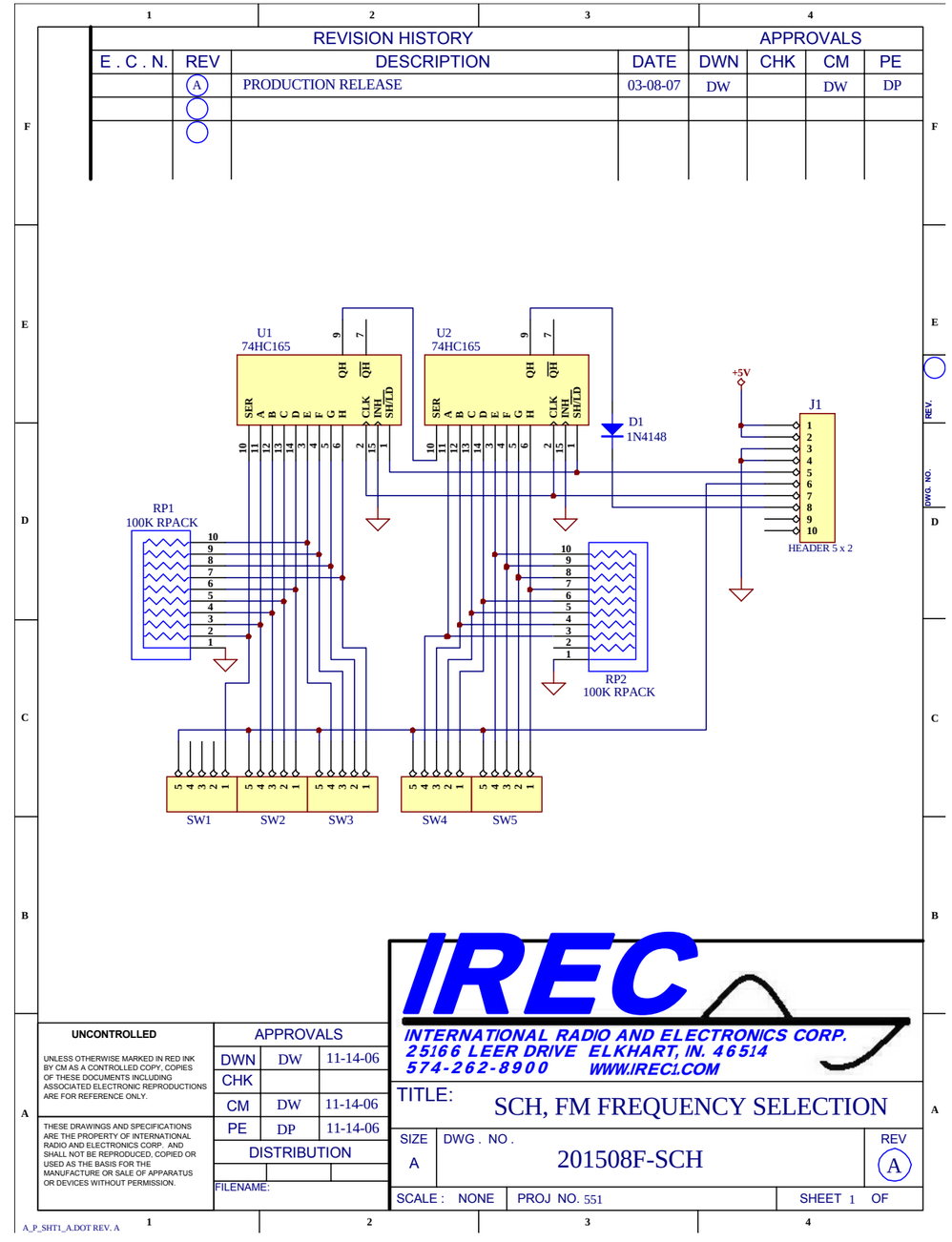

Schematic Diagram: FM Frequency Selection

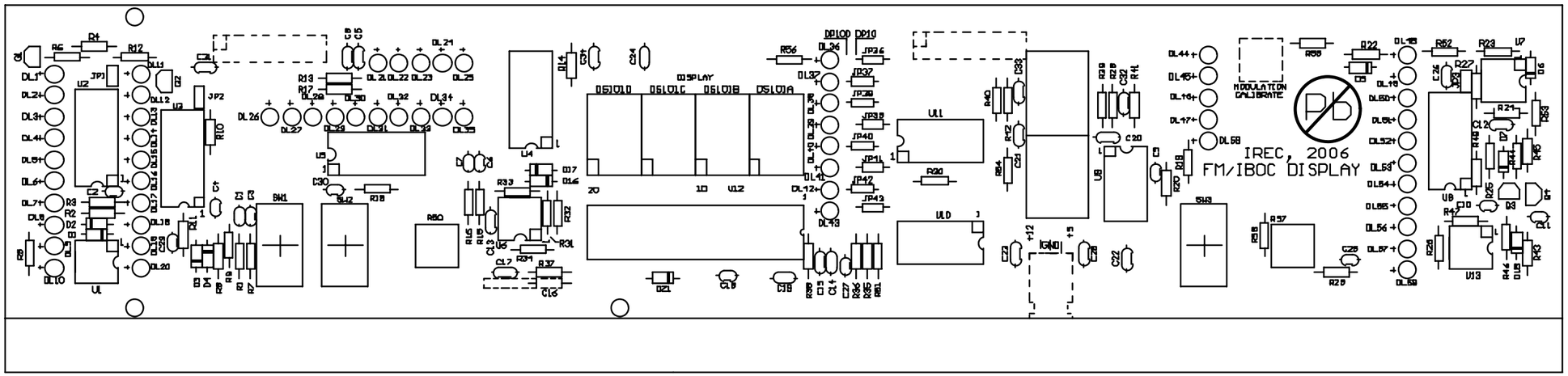

Illustration 6-9 FM Display Board

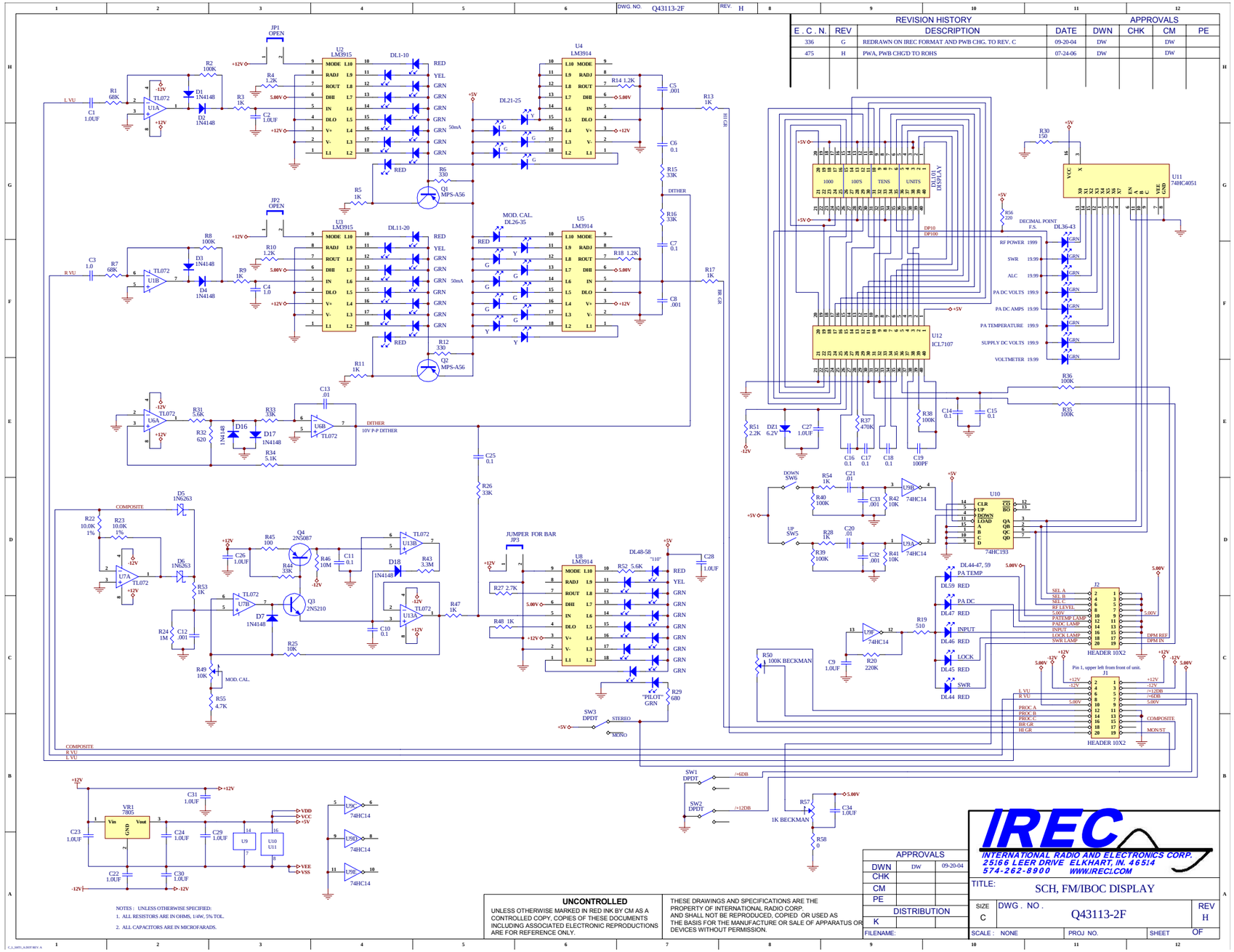

Schematic Diagram: FM Display

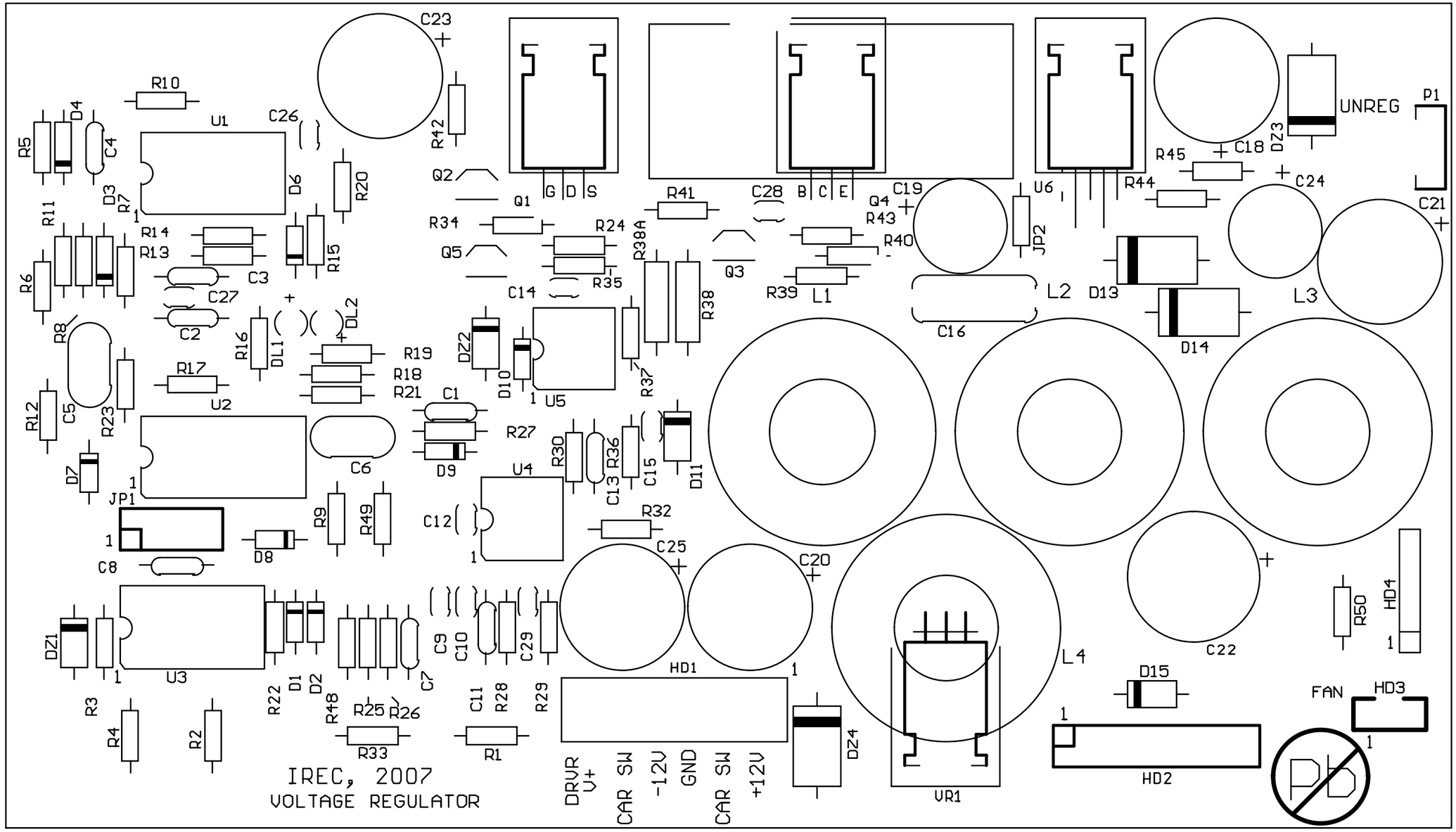

Illustration 6-10 FM Voltage Regulator

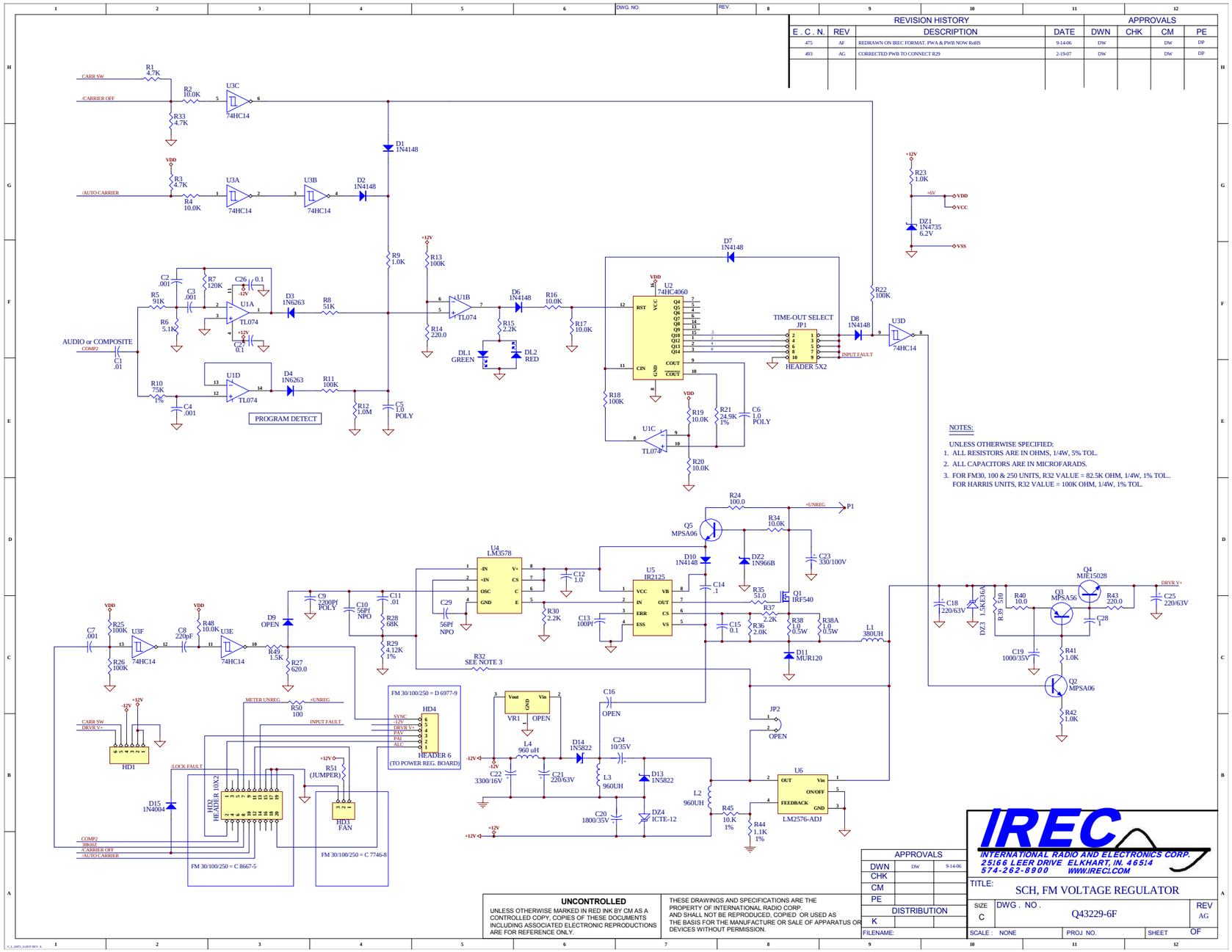

Schematic Diagram: FM Voltage Regulator

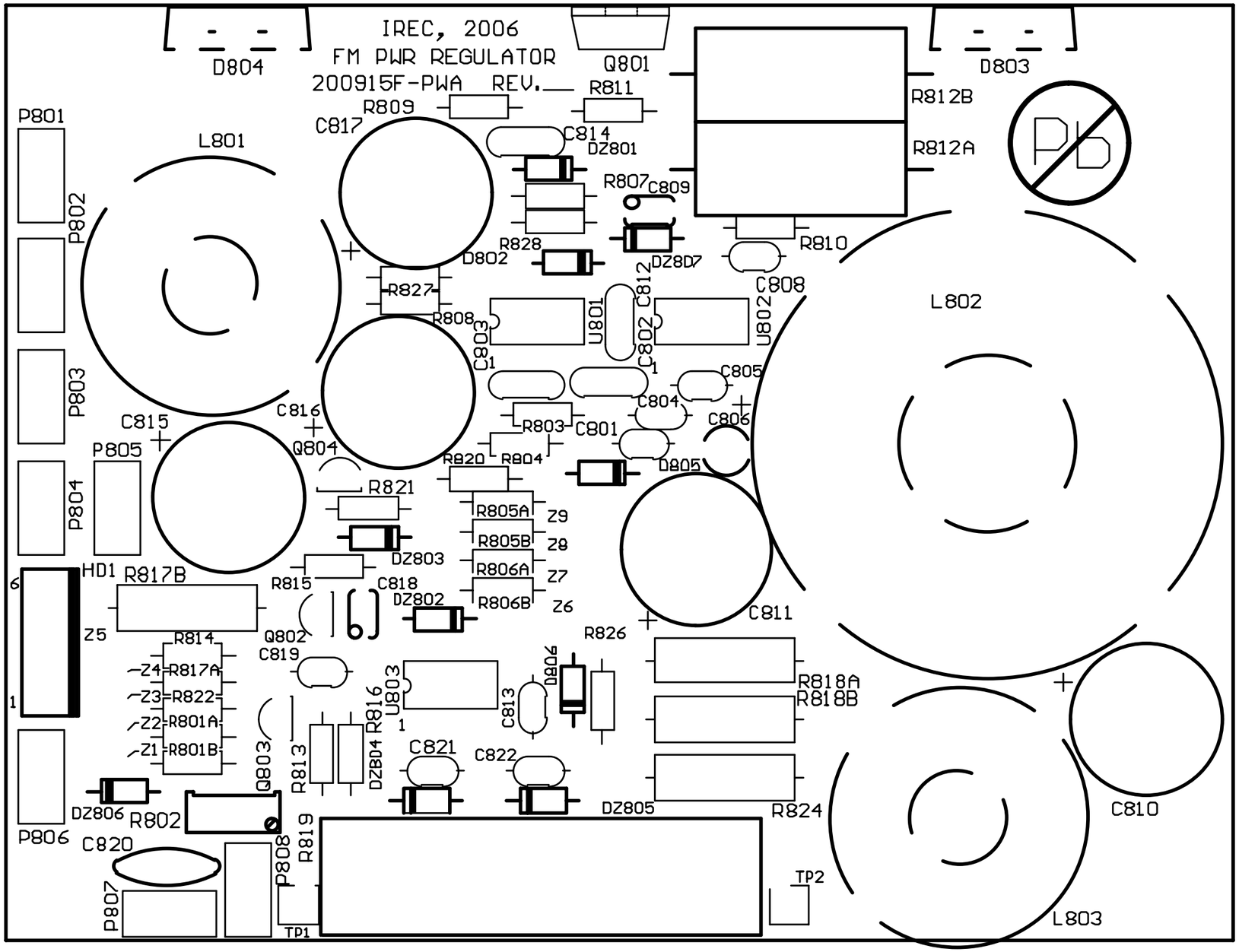

Illustration 6-11 FM Power Regulator

REVISION HISTORY				APPROVALS			
E . C . N.	REV	DESCRIPTION	DATE	DWN	CHK	CM	PE
	A	PRODUCTION RELEASE	10-31-03	DW		DW	DP
274	B	CORRECTED Z3 AND Z6 UNIT STATUS FOR M2 AND FM100	01-29-04	DW		DW	DP
323	C	SWAPPED Z1, Z2 TO MATCH PWB	08-10-04	DW		DW	DP
475	D	PWA & PWB NOW RoHS. CHG'D P/N	07-25-06	DW		DW	DP

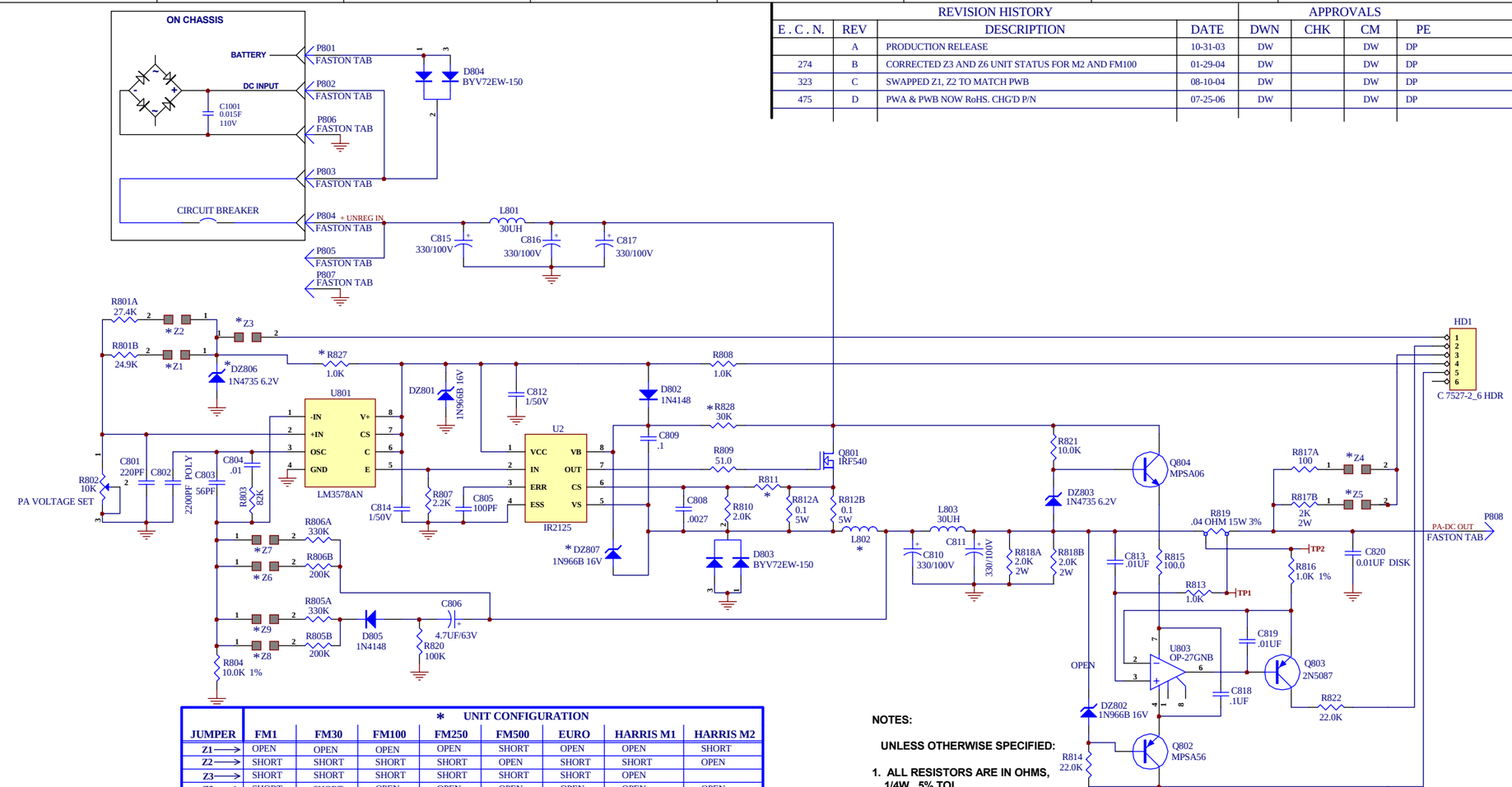

JUMPER	* UNIT CONFIGURATION FM1	FM30	FM100	FM250	FM500	EURO	HARRIS M1	HARRIS M2
Z1	OPEN	OPEN	OPEN	OPEN	SHORT	OPEN	OPEN	SHORT
Z2	SHORT	SHORT	SHORT	SHORT	OPEN	SHORT	SHORT	OPEN
Z3	SHORT	SHORT	SHORT	SHORT	SHORT	SHORT	OPEN	
Z8	SHORT	SHORT	OPEN	OPEN	OPEN	OPEN	OPEN	OPEN
Z7	OPEN	OPEN	SHORT	SHORT	SHORT	SHORT	SHORT	SHORT
Z6	SHORT	SHORT	OPEN	OPEN	OPEN	OPEN	OPEN	OPEN
Z4	SHORT	SHORT	SHORT	SHORT	OPEN	SHORT	SHORT	OPEN
Z5	OPEN	OPEN	OPEN	OPEN	SHORT	OPEN	OPEN	SHORT
Z9	OPEN	OPEN	SHORT	SHORT	SHORT	SHORT	SHORT	SHORT
REF DES								
L802	H43608-1	H43395-5	H43533-1	H43533-1	H43533-1	H43533-1	H43533-1	H43533-1
R811	3.3K	3.3K	3.3K	3.3K	3.3K	5.11K 1%	3.3K	3.3K
R827	OPEN	OPEN	OPEN	OPEN	OPEN	OPEN	INSTALLED	INSTALLED
R828	OPEN	OPEN	OPEN	OPEN	OPEN	OPEN	INSTALLED	INSTALLED
DZ806	OPEN	OPEN	OPEN	OPEN	OPEN	OPEN	INSTALLED	INSTALLED
DZ807	OPEN	OPEN	OPEN	OPEN	OPEN	OPEN	INSTALLED	INSTALLED

NOTES:

UNLESS OTHERWISE SPECIFIED:

1. ALL RESISTORS ARE IN OHMS, 1/4W, 5% TOL.
2. ALL CAPACITORS ARE IN MICROFARADS.

UNCONTROLLED
UNLESS OTHERWISE MARKED IN RED INK BY CM AS A CONTROLLED COPY, COPIES OF THESE DOCUMENTS INCLUDING ASSOCIATED ELECTRONIC REPRODUCTIONS ARE FOR REFERENCE ONLY.

THESE DRAWINGS AND SPECIFICATIONS ARE THE PROPERTY OF INTERNATIONAL RADIO AND ELECTRONICS CORP. AND ARE NOT TO BE REPRODUCED, COPIED OR USED AS THE BASIS FOR THE MANUFACTURE OR SALE OF APPARATUS OR DEVICES WITHOUT PERMISSION.

APPROVALS		
DWN	DW	09-30-03
CHK		
CM	DW	09-30-03
PE	DP	09-30-03
DISTRIBUTION		

FILENAME: 200915-SCH

IREC
INTERNATIONAL RADIO AND ELECTRONICS CORP.
25166 LEER DRIVE ELKHART, IN. 46514
574-262-8900 WWW.IRECI.COM

TITLE: FM POWER REGULATOR

SIZE B | DWG . NO . 200915F-SCH | REV. D

SCALE : NONE | PROJ NO. 533 | SHEET

C10582-2

B_L_SHT1_A.DOT REV. A

Schematic Diagram: FM Power Regulator

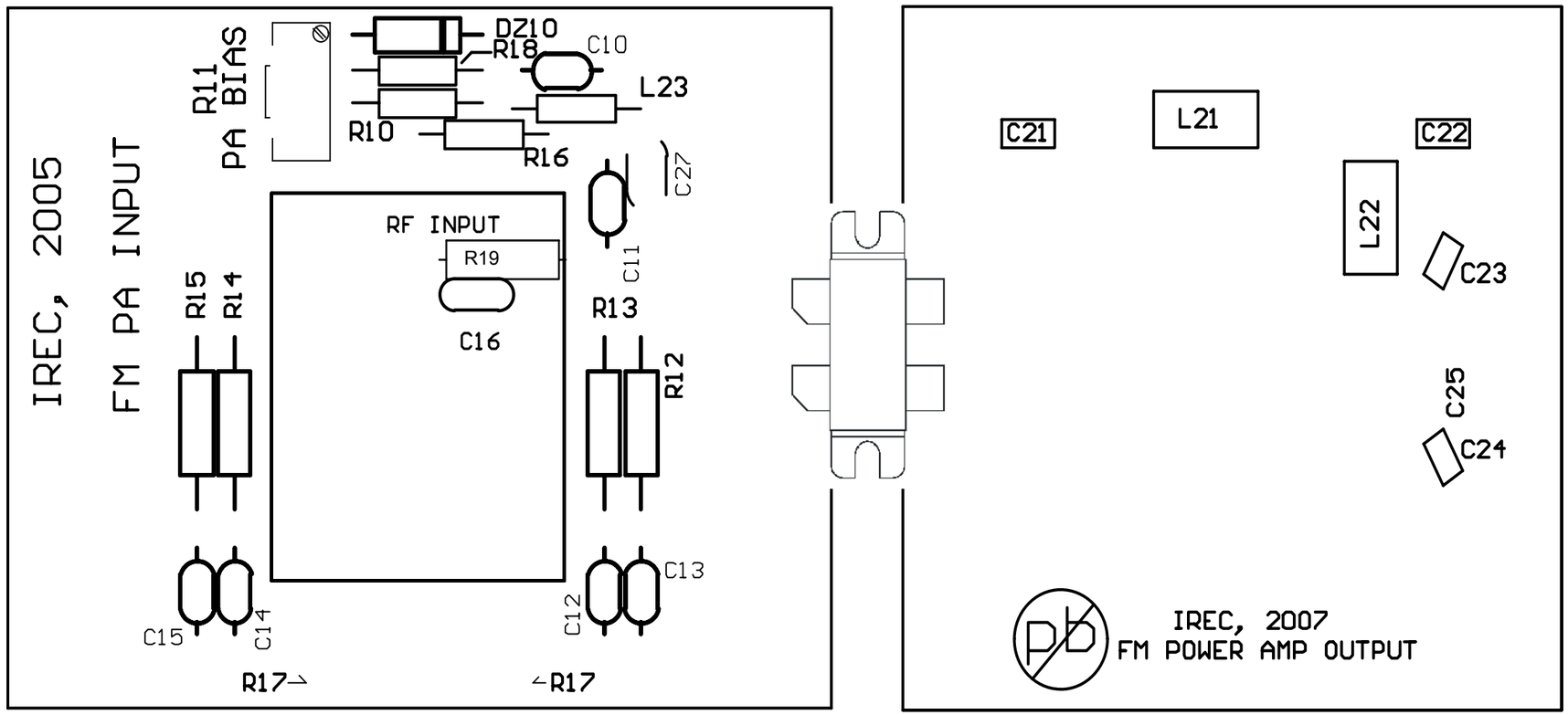

Illustration 6-12 FM Power Amplifier FM150/FM300

REVISION HISTORY				APPROVALS			
E . C . N.	REV	DESCRIPTION	DATE	DWN	CHK	CM	PE
	A	PRODUCTION RELEASE	02-20-07	DW		DW	DP

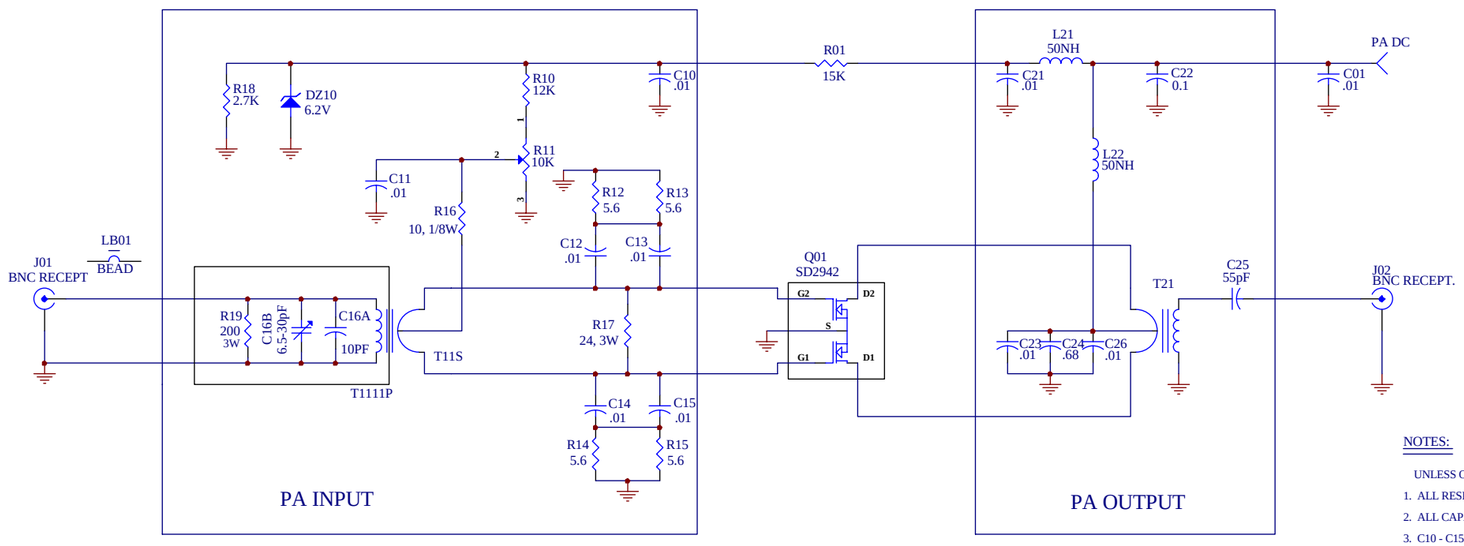

NOTES:

UNLESS OTHERWISE SPECIFIED:

1. ALL RESISTORS ARE IN OHMS, 1/4W, +/- 5% TOL.
2. ALL CAPACITORS ARE IN MICROFARADS.
3. C10 - C15 = .01 CHIP
4. L21 AND L22 = 8 TURNS CLOSE-WOUND, 3/16 INCH I.D.

APPROVALS		
DWN	DW	02-20-07
CHK		
CM	DW	02-20-07
PE	DP	02-20-07
DISTRIBUTION		

FILENAME:

UNCONTROLLED
UNLESS OTHERWISE MARKED IN RED INK BY CM AS A CONTROLLED COPY, COPIES OF THESE DOCUMENTS INCLUDING ASSOCIATED ELECTRONIC REPRODUCTIONS ARE FOR REFERENCE ONLY.

THESE DRAWINGS AND SPECIFICATIONS ARE THE PROPERTY OF INTERNATIONAL RADIO AND ELECTRONICS CORP. AND ARE NOT TO BE REPRODUCED, COPIED OR USED AS THE BASIS FOR THE MANUFACTURE OR SALE OF APPARATUS OR DEVICES WITHOUT PERMISSION.

IREC
INTERNATIONAL RADIO AND ELECTRONICS CORP.
25166 LEER DRIVE ELKHART, IN. 46514
574-262-8900 WWW.IREC1.COM

TITLE: FM RF AMPLIFIER

SIZE	DWG . NO .	REV.
B	201551F-SCH	A

SCALE : NONE | PROJ NO. | SHEET 1

B_L_SHT1_A.DOT REV. A

Schematic Diagram: FM RF Amplifier

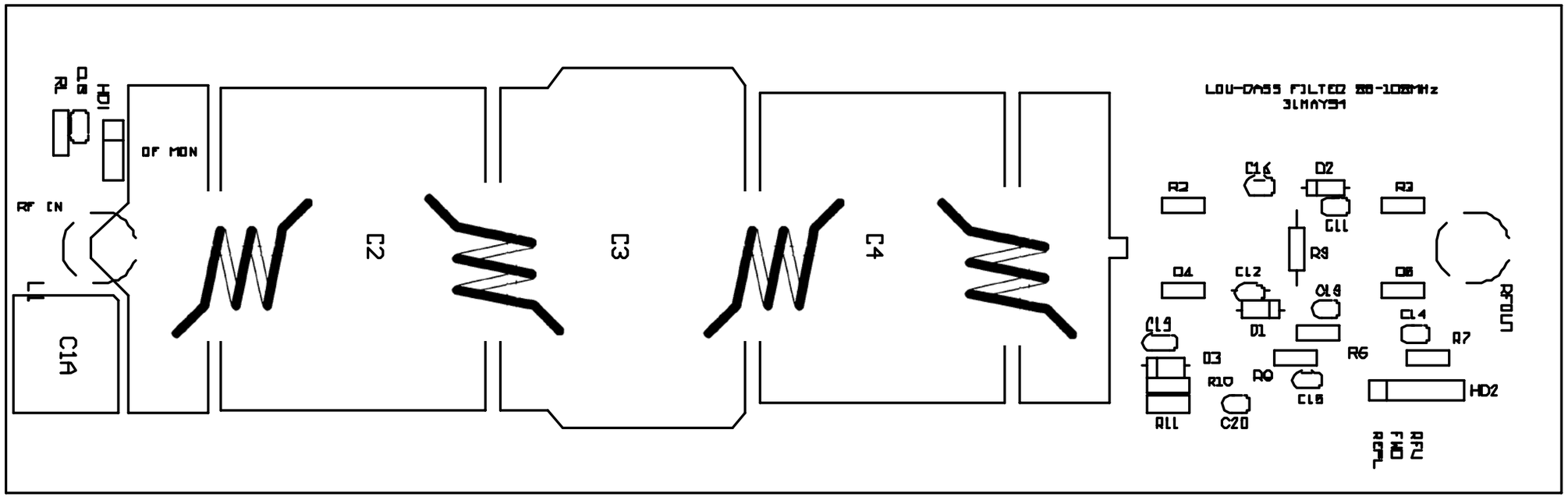

Illustration 6-13 FM Low Pass Filter #2

EP

REVISION HISTORY				APPROVALS			
E . C . N.	REV	DESCRIPTION	DATE	DWN	CHK	CM	PE
	J	REDRAWN	12-05-03	DW			DP

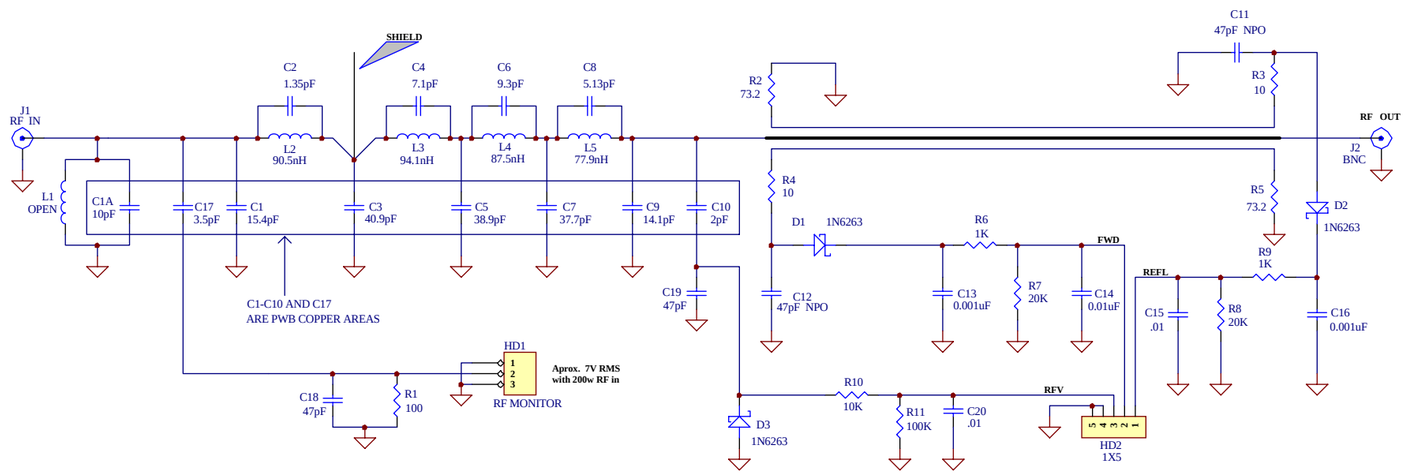

NOTES:
=======

UNLESS OTHERWISE SPECIFIED

1) ALL RESTORS ARE IN OHMS, 1/4W, 5%

2) ALL CAPACITORS ARE IN MICROFARADS

3) C1-C10 AND C17 ARE CIRCUIT BOARD PADS

4) IF NECESSARY, SELECT R2 FOR SWR READING OF 1.1 OR BETTER WITH 50 OHM LOAD R5 = R2

APPROVALS		
DWN	DW	03-14-02
CHK		
CM		
PE		
DISTRIBUTION		

FILENAME:

UNCONTROLLED
UNLESS OTHERWISE MARKED IN RED INK BY CM AS A CONTROLLED COPY, COPIES OF THESE DOCUMENTS INCLUDING ASSOCIATED ELECTRONIC REPRODUCTIONS ARE FOR REFERENCE ONLY.

THESE DRAWINGS AND SPECIFICATIONS ARE THE PROPERTY OF INTERNATIONAL RADIO AND ELECTRONICS CORP. AND ARE NOT TO BE REPRODUCED, COPIED OR USED AS THE BASIS FOR THE MANUFACTURE OR SALE OF APPARATUS OR DEVICES WITHOUT PERMISSION.

IREC
INTERNATIONAL RADIO AND ELECTRONICS CORP.
25166 LEER DRIVE ELKHART, IN. 46514
574-262-8900 WWW.IRECI.COM

TITLE: FM LOW PASS FILTER #2

SIZE	DWG . NO .	REV.
B	103209-SCH	J

SCALE : NONE | PROJ NO. | SHEET

B_L_SHT1_A.DOT REV. A

Schematic Diagram: FM Low Pass Filter #2

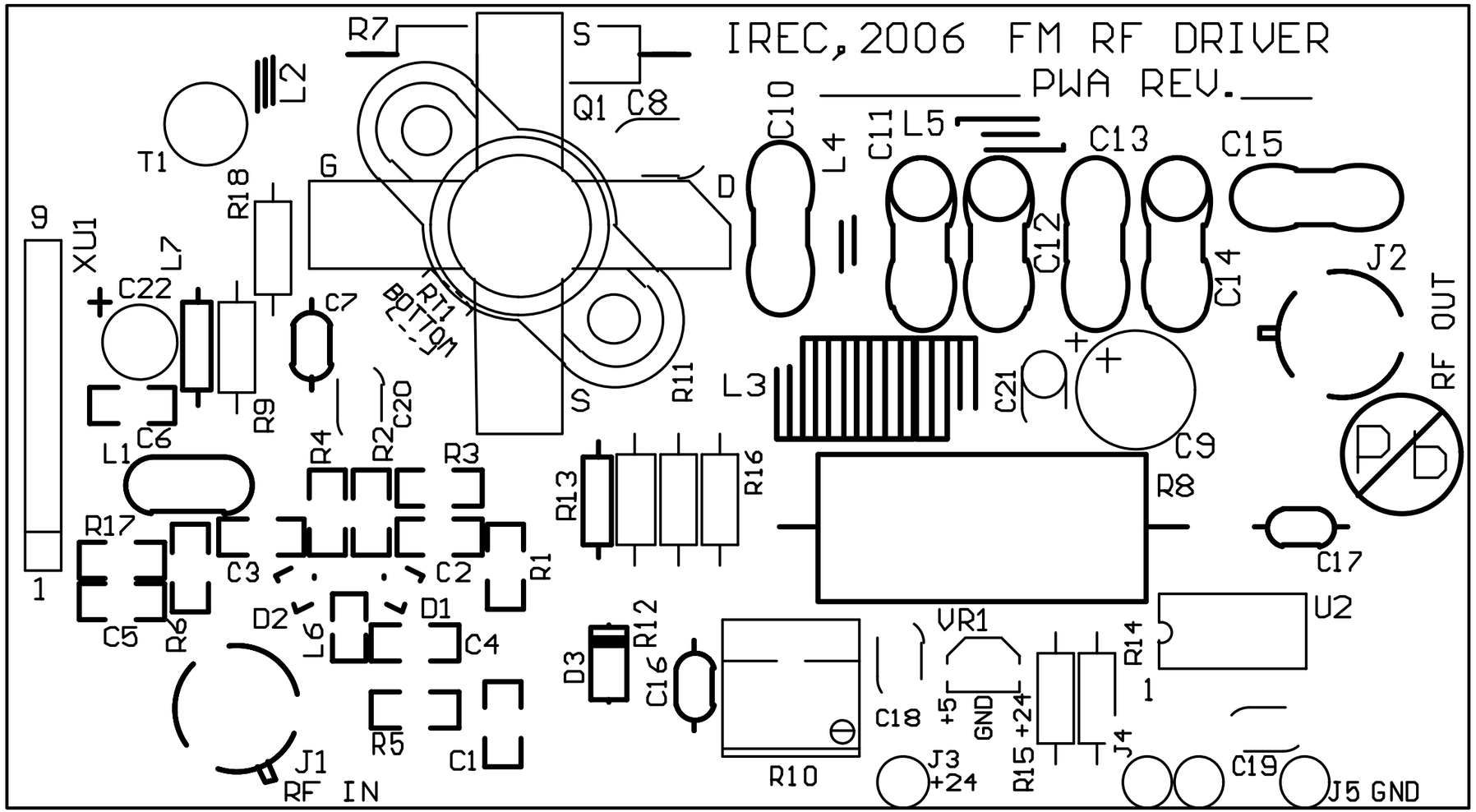

Illustration 6-14 FM RF Driver

REVISION HISTORY				APPROVALS			
E . C . N.	REV	DESCRIPTION	DATE	DWN	CHK	CM	PE
264	M	PRODUCTION RELEASE	12-10-03	DW		DW	DP
279	N	XU1 WAS 200479-TERM-10	01-29-04	DW		DW	MH
316	O	PWB CHG'D TO REV. C	06-14-04	DW		DW	DP
361	P	PWB CHG'D TO REV. D	03-22-05	DW		DW	DP
475	Q	PWA & PWB NOW RoHS.	07-28-06	DW		DW	DP

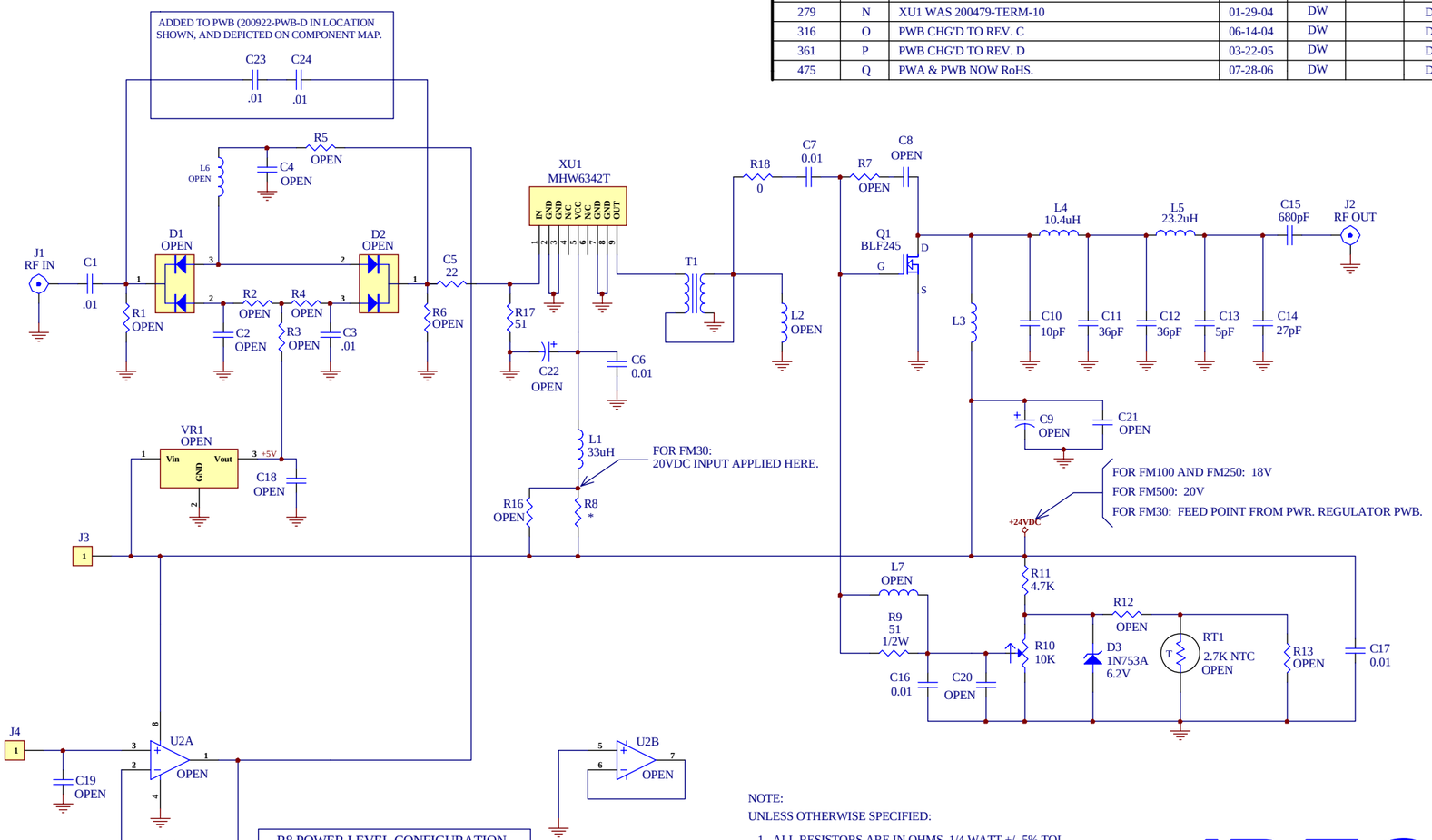

R8 POWER LEVEL CONFIGURATION			
FM30	FM100	FM250	FM500
OPEN	3 OHM 5W	3 OHM 5W	2.7 OHM 5W

NOTE:
UNLESS OTHERWISE SPECIFIED:

1. ALL RESISTORS ARE IN OHMS, 1/4 WATT +/- 5% TOL.
2. ALL CAPACITORS ARE IN MICROFARADS.

APPROVALS		
DWN	DW	08-28-03
CHK		
CM	DW	10-30-03
PE	DP	10-30-03
DISTRIBUTION		
FILENAME:		

UNCONTROLLED
UNLESS OTHERWISE MARKED IN RED INK BY CM AS A CONTROLLED COPY, COPIES OF THESE DOCUMENTS INCLUDING ASSOCIATED ELECTRONIC REPRODUCTIONS ARE FOR REFERENCE ONLY.

THESE DRAWINGS AND SPECIFICATIONS ARE THE PROPERTY OF INTERNATIONAL RADIO AND ELECTRONICS CORP. AND ARE NOT TO BE REPRODUCED, COPIED OR USED AS THE BASIS FOR THE MANUFACTURE OR SALE OF APPARATUS OR DEVICES WITHOUT PERMISSION.

IREC
INTERNATIONAL RADIO AND ELECTRONICS CORP.
25166 LEER DRIVE ELKHART, IN. 46514
574-262-8900 WWW.IREC1.COM

TITLE: SCH, FM RF DRIVER

SIZE	DWG . NO .	REV.
B	Q43310-4F	Q

SCALE : NONE | PROJ NO. 533 | SHEET

B_L_SHT1_A.DOT REV. A

Schematic Diagram: FM RF Driver

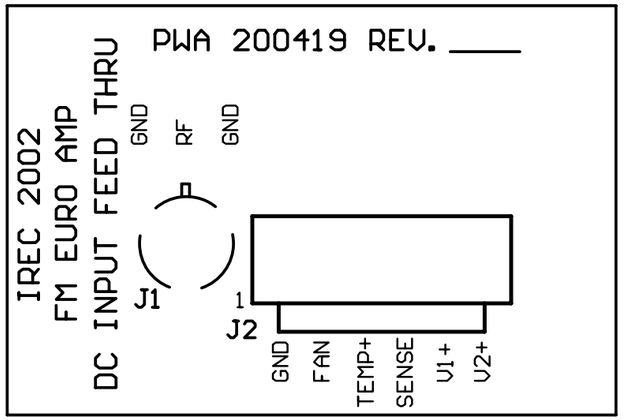

Illustration 6-15 FM Euroamp DC Input Feedthru (Top Side)

Illustration 6-16 FM Euroamp DC Input Feedthru (Bottom Side)

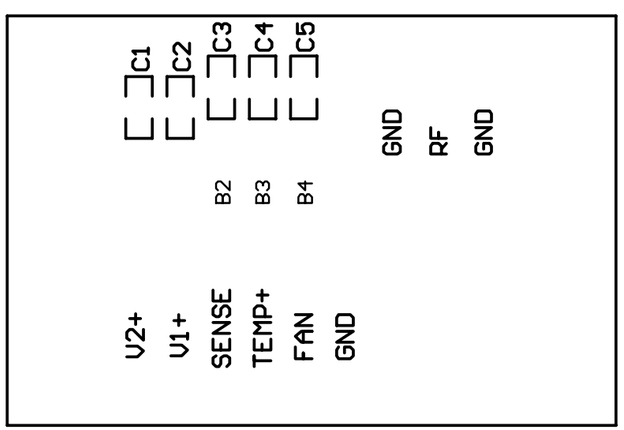

REVISION HISTORY				APPROVALS			
E . C . N.	REV	DESCRIPTION	DATE	DWN	CHK	CM	PE
160-A	A	PRODUCTION RELEASE	02-19-02	DW			

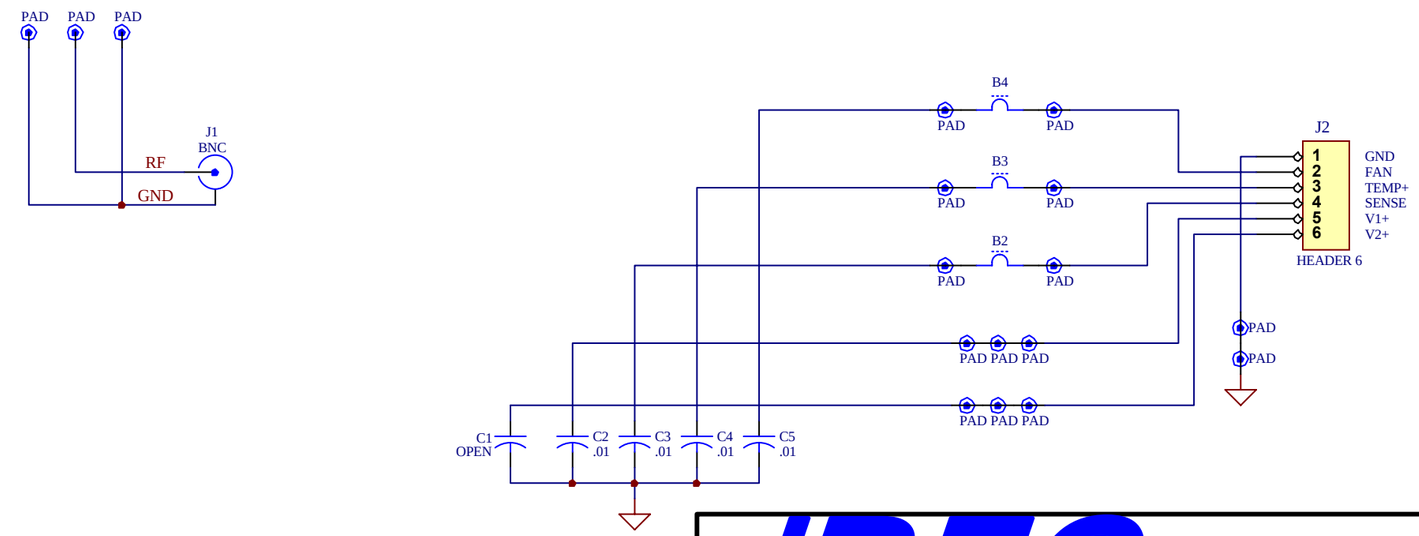

UNCONTROLLED

UNLESS OTHERWISE MARKED IN RED INK BY CM AS A CONTROLLED COPY, COPIES OF THESE DOCUMENTS INCLUDING ASSOCIATED ELECTRONIC REPRODUCTIONS ARE FOR REFERENCE ONLY.

THESE DRAWINGS AND SPECIFICATIONS ARE THE PROPERTY OF INTERNATIONAL RADIO AND ELECTRONICS CORP. AND SHALL NOT BE REPRODUCED, COPIED OR USED AS THE BASIS FOR THE MANUFACTURE OR SALE OF APPARATUS OR DEVICES WITHOUT PERMISSION.

APPROVALS		
DWN	DW	02-07-02
CHK		
CM		
PE		
DISTRIBUTION		
K		

FILENAME: 200419-SCH-2.SCH

IREC
INTERNATIONAL RADIO AND ELECTRONICS CORP.
25166 LEER DRIVE ELKHART, IN. 46514
574-262-8900 WWW.IREC1.COM

TITLE: SCH, FM EUROAMP DC INPUT FEED THRU

SIZE A | DWG . NO . 200419-SCH | REV A

SCALE : NONE | PROJ NO. | SHEET OF

A_L_SHT1_A.DOT REV. A

Schematic Diagram: FM Euroamp DC Input Feedthru

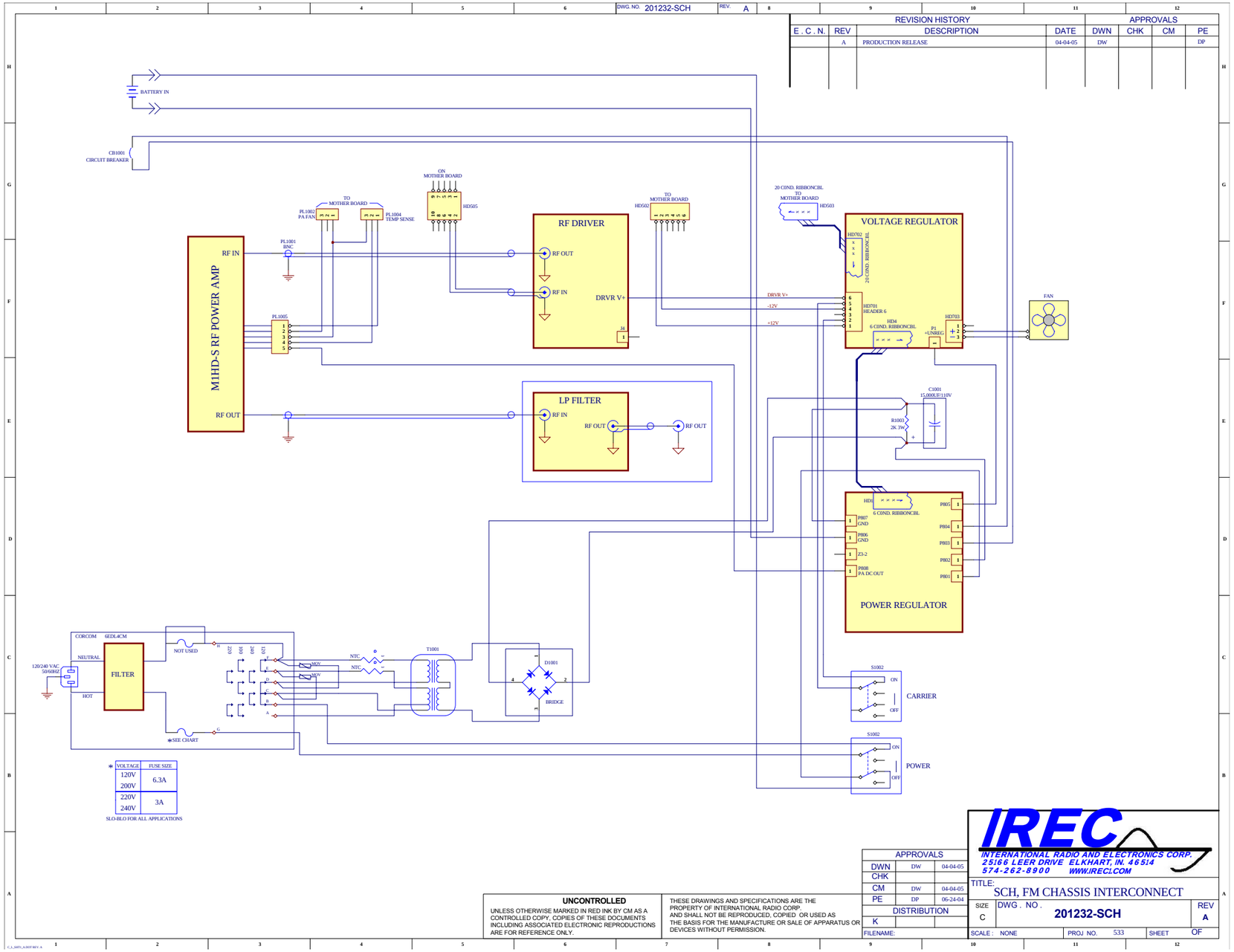

Schematic Diagram: FM Chassis Interconnect

Section 7—Service and Support

We understand that you may need various levels of support or that the product could require servicing at some point in time. This section provides information for both of these scenarios.

7.1 Service

The product warranty (see opposite page) outlines our responsibility for defective products. Before returning a product for repair or replacement (our choice), call our Customer Service department using the following telephone number:

(866) 262-8917

Our Customer Service Representative will give you further instructions regarding the return of your product. Use the original shipping carton or a new one obtained from Crown. Place shipping spacers between the slide-out power amplifier assembly and the back panel. Please fill out the Factory Service Instructions sheet (page 7–5) and include it with your returned product.

7.2 24–Hour Support

In most instances, what you need to know about your product can be found in this manual. There are times when you may need more in-depth information or even emergency-type information. We provide 24–hour technical assistance on your product via a toll telephone call. For **emergency help** or **detailed technical assistance**, call

(866) 262-8917

You may be required to leave a message at this number but your call will be returned promptly from our on-call technician.

7.3 Spare Parts

To obtain spare parts, call **Crown Broadcast Sales** at the following number.
(866) 262-8917

You may also write to the following address:

International Radio & Electronics Corporation

25166 Leer Drive

Elkhart, Indiana, U.S.A. 46514-5425

Crown Broadcast Five Year Limited Product Warranty

Summary Of Warranty

Crown Broadcast IREC warrants its broadcast products to the ORIGINAL PURCHASER of a NEW Crown Broadcast product, for a period of five (5) years after shipment from Crown Broadcast. All products are warranted to be free of defects in materials and workmanship and meet or exceed all specifications published by Crown Broadcast. Product nameplate with serial number must be intact and not altered in any way. This warranty is non - transferable. This warranty in its entirety is the only warranty offered by Crown Broadcast. No other warranties, expressed or implied, will be enforceable.

Exclusions

Crown Broadcast will not warranty the product due to misuse, accident, neglect and improper installation or operation. Proper installation included A/C line surge suppression, lightning protection and proper grounding of the entire transmitter, and any other recommendations designated in the Instruction manual. This warranty does not extend to any other products other than those designed and manufactured by Crown Broadcast. This warranty does not cover any damage to any accessory such as loads, transmission line or antennas resulting from the use or failure of a Crown Broadcast transmitter. Warranty does not cover any loss of revenue resulting from any failure of a Crown Broadcast product, act of God, or natural disaster.

Procedure for Obtaining Warranty Service

Crown Broadcast will repair or service, at our discretion, any product failure as a result of normal intended use. Warranty repair can only be performed at our plant facility in Elkhart, Indiana USA or at a factory authorized service depot. Expenses in remedying the defect will be borne by Crown Broadcast, including two-way ground transportation cost within the continental United States. Prior to returning any product or component to Crown Broadcast for warranty work or repair, a Return Authorization (RA) number must be obtained from the Crown Broadcast Customer Service Department. Product must be returned in the original factory pack or equivalent. Original factory pack materials may be obtained at a nominal charge by contacting Crown Broadcast Customer Service. Resolution of the defective product will be made within a reasonable time from the date of receipt of the defective product.

Warranty Alterations

No person has the authority to enlarge, amend, or modify this warranty, in whole or in part. This warranty is not extended by the length of time for which the owner was deprived the use of the product. Repairs and replacement parts that are provided under the terms of this warranty shall carry only the unexpired portion of the warranty.

Product Design Changes

Crown Broadcast reserves the right to change the design and manufacture of any product at any time without notice and without obligation to make corresponding changes in products previously manufactured.

Legal Remedies of Purchaser

This written warranty is given in lieu of any oral or implied warranties not covered herein. Crown Broadcast disclaims all implied warranties including any warranties of merchantability or fitness for a particular purpose.

Crown Broadcast
25166 Leer Drive Elkhart, Indiana 46514-5425, Phone: (574) 262-8900, Fax: (866) 262-8909
www.crownbroadcast.com

The following lists describe the spare parts kit available for your transmitter.

For the FM150 and FM300, use part number ***GFMSPARES***.

The following parts are included:

Item	***Quantity***
Fuse, 4A Slo-blo 5mmX20mm	6
Fuse, 6.3A Slo-blo 5mmX20mm	5
Fuse, 12.5A Slo-blo 5mmX20mm	5
15A 100V N-CH MOSFET	2
130V RMS 200V PEAK 6500A ZENER	2
35A 400V Bridge Rectifier	1
Diode, BYV72E–150 20A 150V	2
MOS Gate Driver, 500V IR #IR2125	2
MOSFET, RF **SD2942**	1
Switching Regulator, 0.75A LM3578AN 2	
NTC, In-rush Current Limiter	2
EMI Filter, 6A 250V with Fuse	1
14 Stage Bin Cntr/OSC 74HC4060	1

These parts are included in the FM30 kit (part number ***GFM30SPARES***):

Item	***Quantity***
Fuse, 1.5A Slo-blo 5mmX20mm	6
Fuse, 3A Slo-blo 5mmX20mm	5
15A 100V N-CH MOSFET	2
130V RMS 200V PEAK 6500A ZENER	2
35A 400V Bridge Rectifier	1
Diode, BYV72E–150 20A 150V	2
MOS Gate Driver, 500V IR #IR2125	2
BLF245 FET PWR Transistor	1
Switching Regulator, 0.75A LM3578AN	2
NTC, In-rush Current Limiter	2
EMI Filter, 6A 250V with Fuse	1
14 Stage Bin Cntr/OSC 74HC4060	1

Factory Service Instructions

To obtain factory service, complete the bottom half of this page, include it with the unit, and ship to:

International Radio & Electronics Corporation
25166 Leer Drive
Elkhart, Indiana, U.S.A. 46514-5425

For units in warranty (within 5 years of purchase from any authorized Crown Dealer): We pay for ground UPS shipments from anywhere in the continental U.S. and Federal Express Second Day service from Hawaii and Alaska to the factory and back to you. Expedited service/shipment is available for an additional charge. You may forward your receipt for shipping charges which we will reimburse. We do not cover any charges for shipping outside the U.S. or any of the expenses involved in clearing customs.

If you have any questions about your Crown Broadcast product, please contact Crown Broadcast Customer Service at:

Telephone: (866) 262-8917 or (574) 262-8900
Fax: (866) 262-8909

Name: Company:

Shipping Address:

Phone Number: Fax:

Model: Serial Number: Purchase Date:

Nature of the Problem
(Describe the conditions that existed when the problem occurred and what attempts were made to correct it.)

_____

_____

_____

_____

_____

_____

_____

Other equipment in your system: _____

If warranty has expired, payment will be: ☐ Cash/Check ☐ VISA ☐ Mastercard
☐ Please Quote before servicing

Card Number: _____ Exp. Date: _____ Signature: _____

Return Shipment Preference if other than UPS Ground: ☐ Expedite Shipment ☐ Other _____

ENCLOSE WITH UNIT—DO NOT MAIL SEPARATELY

Appendix

Transmitter Output Efficiency

RF Power Output-FM 30

PADC Volts	PADC Amps	RF Power	Efficiency
27.9	2.16	34	56
26.2	2.09	32	58
24.7	2.02	30	60
22.5	1.91	26	60
20.2	1.77	22	62
17.0	1.56	17	64
14.1	1.34	14	74
12.6	1.22	10	65
10.5	1.04	7	64
8.8	.88	5	65
6.6	.65	3	70
5.4	.53	2	70

Power measurements were made at 97.1 MHz. Voltage and current measurements were taken from the unit's built-in metering. The accuracy of the internal metering is better than 2%. Return loss of the RF load was greater than –34 dB at test frequency .

Transmitter Output Efficiency

RF Power Output-FM 150

PADC Volts	PADC Amps	RF Power	Efficiency
34.3	6.05	165	79.5
32.8	5.87	150	77.9
28.4	5.34	113	74.5
23.1	4.77	75	68.1
16.4	4.09	38	56.7
9.4	3.16	15	50.5

Power measurements were made at 97.9 MHz. Voltage and current measurements were taken from the unit's built-in metering. The accuracy of the internal metering is better than 2%. Return loss of the RF load was greater than –34 dB at test frequency .

RF Power Output-FM 300

PADC Volts	PADC Amps	RF Power	Efficiency
48.5	7.86	330	86.6
46.3	7.57	300	85.6
40.2	6.75	225	82.9
33.0	5.80	150	78.4
23.4	4.70	75	68.2
14.5	3.79	30	54.6

Power measurements were made at 97.9 MHz. Voltage and current measurements were taken from the unit's built-in metering. The accuracy of the internal metering is better than 2%. Return loss of the RF load was greater than –34 dB at test frequency .

Notes:

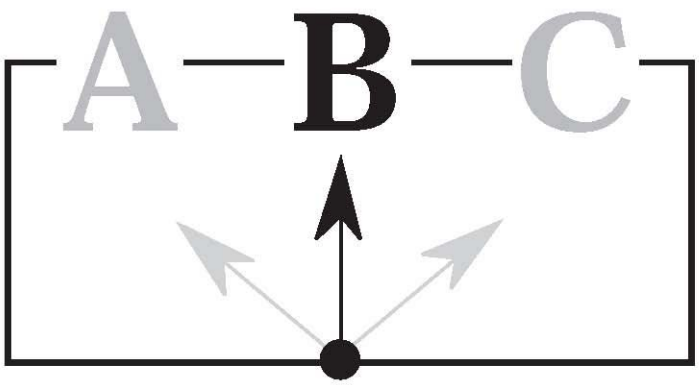

Glossary

The following pages define terms and abbreviations used throughout this manual.

AF	Audio Frequency; the frequencies between 20 Hz and 20 kHz in the electromagnetic spectrum
ALC	Automatic Level Control
AM	Amplitude Modulation; the process of impressing information on a radio-frequency signal by varying its amplitude.
Bandwidth	The range of frequencies available for signaling.
BCD	Binary-Coded Decimal; a digital system that uses binary codes to represent decimal digits.
BFO	Beat Frequency Oscillator
BNC	A bayonet locking connector for miniature coax; said to be short for Bayonet-Neill-Concelman.
Broadband	As used in the FM transmitter; refers to the entire audio spectrum as opposed to the spectrum influenced by the pre-emphasis; also called “Wideband”.
Carrier	A continuous signal which is modulated with a second; information– carrying signal.
Crosstalk	In FM broadcasting, the term generally refers to the interaction between the main (L+R) and the subcarrier (L_R) signals as opposed to “separation” which generally refers to leakage between left (L) and right (R) channels.
Density (program)	A high average of modulation over time.
Deviation	The amount by which the carrier frequency changes either side of the center frequency.
DIP	Dual In-line Pins; term used to describe a pin arrangement.
Distortion	The unwanted changes in signal wave shape that occur during transmission between two points.
DPM	Digital Panel Meter
EPROM	Erasable Programmable Read Only Memory
Exciter	(1) A circuit that supplies the initial oscillator used in the driver stage. (2) A transmitter configuration which excludes stereo generation and audio processing.

FET	Field-Effect Transistor
Frequency Synthesizer	A circuit that generates precise frequency signals by means of a single crystal oscillator in conjunction with frequency dividers and multipliers.
FM on	Frequency Modulation; the process of impressing a radio signal by varying its frequency.
FSK	Frequency Shift Keying; an F technique for shifting the frequency of the main carrier at a Morse code rate. Used in the on-air identification of frequencies.
Gain Reduction	The process of reducing the gain of a given amplifier.
Harmonics	Undesirable energy at integral multiples of a desired, fundamental frequency.
High Frequency	Frequencies in the 3.0 to 30.0 MHz range.
Highband	Frequencies affected by the pre-emphasis.
I/O	Input/Output
LED	Light Emitting Diode
Modulation	The process by which a carrier is varied to represent an information-carrying signal.
MOSFET	Metal Oxide Semiconductor Field Effect Transistor; A voltage-controlled device with high input impedance due to its electrically isolated gate.
Nearcast	A transmission within a localized geographic area (ranging from a single room to several kilometers)
PA	Power Amplifier
PAI	Power Amplifier Current
PAV	Power Amplifier Voltage
Pilot	A 19-kHz signal used for stereo transmissions.
Pre-emphasis	The deliberate accentuation of the higher audio frequencies; made possible by a high-pass filter.
Processing	The procedure and or circuits used to modify incoming audio to make it suitable for transmission.
Receiver	An option which adds incoming RF capability to an existing transmitter. See also “Translator.”

RF	Radio Frequency; (1) A specific portion of the electromagnetic spectrum between audio-frequency and the infrared portion. (2) A frequency useful for radio transmission (roughly 10 kHz and 100,000 MHz).
SCA	Subsidiary Communications Authorization; see “subcarrier.”
S/N	Signal to Noise
Spurious products	Unintended signals present on the transmission output terminal.
Stability	A tolerance or measure of how well a component, circuit, or system maintains constant operating conditions over a period of time.
Stereo Pilot	See “Pilot.”
Stereo separation	The amount of left channel information that bleeds into the right channel (or vice versa).
Subcarrier	A carrier signal which operates at a lower frequency than the main carrier frequency and which modulates the main carrier.
Suppression	The process used to hold back or stop certain frequencies.
SWR	Standing Wave Ratio; on a transmission line, the ratio of the maximum voltage to the minimum voltage or maximum current to the minimum current; also the ratio of load impedance to intended (50 ohms) load impedance.
THD	Total Harmonic Distortion
Translator	A transmitter designed to internally change an FM signal from one frequency to another for retransmission. Used in conjunction with terrestrial networks.
Satellator	A transmitter equipped with an FSK ID option for re-broadcasting a satellite fed signal.
VSWR	Voltage Standing Wave Ratio; see “SWR.”
Wideband	See “Broadband.”
VCO	Voltage Controlled Oscillator

Index

Symbols

19–kHz
  level adjustment 5–3
  phase adjustment 5–3

A

AC. See Power: input
ALC 3–3,3–7,4–7
Altitude
    operating range 1–8
Amperes PA DC 3–3,3–8
Amplifier
    RF 4–13
    bias set 5–6
Antenna 2–12
    mismatch 3–3
Applications 1–3
Audio
    broadband 3-5
    distortion 5–9
    frequency 5–8
    high 3–5
    input connectors 2-13, 4–3
    input level 1-7, 3–5
    monitor connections 2–15,4–5
    performance 5–7
    pre-emphasis 3–5
    processing 3–5,4–10
    wide 3–5
Audio processor 4-3
    adjustments 5–2
    circuit description 4–3
    circuit location 6–3
    indicators 3–5
    input 3–5
    reference drawings 6–5

B

Backup
    transmitter use 1–4
Bandwidth
    RF 5–8
Battery. See power: input
Bias set 5–6
Broadband. See Audio: broadband

C

Cables
    audio input 2–13
Carrier 4–12,5–8
    automatic turnoff 2–16,3–8,5–6,5–10
    frequency 5–8, 5-10
Carrier switch 3–4,5–5
Channel. See Frequency
    main 5–10
    main into sub 5–10
    sub into main 5–10
Chassis
    circuit 4–14
Circuit boards
    audio processor 4–3,6–5
    stereo generator 4–4, 6-5
Circuits
    chassis 4–14
    display 4–10
    metering 4–8
    motherboard 4–8
    part numbering 4–2
    power regulator 4–12
    RF exciter 4–6
    stereo generator 4–4
    voltage regulator 4–11
Components
    numbering 4–2
Composite
    input 2–14
    input connection 2–13
    output adjustment 5–3
Connectors
    audio input 2–13
    audio monitoring 2–15
    composite in 2–15
    remote I/O 2–16
    RF input 2–12
    RF output 2–12
    RF output monitoring 2–12
    SCA In 2–14
    XLR 2–13, 4–3
Cooling Fan 3-3, 3-8
    control 4-7
Coverage area 1-4
Crosstalk 1-7
    measurements 5-9
Current limit
    PA 5-5

D
DC. See Power: input
De-emphasis 2-15, 5-2, 5-7
    jumpers 2-15
Delay
    program failure to carrier turnoff 2-16, 5-6
Dimensions 1-9
Display
    circuit description 4-10
    front panel 3-2, 3-5, 3-7
    modulation calibration 5-5
Distortion 1-7
    audio 5-9
    harmonic 4-5

E
Emissions 5-8
Exciter. See RF exciter
    configuration 1-4

F
Fan (PA)
    control 4-7
    cooling 3-8
Fault
    indicators 4-10
    input 3-8
    lock 3-8
    power 3-8
    servicing 3-8
    SWR 3-8
    temperature 3-8
FCC guidelines 1-9, 5-8, 5-10
Frequency
    carrier 5-8, 5-10
    measurement 5-4
    pilot 5-8
    receiver 2-8
    response 5-8
    selection 2-5, 5-3
        receiver 2-8
        samples 2-6
    synthesizer 5-10
Frequency synthesizer. See RF exciter
    adjustments 5-4
Front panel
    display modulation calibration 5-5
FSK 1-5, 1-6
    measurements 5-4
Fuses 2-4, 7-4

G
Gain control 3-5
Gain reduction 4-3
Gain switches
    input 3-6

H
Harmonic distortion 4-5
Harmonics 5-8
Heatsink 3-8
Highband 3-5
    processing 4-4
Humidity
    operating range 1-8

I
I/O connector 1-2, 2-14
    pin out 2-16, 2-17
Indicators
    audio processor 3-5
    fault 3-8, 4-10
    highband 3-5
    LED 3-5, 3-7, 4-10
    pilot 3-5
    wideband 3-5, 5-6
Input
    audio connectors 2-13
    composite 2-14
    fault 3-8
    gain switches 3-6
    program
        fault 2-16
    SCA connection 2-14

L
Labels 1-10
LEDs 3-5, 4-10
Line voltage 2-2, 2-3
Lock
    status 4-6
Lock fault 3-8

M
Metering 1-3
    circuit description 4-7
Metering circuit
    adjustments 5-4
    location 4-7
Modulation 2-12, 3-5, 5-3, 5-7, 5-8
    calibration 5-5
    compensator 2-7
    display 3-5
    percentage 3-5, 5-9
Monitor
    audio 2-15, 4-5

M (continued)

Mono
- operation 2-13, 3-6

Motherboard
- circuit description 4-8

Multimeter 3-7
- front panel 3-3

N

Nearcast
- transmitter use 1-6

Networks
- satellite fed 1-6
- terrestrial fed 1-5

Noise 1-8, 3-8
- measurements 5-9

O

Operating environment 1-8, 2-2

Options 1-3, 1-4, 1-6

Output
- power 1-7, 3-7
  - display 3-7

Output filter 4-14

P

Part numbering 4-2

Parts
- spares 7-2

Performance
- checklist 5-7
- tests 5-10

Pilot frequency 5-8

Pilot indicator 3-5

Power
- AC supply 4-14
- AC voltage selection 2-2
- battery 1-4, 1-8, 2-5
- failure 2-2
- fault 3-8
- input 1-8, 2-2, 2-5
  - FCC guidelines 5-10
- output 1-3, 1-7, 5-8
  - display 3-7
- output filter 4-14
- regulator
  - circuit description 4-12
- RF 3-3, 3-7
- RF amplifier 4-13
- transformer 4-14

Power switch 3-4

Pre-emphasis 1-7, 4-4, 5-2, 5-7
- curve 2-15, 4-4

Processing
- audio 1-2, 3-5
- control 3-6
- control setting 3-3
- highband 3-5, 4-4

Program failure 2-16, 5-10

Program source 2-13, 3-6

R

Receiver
- frequency selection 2-8
- option 1-5
- specifications 1-10

Reflectometer 4-14

Regulatory approvals 1-9

Remote control 1-2

Remote I/O
- connector 2-16
- pin out 2-17

Remote operation 2-16

Repair
- warranty 7-3

RF
- amplifier 4-13
  - bias set 5-6
- bandwidth 1-8, 5-8
- exciter 1-3, 2-12
  - circuit description 4-6
  - circuit location 1-3, 4-6
- input 1-5, 2-12
- output 1-2, 1-5, 1-7, 3-3, 3-7
  - impedance 1-7
- output filter 4-14

S

Safety 1-10

Satellator
- transmitter use 1-6

SCA 1-5
- input connection 2-14

Sensitivity
- monaural 1-10
- stereo 1-10

Separation
- stereo 1-7
- stereo generator 5-2

Service
- warranty 7-3

Service instructions 7-5

Spares kit 7-4

Specifications
- receiver 1-10
- transmitter 1-7

S (continued)

Stand alone
    transmitter use 1-4
Stereo
    separation 1-7, 5-9
Stereo generator 1-2, 2-14
    adjustments 5-2
    bypassing 2-14
    circuit description 4-4
    circuit location 6-3
Subcarrier 5-10
    38kHz 5-10
Suppression
    subcarrier 1-8
Switches
    carrier 3-3, 3-4, 5-5
    input gain 3-5, 3-6
    power 3-2, 3-4
    receiver 2-8
    stereo-mono 3-3, 3-6
SWR 3-7
    calibrate 5-5
    fault 3-8
Synchronization 4-11
Synthesizer, See RF exciter

T

Temperature
    fault 3-8
    operating range 1-8, 5-10
    PA 3-3, 3-8
Test point
    voltage 3-8
Tests
    performance 5-7, 5-10
Time-out
    program input failure 2-16
Transformer 4-14
Translator
    transmitter use 1-5

V

VCO 4-6
Voltage
    AC selection 2-2
Voltage regulator 3-8
    adjustments 5-6
    circuit description 4-11
Voltage selection 2-2
Voltmeter
    display 3-8
Volts
    PA DC 3-3, 3-8
VSWR 1-2, 2-12

W

Warranty 7-3
Weight 1-9
Wideband 3-5

X

XLR connectors 2-13