The BR5200DC Door Controller

The BR5200DC Door Controller controls the functionality of Receivers, in addition to components at an egress zone, such as magnetic locks, magnetic switches, and LF Antennas. These components are wired to the IO board. The Door Controller contains an IO board in addition to the IF board and Microprocessor.

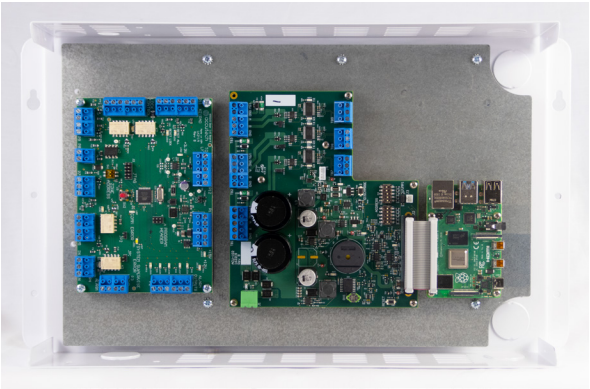

Figure 3.2 - The BR5200DC Door Controller (without cover)
Part Number: 700335

Door Controller Specifications

Electrical

Power Requirements: 19.5VAC @ 1A max

Mechanical

Construction: Powder-Coated Metal Case
Enclosure Size: 16.75” x 9.60” x 3.25”
Weight (including enclosure, supercapacitor, and tamper switch): approximately 9 lbs

Operating Characteristics:

Operating Temperature: 32 to 120 degrees Fahrenheit
Intended for indoor use only.

Duty Cycle

Rated for continuous use.

The BR5200RXC Controller

Contains an IF board and an IP-addressable Microprocessor which control the functionality of system Receivers. The system’s Receivers are wired to the Controller’s IF Board, allowing for RS485 communication with the Microprocessor.

The RXC Controller is used in facilities that require more Receivers than can be connected to the available Door Controllers, such as large facilities with only a few egress zones.

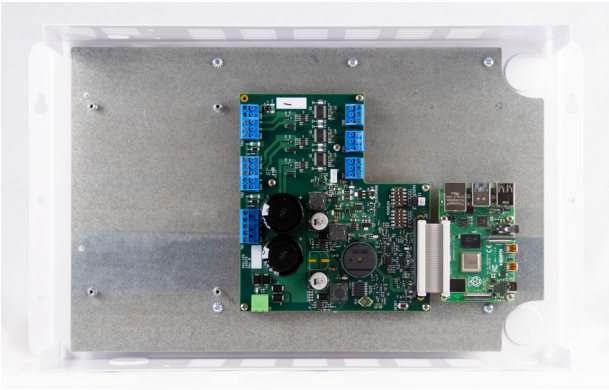

Figure 3.3 - The BR5200RXC Controller (without cover)
Part Number: 700336

RXC Controller Specifications

Electrical

Power Requirements: 19.5VAC @ 850mA max

Mechanical

Construction: Powder-Coated Metal Case
Enclosure Size: 16.75” x 9.60” x 3.25”
Weight (including enclosure, supercapacitor, and tamper switch): approximately 8.8 lbs

Operating Characteristics:

Operating Temperature: 32 to 120 degrees Fahrenheit
Intended for indoor use only.

Duty Cycle

Rated for continuous use.

Positioning

The recommended location for the BR5200DC Door Controller is above the drop ceiling of an egress zone, or in an equipment/utility closet.

Mounting

To mount the BR5200DC Door Controller:

1) Mark-out and drill 4 mounting holes in the wall corresponding to the holes of the Controller.

2) Using appropriate hardware for the mounting surface, install the four anchors, then the upper two screws, leaving about 1/8th of an inch exposed. NOTE: The hole spacing on the Controller is 16” on centers, which is typical wall stud spacing.

3) Align the large upper “key-way” holes with the screws and gently guide the Controller onto the screws, allowing the unit to hang from these screws temporarily.

4) Install the last two mounting screws and verify all four screws are tightened.

5) Replace the Controller cover and secure to base with security screws.

Remote Mounting

To mount the Controller remotely, such as in a utility or equipment closet, follow the same instructions as you would to mount the Controller locally. The Controller can also be mounted on a server rack.

Wiring

For information on wiring various components to the Controller, see the chapters on those components.

To wire the IO board to the IF board on the Door Controller, see figure 3.8.

Note: Use UL-approved, plenum-rated cable.

The Microprocessor

The Microprocessor communicates with the IF board via RS485 communication at 115200 Baud via its USB ports (USB to RS485 cables). It is powered by the IF board with 5VDC @ 600mA max via GPIO/ribbon cable.

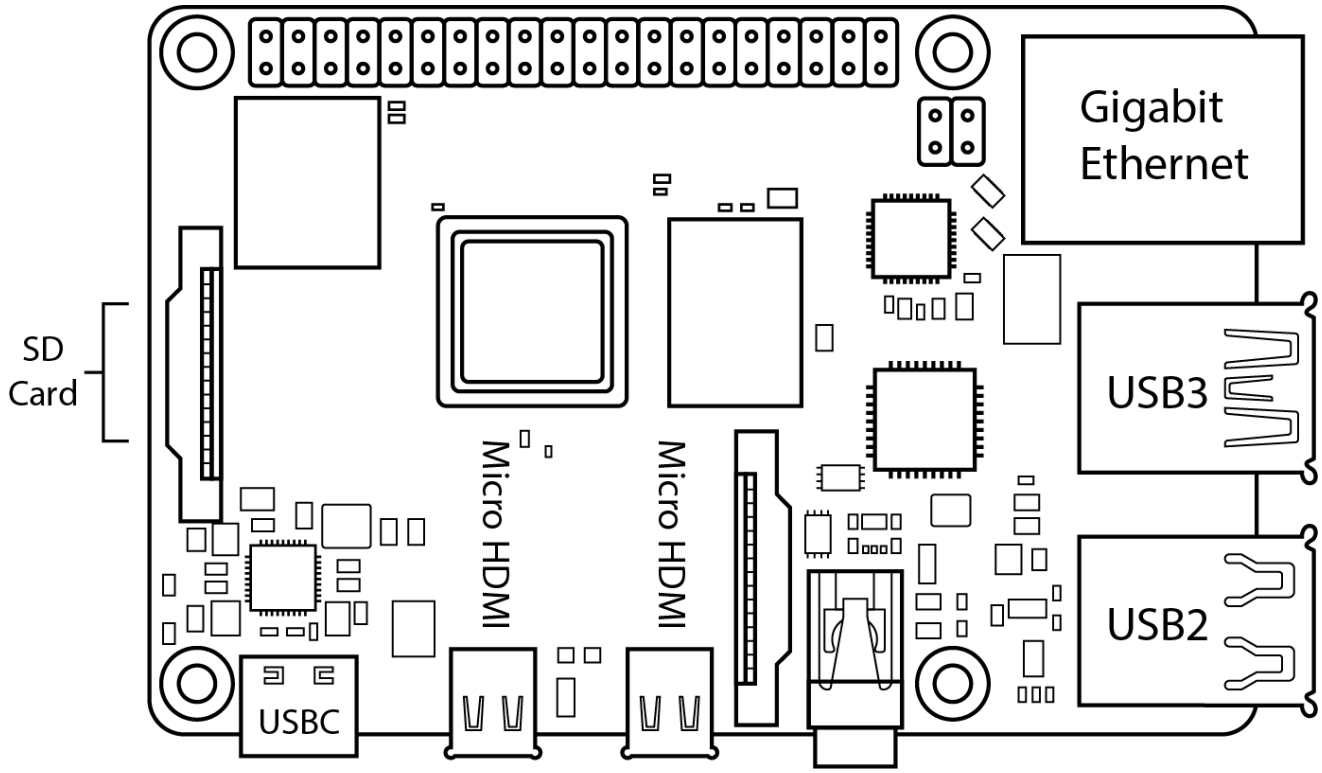

Figure 3.4 - The Microprocessor

The IF Board

The IF board communicates with the IO board at 115200 baud rate. It is powered by 19.5VAC @ 250mA max from an independent external 5A power supply. It is connected to supercapacitors to prevent detrimental power loss/shutdown.

The IF board provides 15VDC of power to the IO board and Receivers, and provides 5VDC of power to the Microprocessor via GPIO/Ribbon cable.

The SW1 and SW2 dip switches on the board are used for configuring the address of the Controller.

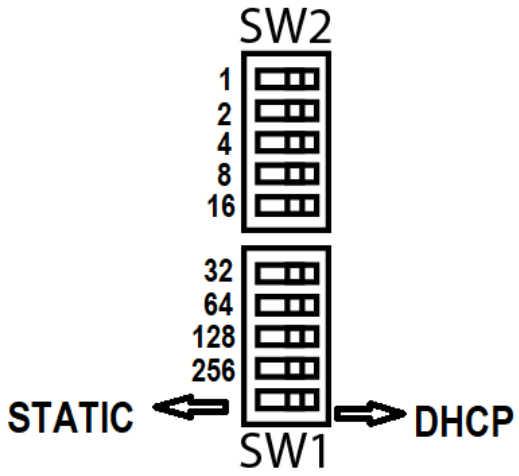

Figure 3.5 - IF Board SW1 and SW2 dip switch values

STATIC mode (bottom switch on SW1 at left/ON position)

Used to manually set the address of the Controller.

Each switch represents a number, and the address is the sum of the numbers for switches in the ON (Left) position.

For example, if the first switch, which represents 1, and the second switch which represents 2 are in the ON/left position, then the address of the Controller is 3.

DHCP mode (bottom switch on SW1 in OFF/right position)

Used when the facility's server is setting the address of the board via software, so the Controller's address does not need to be configured on the board. All other switches must be in the OFF/left position when in this mode.

The Circuit Board

Jumpers

JP1
Normal Operation: Open
Open: RS485_TB1 termination disabled
Closed: RS485_TB1 termination active

JP2
Normal Operation: Open
Open: RS485_TB2 termination disabled
Closed: RS485_TB2 termination active

JP3
Normal Operation: Open
Open: RS485_TB3 termination disabled
Closed: RS485_TB3 termination active

JP4
Normal Operation: Open
Open: RTC battery voltage detection disabled
Closed: RTC battery voltage detection active

JP5
Normal Operation: Closed
Open: Super capacitor voltage detection disabled
Closed: Super capacitor voltage detection active

JP7
Normal Operation: Open
Open: Tamper switch detection disabled
Closed: Tamper switch detection active

JP9
Normal Operation: Open
Open: Stand-alone manufacture test disabled
Closed: Stand-alone manufacture test active

JP10
Normal Operation: Open
Open: Auto-boot timer disabled
Closed: Auto-boot timer active

LEDs

On = active
Off = inactive

LED1
15V active

LED2
5V active

LED3
3.3V active

LED4
Software debug active

LED5
RS485_TB1 TX active

LED6
RS485_TB1 RX active

LED7
RS485_TB2 TX active

LED8
RS485_TB2 RX active

LED9
RS485_TB3 TX active

LED10
RS485_TB3 RX active

LED11
AC_DC power rectifier active

LED13
Super capacitor voltage charge active

Switches

SW2
Zone setting
Switch 5 = 1
Switch 4 = 2
Switch 3 = 4
Switch 2 = 8
Switch 1 = 16

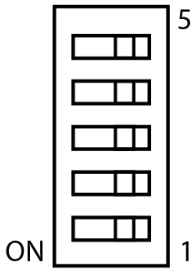

SW1
Zone & network type setting
Switch 5 = 32
Switch 4 = 64
Switch 3 = 128
Switch 2 = 256
Switch 1 = network type

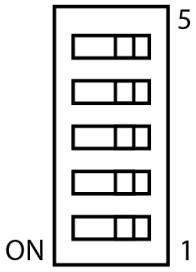

SW3
Normal Operation: Pressed
Super capacitor voltage discharge active

SW4
Normal Operation: Pressed
Software reset after SW4 pressed

Terminals

J1 (Power to Board)

J1-1 (Unregulated 19.5VAC)

TB1 (Power & RS485 to Receiver)

TB1-1 +15V
(+15VDC to IO Board)

TB1-2 GND
(Ground)

TB1-3 A
(RS485-A)

TB1-4 B
(RS485-B)

TB1-5 GND
(RS485-Ground)

TB2 (Power & RS485 to Receiver)

TB2-1 +15V
(+15VDC to Receiver)

TB2-2 GND
(Ground)

TB2-3 A
(RS485-A)

TB2-4 B
(RS485-B)

TB2-5 GND
(RS485-Ground)

TB3 (Power & RS485 to Receiver)

TB3-1 +15V
(+15VDC to Receiver)

TB3-2 GND
(Ground)

TB3-3 A
(RS485-A)

TB3-4 B
(RS485-B)

TB3-5 GND
(RS485-Ground)

TB7 (RS485 to Microprocessor USB2)

TB7-1 A
(RS485-A)

TB7-2 B
(RS485-B)

TB7-3 GND
(RS485-Ground)

TB8 (RS485 to Microprocessor USB3)

TB8-1 A
(RS485-A)

TB8-2 B
(RS485-B)

TB8-3 GND
(RS485-Ground)

TB9 (RS485 to Microprocessor USB3)

TB9-1 A
(RS485-A)

TB9-2 B
(RS485-B)

TB9-3 GND
(RS485-Ground)

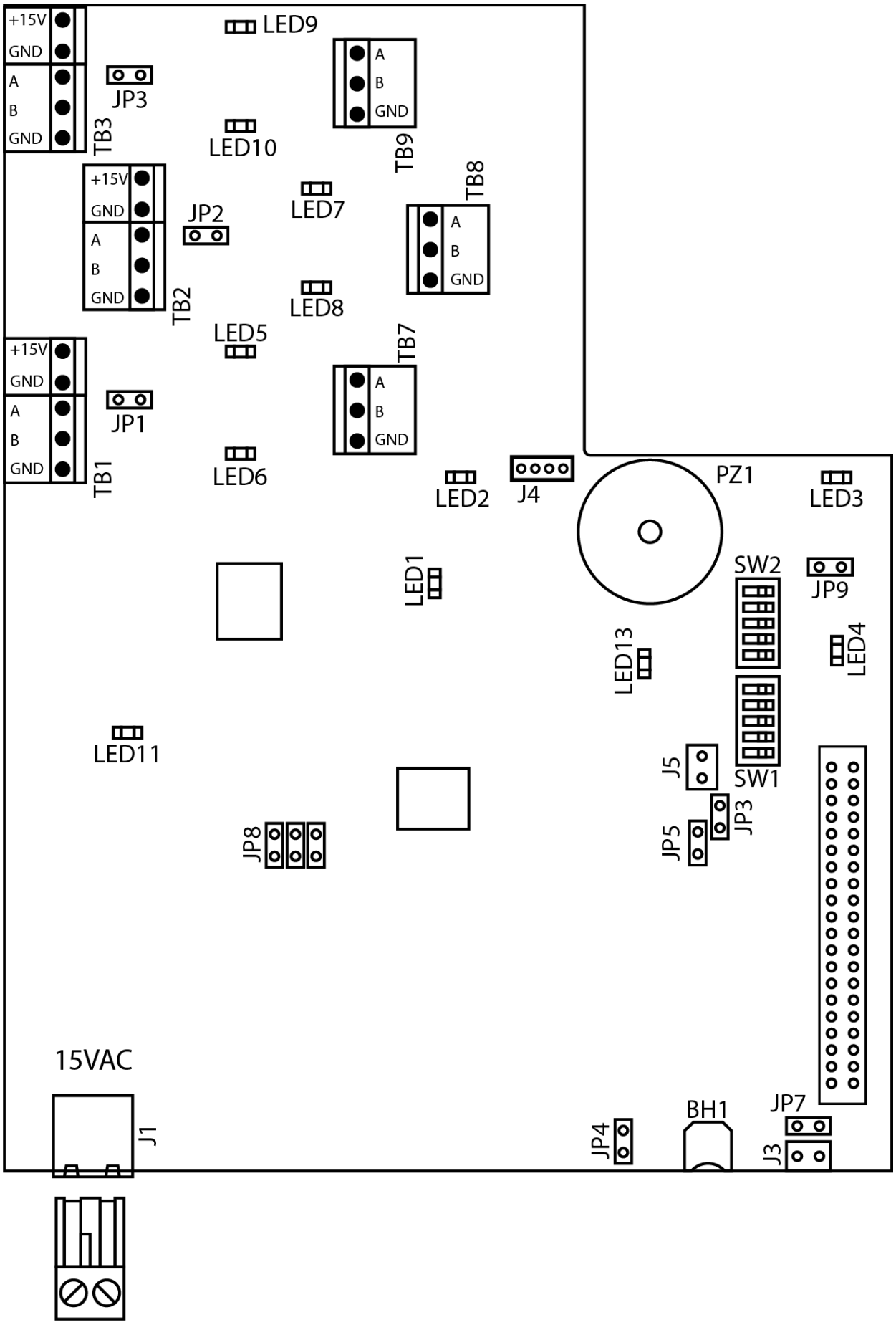

Figure 3.6 - The IF Board

The IO Board

In Door Controllers, the IO board communicates with the I/F board at 115200 baud rate via RS485 communication. It is powered with 15VDC output from the I/F board.

The Circuit Board

Jumpers

JP1
Provides 12VDC to COM of P3

JP2
Provides 12VDC to COM of P5

Switches

SW1
Not currently used

LEDs

On = active
Off = inactive

LED1
Comm Error active

LED2
Reset All active

LED3
+3.3V active

LED4
12V OUT active

LED5
Tag Detection active

LED6
Roll Call alarm active

LED7
Band Alarm active

LED8
Perimeter Alarm active

LED9
Door Ajar alarm active

LED10
Loiter Alarm active

LED11
System Supervise Error active

LED12
+12V active

LED13
Reset Lock active

LED14
Lock active

LED15
+15V active

Terminals

P1 (IF Board connections)
P1-1 +15V
(+15VDC)

P1-2 (GND)
(Ground)

P1-3 A
(RS485-A)

P1-4 B
(RS485-B)

P1-5 GND
(RS485-Ground)

P2 (Alarm Outputs)

P2-1 LOITER
(10.95VDC @ 50mA)

P2-2 DOOR AJAR
(10.95VDC @ 50mA Out on Door Ajar alarm)

P2-3 GND
(Ground)

P2-4 PERIMETER
(10.90VDC @ 50mA Out on Perimeter Alarm)

P2-5 BAND ALARM
(10.95VDC @ 50mA Out on Band Alarm)

P2-6 ROLL CALL ALARM
(10.90VDC @ 50mA Out on Roll Call alarm)

P3 (EXIT ALARM)

P3-1 N/C
(Normally Closed)

P3-1 COM
(Common)

P3-3 N/O
(Normally Open)

P3-4 GND
(Ground)

P4 (Perimeter and BR Lockdown Inputs)

P4-1 LOCK DOWN
(12VDC in from 12V Out)

P4-2 12V OUT
(12VDC Out)

P4-3 PERIM
(12VDC in from 12V Out)

P5 (TAG DETECT)

P5-1 N/C
(Normally Closed)

P5-2 COM
(Common)

P5-3 N/O
(Normally Open)

P5-4 GND
(Ground)

P7 (DOOR POSITION)

P7-1 OUT
(12VDC Out)

P7-2 IN
(12VDC In)

P7-3 GND
(Ground)

P8 (Fire Panel Interface Connections)

P8-1 OUT
(12VDC Out)

P8-2 IN
(12VDC In)

P9 (Magnetic Lock DSM and Delayed Egress)

P9-1 LOCK STATUS
(12VDC Out for Lock Status)

P9-2 LOCK OUT
(12VDC In for Lock Status)

P9-3 DEI OUT
(12VDC Out for Delayed Egress)

P9-4 DEI IN
(12VDC In for Delayed Egress)

P10 (LOCK CONTROL)

P10-1 LOCK PWR
(12VDC Out to Lock Pin 1)

P10-2 LOCK GND
(Ground to Lock Pin 2)

P10-3 RESET COM
(COM to Lock Pin 5)

P10-4 RESET N/O
(N/O to Lock Pin 6)

P10-5 LOCK COM
(COM to Lock Pin 3)

P10-6 LOCK N/O
(N/O to Lock Pin 4)

P11 (KEYPAD)

P11-1 PWR
(12VDC Out)

P11-2 GND
(Ground)

P11-3 RESET ALL
(12VDC)

P11-4 RESET LOCK
(12VDC)

P11-5 TAG DETECT OUT
(12VDC @ 50mA)

P11-6 ALARM OUT
(12VDC @ 50mA)

P12 (TO LF)

P12-1 +15V
(+15VDC Out)

P12-2 GND
(Ground)

P12-3 A
(RS485-A)

P12-4 B
(RS485-B)

P12-5 GND
(RS485-Ground)

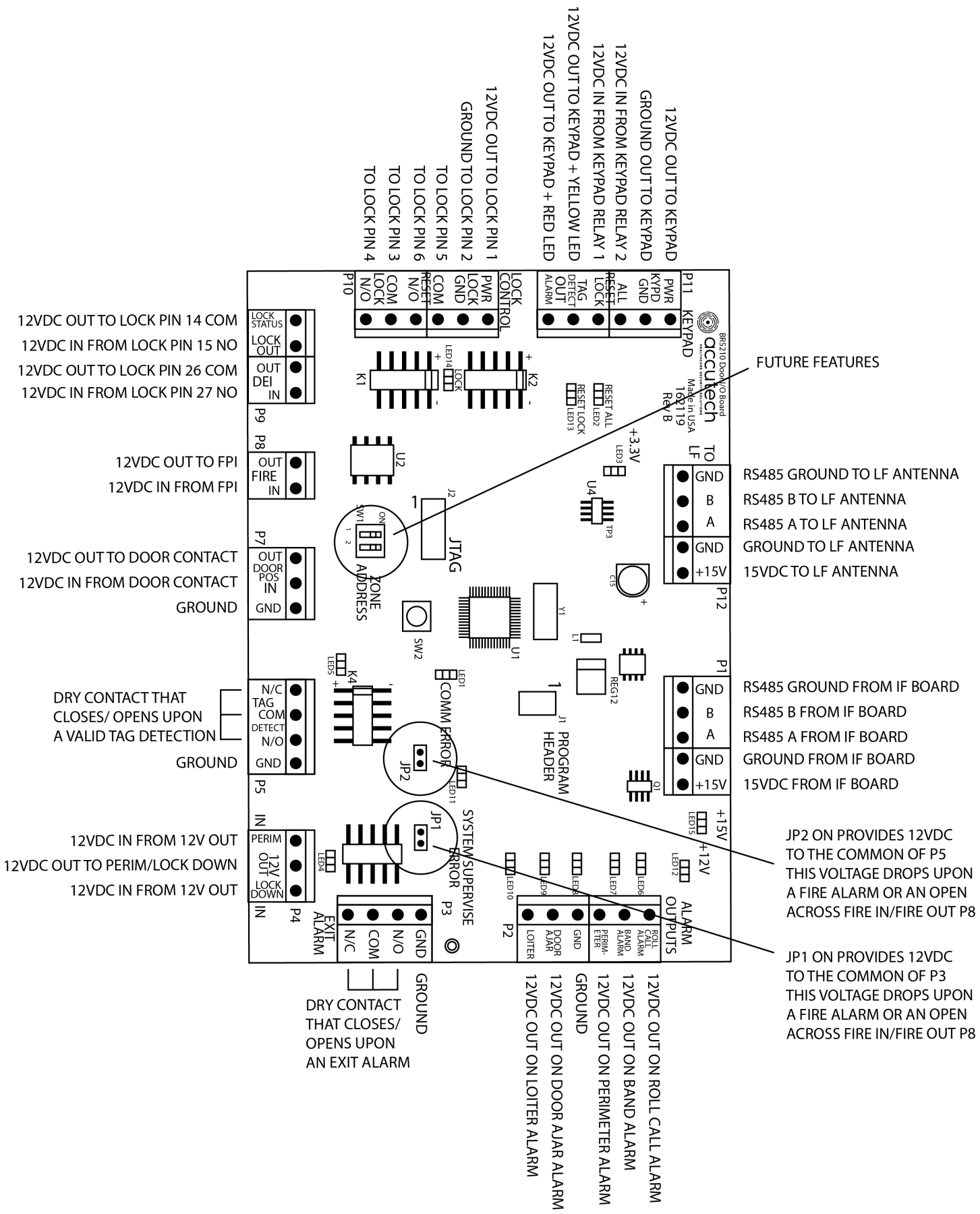

Figure 3.7 - The IO Board

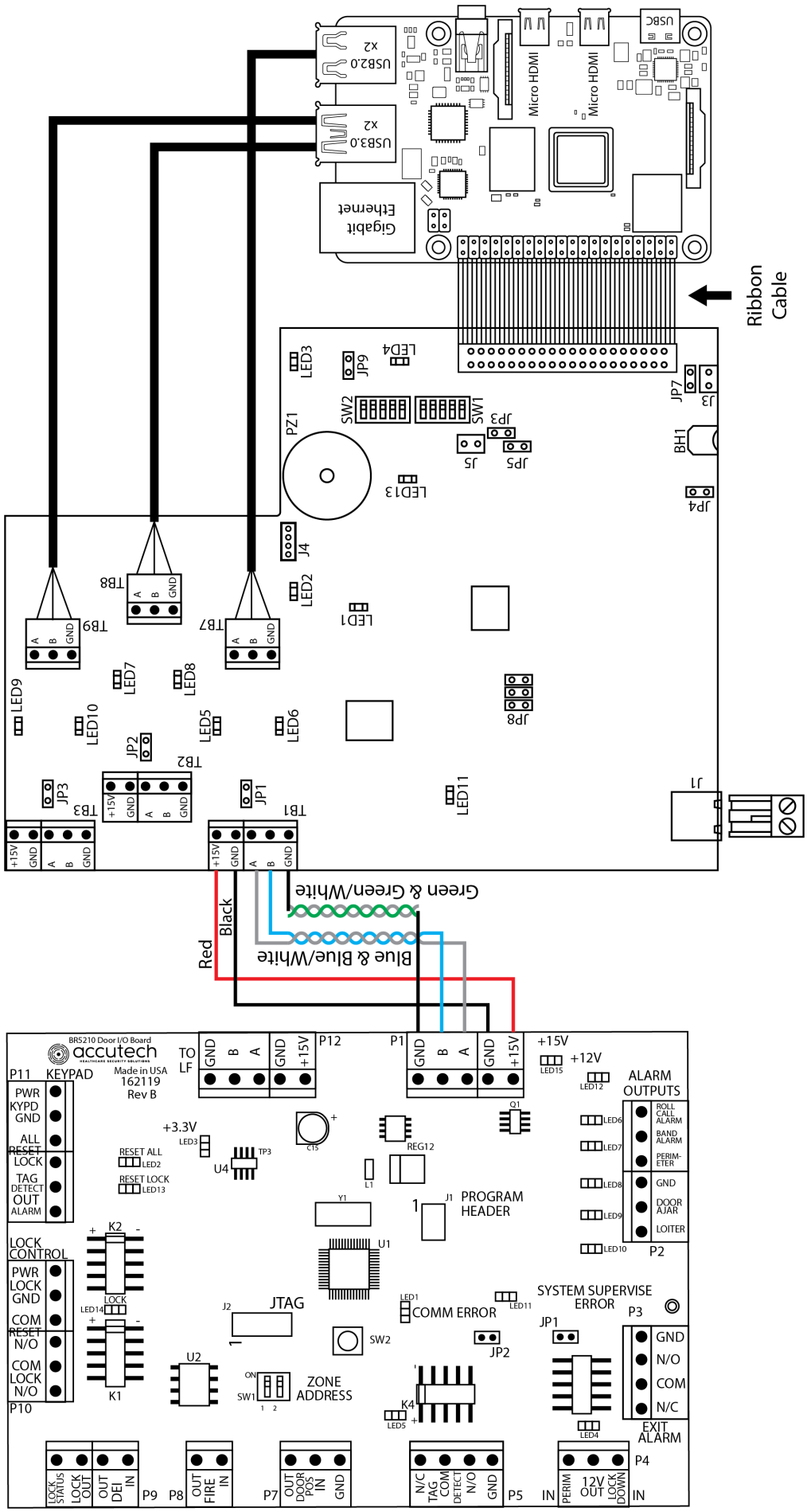

Figure 3.8 - Wiring the IO board to the IF board in the Door Controller

Note: Use one specific twisted pair for A and B.

accutech
HEALTHCARE SECURITY SOLUTIONS

Chapter 4
The LF Antenna

The LF Antenna

- Specifications
- Functionality
- Positioning
- Stagger Tuning
- Mounting
- Wiring
- The Circuit Board

Figure 4.1 - The LF Antenna (with cover)
Part Number: 762019

Specifications

Electrical

Operating Voltage: Minimum 15VDC
Current Consumption: Maximum: 350 mA

Terminal Block Ratings

Maximum 300 V, 10A on a single pin

Mechanical

Construction: Injection molded ABS
Size: 17.50” x 7.00” x 1.50” approximately
Weight: 1.88 US pounds
Mounting Surface: Four 3/16” screws

Operating Characteristics:

Transmit Frequency: Nominal 134KHz (127KHz to 138KHz for stagger tuning)
Exciter Range: up to 10 feet radius (360°)
Communication: RS485
Baud Rate: 115200**FCC ID:** JM7-HWHY-662019

IC: 2683A-662019

Environmental

Operating Temperature: 32° to 120° Fahrenheit
Intended for indoor use only.

Duty Cycle

Rated for continuous use.

Functionality

When a Tag enters the LF Antenna's Tx field, the Tag activates and transmits an RF signal to a standalone Receiver. This is referred to as a Tag Detection event (Figure 4.2).

The LF Antenna has three transmitters. An X antenna horizontally at the bottom, a vertical Y antenna in the center and a multi-loop Z antenna embedded in the board. Figure 4.2 shows the patterns of the LF Antennas. Once tuned to the selected frequency or channel, they are collectively phase locked and moving in a wobbling and rotating pattern. This allows the Tag, once it enters the field to be in virtually any orientation and allow the coil to become excited. The Tag then transmits a 418mHz signal to the Receiver.

The LF Antenna interfaces with the Controller's IO board. It is powered via plenum 18/2 connection to the IO board, which provides 15VDC of power. Cat 5 is used for RS485 communication with the IO board.

The Antenna's continuous nominal transmit frequency is 134KHz, and can be tuned from 127KHz to 138KHz for stagger tuning purposes (see stagger tuning section). LED arrays on the board indicate how well the antennas are tuned. Dip switches on the circuit board of each antenna are configured to tune the Tx Antennas to the set channel/frequency the LF is programmed for. See figure 4.9 for dip switch configurations.

The BR5200 LF Antenna can also be configured as a primary or secondary antenna via the SW1 mode selector on the board (figure 4.10). This is in case a secondary antenna is needed in a zone, such as in a triple elevator setup.

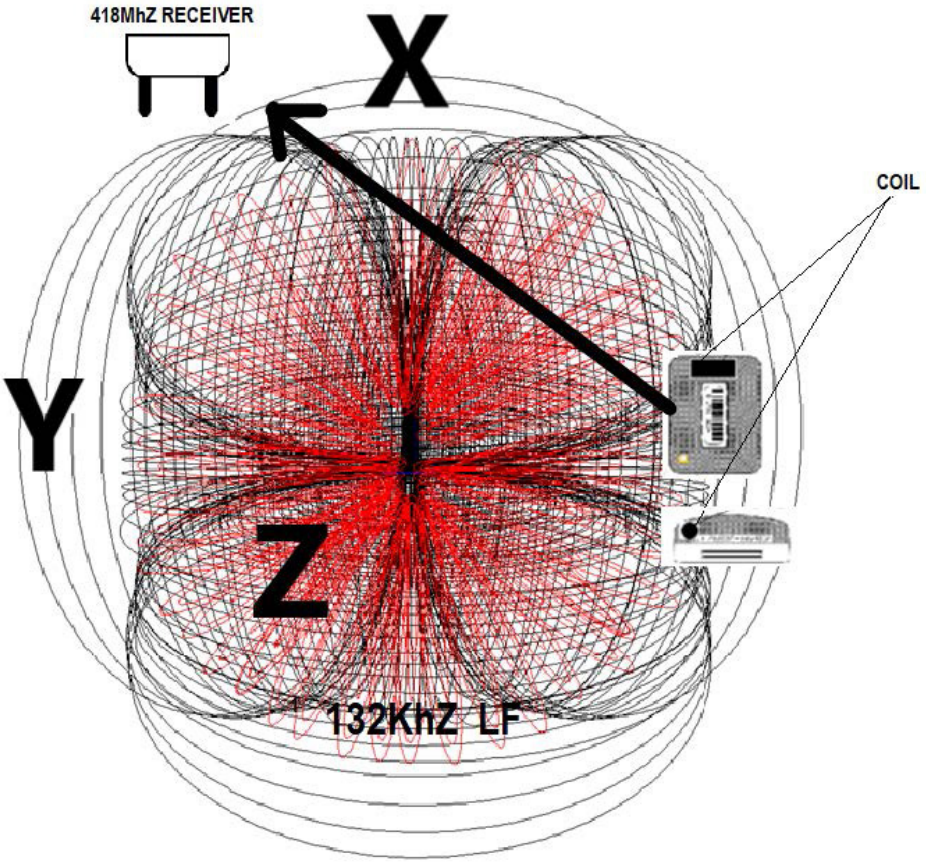

Figure 4.2 - Tag Detection Event

Positioning

The recommended location for the LF Antenna is within the intended monitored egress zone, on the wall next to the latch side of the door/ elevator. Its lowest point should be about 2 feet above the floor.

Mount the LF Antenna at least 3 inches away from any type of metal, including

- Metal door frames
- Metal studs
- Metal lathe walls
- Metal electrical box
- Metal conduit
- Metal pipes

In addition, the LF Antenna should be positioned within 18 inches of the monitored door or elevator to assure proper coverage. The recommended distance is 3 to 6 inches.

If the Controllers of adjacent zones are closer than 50 feet, implement Stagger Tuning to avoid crosstalk (activated Tags from one zone being detected in another zone).

If the Controllers of adjacent zones are closer than 10 feet apart, or the LF Antenna fields are overlapping, Keep the LF Frequency the same to prevent the Controllers from competing to activate and read the Tag. (Figure 4.3).

Note: Access Control Readers must be positioned a minimum of 2' away from any LF Antennas.

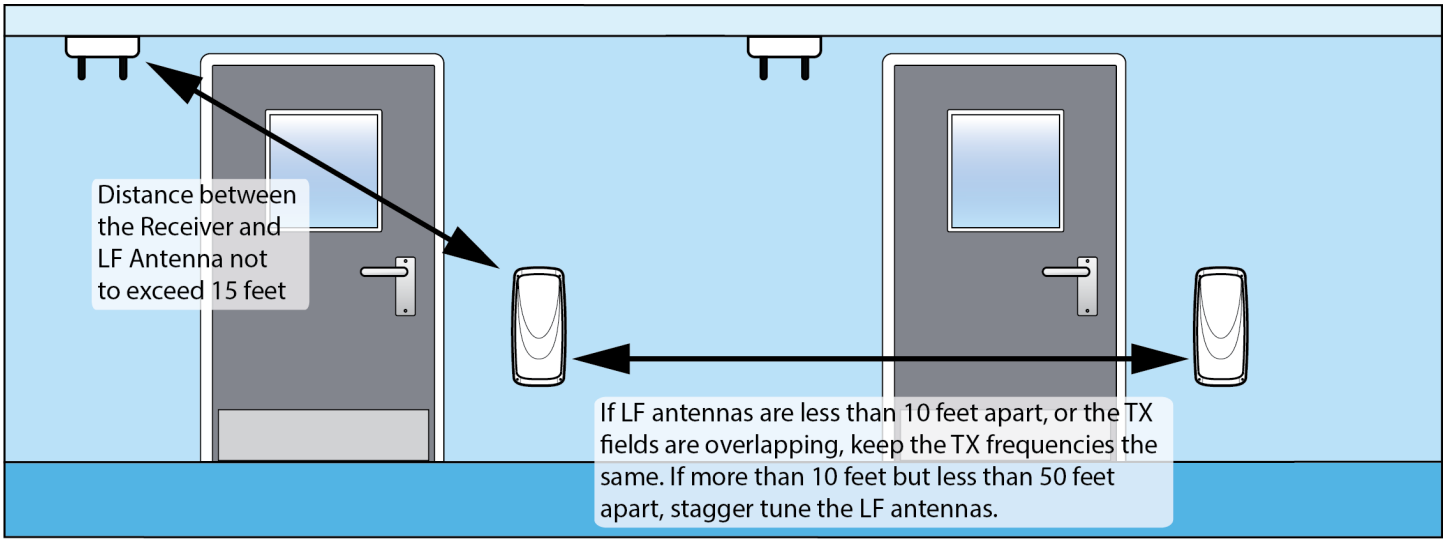

Figure 4.3 - LF Antenna Positioning

Bleed Through/Adjacent Patient Rooms

The position of the antenna will vary if patient rooms are adjacent to the zones. If a patient room is behind the wall on one side of an egress zone, position the antenna on the wall on the other side of the zone, where there is no patient room.

If there are patient rooms on both sides of an egress zone, Y-shield paint and grounding straps must be utilized. Use the following diagram and order of installation:

Y-Shield order of installation:

1) Install GSX50 grounding straps
2) Install GS3 grounding plate
3) Ground GS3 to earth ground
4) NSF34 Y-Shield paint on 10'x10' area
5) Plaster over straps, as needed
6) Paint or wallpaper
7) Install LF Antenna

Patient room on one side of a Door

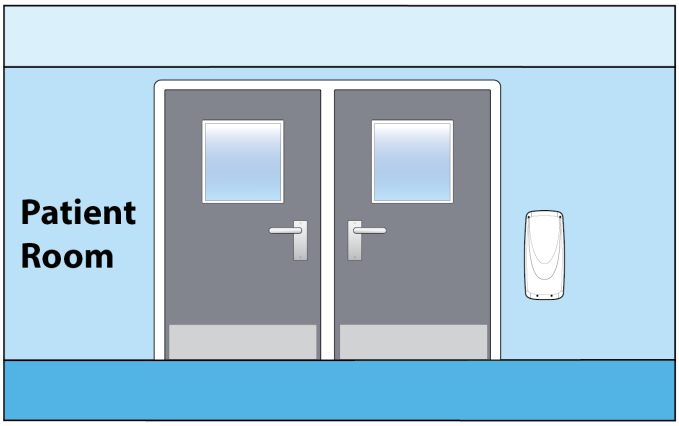

Patient room one one side of a Hallway

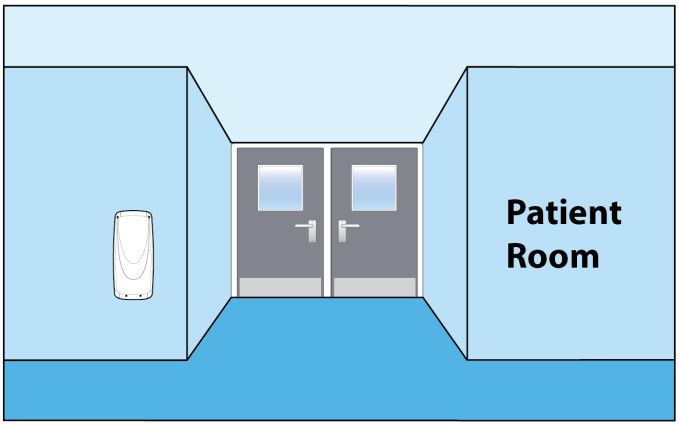

Patient room on both sides of an exit

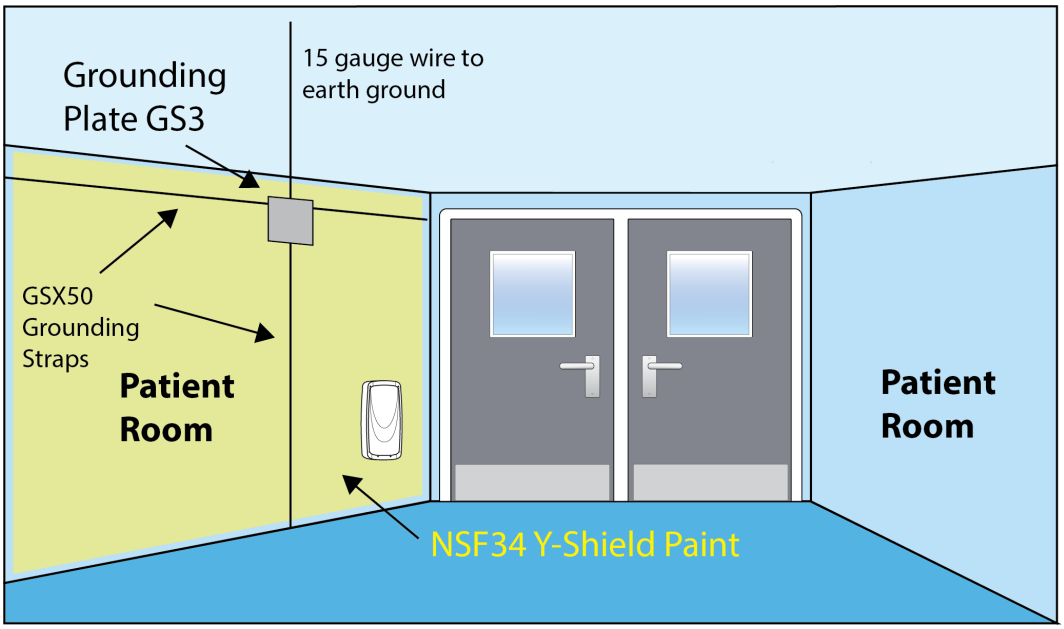

Y-SHIELD order of installation:

1) Install GSX50 grounding straps
2) Install GS3 grounding Plate
3) Ground GS3 to earth ground
4) NSF34 Y-Shield paint 10'x10' area
5) Plaster over straps, as needed
6) Paint or wallpaper
7) Install LF antenna

Figure 4.4 - LF Antenna Installation around Patient Rooms

Stagger Tuning

Stagger tuning of the Antennas should be used to prevent crosstalk between zones if Controllers/doors are within 50' on the same floor, or floor-to-floor. Change the frequency of the Controllers to prevent them from interfering with one another.

However, if Controllers/doors are within 10' on the same floor, and/or their Tx fields are overlapping, keep them on the same frequency to prevent the Controllers from competing to activate and read the Tag. (Figure 4.5),

See Figure 4.9 for information on how to configure the antenna's dip switches to the different channels/frequencies. Each Low Frequency Tuning switch on an antenna must be set to the same channel/frequency.

See the Controller Configuration Software section of the manual for information on how to set the channel/frequency in the software to match the frequency set on the board.

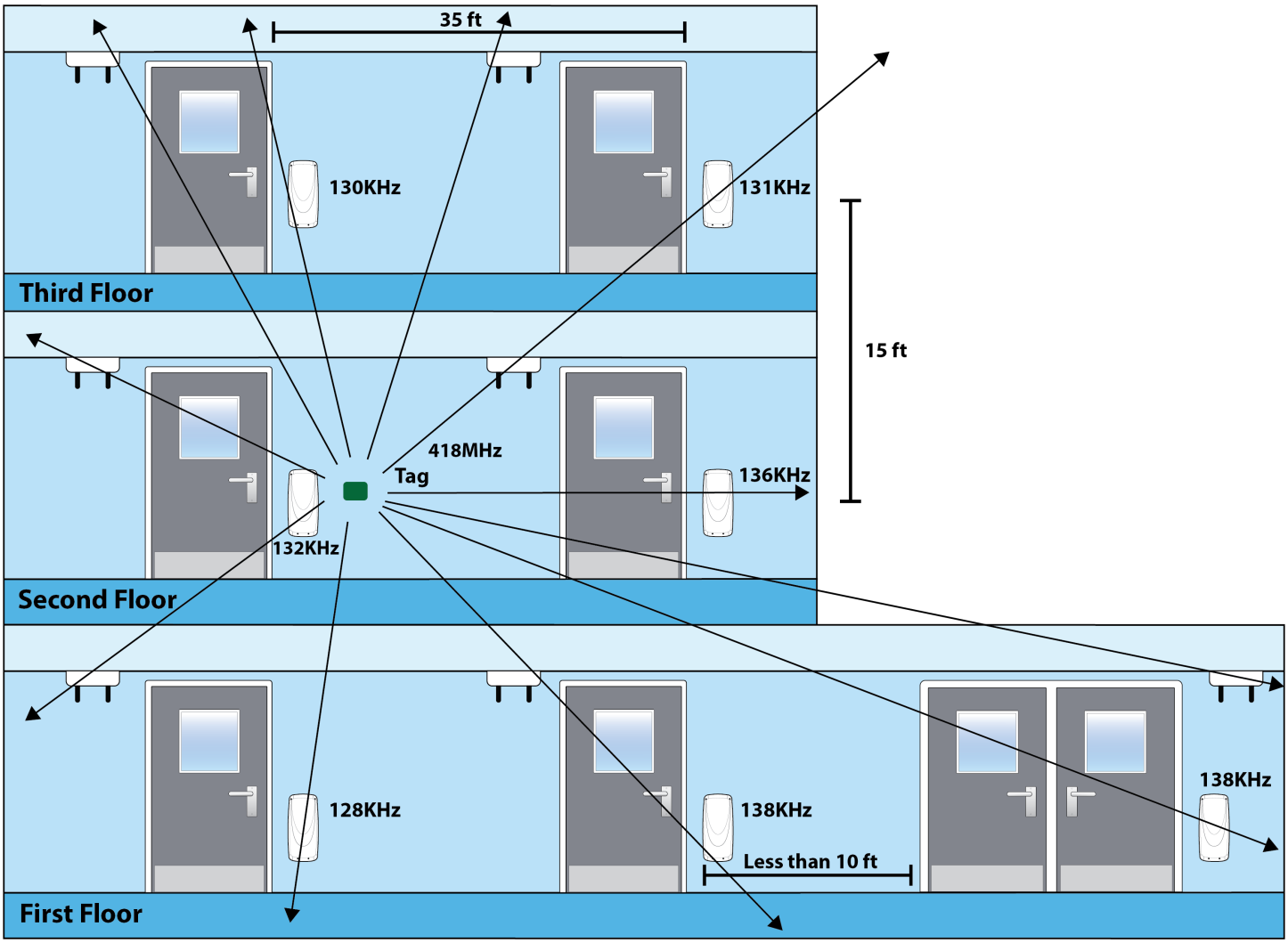

Figure 4.5 - Stagger Tuning

Mounting

To mount the LF Antenna:

1) Remove the screws and LF Antenna cover.

2) Locate, align, mark out, and drill 4 mounting holes in the wall that correspond to the mounting holes on the LF Antenna.

3) Using appropriate hardware for the mounting surface, install the four anchors.

4) Install the upper screws. Leave about 1/8th of an inch of each screw exposed.

5) Make any wiring accommodations (such as fishing wires through the back cover or planning conduit/Panduit interface) that are more easily completed while the LF Antenna is unmounted.

6) Install the last two mounting screws, then tighten all four mounting screws.

7) Proceed to wiring.

Note: The LF Antenna is NOT meant for ceiling mounting, as its field will bleed through to the floor above and activate Tags on patients.

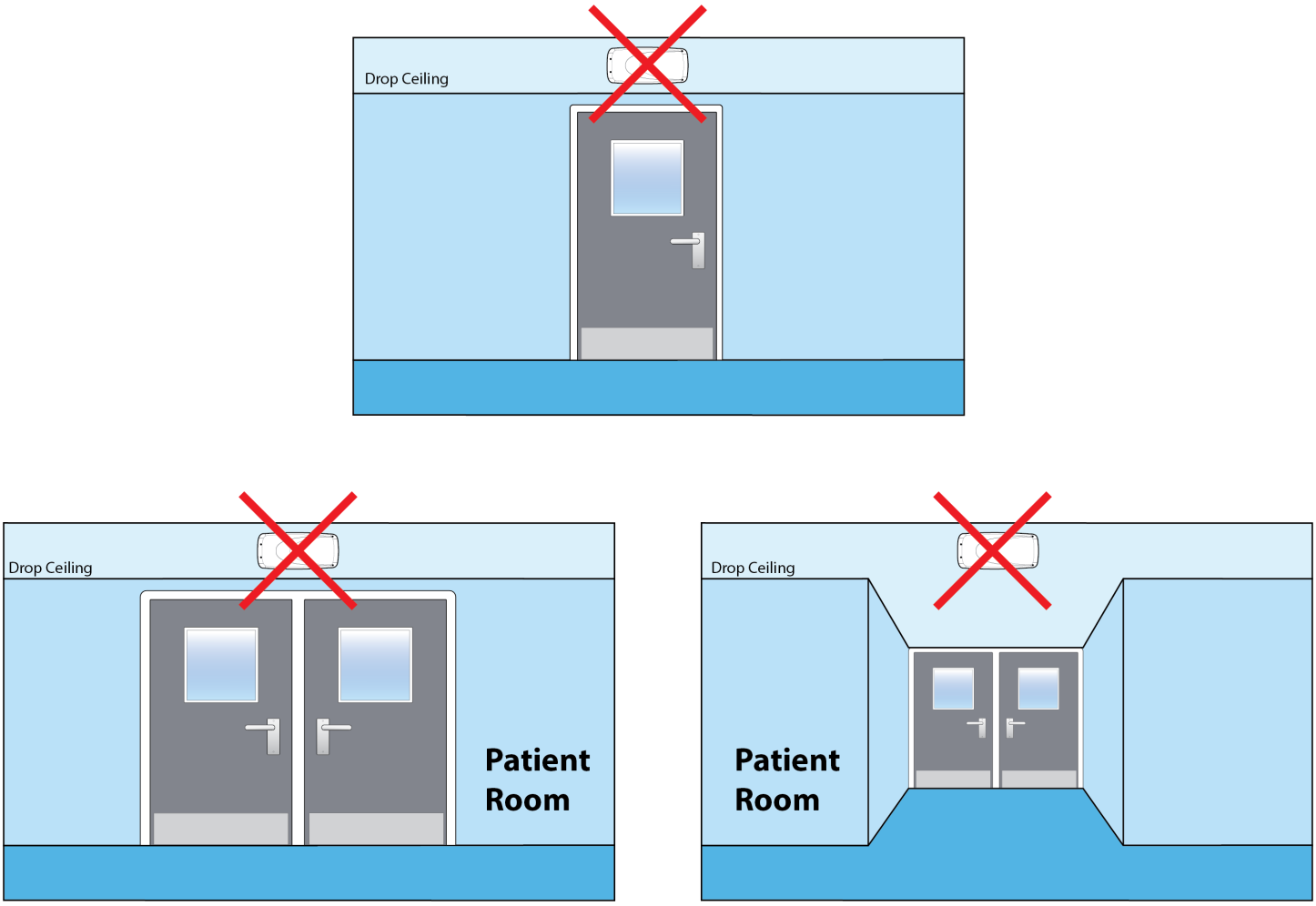

Figure 4.6 - Improper Ceiling Mounting

Wiring

Use plenum 18/2-gauge wire for 15VDC power and ground. Use Cat5 for RS485 communication.

Note: Use UL-approved, plenum-rated cable.

Note: Use one specific twisted pair for A and B.

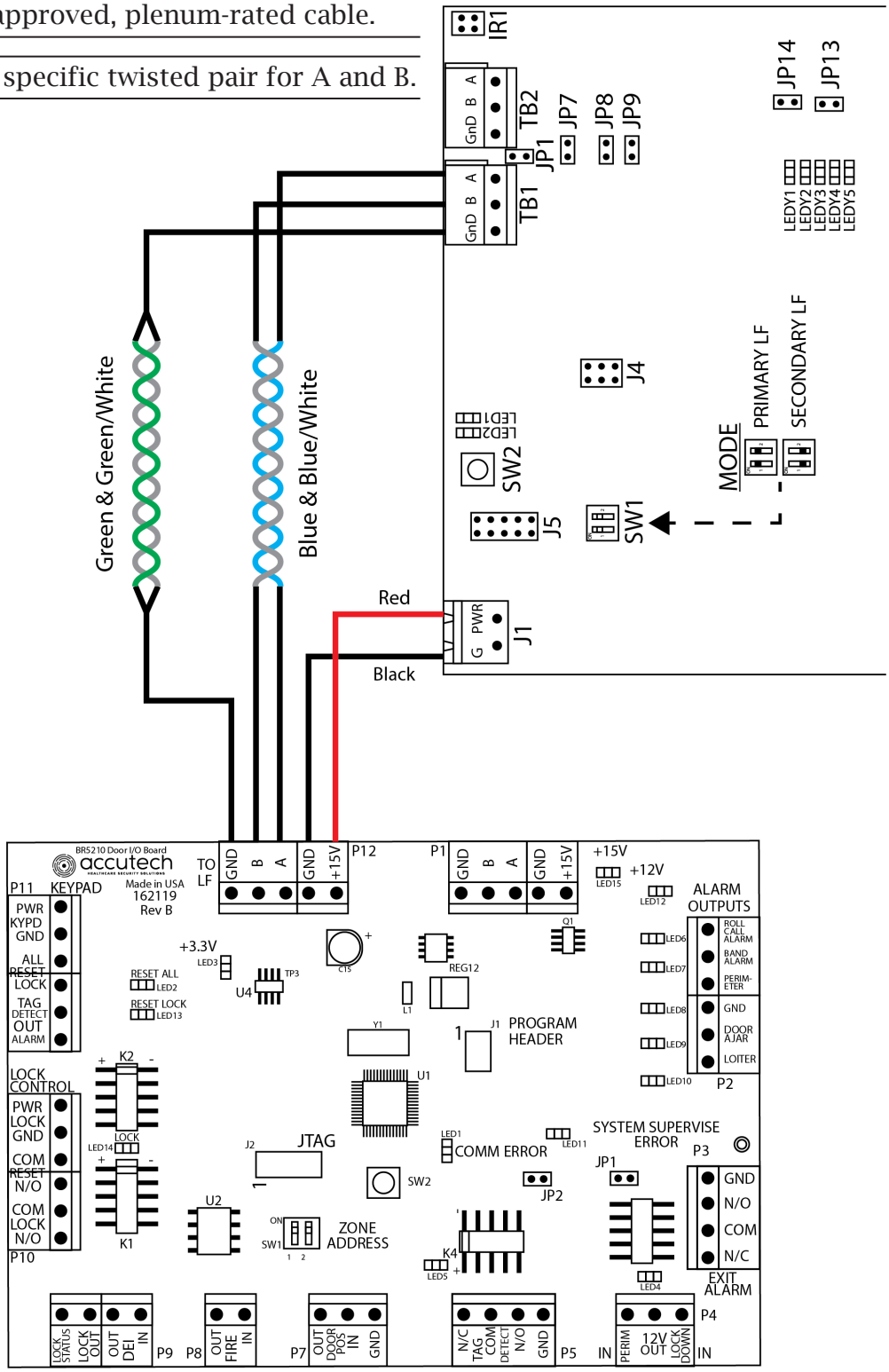

Figure 4.7 - Wiring the LF Antenna to the IO Board

The Circuit Board

- LEDs
- LED Arrays
- Jumpers
- Low Frequency Tuners
- Switches
- Tamper Infrared Sensor
- Terminals

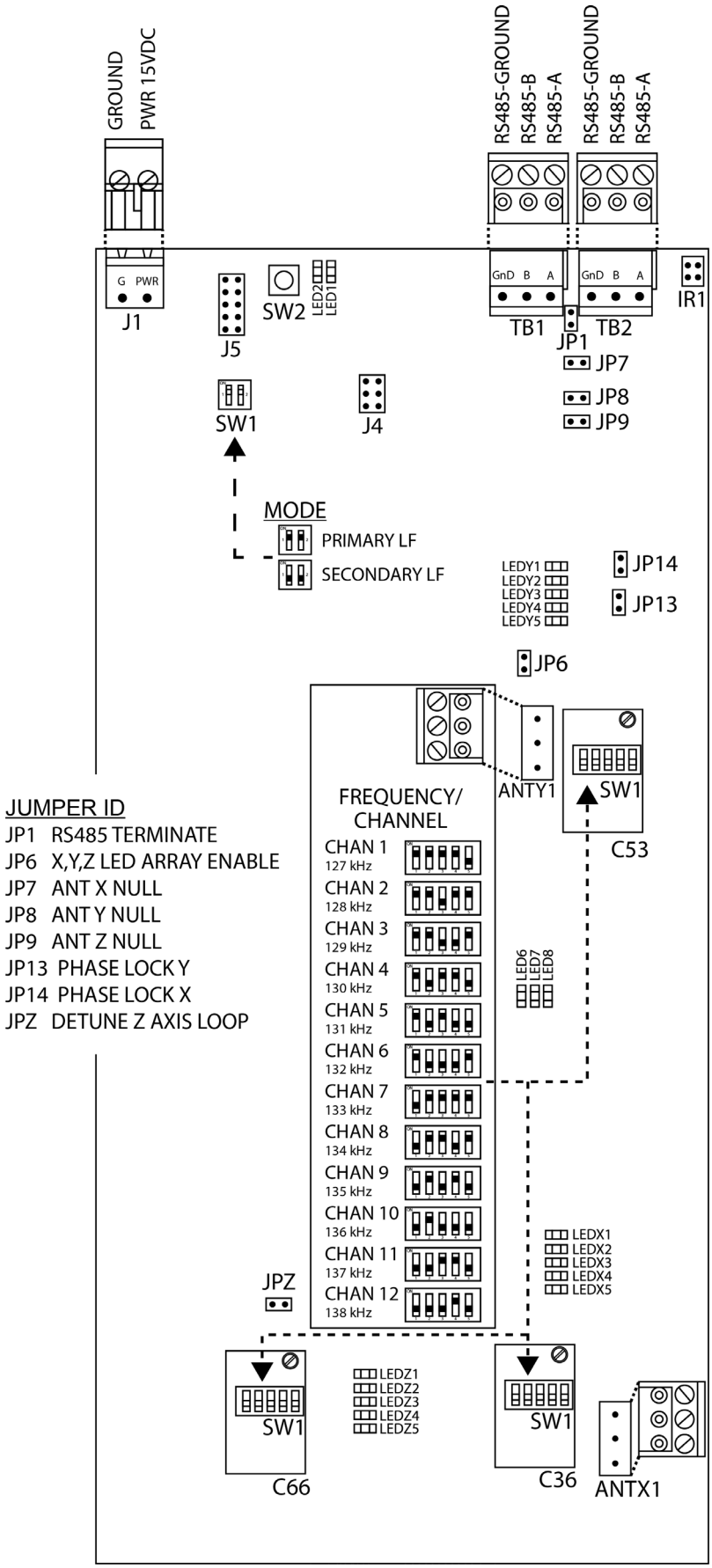

Figure 4.8 - The LF Antenna Circuit Board

LEDs

LED1
Error (Red)
This LED will flash red in event of an error.

LED2
Power (Green)
This LED will light up green when the LF Antenna is powered, and will turn off in the event of an error.

LED Arrays

LEDX1 – LEDX5
(LED Array X-Axis) (Blue)
This LED array indicates that the X-axis is powered and displays its relative Tx Output.

LEDY1 – LEDY5
(LED Array Y-Axis) (Blue)
This LED array indicates that the Y-axis is powered and displays its relative Tx Output.

LEDZ1 – LEDZ5
(LED Array Z-Axis) (Blue)
This LED array indicates that the Z-axis is powered and displays its relative Tx Output.

Jumpers

JP1
(RS485, Terminating Resistor)
Default position: In
In: Add resistor
Out: Remove resistor

JP6
(X,Y,Z LED Array Enable)
Default position: In
In: Enabled
Out: Disabled

JP7
(Ant X null)
Default Position: Out
In: X-axis nullified
Out: X-axis active

JP8
(Ant Y null)
Default Position: Out
In: Y-axis nullified
Out: Y-axis active

JP9
(Ant Z null)
Default Position: Out
In: Z-axis nullified
Out: Z-axis active

JP13
(Phase Lock Y)
Default Position: In
In: Phase Lock
Out: No Phase Lock

JP14
(Phase Lock X)
Default Position: In
In: Phase Lock
Out: No Phase Lock

JPZ
(Detune Z Axis Loop)
Default Position: Out
In: detunes Z loop for nulling setup
Out: normal Z loop function

Low Frequency Tuners

See Figure 4.9 for frequency/channel settings

SW1 at C36
Sets frequency of the Tx Activation field for the X-axis

SW1 at C53
Sets frequency of the Tx Activation field for the Y-axis

SW1 at C66
Sets frequency of the Tx Activation field for the Z-axis

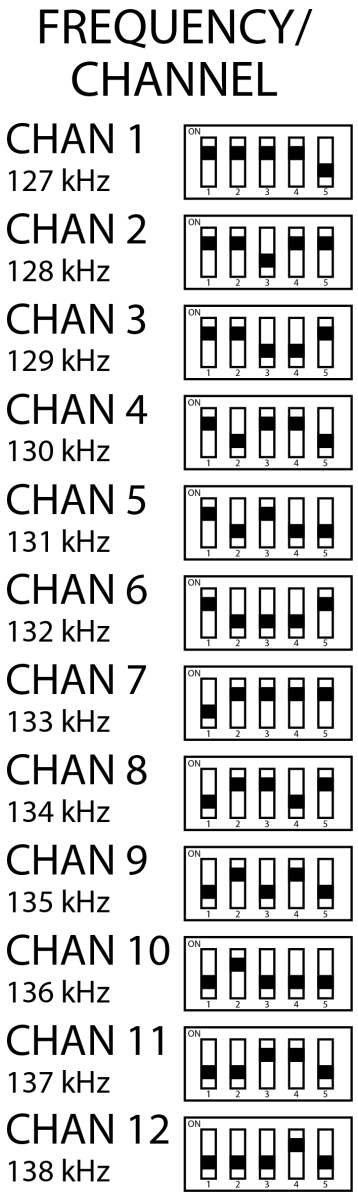

Figure 4.9 - LF Antenna SW1 Switch Configurations

Switches

SW1
(Mode Selector)

SW2
(Micro Reset Push Button)

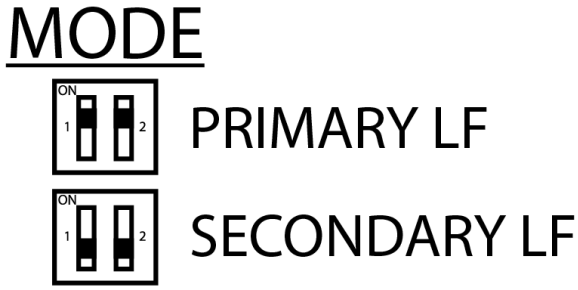

Figure 4.10 - SW1 Mode Selector Configurations

Tamper Infrared Sensor

The tamper infrared sensor (IR1) is provided to prevent unauthorized access to the LF Antenna. An Alarm will be generated if the LF Antenna cover is removed. (Power to the unit is required for the infrared sensor to function)

Terminals

J1 (Power)

J1-1 (Power 15VDC regulated)

J1-2 (Ground)

TB1 (RS485)

TB1-1 (RS485-A)

TB1-2 (RS485-B)

TB1-3 (Ground)

TB2 (RS485)

TB2-1 (RS485-A)

TB2-2 (RS485-B)

TB2-3 (Ground)

accutech
HEALTHCARE SECURITY SOLUTIONS

Chapter 5
The Receiver

The Receiver

- Specifications
- The Circuit Board
- Mounting
- Positioning
- Wiring
- Receiver Settings

The Receiver consists of two internal Receivers. Whether located at a monitored zone or in a hallway, the Receiver picks up the signal from the Tag and relays it to the Controller. Receivers located at monitored zones are addressed as Door Receivers and monitor both zone events and Band Removal/Roll Call events.

Receivers not associated with a monitored zone only monitor Band Removal/Roll Call events.

Figure 5.1 - Receiver (with cover)
Part Number: 762220

Specifications

Electrical

Operating Voltage: 15VDC @ 140mA
Communication: RS485 Half Duplex
Baud Rate: 230400

Mechanical

Construction: Injection molded ABS
Size: 7.25” x 7.25” x 1.76”
Weight: 12.7 oz

Operating Characteristics

Receive Frequency: 418 MHz
FCC ID: JM7-HWHY-662220
IC: 2683A-662220

Environmental

Operating temperature: 32° to 120° Fahrenheit
Intended for indoor use only.

Duty Cycle

Rated for continuous use.

The Circuit Board

Each receiver consists of two circuit boards. The following represents a single circuit board:

LEDs

LED3
(Power Indicator)

Jumpers

JP1
(RS485 Terminating Resistor)
Default position:
In:
Out:

Switches

SW1
(Individual Rx Address Dipswitches)

SW2
(Pair Rx Address Dipswitches)

SW3
(Micro Reset Button)

Terminals

P3 (Power & RS485)

P3-1 (15V Power)

P3-2 (Ground)

P3-3 (RS485-A)

P3-4 (RS485-B)

P3-5 (Ground)

P4 (Power & RS485)

P4-1 (15V Power)

P4-2 (Ground)

P4-3 (RS485-A)

P4-4 (RS485-B)

P4-5 (Ground)

Tamper Infrared Sensor

The tamper infrared sensor (IR1) is provided to prevent unauthorized access to the Receiver. An alarm will be generated if the Receiver cover is removed. (Power to the unit is required for the infrared sensor to function).

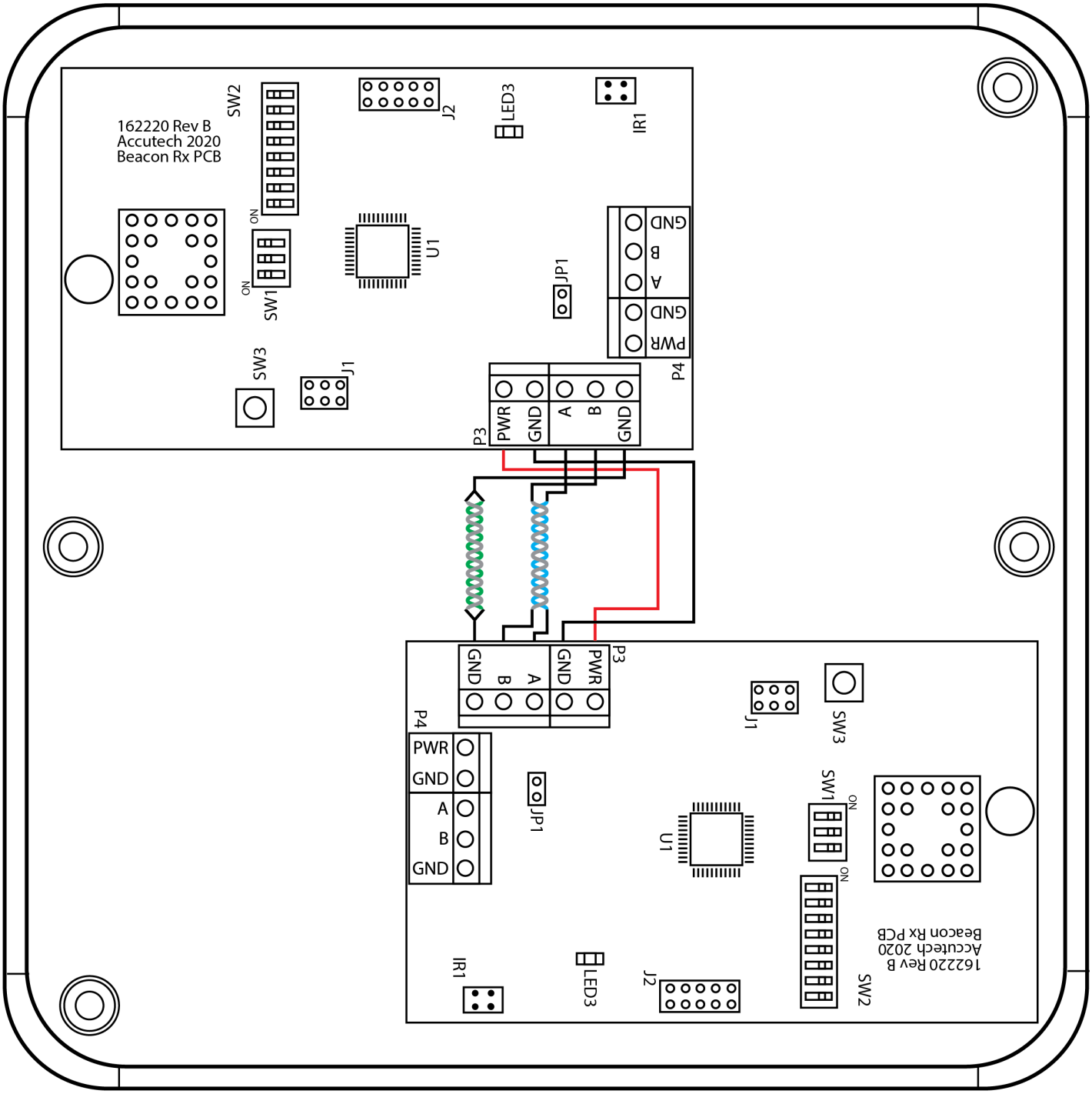

Figure 5.2 - Receiver Interior (with wiring)

Mounting

The Receiver comes with a mounting plate that allows it to be mounted to a drop tile ceiling.

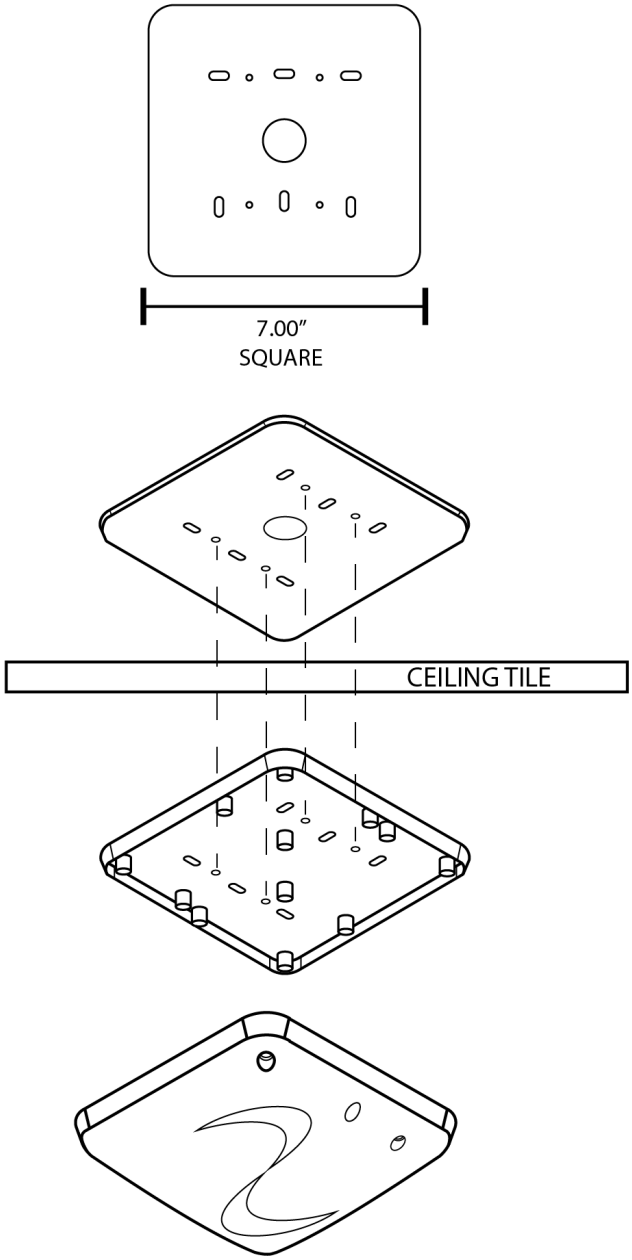

Figure 5.3 - Mounting Plate

Removing the Cover

To remove the cover from the Receiver, refer to figure 5.4 and use the following instructions:

1) Unscrew and set aside the four screws that fasten the cover of the Receiver.

2) Rest your thumbs on top of the Receiver antennas to stabilize, but DO NOT apply pressure to the antennas.

3) Pull down on the lip of the cover with your index fingers to slide the cover off the Receiver.

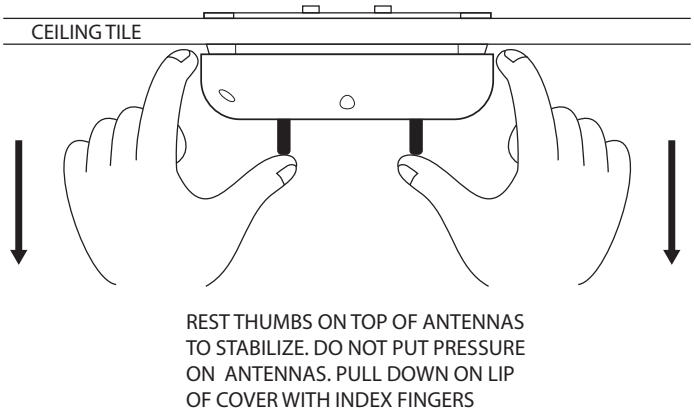

Figure 5.4 - Removing the Receiver Cover

Positioning

For a monitored door with a Controller, locate the Receiver, ideally, within approximately 15 feet of the LF Antenna.

The recommended location for the Receiver unit is on the ceiling, mounted to a drop-ceiling tile.

Wiring

Up to 9 Receivers, (3 buses of 3 Receivers each) can be wired to a single RXC Controller. Up to 6 Receivers, (2 buses of 3 Receivers each) can be wired to a single Door Controller. These connections are made via Cat5 cable.

Note: Use UL-approved, plenum-rated cable.

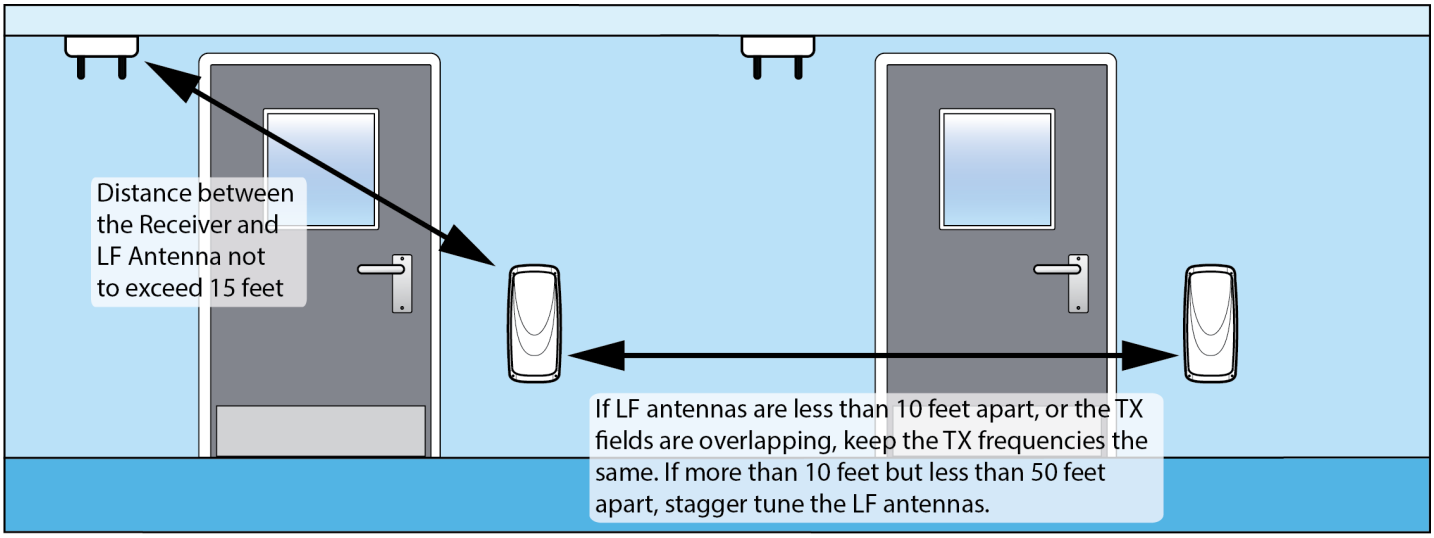

Figure 5.5 - Receiver Positioning

Note: Use one specific twisted pair for A and B.

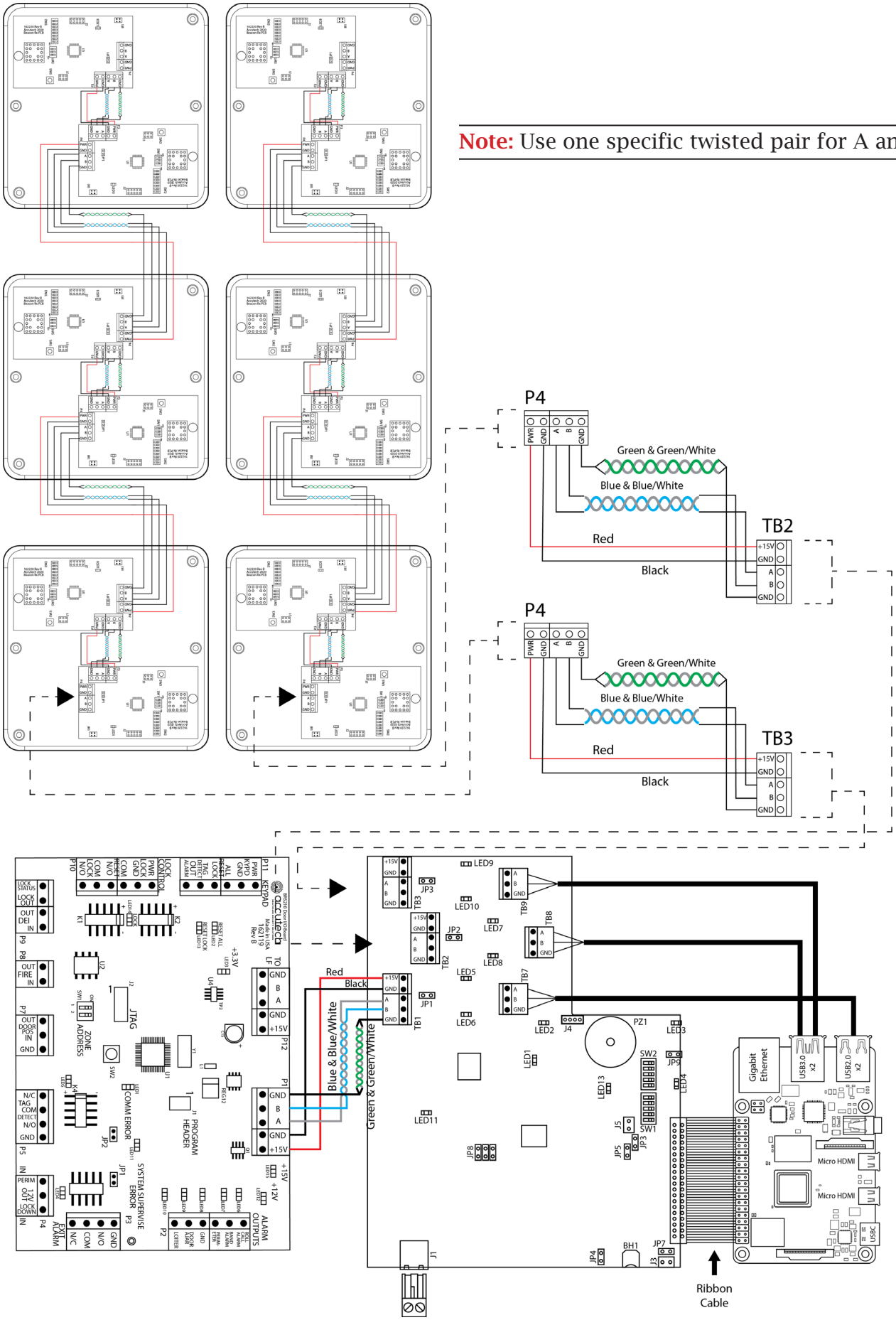

Figure 5.6 -Receiver Wiring to Door Controller