UNO Specifications

Version 1.9

Notice

This manual contains intellectual property including, but not limited to, trade secrets and know-how, operation procedures and production procedures that belong solely to oti.

Disclosure, use, and/or production of any part of the above are strictly forbidden, except under a written license from oti.

FCC Compliance

This device (Saturn 6700) complies with Part 15, of the FCC Rules.
Operation is subject to the following two conditions:

1. This device may not cause harmful interference,
   and
2. This device must accept any interference received, including interference that may cause undesired operation

NOTE:

This equipment has been tested and found to comply with the limits for a Class B digital device, pursuant to part 15, subpart C of the FCC Rules. These limits are designed to provide reasonable protection against harmful interference in a residential installation. This equipment generates, uses and can radiate radio frequency energy and, if not installed and used in accordance with the instructions, may cause harmful interference to radio communications.
However, there is no guarantee that interference will not occur in a particular installation. If this equipment does cause harmful interference to radio or television reception, which can be determined by turning the equipment off and on, the user is encouraged to try to correct the interference by one or more of the following measures:

- Reorient or relocate the receiving antenna.
- Increase the separation between the equipment and receiver.
- Connect the equipment into an outlet on a circuit different from that to which the receiver is connected.
- Consult the dealer or an experienced radio/TV technician for help.

Changes or modifications in this equipment, not expressly approved by the party responsible for compliance (On Track Innovations Ltd,) could void the user's authority to operate the equipment.

FCC ID: JNX-OTI-SAT6700

Responsible Party:

On Track Innovations LTD..
Z.H.R Industrial Zone.
Rosh Pina 12000
ISRAEL
Phone: +972-4-6868000
Email: Supportoti@otiglobal.com

Table of Contents

FCC COMPLIANCE **1**

TABLE OF CONTENTS **2**

TABLE OF FIGURES **3**

VERSIONS TABLE **4**

1 INTRODUCTION **5**

1.1 CERTIFIED AND SUPPORTED APPLICATIONS 6
1.2 SUPPORTED STANDARDS 7

2 BASIC CONTACTLESS OPERATION **8**

3 TECHNICAL SPECIFICATIONS **9**

3.1 PRODUCT FEATURES 9
3.2 PRODUCT TECHNICAL SPECIFICATIONS 10

4 READER MODELS **12**

4.1 RS232 MODEL 12
4.2 USB MODEL 12
4.3 INTERFACE CABLES 13
4.3.1 RS232 cable *13*
4.3.2 USB Cable *14*

5 DIMENSIONS **15**

5.1 FRONT VIEW 15
5.2 SIDE VIEW 16

6 UNO MOUNTING **17**

6.1 ON PANEL MOUNTING 18
6.2 FLUSH MOUNTING 20
6.3 COUNTERTOP (DESKTOP) MOUNTING 25

7 CONTACT US **26**

Table of Figures

Figure 2-1: Card Presentation 8

Figure 5-1: Front View....15

Figure 5-2: Side View 16

Figure 5-3: UNO Size Scale....16

Figure 6-1: Flush and On Panel Mounting....17

Figure 6-2: UNO Mounting Studs....18

Figure 6-3: UNO Panel Mounting view....19

Figure 6-4: UNO Panel Mounting Drilling Template 19

Figure 6-5: UNO Flush Mounting – Front View....20

Figure 6-6: UNO Flush Mounting – Side View 21

Figure 6-7: UNO Flush Mounting – Front View....21

Figure 6-8: UNO Flush Mounting – Side View....22

Figure 6-9: UNO Flush Mounting – Angular View....23

Figure 6-10: UNO Flush Mounting – Rear View....24

Figure 6-11: Uno Flash Mounting - Cutout....24

Figure 6-12: UNO Countertop (Desktop) Mounting – Front View 25

Versions Table

Version	Description	Date	Name
1.1	First version	2014-11-02	Moshe Cohen
1.2	• Supporting operation voltage of 8 - 45VDC instead of 2 - 15 VDC • Adding a note regarding "Behind Panel" mounting • Having only one thickness configuration (17mm thickness) instead of 17 or 25 mm	2014-11-10	Moshe Cohen
1.3	• Reader structural update • New connectors • Updates about the mounting options	2014-11-30	Moshe Cohen
1.4	• New pinout for the full interface connector • New pictures of the UNO prototype • Update contact information of the oti America support team	2015-01-13	Moshe Cohen
1.5	• New warning regarding power supply stability • New warning regarding mounting on metal • Replacing "flat" wording by "flush"	2015-07-14	Aharon Binur
1.51	Decrease the input voltage range to 40Vdc	2015-09-29	Aharon Binur
1.6	Add Recommended Cutout and Drilling for installation	2015-12-03	Aharon Binur
1.7	Adding notes to FCC compliance statement.	2016-04-14	Avner
1.8	Update total power sonsumption and IP rating	2016-05-10	Hemy
1.9	Add clear distinction between USB and RS232 models.	2016-05-16	Hemy

1 Introduction

The UNO is an ultra-compact, certified payment NFC Reader based on oti's field proven technology which is specifically designed for payment and mass transit applications. Its compact design enables easy integration and installation in unattended self-service payment stations, such as ATMs, AVMs, TVMs, gaming and gambling machines, kiosks, access control gates and more.

The UNO uses oti's patented matched antenna technology.

The UNO supports SAM house that allows the reader to access its own or external security elements such as Mifare Authentication SAM.

The UNO is designed to be seated on any counter as an attended reader or alternatively can be installed as part of an unattended vending or service machine.

UNO's plug-and-play design makes it easy to connect to any existing infrastructure and POS terminal, quickly upgrading it to contactless operations without disrupting ongoing business operations. In its USB configuration, the UNO is USB powered, this option contributes to the easy installation and maintenance of the reader.

1.1 Certified and Supported Applications

The UNO is certified and supports the following contactless applications:

- **EMV**
  - Contactless EMV L1
- **VISA**
  - VISA PayWave MSD
  - VISA PayWave qVSDC
  - NDOT over VISA for transportation
  - VISA Global Transit Payment Pilot Specification
  - VISA Pilot Visa PayWave Ticketing Extension Specification
  - VISA Asia Pacific WAVE 2
- **MasterCard**
  - MasterCard PayPass M/Chip (including Data Exchange)
  - MasterCard PayPass Mag Stripe
  - NDOT over MasterCard for transportation
- **American Express**
  - AMEX ExpressPay
- **Discover**
  - Discover ZipNetwork
- **Interac**
  - Interac Flash
- **SoftCard**
  - SoftCard (ISIS) SmartTap
- **Mifare**
  - Mifare Ultralight
  - Mifare Classic
  - Mifare DESFire (optional)
- **Transparent (Pass-Through) Communication**
  - ISO/IEC 14443 Type A - Transparent Proximity
  - ISO/IEC 14443 Type B - Transparent Proximity
  - ISO/IEC 15693 Vicinity (optional) - Transparent Vicinity
- **Other**
  - Additional proprietary applications

*In process of certification

1.2 Supported Standards

The UNO is compatible with the following standards:

- FCC
- CE
- UL
- RoHS compliance
- ISO 9001: 2008
- ISO/IEC 14443 Proximity Type A&B
- ISO/IEC 15693 Vicinity
- Mifare
- MasterCard TQM label
- IPX5

2 Basic Contactless Operation

When a valid contactless payment card is presented to the reader, the reader performs a payment transaction with the contactless card. If the transaction is accepted, the unit will display a row of 4 LEDs that light up in sequence and the reader buzzer will inform the user about the transaction verdict. The reader then communicates the transaction data to the Host (POS).

A landing zone logo, lighted by the reader, on the graphic overlay indicates where the contactless card or tag should be presented.
The interactive LEDs and Buzzer give the user an indication of the transaction status.

Figure 2-1: Card Presentation

3 Technical Specifications

3.1 Product Features

General

- Flexible, software configurable, certified intelligent reader solution
- oti advanced Host – Reader TLV based protocol
- Contactless transparent communication support
- Modular design by Hardware and Software
- Tamper-proof remote software update
- Available as OEM

RF Interface

- Bi-directional RF interface between Reader and Contactless Smart Cards
- Carrier frequency: 13.56 MHz
- ISO/IEC 14443 Type A/B and Mifare full support
- Optional I-Code and ISO/IEC 15693 support

Communication Links

- USB 2.0 – full speed, CDC, mini USB connector
- RS 232, 8 data bits, no parity, 1 stop bit, full 8-bit binary data. Client defined baud rate

Connectors:

Either a JST 10 pin ZPD interface, located in the back of the reader and contains a Power, RS232, USB and External buzzer lines.

Or a mini USB connector located at the back of the reader and supports USB only. In this configuration the reader is 5VDC USB powered.

User Interface

- 4 LED indicators
- Buzzer

Electronic Board Power Requirements

- 8VDC - 40VDC (Onboard Switch Mode Power Supply) or 5VDC via USB connector.

Max power consumption

- Less than 3W (RF signal on) with 8-40VDC supply.
- Less than 2.5W (RF signal on) with 5VDC supply from USB bus.

SAM Interface

- One micro SIM Slot

Security

- High security encryption system (3DES/AES/RSA) protects the reader's operating system
- Vandalism-proof PKI protected software update mechanism
- DUKPT (Derived Unique Key Per Transaction) support
- Offline PIN Authentication support
- Secure boot loader (firmware update) protocol

Environmental Conditions

- Operating: -20° to 70°C (-4° to 158°F)

3.2 Product Technical Specifications

The performance/electrical specifications for each feature of the UNO reader are given in the table below.

Table 3-1: Performance/Electrical Specifications

Feature	Specification
■ **RF Interface:**	
RF Carrier Frequency	13.56 MHz
RF Output	450mW
ISO/IEC 14443 A&B and Mifare	Full compliance
ISO/IEC 15693 Vicinity	Optional
■ **Micro SIM push-push Interface**	
■ **Communication Links:**	
USB, RS232	
■ **USB:**	
2.0 Full speed	CDC
■ **Connectors**	Standard mini-USB connector
USB only	Mini USB connector
Full interface	JST 10 pin P/N BM10B-ZPDSS
■ **Indicators:**	
LEDs	Four programmable on-board LEDs
Buzzer	Multi tone differential drive buzzer
■ **Electronic Board Power Requirements:**	
8VDC – 40VDC, Pmax<3W	On-board switching power supply
5VDC, Pmax<2.5W	From USB bus in USB only
■ **Mechanical:**	
Dimensions (See Figure 5-1: Front View and Figure 5-2: Side View)	H – 0.66” (17mm) W – 2.40” (61mm) D – 3.07” (78mm)
Weight	125 gr.
Vibrations	10 ÷ 200 Hz @ 2.0G
IP rating	IPX5
■ **Temperature:**	
Operating	-20°C to 70°C (-4°F to 158°F)

Warning: Power supply minimum requirements

Keeping the DC supply voltage within the specified allowed range is crucial to guarantee proper operation of the equipment. The use of AC rectified power supply source, which is not properly filtered, forms a risk of too low voltage dips and hence should be avoided. It is highly recommended to check this issue with proper tools (e.g. oscilloscope) during the reader installation. For more details contact ***oti*** *technical team via* ***oti****'s sales representatives.*

4 Reader models

4.1 RS232 model

The RS232 interface is implemented using a JST 10 pin connector (JST P/N BM10B-ZPDSS).

The connector exposes 10 lines according to the following:

1. RS223 Rx
2. RS232 Tx
3. USB D-
4. Buzser 1
5. USB D+
6. Buzzer 2
7. GND (direct)
8. Vin
9. 5V
10. GND Ext (via common mode chock)

Note: the 10 pin connector optionaly support USB communication and extranl buzzer activation. This option is not in OTI standard products portfolio.

4.2 USB model

A mini-USB connector on the back of the reader provides communication to the host terminal (POS). It can be used to provide either USB or RS232 serial interface depending on the reader's hardware configuration.

DC power to the unit can be provided either through the mini-USB connector or through the power jack which is part of the communication cable.

4.3 Interface cables

4.3.1 RS232 cable

A JST 10 pin connector (JST P/N BM10B-ZPDSS) is available to access the reader full interface.

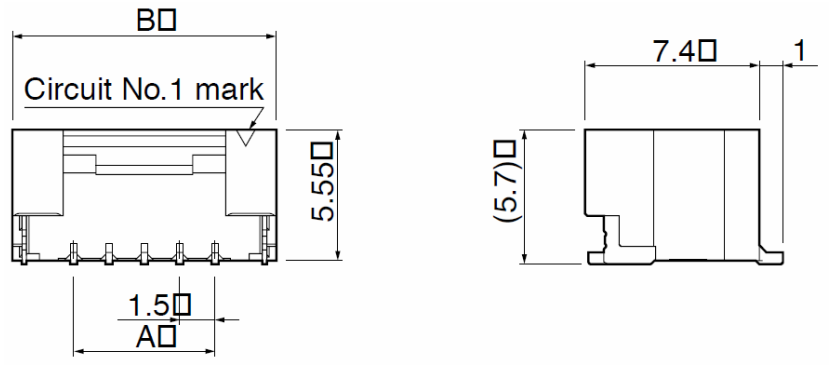

Figure 4-1: BM10B-ZPDSS Connector – Top Entry Type

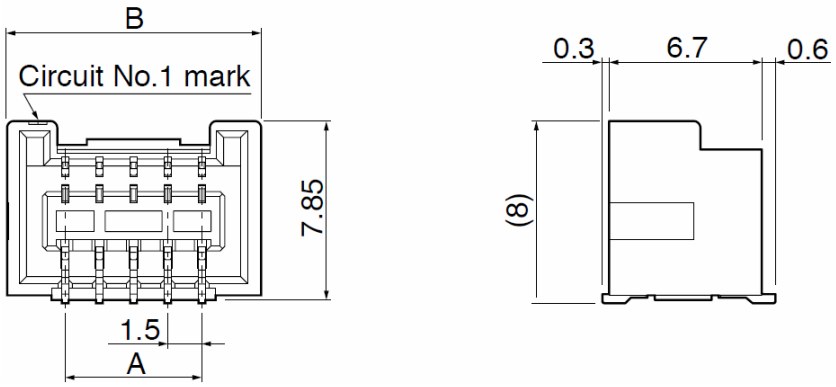

Figure 4-2: BM10B-ZPDSS Connector – Side Entry Type

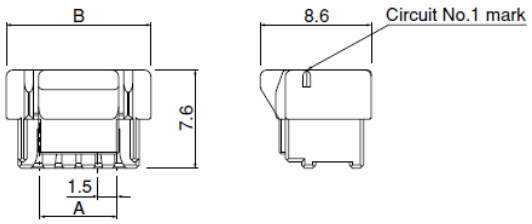

Figure 4-3: BM10B-ZPDSS Connector housing

4.3.2 USB Cable

The USB cable (1.8m) has a mini-USB upstream connector on the reader side and a USB downstream connector on the host side.

This cable can be in use while the reader is in USB only configuration.

In this hardware configuration, the reader is USB powered, no additional power supply is required.

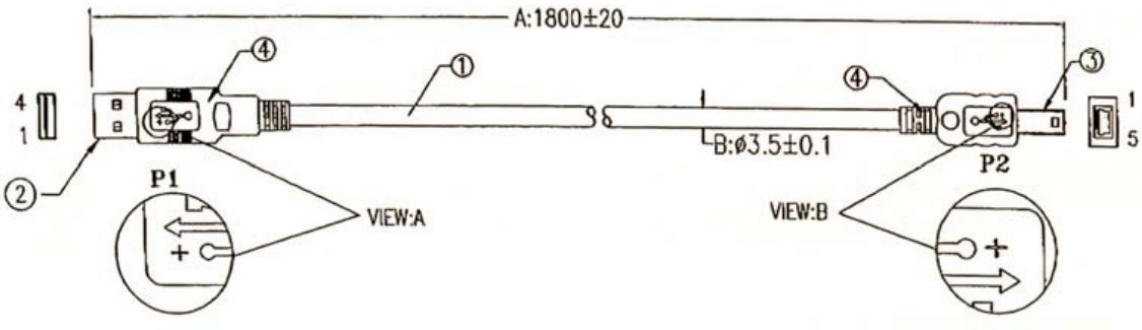

Figure 4-4: USB Cable

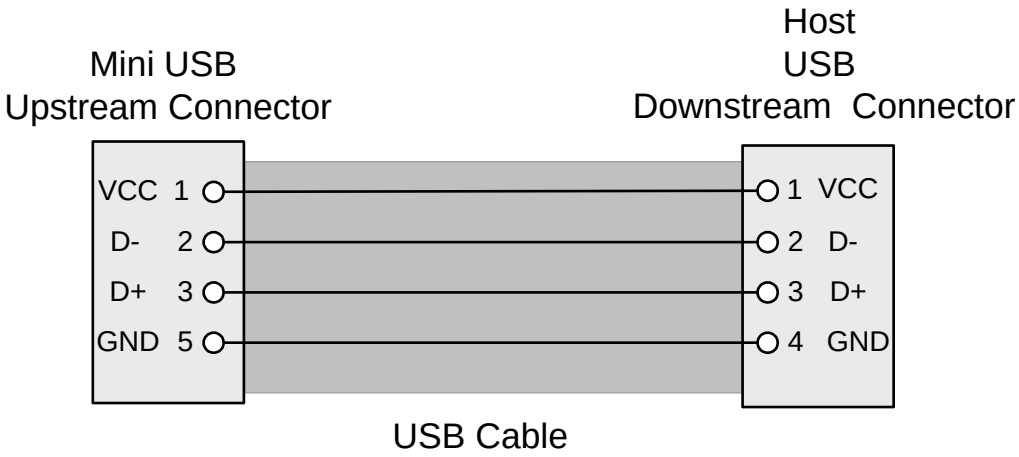

Figure 4-5: USB Connection

5 Dimensions

The reader's front and side view dimensions are given in this chapter.

5.1 Front View

The reader's front view is illustrated in the figure below.

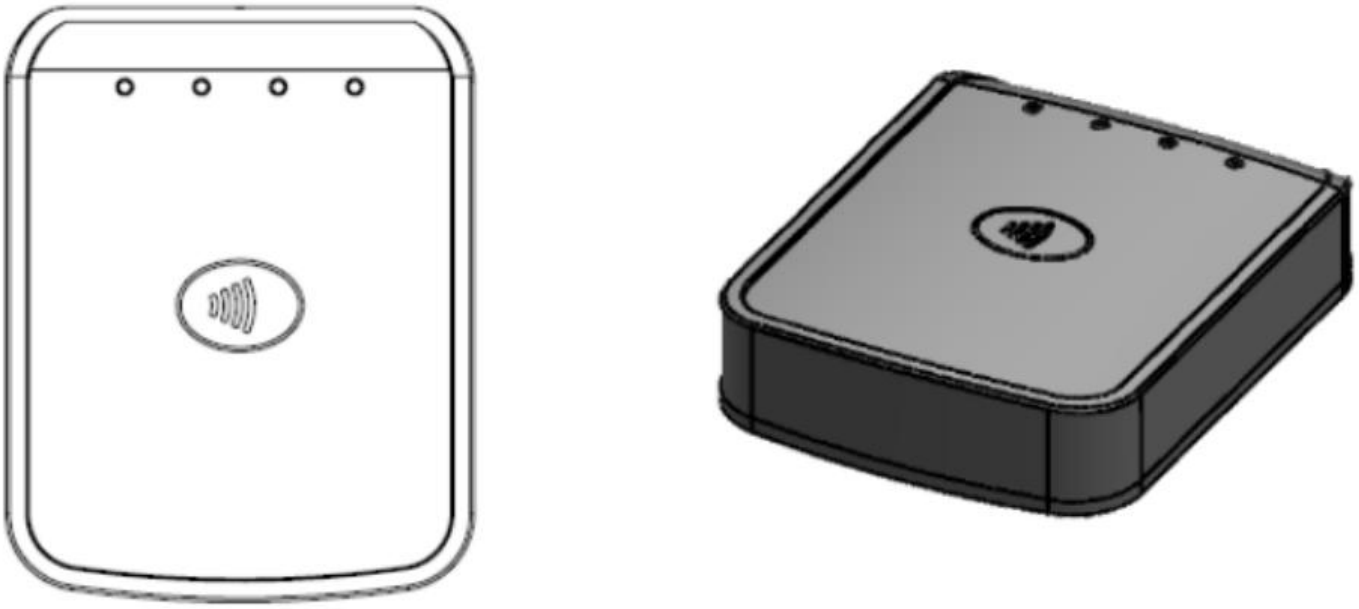

Figure 5-1: Front View

5.2 Side View

The reader's side view dimensions are illustrated in the figure below.

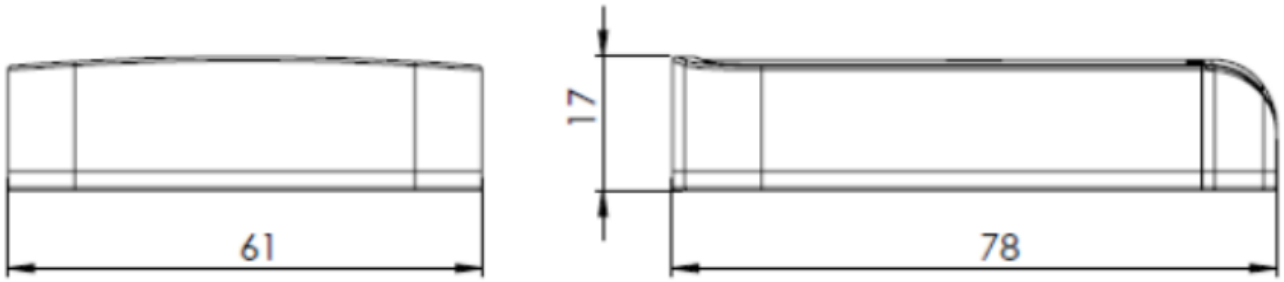

Figure 5-2: Side View

Figure 5-3: UNO Size Scale

6 UNO Mounting

While the UNO can be placed simply on the counter as a countertop reader connected to a terminal, the UNO can also be mounted as part of an unattended machine. This chapter specifies the mounting options and procedures.

The UNO mounting possibilities include 3 main options, as illustrated below:

1. On panel mounting
2. Flush mounting
3. Countertop (Desktop) mounting

The different mounting configuration allows to install the UNO on top of the machine surface, leveled with the machine surface or over the counter.

Figure 6-1: Flush and On Panel Mounting

Warning: Mounting on metal

Direct mounting of the reader on metallic/conductive panel requires special attention as it negatively affects the reader contactless performance. For more details contact ***oti*** *technical team via* ***oti****'s sales representatives.*

6.1 On Panel Mounting

The image below illustrates the UNO's on panel mounting option.

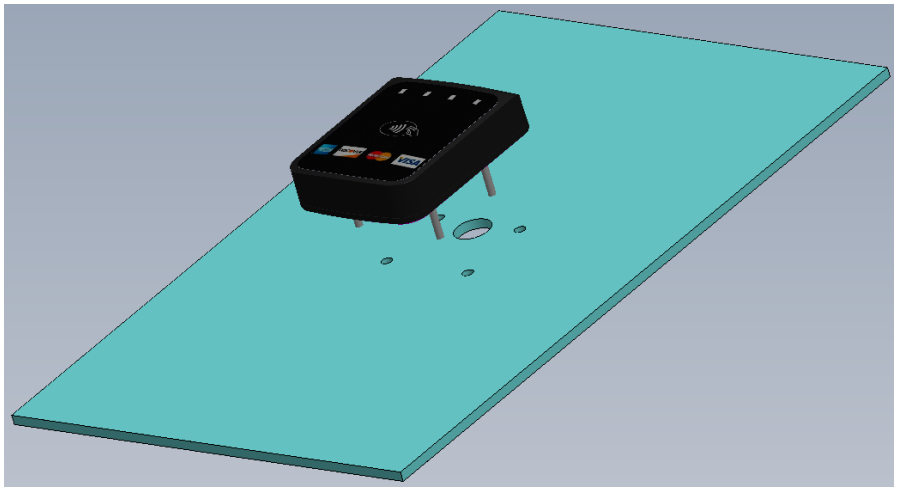

Figure 6-2: UNO Mounting Studs

1. The UNO is equipped with 4 mounting studs for front panel mounting.

2. The studs and cable are inserted through holes in the front panel. The nuts are fastened over the studs from the back of the front panel, protecting against potential attempts to dismantle the unit from the front.

3.

Figure 6-3: UNO Panel Mounting view

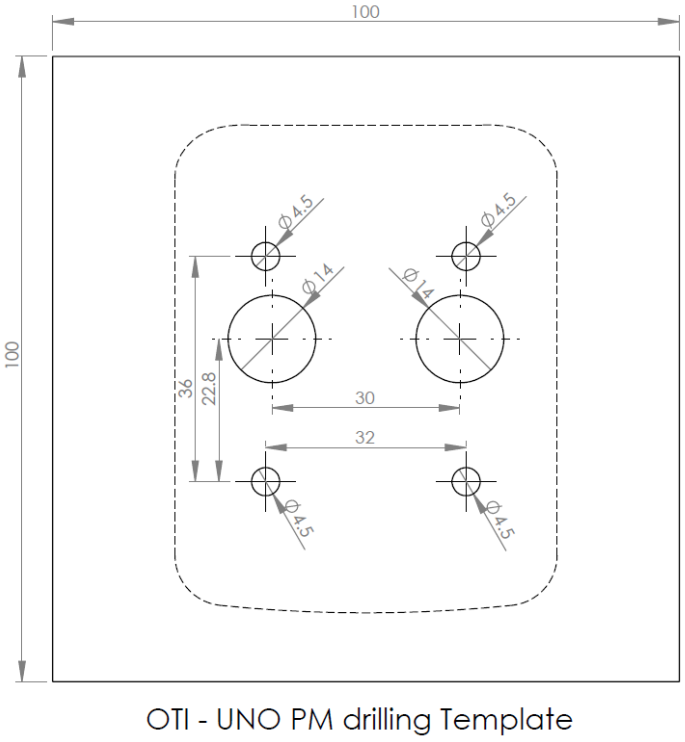

Figure 6-4: UNO Panel Mounting Drilling Template

6.2 Flush Mounting

The image below illustrates the UNO's flush mounting option.

Figure 6-5: UNO Flush Mounting – Front View

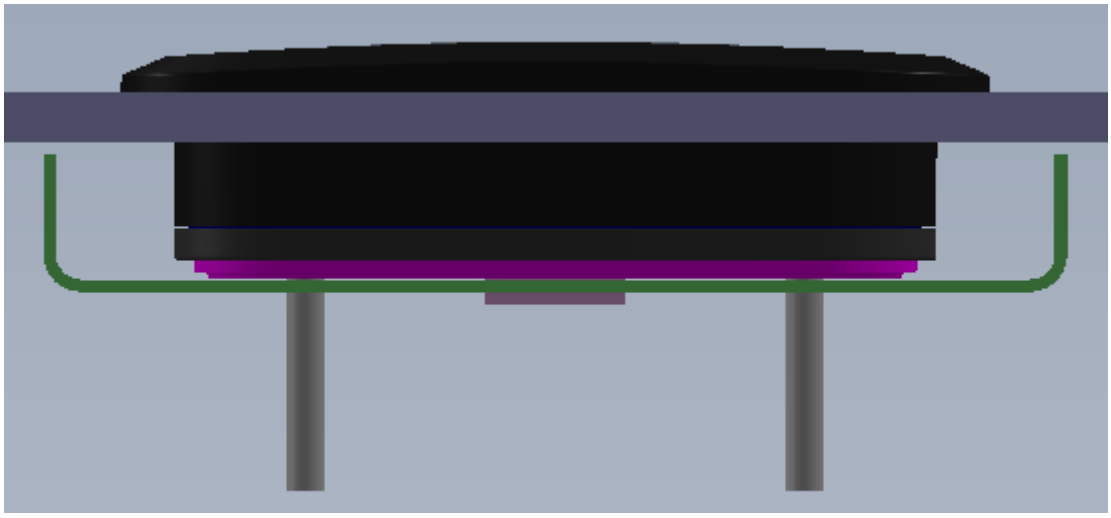

Figure 6-6: UNO Flush Mounting – Side View

1. The UNO can be mounted flush with the front panel surface.

2. The flush mounting option requires a 63x80 mm cutout in the center of the non-metallic section of the front panel.

3. A mounting holder (green) in the back of the reader is tighten the device to the panel. A gasket that is separated between the device cover and the panel keep it waterproof.

Figure 6-7: UNO Flush Mounting – Front View

Figure 6-8: UNO Flush Mounting – Side View

Figure 6-9: UNO Flush Mounting – Angular View

Figure 6-10: UNO Flush Mounting – Rear View

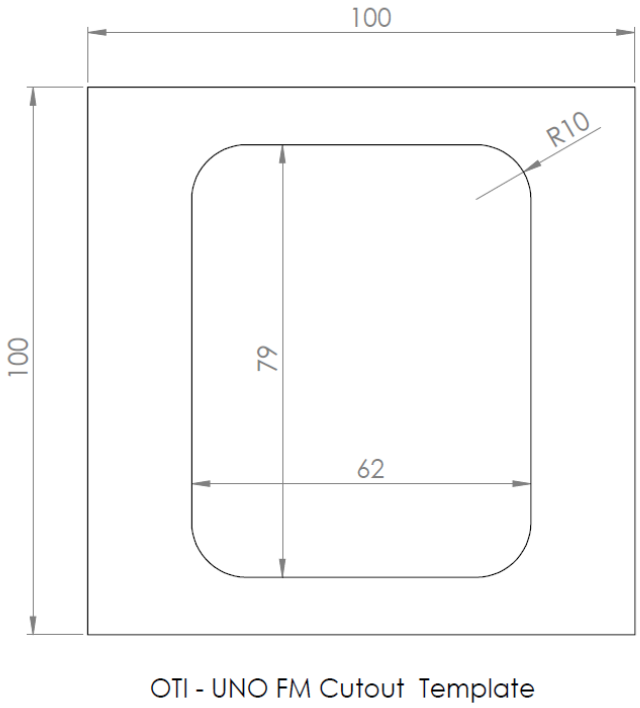

Figure 6-11: Uno Flash Mounting - Cutout

6.3 Countertop (Desktop) mounting

As the product software supports both attended and unattended usage profiles, the UNO can be used also as attended reader.

In order to use the UNO in its countertop configuration you should connect it to the POS using the full interface to via the USB interface and to place it over the counter or alternatively in its cradle (if available).

Figure 6-12: UNO Countertop (Desktop) Mounting – Front View

7 Contact Us

For oti America Technical Support (US and Canada**):**

- Phone: +1-732-429-1900 9:00 am to 5:00 pm Eastern time Monday – Friday
- Email: support@otiamerica.com

For oti Technical Support (International**):**

- Phone: +972-4-6868000 (Ext. 8090)
- Email: info@otiglobal.com