SATURN 8700 USB Specifications

Version 1.4f

Notice

This manual contains intellectual property including, but not limited to, trade secrets and know-how, operation procedures and production procedures that belong solely to oti.

Disclosure, use, and/or production of any part of the above are strictly forbidden, except under a written license from oti.

FCC Compliance

This device (Saturn 8700) complies with Part 15, of the FCC Rules and with Industry Canada's licence-exempt RSSs.

Operation is subject to the following two conditions:

1. This device may not cause harmful interference, and
2. This device must accept any interference received, including interference that may cause undesired operation

Le présent appareil est conforme aux CNR d'Industrie Canada applicables aux appareils radio exempts de licence. L'exploitation est autorisée aux deux conditions suivantes :

1. l'appareil ne doit pas produire de brouillage;
2. l'utilisateur de l'appareil doit accepter tout brouillage radioélectrique subi, même si le brouillage est susceptible d'en compromettre le fonctionnement.

NOTE:
This equipment has been tested and found to comply with the limits for a Class B digital device, pursuant to part 15, subpart C of the FCC Rules. These limits are designed to provide reasonable protection against harmful interference in a residential installation. This equipment generates, uses and can radiate radio frequency energy and, if not installed and used in accordance with the instructions, may cause harmful interference to radio communications.
However, there is no guarantee that interference will not occur in a particular installation. If this equipment does cause harmful interference to radio or television reception, which can be determined by turning the equipment off and on, the user is encouraged to try to correct the interference by one or more of the following measures:

- Reorient or relocate the receiving antenna.
- Increase the separation between the equipment and receiver.
- Connect the equipment into an outlet on a circuit different from that to which the receiver is connected.
- Consult the dealer or an experienced radio/TV technician for help.

Changes or modifications in this equipment, not expressly approved by the party responsible for compliance (On Track Innovations Ltd,) could void the user's authority to operate the equipment.

This Class B digital apparatus complies with Canadian ICES-003.
Cet appareil numerique de la classe B est conforme a la norme NMB-003 du Canada.

Certificates identifiers:

FCC ID: JNX-OTI-SAT8700P

IC:10533A-OTISAT8700

Responsible Party:

On Track Innovations LTD..
Z.H.R Industrial Zone.
Rosh Pina 12000
ISRAEL
Phone: +972-4-6868000
Email: Supportoti@otiglobal.com

Table of Contents

FCC COMPLIANCE **1**

TABLE OF CONTENTS **1**

TABLE OF FIGURES **4**

REVISION HISTORY **5**

1 INTRODUCTION **6**

1.1 SUPPORTED APPLICATIONS 7
1.2 SUPPORTED STANDARDS 8

2 TECHNICAL SPECIFICATIONS **9**

2.1 PRODUCT FEATURES 9
2.2 PRODUCT TECHNICAL SPECIFICATIONS 10

3 READER MODELS **12**

3.1 RS232 MODEL 12
3.2 USB MODEL 12
3.3 INTERFACE CABLES 13
3.3.1 RS232 cable *13*
3.3.2 USB Cable *14*

4 DIMENSIONS **15**

4.1 ON PANEL DIMENSIONS 15
4.2 FLUSH MOUNT DIMENSIONS 16

5 SATURN 8700 USB MOUNTING **18**

5.1 ON PANEL MOUNTING 19
5.2 FLUSH MOUNTING 21

6 CONTACT US **24**

Table of Figures

Figure 1-1: SATURN 8700 USB 6

Figure 4-1: On Panel dimensions 15

Figure 4-2:: Flush mount dimensions.....16

Figure 4-3: SATURN 8700 USB Size Scale.....17

Figure 5-2: SATURN 8700 USB Mounting Studs.....19

Figure 5-3: SATURN 8700 USBPanel Mounting view 20

Figure 5-4: SATURN 8700 USB Panel Mounting Drilling Template 20

Figure 5-5: SATURN 8700 USB Flush Mount.....21

Figure 5-6: SATURN 8700 USB Flush Mounting – Top View.....21

Figure 5-7: SATURN 8700 USB Flush Mounting – Side View 22

Figure 5-8: SATURN 8700 USB Flush Mounting – Rear View.....23

Figure 5-9: SATURN 8700 USB Flash Mounting - Cutout.....23

Revision history

Version	Description	Date
1.1	First version	28-Jun-2016
1.2	Updated photos, dimensions and technical specifications	10-Jul-2016
1.3	Updated product photos and Supported application logos	17-Jan-2017
1.4	Added reference for Bluetooth (optional), spelling and type errors fixes	18-Jan-2017
1.4F	Updated FCC declaration	11-Dec-2017

1 Introduction

The SATURN 8700 USB is an ultra-compact, certified payment NFC Reader based on oti's field proven technology which is specifically designed for unattended payment and mass transit applications.

Its compact design enables easy integration and installation in unattended self-service payment stations, such as ATMs, AVMs, TVMs, gaming and gambling machines, kiosks, access control gates and more.

SATURN 8700 USB's plug-and-play design makes it easy to connect to any existing infrastructure and POS terminal, quickly upgrading it to contactless operations without disrupting ongoing business operations.

Figure 1-1: SATURN 8700 USB

1.1 Supported Applications

The SATURN 8700 USB is certified and supports the following contactless applications:

- **EMVCo**
  - Book A – Modular architecture
  - Book B – Entry Point
  - Book C kernel 2 - MasterCard
  - Book C kernel 3 – Visa
  - Book D – L1 certified
- **Apple Pay**
- **Android Pay**
- **Felica**
  - M-Class device certified
- **Technologies**
  - ISO/IEC 14443 Type A
  - ISO/IEC 14443 Type B
  - ISO/IEC 15693 Vicinity
  - Felica JIS: X6319-4
  - ISO 18092 Active P2P
  - Mifare Ultralight
  - Mifare Classic
  - Mifare DESFire

1.2 Supported Standards

The SATURN 8700 USB is compatible with the following standards:

- FCC
- CE
- UL
- RoHS compliance
- ISO 9001: 2008
- ISO/IEC 18092
- ISO/IEC 14443 Type A&B
- ISO/IEC 15693
- Mifare
- Bluetooth
- IPX5

2 Technical Specifications

2.1 Product Features

General

- Flexible, software configurable, certified intelligent reader solution
- oti advanced Host – Reader TLV based protocol
- Contactless transparent communication support
- Modular design by Hardware and Software
- Secured remote software update

RF Interface

- Bi-directional RF interface between Reader and Contactless devices
- Carrier frequency: 13.56 MHz
- Data rate: Up to 848Kbs
- Bluetooth v4.1 BLE (optional)

Communication Links

- USB 2.0 – full speed, HID, MSD
- RS 232 / RS485 / TTL , 8 data bits, no parity, 1 stop bit, Client defined baud rate

Connectors:

JST ZPD 10 pin

Mini USB

User Interface

- Push Button: x2
- Payment indication LEDs: Green x4
- Contactless logo: RGB
- Audio: Speaker
- IN/OUT Signals (optional):
    - Audio OUT
    - Digital IN
    - Digital OUT

Power Requirements

- 8VDC - 40VDC (Onboard Switch Mode Power Supply) or 5VDC via USB connector

Max power consumption

- 2.5W @ 5VDC

SAM Interface

- Two micro SIM Slots

Security

- Cryptographic algorithms - 3DES, AES, RSA
- DUKPT (Derived Unique Key Per Transaction)
- Secure boot loader

2.2 Product Technical Specifications

The performance/electrical specifications for each feature of the SATURN 8700 USB reader are given in the table below.

Table 2-1: Performance/Electrical Specifications

Feature	Specification
■ **RF Interface:**	
RF Carrier Frequency	13.56 MHz
RF Output	450mW (@50ohm load)
■ **Bluetooth**	Bluetooth Low Energy (BLE) v4.1
■ **Micro SIM Interface**	
■ **Communication Links:**	
USB, RS232 / RS485 / TTL 8N1, configurable baud rate	
■ **USB:**	
2.0 Full speed	Composite HID, MSD
■ **Connectors**	
USB	Mini USB connector
Full interface	JST 10 pin P/N BM10B-ZPDSS
■ **Indicators:**	
Monochrome LED	Four programmable on-board LEDs
RGB LED	Contactless logo illumination
Audio	Speaker
■ **Electronic Board Power Requirements:**	
8VDC – 40VDC, Pmax<3W	On-board switching power supply
5VDC, Pmax<2.5W	From USB bus in USB only
■ **Mechanical:**	
Dimensions (On panel / Flush) (See Figure 4-1 and Figure 4-2)	H – 78.6 / 85.4 mm W – 61.0 / 67.8 mm D – 21.3 / 21.3 mm
Weight	125 gr.
■ **Temperature:**	
Operating	-20°C to 70°C (-4°F to 158°F)
■ **Environment:**	
IP rating	IPX5
Vibrations	10 ÷ 200 Hz @ 2.0G
Static pressure	Front panel: >50N/cm^2 Side panels: >100N/cm^2

Warning: Power supply minimum requirements

Keeping the DC supply voltage within the specified allowed range is crucial to guarantee proper operation of the equipment. The use of AC rectified power supply source, which is not properly filtered, forms a risk of too low voltage dips and hence should be avoided. It is highly recommended to check this issue with proper tools (e.g. oscilloscope) during the reader installation. For more details contact **oti** technical team via **oti**'s sales representatives.

3 Reader models

3.1 RS232 model

The RS232 interface is implemented using a JST 10 pin connector (JST P/N BM10B-ZPDSS).

Connector pin designation:

1. RS232 Rx
2. RS232 Tx
3. USB D-*
4. Audio OUT (Optional, pre-Amp)*
5. USB D+*
6. Digital OUT OC (Optional)*
7. GND (direct)
8. Vin
9. 5V*
10. GND Ext (via common mode choke)

*** Optional configurations**.

3.2 USB model

The USB model has a mini-USB connector on the back in the panel mount options or at the bottom of the reader in the desk top models. The USB connector provides communication and power to the reader.

3.3 Interface cables

3.3.1 RS232 cable

A JST 10 pin connector (JST P/N BM10B-ZPDSS) is available to access the reader full interface.

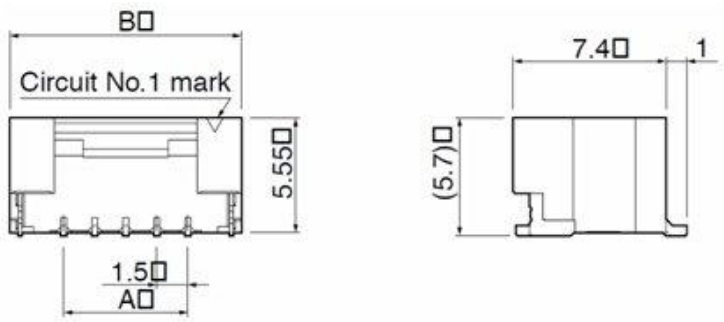

Figure 3-1: BM10B-ZPDSS Connector – Top Entry Type

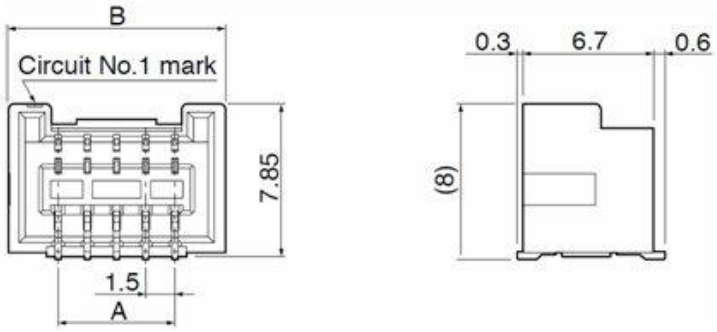

Figure 3-2: BM10B-ZPDSS Connector – Side Entry Type

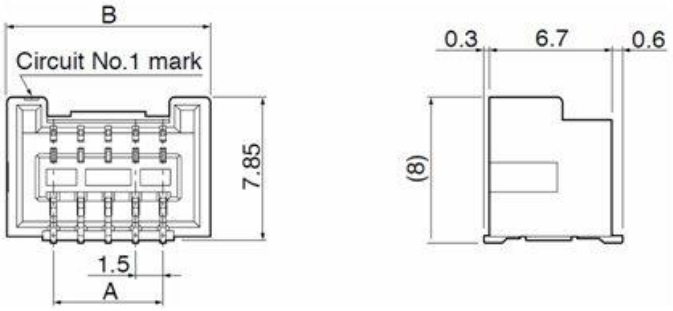

Figure 3-3: BM10B-ZPDSS Connector housing

3.3.2 USB Cable

The USB cable (1.8m) has a mini-USB upstream connector on the reader side and a USB downstream connector on the host side.

In this hardware configuration, the reader is USB powered; no additional power supply is required.

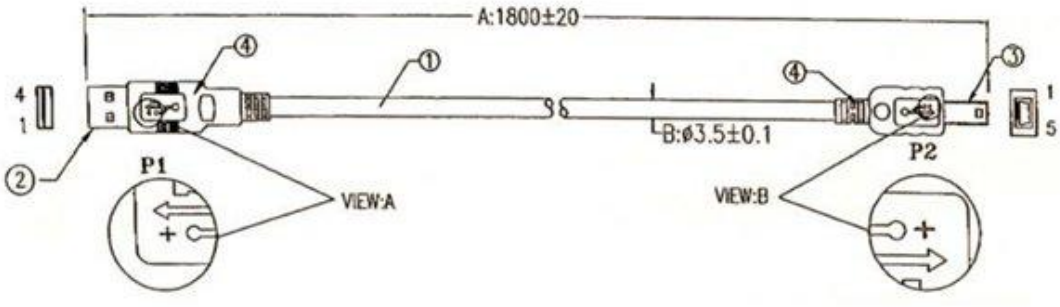

Figure 3-4: USB Cable

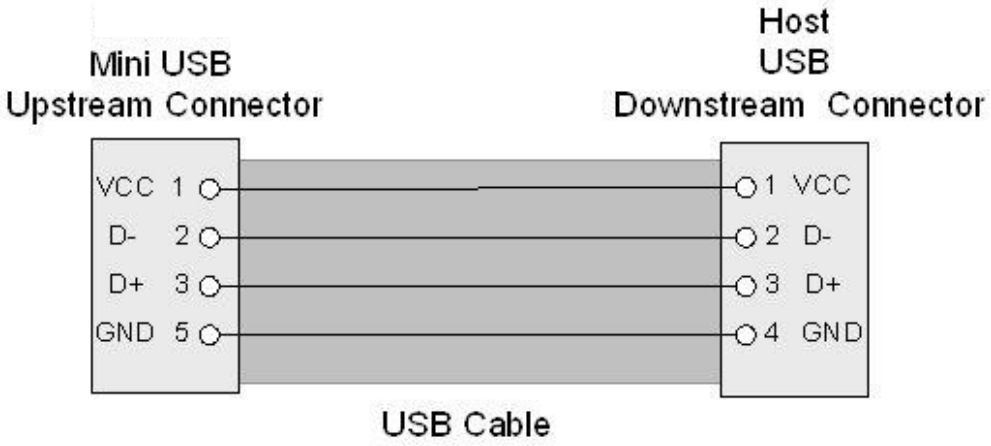

Figure 3-5: USB Connection

4 Dimensions

The reader's front and side view dimensions are given in this chapter.

All the dimensions are in millimeters.

4.1 On Panel dimensions

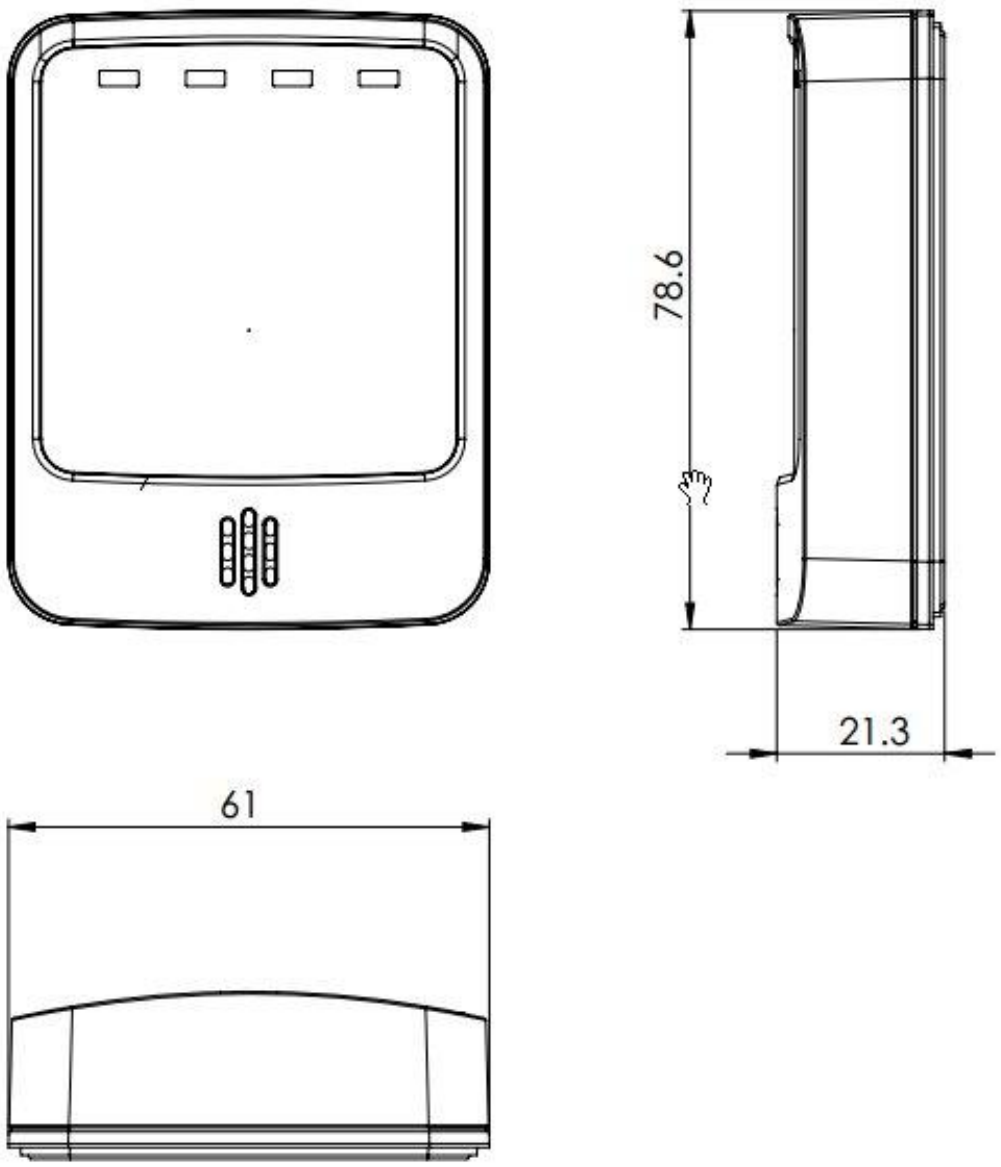

Figure 4-1: On Panel dimensions

4.2 Flush mount dimensions

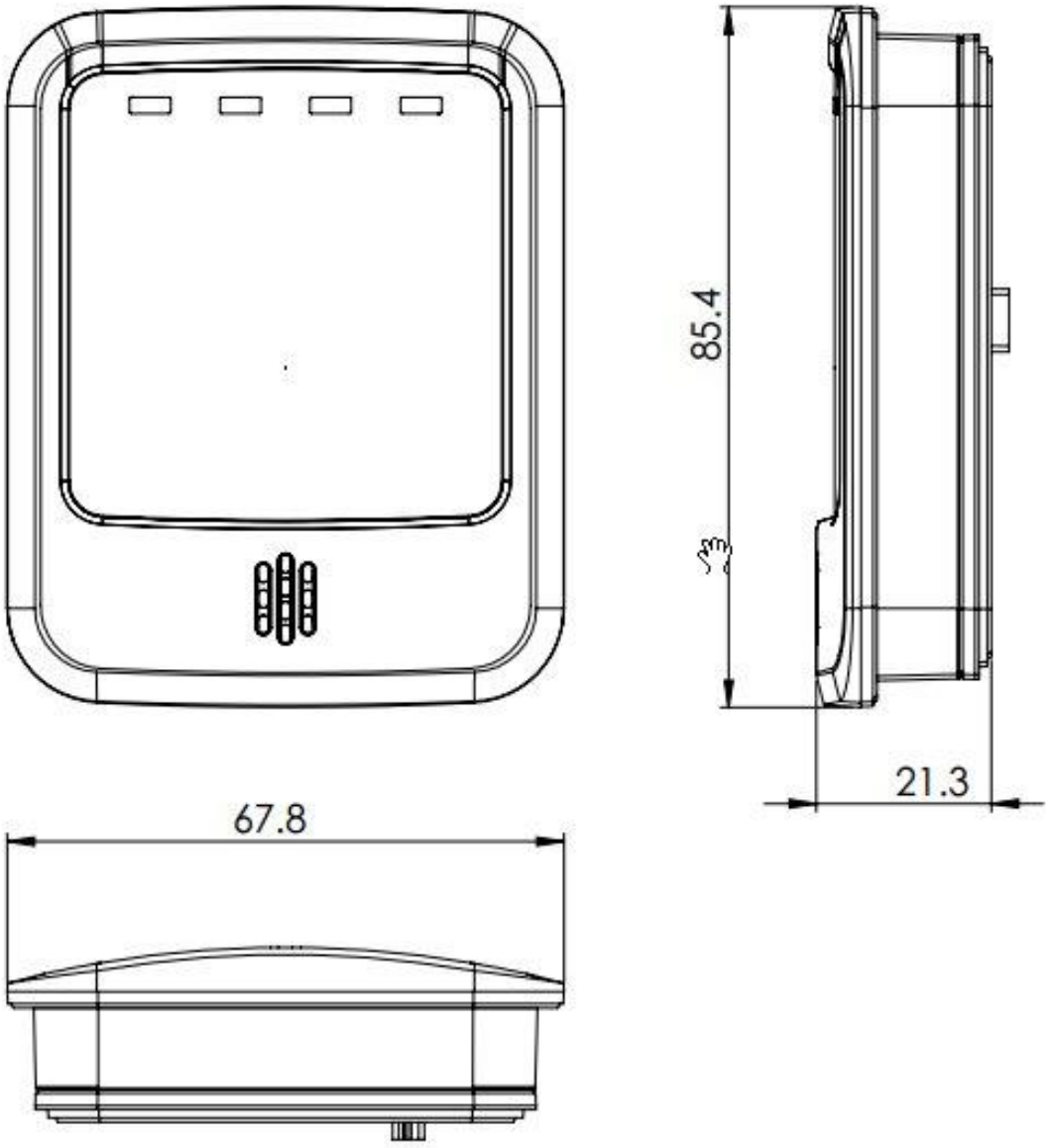

Figure 4-2: **Flush mount dimensions**

Figure 4-3: SATURN 8700 USB Size Scale

5 SATURN 8700 USB Mounting

SATURN 8700 USB support two mounting options: On panel and Flush

Figure 5-1: Flush and On Panel Mounting

Warning: Mounting on metal

Direct mounting of the reader on metallic/conductive panel requires special attention as it negatively affects the reader contactless performance. For more details contact **oti** technical team via **oti**'s sales representatives.

5.1 On Panel Mounting

The image below illustrates the SATURN 8700's on panel mounting option.

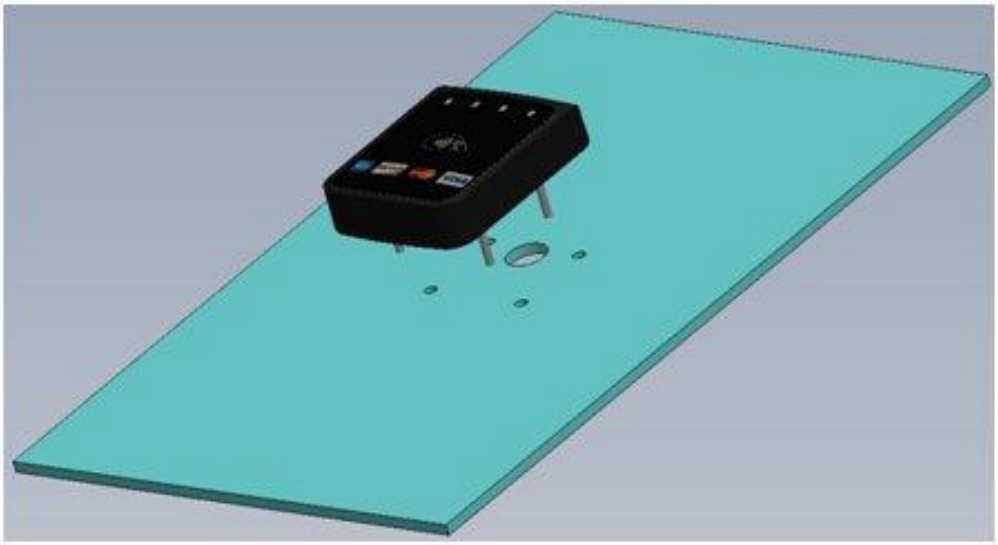

Figure 5-2: SATURN 8700 USB Mounting Studs

1. The SATURN 8700 USB is equipped with 4 mounting studs for front panel mounting.

2. The studs and cable are inserted through holes in the front panel. The nuts are fastened over the studs from the back of the front panel, protecting against potential attempts to dismantle the unit from the front.

Figure 5-3: SATURN 8700 USB - Panel mounting view

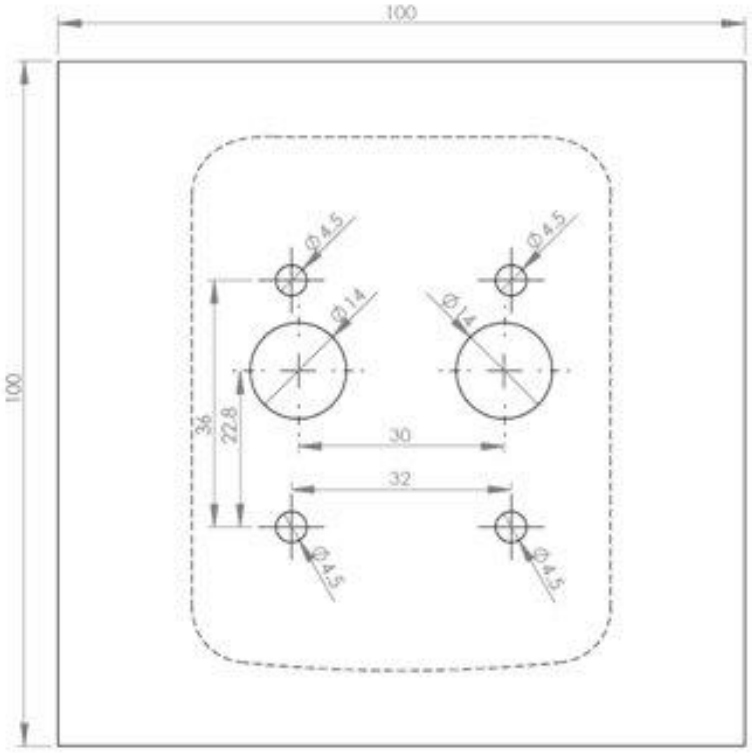

Figure 5-4: SATURN 8700 USB - Panel Mounting Drilling Template

5.2 Flush Mounting

The image below illustrates the SATURN 8700's flush mounting option.

Figure 5-5: SATURN 8700 USB - Flush Mount

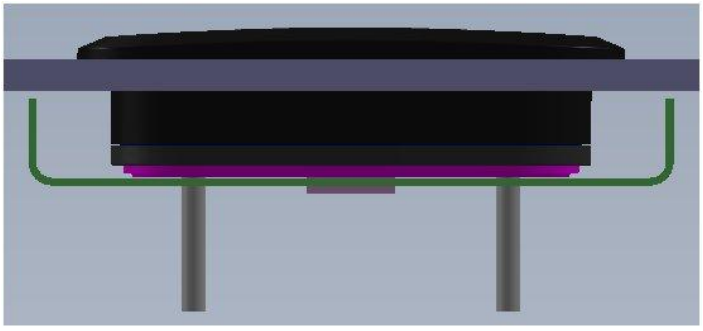

Figure 5-6: SATURN 8700 USB Flush Mounting – Top View

1. The SATURN 8700 USB can be mounted flush with the front panel surface.

2. The flush mounting option requires a 63x80 mm cutout in the center of the non-metallic section of the front panel.

3. A mounting holder (green) in the back of the reader is tightening the device to the panel. A gasket that is separated between the device cover and the panel keep it waterproof.

Figure 5-7: SATURN 8700 USB Flush Mounting – Side View

Figure 5-8: SATURN 8700 USB Flush Mounting – Rear View

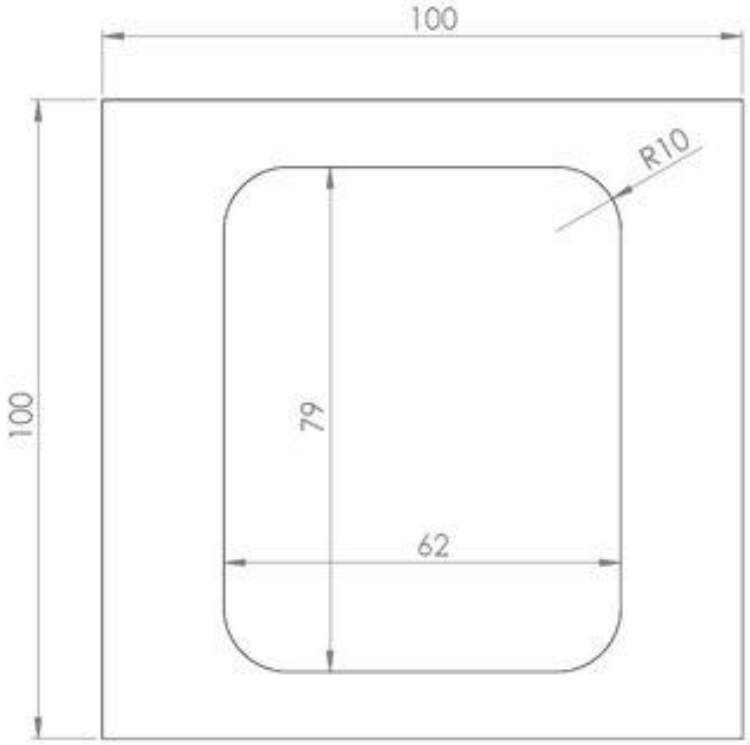

Figure 5-9: **SATURN 8700 USB Flash Mounting - Cutout**

6 Contact Us

For oti America Technical Support (US and Canada**):**

- Phone: +1-732-429-1900 9:00 am to 5:00 pm Eastern time Monday – Friday
- Email: support@otiamerica.com

For oti Technical Support (International**):**

- Phone: +972-4-6868000 (Ext. 8090)
- Email: info@otiglobal.com