FCC Test Report

Report No.: FC171110E06

Test Model: M-R0071

Received Date: Nov. 10, 2017

Test Date: Nov. 15, 2017

Issued Date: Jan. 17, 2018

Applicant: LOGITECH FAR EAST LTD.

Address: #2 Creation Rd. 4, Science-Based Ind. Park Hsinchu Taiwan, R.O.C.

Issued By: Bureau Veritas Consumer Products Services (H.K.) Ltd., Taoyuan Branch Hsin Chu Laboratory

Lab Address: E-2, No.1, Li Hsin 1st Road, Hsinchu Science Park, Hsinchu City 300, Taiwan R.O.C.

Test Location (1): E-2, No.1, Li Hsin 1st Road, Hsinchu Science Park, Hsinchu City 300, Taiwan R.O.C.

Test Location (2): No. 49, Ln. 206, Wende Rd., Shangshan Tsuen, Chiung Lin Hsiang, Hsin Chu Hsien 307, Taiwan R.O.C.

FCC Registration / Designation Number: 810758 / TW1085 for Test Location (1)
960022 / TW1058 for Test Location (2)

This report is for your exclusive use. Any copying or replication of this report to or for any other person or entity, or use of our name or trademark, is permitted only with our prior written permission. This report sets forth our findings solely with respect to the test samples identified herein. The results set forth in this report are not indicative or representative of the quality or characteristics of the lot from which a test sample was taken or any similar or identical product unless specifically and expressly noted. Our report includes all of the tests requested by you and the results thereof based upon the information that you provided to us. You have 60 days from date of issuance of this report to notify us of any material error or omission caused by our negligence, provided, however, that such notice shall be in writing and shall specifically address the issue you wish to raise. A failure to raise such issue within the prescribed time shall constitute your unqualified acceptance of the completeness of this report, the tests conducted and the correctness of the report contents. Unless specific mention, the uncertainty of measurement has been explicitly taken into account to declare the compliance or non-compliance to the specification..
The report must not be used by the client to claim product certification, approval, or endorsement by TAF or any government agencies.

Table of Contents

Release Control Record **3**

1 Certificate of Conformity **4**

2 Summary of Test Results **5**

2.1 Measurement Uncertainty 5
2.2 Modification Record 5

3 General Information **6**

3.1 Features of EUT 6
3.2 General Description of EUT 6
3.3 Operating Modes of EUT and Determination of Worst Case Operating Mode 7
3.4 Test Program Used and Operation Descriptions 7
3.5 Primary Clock Frequencies of Internal Source 7

4 Configuration and Connections with EUT **8**

4.1 Connection Diagram of EUT and Peripheral Devices 8
4.2 Configuration of Peripheral Devices and Cable Connections 9

5 Radiated Emissions up to 1 GHz **10**

5.1 Limits 10
5.2 Test Instruments 11
5.3 Test Arrangement 12
5.4 Supplementary Information 12
5.5 Test Results 13

6 Radiated Emissions above 1 GHz **15**

6.1 Limits 15
6.2 Test Instruments 16
6.3 Test Arrangement 17
6.4 Supplementary Information 17
6.5 Test Results 18

7 Pictures of Test Arrangements **20**

Appendix – Information on the Testing Laboratories **21**

Release Control Record

Issue No.	Description	Date Issued
FC171110E06	Original release.	Jan. 17, 2018

1 Certificate of Conformity

Product: 2.4GHz Cordless Mouse

Brand: logitech G

Test Model: M-R0071

Sample Status: ENGINEERING SAMPLE

Applicant: LOGITECH FAR EAST LTD.

Test Date: Nov. 15, 2017

Standards: 47 CFR FCC Part 15, Subpart B, Class B
ICES-003:2016 Issue 6, Class B
ANSI C63.4:2014

The above equipment has been tested by **Bureau Veritas Consumer Products Services (H.K.) Ltd., Taoyuan Branch**, and found compliance with the requirement of the above standards. The test record, data evaluation & Equipment Under Test (EUT) configurations represented herein are true and accurate accounts of the measurements of the sample's EMC characteristics under the conditions specified in this report.

Prepared by : Mary Ko , **Date:** Jan. 17, 2018
Mary Ko / Specialist

Approved by : , **Date:** Jan. 17, 2018
Ken Lu / Manager

2 Summary of Test Results

47 CFR FCC Part 15, Subpart B , Class B/ ICES-003:2016 Issue 6, Class ANSI C63.4:2014				
FCC Clause	ICES-003 Clause	Test Item	Result/Remarks	Verdict
15.107	6.1	AC Power Line Conducted Emissions	Not applicable, because the port is absent in the EUT	N/A
15.109	6.2.1	Radiated Emissions up to 1 GHz	Minimum passing Class B margin is -4.47 dB at 30.65 MHz	Pass
	6.2.2	Radiated Emissions above 1 GHz	Minimum passing Class B margin is -10.86 dB at 11060.00 MHz	Pass

Note: There is no deviation to the applied test methods and requirements covered by the scope of this report.

2.1 Measurement Uncertainty

Where relevant, the following measurement uncertainty levels have been estimated for tests performed on the EUT:

The listed uncertainties are the worst case uncertainty for the entire range of measurement. Please note that the uncertainty values are provided for informational purposes only and are not used in determining the PASS/FAIL results.

Measurement	Frequency	Expanded Uncertainty (k=2) (±)
Radiated Emissions up to 1 GHz	30MHz ~ 1GHz	3.91 dB
Radiated Emissions above 1 GHz	1GHz ~ 6GHz	4.73 dB
	6GHz ~ 18GHz	5.24 dB

2.2 Modification Record

There were no modifications required for compliance.

3 General Information

3.1 Features of EUT

The tests reported herein were performed according to the method specified by LOGITECH FAR EAST LTD. for detailed feature description, please refer to the manufacturer's specifications or user's manual.

3.2 General Description of EUT

Product	2.4GHz Cordless Mouse
Brand	logitech G
Test Model	M-R0071
Status of EUT	ENGINEERING SAMPLE
Power Supply Rating	DC 1.5V from battery
Antenna Type	Refer to Note
Antenna Connector	Refer to Note
Accessory Device	NA
Data Cable Supplied	NA

Note:

1. The EUT may have a lot of colors for marketing requirement.
2. The antennas provided to the EUT, please refer to the following table:

Antenna Gain (dBi)	Frequency range(GHz)	Antenna Type	Connecter Type
1.03	2.4~2.4835	Ceramic chip antenna	None

3. The above EUT information is declared by manufacturer and for more detailed features description, please refer to the manufacturer's specifications or user's manual.

3.3 Operating Modes of EUT and Determination of Worst Case Operating Mode

Test mode is presented in the report as below.

Mode	Test Condition
1	Normal Mode

3.4 Test Program Used and Operation Descriptions

1. Turn on the power of all equipment.
2. Set the EUT under typical use condition.
3. Support unit A (PC) runs” EMC test.exe” then sends "H" messages to support unit C (Monitor).

3.5 Primary Clock Frequencies of Internal Source

The EUT is provided by LOGITECH FAR EAST LTD., for detailed internal source, please refer to the manufacturer's specifications.

4 Configuration and Connections with EUT

4.1 Connection Diagram of EUT and Peripheral Devices

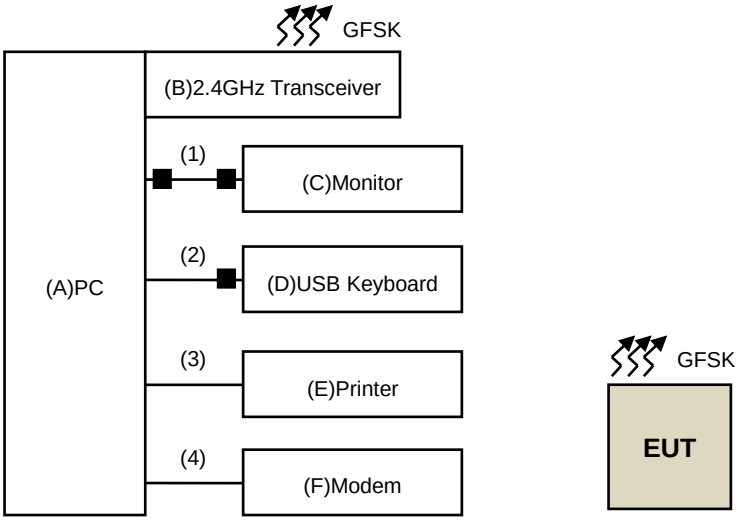

4.2 Configuration of Peripheral Devices and Cable Connections

ID	Product	Brand	Model No.	Serial No.	FCC ID	Remarks
A	PC	DELL	990X	NA	NA	Supplied by client
B	2.4GHz Transceiver	Logitech	C-U0008	NA	JNZCU0008	Supplied by client
C	Monitor	DELL	E228WFPc	CN-OX765G-64180-88P-09ZM	FCC DoC	Provided by Lab
D	USB Keyboard	DELL	SK-8115	MY-0J4635-71619-67V-0111	FCC Standards	Provided by Lab
E	Printer	EPSON	LQ-300+II	G88Y074085	FCC DoC	Provided by Lab
F	Modem	ACEEX	1414	0206026771	IFAXDM1414	Provided by Lab

1. All power cords of the above support units are non-shielded (1.8m).

ID	Descriptions	Qty.	Length (m)	Shielding (Yes/No)	Cores (Qty.)	Remarks
1	VGA Cable	1	1.8	Yes	2	Provided by Lab
2	USB Cable	1	1.8	Yes	1	Provided by Lab
3	USB Cable	1	1.8	Yes	0	Provided by Lab
4	RS-232 Cable	1	1	Yes	0	Provided by Lab

Note: The cores are originally attached to the cables.

5 Radiated Emissions up to 1 GHz

5.1 Limits

Emissions radiated outside of the specified bands, shall be according to the general radiated limits as following:

Radiated Emissions Limits at 10 meters (dBμV/m)				
Frequencies (MHz)	FCC 15B / ICES-003, Class A	FCC 15B / ICES-003, Class B	CISPR 22, Class A	CISPR 22, Class B
30-88	39	29.5	40	30
88-216	43.5	33.1		
216-230	46.4	35.6		
230-960			47	37
960-1000	49.5	43.5		

Radiated Emissions Limits at 3 meters (dBμV/m)				
Frequencies (MHz)	FCC 15B / ICES-003, Class A	FCC 15B / ICES-003, Class B	CISPR 22, Class A	CISPR 22, Class B
30-88	49.5	40	50.5	40.5
88-216	54	43.5		
216-230	56.9	46		
230-960			57.5	47.5
960-1000	60	54		

Notes:
1. The lower limit shall apply at the transition frequencies.
2. Emission level (dBuV/m) = 20 log Emission level (uV/m).
3. QP detector shall be applied if not specified.

5.2 Test Instruments

DESCRIPTION & MANUFACTURER	MODEL NO.	SERIAL NO.	CALIBRATED DATE	CALIBRATED UNTIL
Test Receiver Agilent	N9038A	MY50010125	Apr. 15, 2017	Apr. 14, 2018
	N9038A	MY50010132	June. 16, 2017	June. 15, 2018
Pre-Amplifier Sonoma	310N	352925	Aug. 28, 2017	Aug. 27, 2018
	310N	352926	Aug. 28, 2017	Aug. 27, 2018
Trilog Broadband Antenna SCHWARZBECK	VULB 9168	9168-359	Dec. 28, 2016	Dec. 27, 2017
	VULB 9168	9168-358	Dec. 16, 2016	Dec. 15, 2017
Fixed attenuator Mini-Circuits	UNAT-5+	CHF-001	Sep. 07, 2017	Sep. 06, 2018
	UNAT-5+	CHF-002	Sep. 07, 2017	Sep. 06, 2018
RF Cable	8D-FB	CHFCAB-001-1 CHFCAB-001-3 CHFCAB-001-4	Sep. 20, 2017	Sep. 19, 2018
		CHFCAB-002-1 CHFCAB-002-3 CHFCAB-002-4	Sep. 20, 2017	Sep. 19, 2018
Software BVADT	ADT_Radiated_V8.7.08	NA	NA	NA
Antenna Tower & Turn Table CT	NA	NA	NA	NA

Note:

1. The calibration interval of the above test instruments are 12 months and the calibrations are traceable to NML/ROC and NIST/USA.
2. The test was performed in Chamber F room
3. The VCCI Site Registration No. is R-3252.
4. The CANADA Site Registration No. is IC 7450H-1.
5. Tested Date: Nov. 15, 2017.

5.3 Test Arrangement

a. The EUT was placed on the top of a rotating table 0.8 meters above the ground at an accredited test facility. The table was rotated 360 degrees to determine the position of the highest radiation.
b. The EUT was set 10 meters away from the interference-receiving antenna, which was mounted on the top of a variable-height antenna tower.
c. The antenna is a broadband antenna, and its height is varied from one meter to four meters above the ground to determine the maximum value of the field strength. Both horizontal and vertical polarizations of the antenna are set to make the measurement.
d. For each suspected emission, the EUT was arranged to its worst case and then the antenna was tuned to heights from 1 meter to 4 meters and the rotatable table was turned from 0 degrees to 360 degrees to find the maximum reading.
e. The test-receiver system was set to quasi-peak detect function and specified bandwidth with maximum hold mode when the test frequency is up to 1 GHz.

Note: The resolution bandwidth and video bandwidth of test receiver/spectrum analyzer is 120kHz for quasi-peak detection (QP) at frequency up to 1GHz.

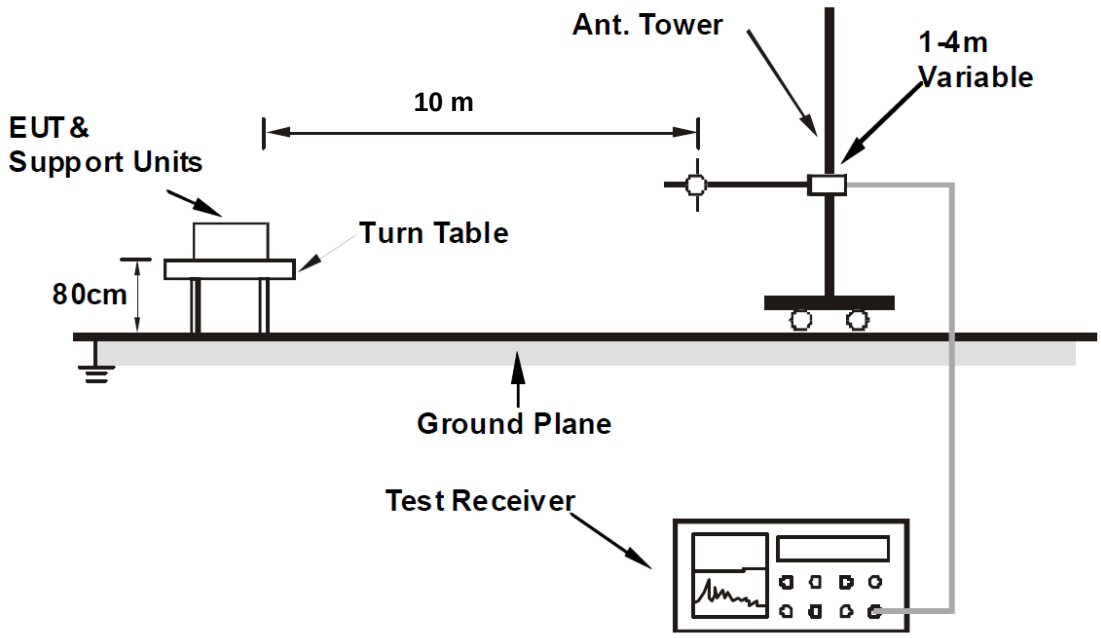

For the actual test configuration, please refer to the related Item – Photographs of the Test Configuration.

5.4 Supplementary Information

There is not any deviation from the test standards for the test method.

5.5 Test Results

Frequency Range	30MHz ~ 1GHz	Detector Function & Resolution Bandwidth	Quasi-Peak (QP), 120kHz
Input Power	DC 1.5V from battery	Environmental Conditions	23℃, 71%RH
Tested by	David Chuang		
Test Mode	Mode 1		

Antenna Polarity & Test Distance : Horizontal at 10 m								
No	Frequency (MHz)	Emission Level (dBuV/m)	Limit (dBuV/m)	Margin (dB)	Antenna Height (m)	Table Angle (Degree)	Raw Value (dBuV)	Correction Factor (dB/m)
1	36.72	18.29 QP	30.00	-11.71	3.00 H	14	32.20	-13.91
2	60.87	17.89 QP	30.00	-12.11	4.00 H	312	31.64	-13.75
3	109.69	18.86 QP	30.00	-11.14	4.00 H	175	34.62	-15.76
4	366.47	21.63 QP	37.00	-15.37	2.00 H	223	31.40	-9.77
5	488.54	27.18 QP	37.00	-9.82	2.00 H	66	33.88	-6.70
6	579.75	30.01 QP	37.00	-6.99	1.00 H	184	34.82	-4.81

Remarks:

1. Emission Level(dBuV/m) = Raw Value(dBuV) + Correction Factor(dB/m)
2. Correction Factor(dB/m) = Antenna Factor (dB/m) + Cable Factor (dB) – Pre-Amplifier Factor (dB)
3. The other emission levels were very low against the limit.
4. Margin value = Emission level – Limit value

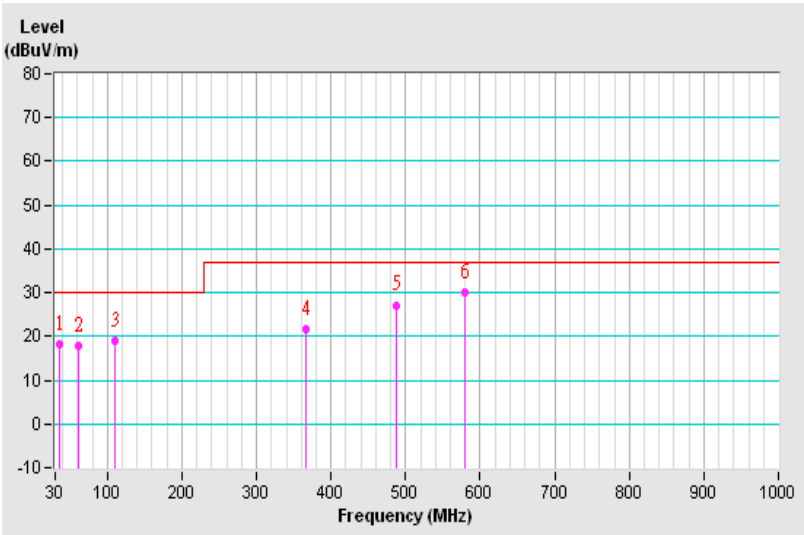

Frequency Range	30MHz ~ 1GHz	Detector Function & Resolution Bandwidth	Quasi-Peak (QP), 120kHz
Input Power	DC 1.5V from battery	Environmental Conditions	23℃, 71%RH
Tested by	David Chuang		
Test Mode	Mode 1		

Antenna Polarity & Test Distance : Vertical at 10 m								
No	Frequency (MHz)	Emission Level (dBuV/m)	Limit (dBuV/m)	Margin (dB)	Antenna Height (m)	Table Angle (Degree)	Raw Value (dBuV)	Correction Factor (dB/m)
1	**30.65**	**25.53 QP**	**30.00**	**-4.47**	**4.00 V**	**121**	**39.93**	**-14.40**
2	59.97	23.56 QP	30.00	-6.44	2.00 V	348	36.94	-13.38
3	110.15	24.51 QP	30.00	-5.49	1.00 V	62	40.20	-15.69
4	218.16	22.65 QP	30.00	-7.35	1.00 V	112	38.38	-15.73
5	365.40	25.54 QP	37.00	-11.46	1.00 V	112	35.21	-9.67
6	488.74	25.22 QP	37.00	-11.78	1.00 V	83	31.47	-6.25

Remarks:

1. Emission Level(dBuV/m) = Raw Value(dBuV) + Correction Factor(dB/m)
2. Correction Factor(dB/m) = Antenna Factor (dB/m) + Cable Factor (dB) – Pre-Amplifier Factor (dB)
3. The other emission levels were very low against the limit.
4. Margin value = Emission level – Limit value

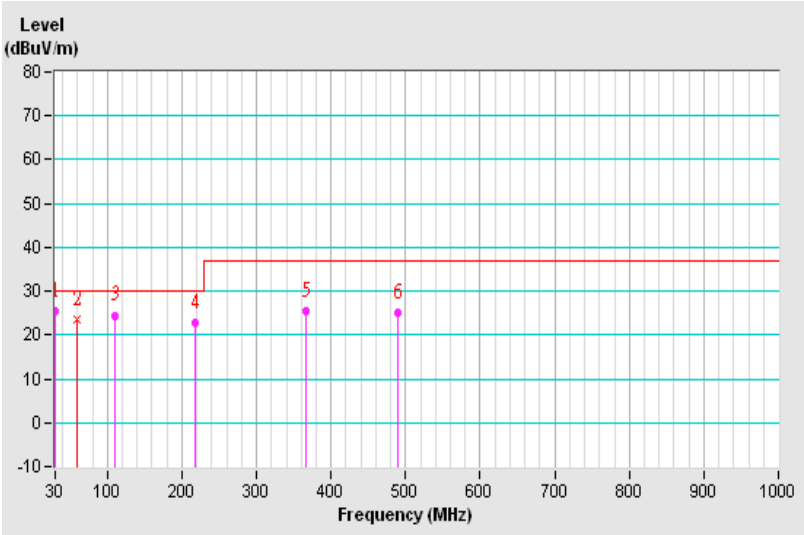

6 Radiated Emissions above 1 GHz

6.1 Limits

Emissions radiated outside of the specified bands, shall be according to the general radiated limits as following:

Radiated Emissions Limits at 10 meters (dBμV/m)				
Frequencies (MHz)	FCC 15B / ICES-003, Class A	FCC 15B / ICES-003, Class B	CISPR 22, Class A	CISPR 22, Class B
1000-3000	Avg: 49.5 Peak: 69.5	Avg: 43.5 Peak: 63.5	Not defined	Not defined
Above 3000			Not defined	Not defined

Radiated Emissions Limits at 3 meters (dBμV/m)				
Frequencies (MHz)	FCC 15B / ICES-003, Class A	FCC 15B / ICES-003, Class B	CISPR 22, Class A	CISPR 22, Class B
1000-3000	Avg: 60 Peak: 80	Avg: 54 Peak: 74	Avg: 56 Peak: 76	Avg: 50 Peak: 70
Above 3000			Avg: 60 Peak: 80	Avg: 54 Peak: 74

Notes:
1. The lower limit shall apply at the transition frequencies.
2. Emission level (dBuV/m) = 20 log Emission level (uV/m).
3. As shown in 15.35(b), for frequencies above 1000MHz, the field strength limits are based on average detector, however, the peak field strength of any emission shall not exceed the maximum permitted average limits, specified above by more than 20dB under any condition of modulation.

Frequency Range (For unintentional radiators)

Highest frequency generated or used in the device or on which the device operates or tunes (MHz)	Upper frequency of measurement range (MHz)
Below 1.705	30
1.705-108	1000
108-500	2000
500-1000	5000
Above 1000	5th harmonic of the highest frequency or 40GHz, whichever is lower

6.2 Test Instruments

DESCRIPTION & MANUFACTURER	MODEL NO.	SERIAL NO.	CALIBRATED DATE	CALIBRATED UNTIL
Test Receiver Agilent	N9038A	MY50010125	Apr. 15, 2017	Apr. 14, 2018
Pre-Amplifier Agilent	8449B	3008A01975	Feb. 26, 2017	Feb. 25, 2018
Horn Antenna SCHWARZBECK	BBHA 9120D	D123	Dec. 15, 2016	Dec. 14, 2017
RF Coaxial Cable	EMC104-SM-SM-11000	170209	Mar. 07, 2017	Mar. 06, 2018
RF Coaxial Cable	EMC104-SM-SM-6000	170207	Mar. 07, 2017	Mar. 06, 2018
RF Coaxial Cable	EMC104-SM-SM-2500	170206	Mar. 07, 2017	Mar. 06, 2018
Software BVADT	ADT_Radiated_ V8.7.08	NA	NA	NA
Antenna Tower & Turn Table CT	NA	NA	NA	NA
Fix tool for Boresight antenna tower	BAF-01	5	NA	NA

Note:

1. The calibration interval of the above test instruments are 12 months and the calibrations are traceable to NML/ROC and NIST/USA.
2. The test was performed in Chamber F room
3. Tested Date: Nov. 15, 2017

6.3 Test Arrangement

a. The EUT was placed on the top of a rotating table 0.8 meters above the ground at an accredited chamber room. The table was rotated 360 degrees to determine the position of the highest radiation.
b. The EUT was set 3 meters away from the interference-receiving antenna, which was mounted on the top of a variable-height antenna tower.
c. The height of antenna can be varied from one meter to four meters, the height of adjustment depends on the EUT height and the antenna 3dB beamwidth both, to detect the maximum value of the field strength. Both horizontal and vertical polarizations of the antenna are set to make the measurement.
d. For each suspected emission, the EUT was arranged to its worst case and then the antenna was tuned to heights and the rotatable table was turned from 0 degrees to 360 degrees to find the maximum reading.
e. The spectrum analyzer system was set to peak and average detect function and specified bandwidth with maximum hold mode when the test frequency is above 1 GHz.

Note: The resolution bandwidth of test receiver/spectrum analyzer is 1MHz and video bandwidth is 3MHz for Peak detection (PK) at frequency above 1GHz. The resolution bandwidth of test receiver/spectrum analyzer is 1 MHz for Average detection (AV) at frequency above 1GHz.

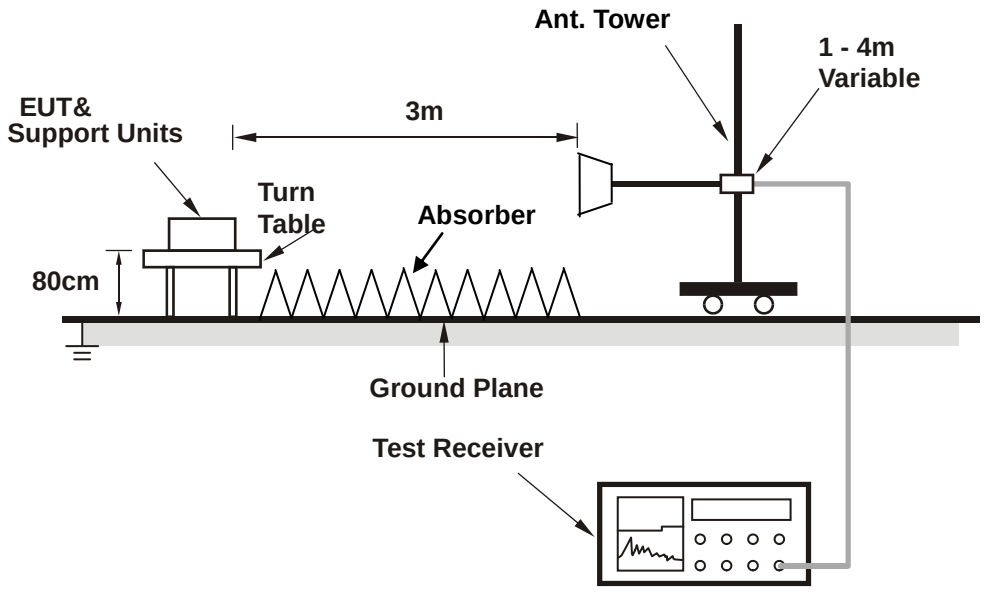

The test arrangement is in accordance with ANSI 63.4:2014. For the actual test configuration, please refer to the related item – Photographs of the Test Configuration.

6.4 Supplementary Information

There is not any deviation from the test standards for the test method

6.5 Test Results

Frequency Range	1GHz~12.5GHz	Detector Function & Resolution Bandwidth	Peak (PK) / Average (AV), 1MHz
Input Power	DC 1.5V from battery	Environmental Conditions	24℃, 71%RH
Tested by	David Chuang		
Test Mode	Mode 1		

Antenna Polarity & Test Distance : Horizontal at 3 m								
No	Frequency (MHz)	Emission Level (dBuV/m)	Limit (dBuV/m)	Margin (dB)	Antenna Height (m)	Table Angle (Degree)	Raw Value (dBuV)	Correction Factor (dB/m)
1	1500.00	42.43 PK	74.00	-31.57	1.00 H	140	45.94	-3.51
2	1500.00	34.69 AV	54.00	-19.31	1.00 H	140	38.20	-3.51
3	1750.00	44.91 PK	74.00	-29.09	1.00 H	183	47.38	-2.47
4	1750.00	27.61 AV	54.00	-26.39	1.00 H	183	30.08	-2.47
5	2055.00	42.94 PK	74.00	-31.06	1.00 H	134	43.87	-0.93
6	2055.00	25.99 AV	54.00	-28.01	1.00 H	134	26.92	-0.93
7	3320.00	48.50 PK	74.00	-25.50	1.00 H	147	45.36	3.14
8	3320.00	29.45 AV	54.00	-24.55	1.00 H	147	26.31	3.14
9	3390.00	49.55 PK	74.00	-24.45	1.00 H	327	46.27	3.28
10	3390.00	30.62 AV	54.00	-23.38	1.00 H	327	27.34	3.28
11	11060.00	55.96 PK	74.00	-18.04	1.00 H	13	33.55	22.41
12	**11060.00**	**43.14 AV**	**54.00**	**-10.86**	**1.00 H**	**13**	**20.73**	**22.41**

Remarks:

1. Emission Level(dBuV/m) = Raw Value(dBuV) + Correction Factor(dB/m)
2. Correction Factor(dB/m) = Antenna Factor (dB/m) + Cable Factor (dB) – Pre-Amplifier Factor (dB)
3. The other emission levels were very low against the limit.
4. Margin value = Emission level – Limit value

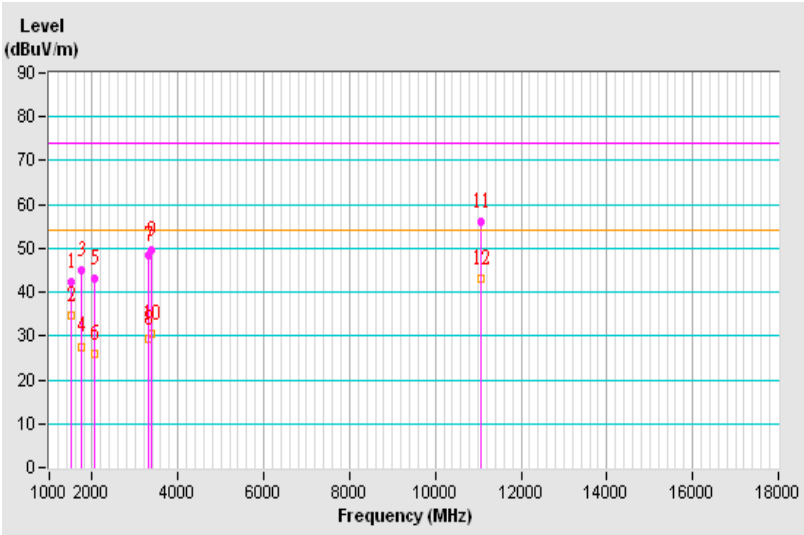

Frequency Range	1GHz~12.5GHz	Detector Function & Resolution Bandwidth	Peak (PK) / Average (AV), 1MHz
Input Power	DC 1.5V from battery	Environmental Conditions	24℃, 71%RH
Tested by	David Chuang		
Test Mode	Mode 1		

Antenna Polarity & Test Distance : Vertical at 3 m								
No	Frequency (MHz)	Emission Level (dBuV/m)	Limit (dBuV/m)	Margin (dB)	Antenna Height (m)	Table Angle (Degree)	Raw Value (dBuV)	Correction Factor (dB/m)
1	2000.00	40.53 PK	74.00	-33.47	1.00 V	170	41.78	-1.25
2	2000.00	26.05 AV	54.00	-27.95	1.00 V	170	27.30	-1.25
3	3000.00	43.23 PK	74.00	-30.77	1.00 V	296	40.54	2.69
4	3000.00	32.75 AV	54.00	-21.25	1.00 V	296	30.06	2.69
5	3390.00	43.48 PK	74.00	-30.52	1.00 V	277	40.20	3.28
6	3390.00	28.59 AV	54.00	-25.41	1.00 V	277	25.31	3.28
7	3950.00	42.03 PK	74.00	-31.97	1.00 V	11	37.17	4.86
8	3950.00	29.23 AV	54.00	-24.77	1.00 V	11	24.37	4.86
9	10660.00	55.37 PK	74.00	-18.63	1.00 V	188	34.49	20.88
10	10660.00	41.70 AV	54.00	-12.30	1.00 V	188	20.82	20.88
11	12490.00	55.67 PK	74.00	-18.33	1.00 V	88	34.13	21.54
12	12490.00	41.95 AV	54.00	-12.05	1.00 V	88	20.41	21.54

Remarks:

1. Emission Level(dBuV/m) = Raw Value(dBuV) + Correction Factor(dB/m)
2. Correction Factor(dB/m) = Antenna Factor (dB/m) + Cable Factor (dB) – Pre-Amplifier Factor (dB)
3. The other emission levels were very low against the limit.
4. Margin value = Emission level – Limit value

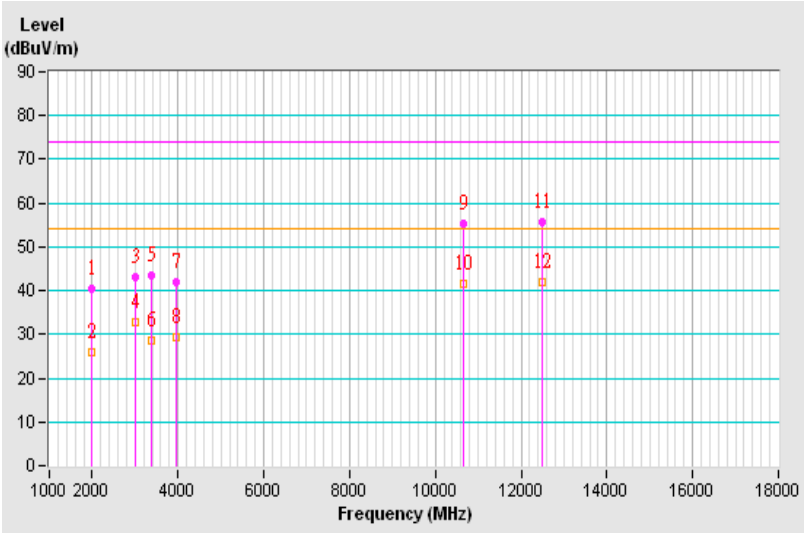

7 Pictures of Test Arrangements

Please refer to the attached file (Test Setup Photo).

Appendix – Information on the Testing Laboratories

We, Bureau Veritas Consumer Products Services (H.K.) Ltd., Taoyuan Branch, were founded in 1988 to provide our best service in EMC, Radio, Telecom and Safety consultation. Our laboratories are accredited and approved according to ISO/IEC 17025.

If you have any comments, please feel free to contact us at the following:

Linko EMC/RF Lab
Tel: 886-2-26052180
Fax: 886-2-26051924

Hsin Chu EMC/RF/Telecom Lab
Tel: 886-3-6668565
Fax: 886-3-6668323

Hwa Ya EMC/RF/Safety Lab
Tel: 886-3-3183232
Fax: 886-3-3270892

Email: service.adt@tw.bureauveritas.com
Web Site: www.bureauveritas-adt.com

The address and road map of all our labs can be found in our web site also.

--- END ---