DFS Test Report

Report No.: RF180928E04-4

FCC ID: JNZNR0017

Test Model: N-R0017

Received Date: Sep. 28, 2018

Test Date: Nov. 27, 2018

Issued Date: Jan. 14, 2019

Applicant: LOGITECH FAR EAST LTD.

Address: #2 Creation Rd. 4, Science-Based Ind. Park Hsinchu Taiwan, R.O.C.

Issued By: Bureau Veritas Consumer Products Services (H.K.) Ltd., Taoyuan Branch Hsin Chu Laboratory

Lab Address: E-2, No.1, Li Hsin 1st Road, Hsinchu Science Park, Hsinchu City 300, Taiwan R.O.C.

Test Location: E-2, No.1, Li Hsin 1st Road, Hsinchu Science Park, Hsinchu City 300, Taiwan R.O.C.

FCC Registration / Designation Number: 723255 / TW2022

This report is for your exclusive use. Any copying or replication of this report to or for any other person or entity, or use of our name or trademark, is permitted only with our prior written permission. This report sets forth our findings solely with respect to the test samples identified herein. The results set forth in this report are not indicative or representative of the quality or characteristics of the lot from which a test sample was taken or any similar or identical product unless specifically and expressly noted. Our report includes all of the tests requested by you and the results thereof based upon the information that you provided to us. You have 60 days from date of issuance of this report to notify us of any material error or omission caused by our negligence, provided, however, that such notice shall be in writing and shall specifically address the issue you wish to raise. A failure to raise such issue within the prescribed time shall constitute your unqualified acceptance of the completeness of this report, the tests conducted and the correctness of the report contents. Unless specific mention, the uncertainty of measurement has been explicitly taken into account to declare the compliance or non-compliance to the specification. The report must not be used by the client to claim product certification, approval, or endorsement by TAF or any government agencies.

Table of Contents

Release Control Record **3**

1 Certificate of Conformity **4**

2 EUT Information **5**

2.1 Operating Frequency Bands and Mode of EUT 5
2.2 EUT Software and Firmware Version 5
2.3 Description of Available Antennas to the EUT 5
2.4 EUT Maximum Conducted Power 6
2.5 EUT Maximum EIRP Power 7
2.6 Transmit Power Control (TPC) 8
2.7 Statement of Manufacturer 8

3. U-NII DFS Rule Requirements **9**

3.1 Working Modes and Required Test Items 9
3.2 Test Limits and Radar Signal Parameters 10

4. Test & Support Equipment List **13**

4.1 Test Instruments 13
4.2 Description of Support Units 13

5. Test Procedure **14**

5.1 DFS Measurement System 14
5.2 Calibration of DFS Detection Threshold Level 15
5.3 Deviation from Test Standard 16
5.4 Conducted Test Setup Configuration 16
5.4.1 Client without Radar Detection Mode 16

6. Test Results **17**

6.1 Summary of Test Results 17
6.2 Test Results 18
6.2.1 Test Mode: Device Operating In Client without Radar Detection Mode. 18
6.2.2 Channel Closing Transmission and Channel Move Time 19
6.2.3 Non-Occupancy Period 20
6.2.4 Non-Associated Test 22
6.2.5 Non- Co-Channel Test 22

7. Information on the Testing Laboratories **23**

8. APPENDIX-A **24**

Release Control Record

Issue No.	Description	Date Issued
RF180928E04-4	Original release.	Jan. 14, 2019

1 Certificate of Conformity

Product: Universal hub

Brand: Logitech

Test Model: N-R0017

Sample Status: ENGINEERING SAMPLE

Applicant: LOGITECH FAR EAST LTD.

Test Date: Nov. 27, 2018

Standards: FCC Part 15, Subpart E (Section 15.407)
KDB 905462 D02 UNII DFS Compliance Procedures New Rules v02
KDB 905462 D03 Clients Without Radar Detection New Rules v01r02

The above equipment has been tested by **Bureau Veritas Consumer Products Services (H.K.) Ltd., Taoyuan Branch**, and found compliance with the requirement of the above standards. The test record, data evaluation & Equipment Under Test (EUT) configurations represented herein are true and accurate accounts of the measurements of the sample's EMC characteristics under the conditions specified in this report.

Prepared by : Phoenix Huang , **Date:** Jan. 14, 2019
Phoenix Huang / Specialist

Approved by : , **Date:** Jan. 14, 2019
May Chen / Manager

2 EUT Information

2.1 Operating Frequency Bands and Mode of EUT

Table 1: Operating Frequency Bands and Mode of EUT

Operational Mode	Operating Frequency Range	
	5250~5350MHz	5470~5725MHz
Client without radar detection and ad hoc function	✓	✓

2.2 EUT Software and Firmware Version

Table 2: The EUT Software/Firmware Version

No.	Product	Model No.	Software/Firmware Version
1	Universal hub	N-R0017	0.0.510

2.3 Description of Available Antennas to the EUT

Table 3: Antenna List

Transmitter Circuit	Antenna Gain with cable loss (dBi)	Frequency range (GHz)	Antenna Type	Antenna Connector
Chain 0	3.5	2.4~2.4835	Monopole (PCB)	NA
	3.8	5.15~5.35		
	4	5.5~5.85		
Chain 1	2.9	2.4~2.4835	Monopole (PCB)	NA
	3	5.15~5.35		
	4.5	5.5~5.85		

2.4 EUT Maximum Conducted Power

Table 4: The Measured Conducted Output Power

802.11a

FREQUENCY BAND (MHz)	MAX. POWER	
	OUTPUT POWER (mW)	OUTPUT POWER (dBm)
5250~5350	29.107	14.64
5470~5725	37.931	15.79

802.11ac (VHT20)

FREQUENCY BAND (MHz)	MAX. POWER	
	OUTPUT POWER (mW)	OUTPUT POWER (dBm)
5250~5350	26.73	14.27
5470~5725	34.119	15.33

802.11ac (VHT40)

FREQUENCY BAND (MHz)	MAX. POWER	
	OUTPUT POWER (mW)	OUTPUT POWER (dBm)
5250~5350	27.164	14.34
5470~5725	34.754	15.41

802.11ac (VHT80)

FREQUENCY BAND (MHz)	MAX. POWER	
	OUTPUT POWER (mW)	OUTPUT POWER (dBm)
5250~5350	15.311	11.85
5470~5725	19.409	12.88

2.5 EUT Maximum EIRP Power

Table 5: The EIRP Output Power List

802.11a

FREQUENCY BAND (MHz)	MAX. POWER	
	OUTPUT POWER (mW)	OUTPUT POWER (dBm)
5250~5350	69.823	18.44
5470~5725	106.905	20.29

802.11ac (VHT20)

FREQUENCY BAND (MHz)	MAX. POWER	
	OUTPUT POWER (mW)	OUTPUT POWER (dBm)
5250~5350	64.121	18.07
5470~5725	96.161	19.83

802.11ac (VHT40)

FREQUENCY BAND (MHz)	MAX. POWER	
	OUTPUT POWER (mW)	OUTPUT POWER (dBm)
5250~5350	65.163	18.14
5470~5725	97.949	19.91

802.11ac (VHT80)

FREQUENCY BAND (MHz)	MAX. POWER	
	OUTPUT POWER (mW)	OUTPUT POWER (dBm)
5250~5350	36.728	15.65
5470~5725	54.702	17.38

2.6 Transmit Power Control (TPC)

U-NII devices operating in the 5.25-5.35 GHz band and the 5.47-5.725 GHz band shall employ a TPC mechanism. The U-NII device is required to have the capability to operate at least 6 dB below the mean EIRP value of 30 dBm. A TPC mechanism is not required for systems with an e.i.r.p. of less than 500 mW.

Applicable	EIRP	FCC 15.407 (h)(1)
	>500mW	The TPC mechanism is required for system with an EIRP of above 500mW
√	<500mW	The TPC mechanism is not required for system with an EIRP of less 500mW

2.7 Statement of Manufacturer

Manufacturer statement confirming that information regarding the parameters of the detected Radar Waveforms is not available to the end user. **And the device doesn't have Ad Hoc mode on DFS frequency band.**

3. U-NII DFS Rule Requirements

3.1 Working Modes and Required Test Items

The manufacturer shall state whether the UUT is capable of operating as a Master and/or a Client. If the UUT is capable of operating in more than one operating mode then each operating mode shall be tested separately. See tables 6 and 7 for the applicability of DFS requirements for each of the operational modes.

Table 6: Applicability of DFS Requirements Prior To Use a Channel

Requirement	Operational Mode		
	Master	Client without radar detection	Client with radar detection
Non-Occupancy Period	✓	✓ note	✓
DFS Detection Threshold	✓	Not required	✓
Channel Availability Check Time	✓	Not required	Not required
U-NII Detection Bandwidth	✓	Not required	✓
Note: Regarding KDB 905462 D03 Client Without Radar Detection New Rules v01r02 section(b)(5/6), If the client moves with the master, the device is considered compliant if nothing appears in the client non-occupancy period test. For devices that shut down (rather than moving channels), no beacons should appear. An analyzer plot that contains a single 30-minute sweep on the original channel.			

Table 7: Applicability of DFS Requirements during Normal Operation.

Requirement	Operational Mode	
	Master or Client with radar detection	Client without radar detection
DFS Detection Threshold	✓	Not required
Channel Closing Transmission Time	✓	✓
Channel Move Time	✓	✓
U-NII Detection Bandwidth	✓	Not required

Additional requirements for devices with multiple bandwidth modes	Master or Client with radar detection	Client without radar detection
U-NII Detection Bandwidth and Statistical Performance Check	All BW modes must be tested	Not required
Channel Move Time and Channel Closing Transmission Time	Test using widest BW mode available	Test using the widest BW mode available for the link
All other tests	Any single BW mode	Not required
Note: Frequencies selected for statistical performance check (Section 7.8.4) should include several frequencies within the radar detection bandwidth and frequencies near the edge of the radar detection bandwidth. For 802.11 devices it is suggested to select frequencies in each of the bonded 20 MHz channels and the channel center frequency.		

3.2 Test Limits and Radar Signal Parameters

Detection Threshold Values

Table 8: DFS Detection Thresholds for Master Devices and Client Devices with Radar Detection

Maximum Transmit Power	Value (See Notes 1, 2, and 3)
EIRP ≥ 200 milliwatt	-64 dBm
EIRP < 200 milliwatt and power spectral density < 10 dBm/MHz	-62 dBm
EIRP < 200 milliwatt that do not meet the power spectral density requirement	-64 dBm
Note 1: This is the level at the input of the receiver assuming a 0 dBi receive antenna. Note 2: Throughout these test procedures an additional 1 dB has been added to the amplitude of the test transmission waveforms to account for variations in measurement equipment. This will ensure that the test signal is at or above the detection threshold level to trigger a DFS response. Note3: EIRP is based on the highest antenna gain. For MIMO devices refer to KDB Publication 662911 D01.	

Table 9: DFS Response Requirement Values

Parameter	Value
Non-occupancy period	Minimum 30 minutes
Channel Availability Check Time	60 seconds
Channel Move Time	10 seconds See Note 1.
Channel Closing Transmission Time	200 milliseconds + an aggregate of 60 milliseconds over remaining 10 second period. See Notes 1 and 2.
U-NII Detection Bandwidth	Minimum 100% of the U-NII 99% transmission power bandwidth. See Note 3
Note 1: Channel Move Time and the Channel Closing Transmission Time should be performed with Radar Type 0. The measurement timing begins at the end of the Radar Type 0 burst. Note 2: The Channel Closing Transmission Time is comprised of 200 milliseconds starting at the beginning of the Channel Move Time plus any additional intermittent control signals required to facilitate a Channel move (an aggregate of 60 milliseconds) during the remainder of the 10 second period. The aggregate duration of control signals will not count quiet periods in between transmissions. Note 3: During the U-NII Detection Bandwidth detection test, radar type 0 should be used. For each frequency step the minimum percentage of detection is 90 percent. Measurements are performed with no data traffic.	

Parameters of DFS Test Signals

Step intervals of 0.1 microsecond for Pulse Width, 1 microsecond for PRI, 1 MHz for chirp width and 1 for the number of pulses will be utilized for the random determination of specific test waveforms.

Table 10: Short Pulse Radar Test Waveforms

Radar Type	Pulse Width (µsec)	PRI (µsec)	Number of Pulses	Minimum Percentage of Successful Detection	Minimum Number of Trials
0	1	1428	18	See Note 1	See Note 1
1	1	Test A: 15 unique PRI values randomly selected from the list of 23 PRI values in Table 5a Test B: 15 unique PRI values randomly selected within the range of 518-3066 µsec, with a minimum increment of 1 µsec, excluding PRI values selected in Test A	$\text{Roundup}\left\{\left(\frac{1}{360}\right)\cdot\left(\frac{19\cdot 10^6}{\text{PRI}_{\mu\text{sec}}}\right)\right\}$	60%	30
2	1-5	150-230	23-29	60%	30
3	6-10	200-500	16-18	60%	30
4	11-20	200-500	12-16	60%	30
Aggregate (Radar Types 1-4)				80%	120

Note 1: Short Pulse Radar Type 0 should be used for the detection bandwidth test, channel move time, and channel closing time tests.

Table 11: Long Pulse Radar Test Waveform

Radar Type	Pulse Width (µsec)	Chirp Width (MHz)	PRI (µsec)	Number of Pulses Per Burst	Number of Bursts	Minimum Percentage of Successful Detection	Minimum Number of Trials
5	50-100	5-20	1000-2000	1-3	8-20	80%	30

Three subsets of trials will be performed with a minimum of ten trials per subset. The subset of trials differ in where the Long Pulse Type 5 Signal is tuned in frequency.

a) the Channel center frequency
b) tuned frequencies such that 90% of the Long Pulse Type 5 frequency modulation is within the low edge of the UUT Occupied Bandwidth
c) tuned frequencies such that 90% of the Long Pulse Type 5 frequency modulation is within the high edge of the UUT Occupied Bandwidth

It include 10 trails for every subset, the formula as below,

For subset case 1: the center frequency of the signal generator will remain fixed at the center of the UUT Channel.

For subset case 2: to retain 90% frequency overlap between the radar signal and the UUT Occupied Bandwidth, the center frequency of the signal generator will vary for each of the ten trials in subset case 2. The center frequency of the signal generator for each trial is calculated by:

FL+(0.4$*Chirp\ Width$ [$in\ MHz$])

For subset case 3: to retain 90% frequency overlap between the radar signal and the UUT Occupied Bandwidth, the center frequency of the signal generator will vary for each of the ten trials in subset case 3. The center frequency of the signal generator for each trial is calculated by:

FH−(0.4$*Chirp\ Width$ [$in\ MHz$])

Table 12: Frequency Hopping Radar Test Waveform

Radar Type	Pulse Width (µsec)	PRI (µsec)	Pulses per Hop	Hopping Rate (kHz)	Hopping Sequence Length (msec)	Minimum Percentage of Successful Detection	Minimum Number of Trials
6	1	333	9	0.333	300	70%	30

4. Test & Support Equipment List

4.1 Test Instruments

Table 13: Test Instruments List

DESCRIPTION & MANUFACTURER	MODEL NO.	SERIAL NO.	CALIBRATED DATE	CALIBRATED UNTIL
Spectrum Analyzer Agilent	N9030B	MY57141948	June 01, 2018	May 31, 2019
Vector Signal Generator Agilent	E4438C	MY45094468	Nov. 19, 2018	Nov. 18, 2019
DFS Control Box	BV-DFS-CB	001	Dec. 05, 2017	Dec. 04, 2018

4.2 Description of Support Units

Table 14: Support Unit Information.

No.	Product	Brand	Model No.	FCC ID	SPEC.
1	WIRELESS AC MODULE	D-Link	WMC-AC01	RRK2012060056-1	The maximum EIRP is 27.64 dBm, Antenna Gain is 3.428dBi

NOTE: This device was functioned as a ☒Master ☐Slave device during the DFS test.

Table 15: Software/Firmware Information.

No.	Product	Model No.	Software/Firmware Version
1.	WIRELESS AC MODULE	WMC-AC01	1.00 Wed 06 Mar 2013

Note: This module WMC-AC01 was installed in the DIR-868L AP.

5. Test Procedure

5.1 DFS Measurement System

A complete DFS Measurement System consists of Radar signal generate system to generating the radar waveforms in Table 10, 11 and 12. The traffic monitoring system is specified to the type of unit under test (UUT).

Conducted Setup Configuration of DFS Measurement System

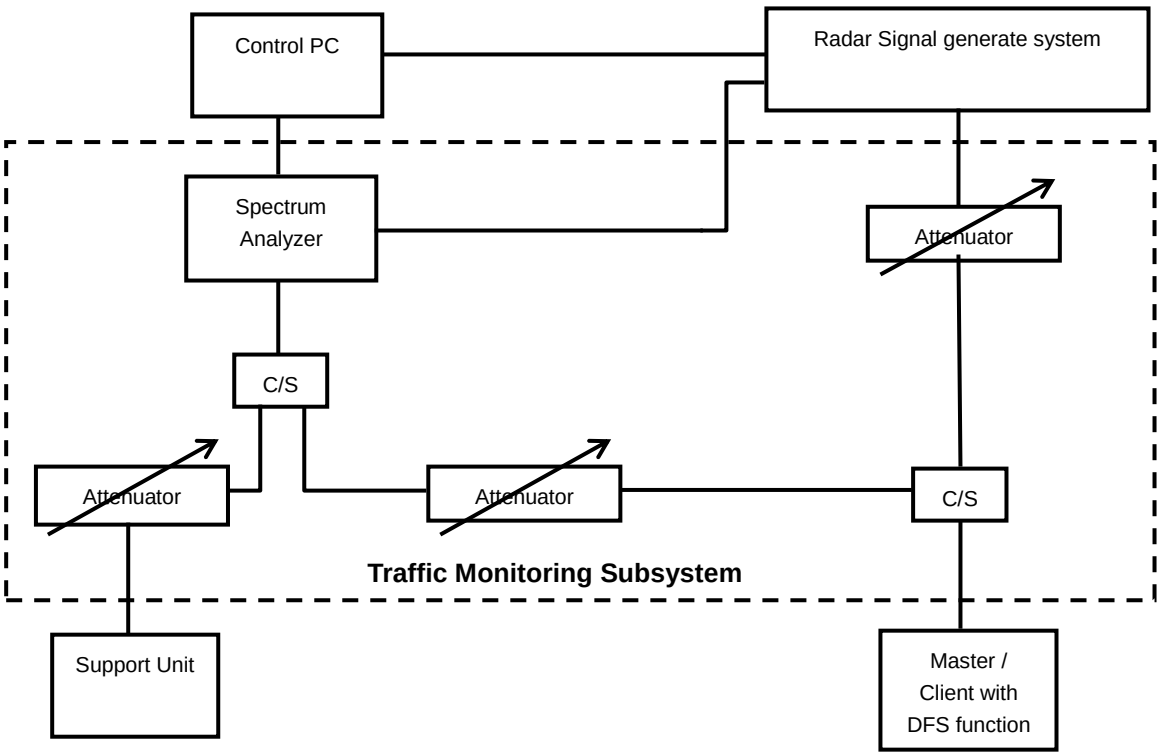

Channel Loading

System testing will be performed with channel-loading using means appropriate to the data types that are used by the unlicensed device. The following requirements apply:

a)	The data file must be of a type that is typical for the device (i.e., MPEG-2, MPEG-4, WAV, MP3, MP4, AVI, etc.) and must generally be transmitting in a streaming mode.	
b)	Software to ping the client is permitted to simulate data transfer but must have random ping intervals.	
c)	Timing plots are required with calculations demonstrating a minimum channel loading of approximately 17% or greater.	✓
d)	Unicast or Multicast protocols are preferable but other protocols may be used. The appropriate protocol used must be described in the test procedures.	

5.2 Calibration of DFS Detection Threshold Level

The measured channel is 5500 MHz in 20MHz Bandwidth, 5510MHz in 40MHz Bandwidth and 5530MHz in 80MHz Bandwidth. The radar signal was the same as transmitted channels, and injected into the antenna port of AP (master) or Client Device with Radar Detection, measured the channel closing transmission time and channel move time. The Master antenna gain is 3.428dBi and required detection threshold is -59.572dBm (= -64 +1 +3.428). The calibrated conducted detection threshold level is set to -59.572 dBm.

Conducted Setup Configuration of Calibration of DFS Detection Threshold Level

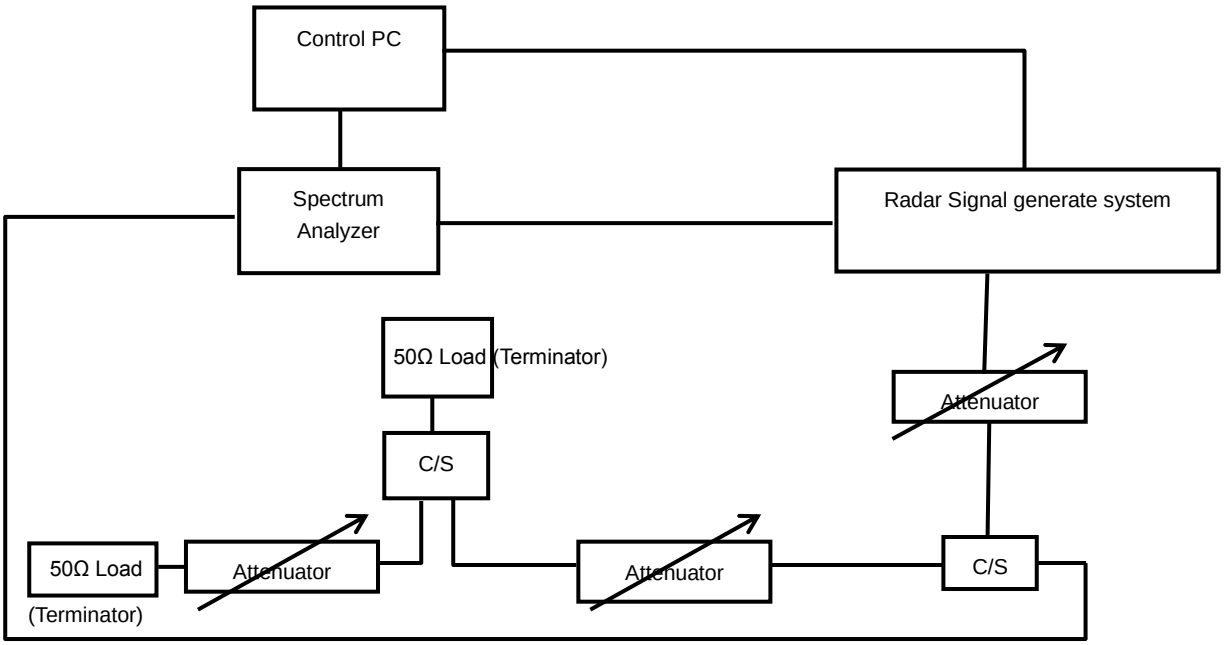

5.3 Deviation from Test Standard

No deviation.

5.4 Conducted Test Setup Configuration

5.4.1 Client without Radar Detection Mode

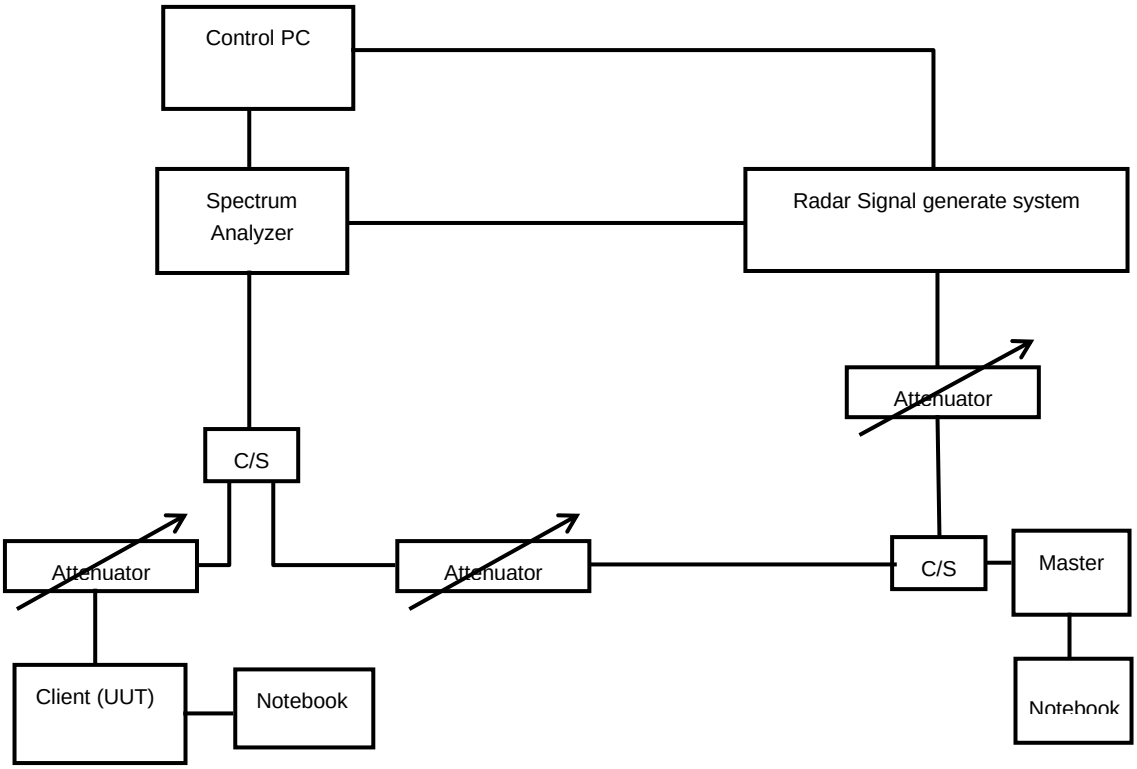

The UUT is a U-NII Device operating in Client mode without radar detection. The radar test signals are injected into the Master Device.

6. Test Results

6.1 Summary of Test Results

Clause	Test Parameter	Remarks	Pass/Fail
15.407	DFS Detection Threshold	Not Applicable	NA
15.407	Channel Availability Check Time	Not Applicable	NA
15.407	Channel Move Time	Applicable	Pass
15.407	Channel Closing Transmission Time	Applicable	Pass
15.407	Non- Occupancy Period	Applicable	Pass
15.407	U-NII Detection Bandwidth	Not Applicable	NA
15.407	Non-associated test	Applicable	Pass
15.407	Non-Co-Channel test	Applicable	Pass

6.2 Test Results

6.2.1 Test Mode: Device Operating In Client without Radar Detection Mode.

The radar test signals are injected into the Master Device.
This test was investigated for different bandwidth (20MHz、40MHz and 80MHz).
The following plots was done on 80MHz as a representative

DFS Detection Threshold

The Required detection threshold is -59.572dBm (= -64 +1 +3.428).
The conducted radar burst level is set lower than -59.572dBm.

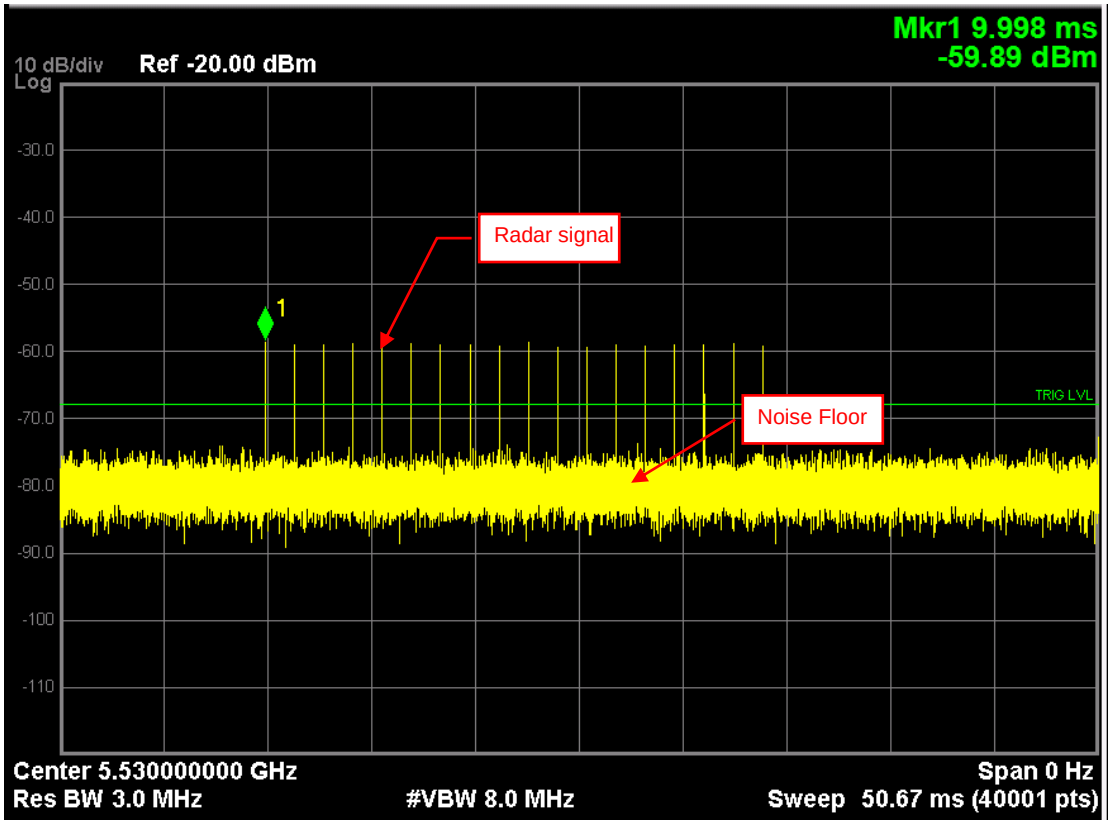

Radar Signal 0

6.2.2 Channel Closing Transmission and Channel Move Time

Radar Signal 0
802.11ac (VHT80)

Channel Closing Transmission Time & Channel Move Time @ CH106 - 5530MHz

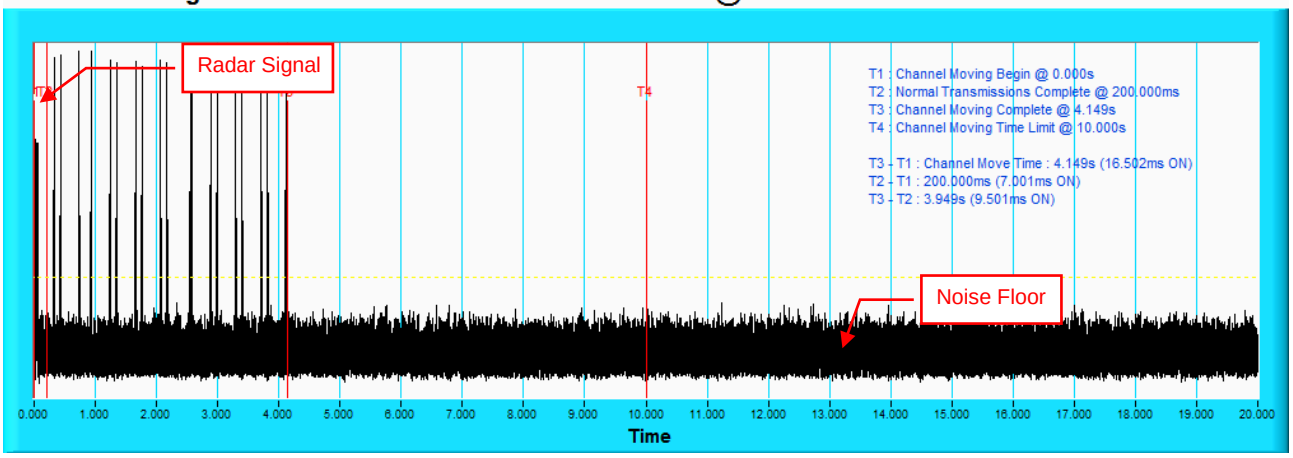

NOTE: T1 denotes the start of Channel Move Time upon the end of the last Radar burst. T2 denotes the data transmission time of 200ms from T1. T3 denotes the end of Channel Move Time. T4 denotes the 10 second from T1 to observe the aggregate duration of transmissions.

Channel Closing Transmission Time & Channel Move Time @ CH106 - 5530MHz

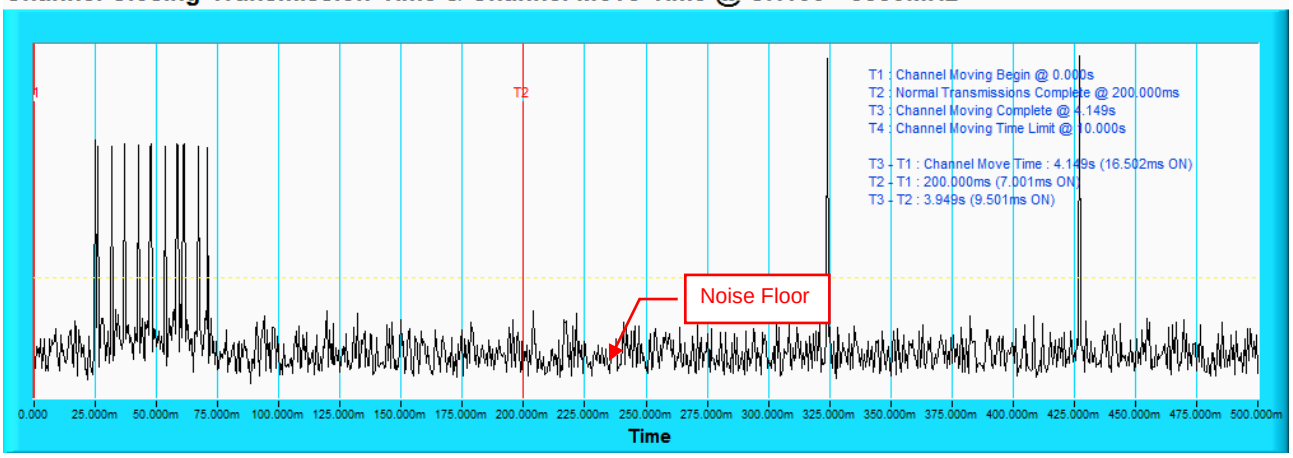

NOTE: An expanded plot for the device vacates the channel in the required 500ms.

6.2.3 Non-Occupancy Period

ASSOCIATED TEST

1) Test results demonstrating an associated client link is established with the master on a test frequency.

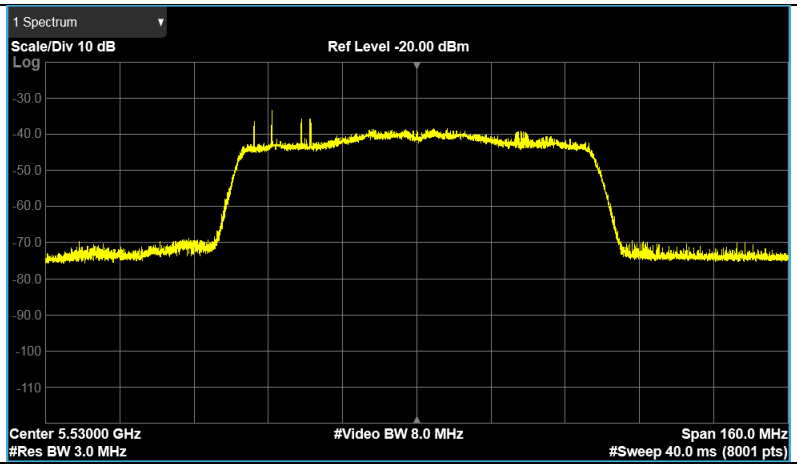

EUT (Client) links with master on 5530MHz

2) The client and DFS-certified master device are associated, and system testing will be performed with channel-loading for a non-occupancy period test.

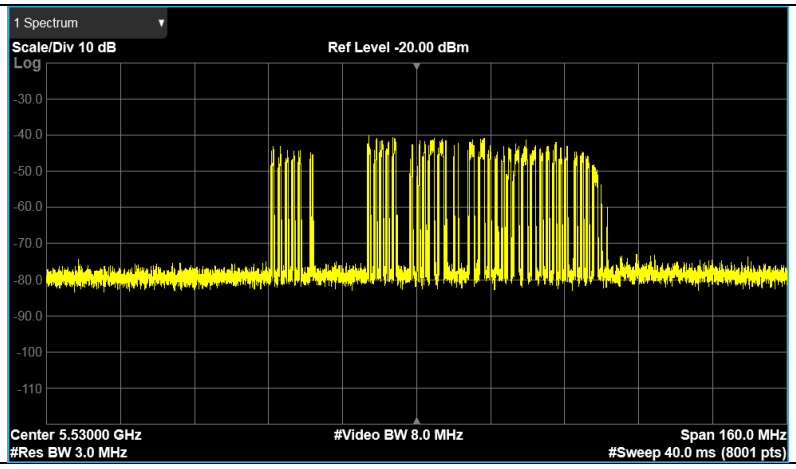

Client performed with channel-loading via master.

3). The device transmits one type of radar as specified in the DFS Order.

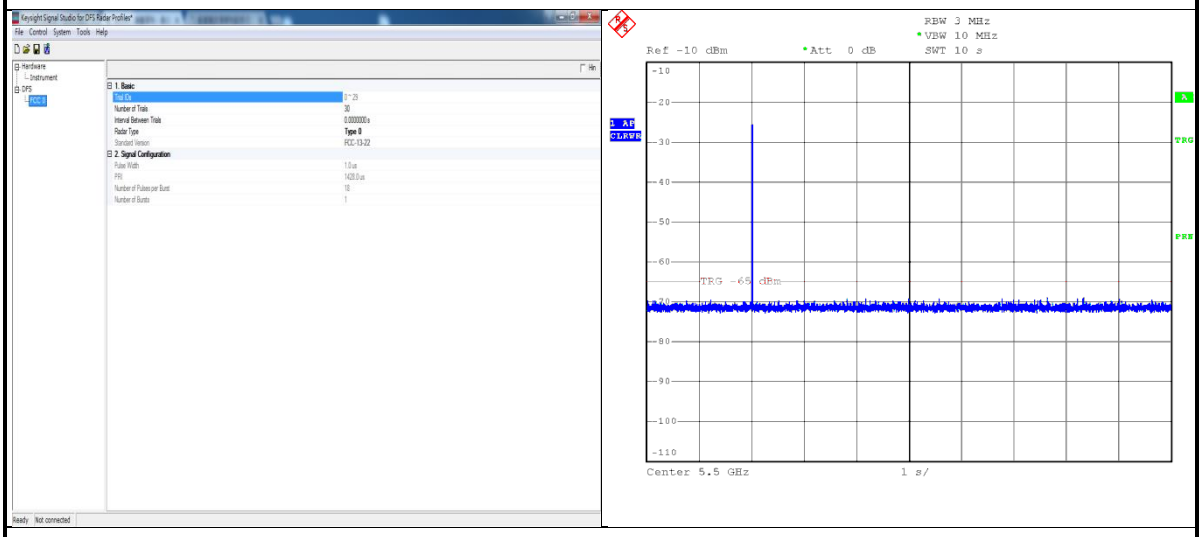

Radar 0 is used to test during DFS testing.

4) The test frequency has been monitored to ensure no transmission of any type has occurred for 30 minutes;

Note: If the client moves with the master, the device is considered compliant if nothing appears in the client non-occupancy period test. For devices that shut down (rather than moving channels), no beacons should appear;

5)An analyzer plot that contains a single 30-minute sweep on the original test frequency.

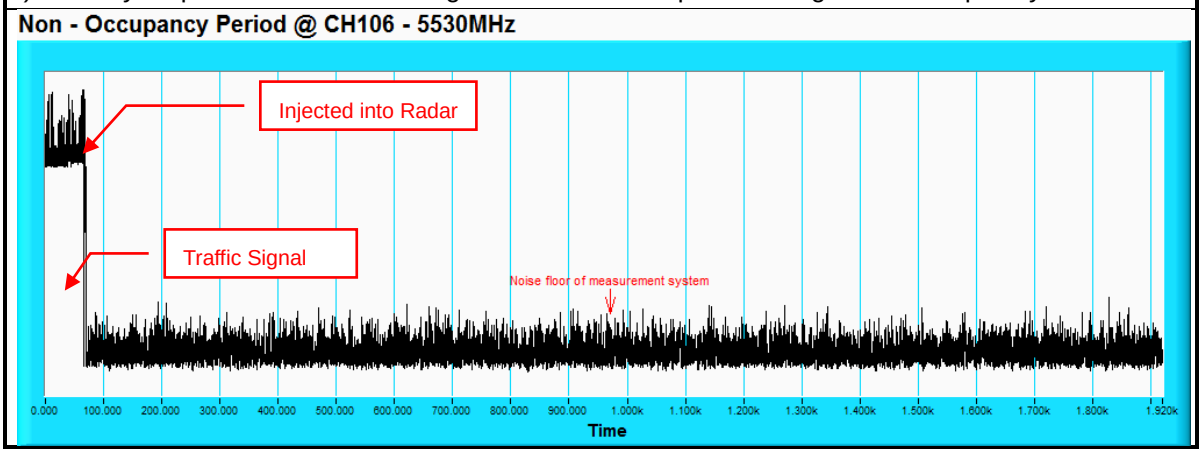

6.2.4 Non-Associated Test

Master was off.
During the 30 minutes observation time, The UUT did not make any transmissions in the DFS band after UUT power up.

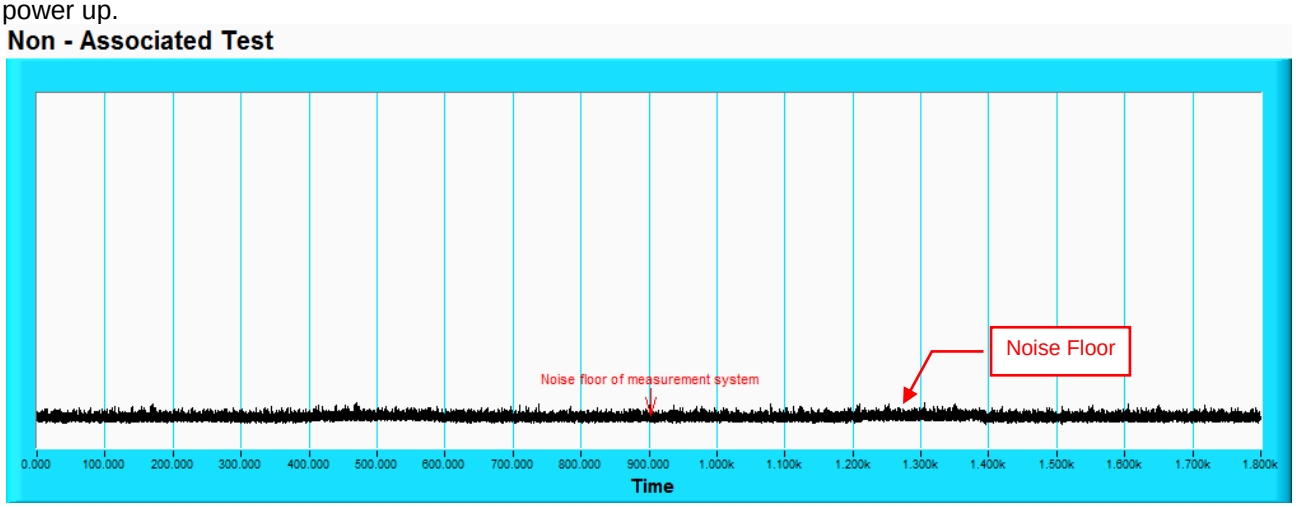

6.2.5 Non- Co-Channel Test

The UUT was investigated after radar was detected the channel and made sure no co-channel operation with radars.

7. Information on the Testing Laboratories

We, Bureau Veritas Consumer Products Services (H.K.) Ltd., Taoyuan Branch, were founded in 1988 to provide our best service in EMC, Radio, Telecom and Safety consultation. Our laboratories are accredited and approved according to ISO/IEC 17025.

If you have any comments, please feel free to contact us at the following:

Linko EMC/RF Lab:
Tel: 886-2-26052180
Fax: 886-2-26051924

Hsin Chu EMC/RF/Telecom Lab:
Tel: 886-3-6668565
Fax: 886-3-6668323

Hwa Ya EMC/RF/Safety Lab:
Tel: 886-3-3183232
Fax: 886-3-3270892

Email: service.adt@tw.bureauveritas.com
Web Site: www.bureauveritas-adt.com

The address and road map of all our labs can be found in our web site also.

8. APPENDIX-A

NON BEACON ON DFS BAND

1) Test results demonstrating no any beacon on DFS band after power up.
2) Observation time is 10min after power up.

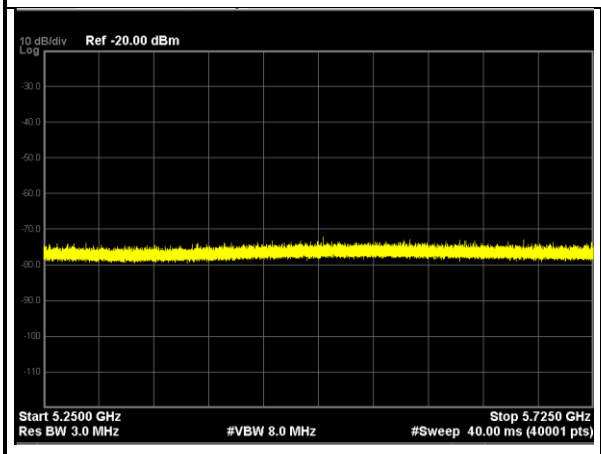

Client (UUT) no transmit on 802.11ac (VHT20) mode

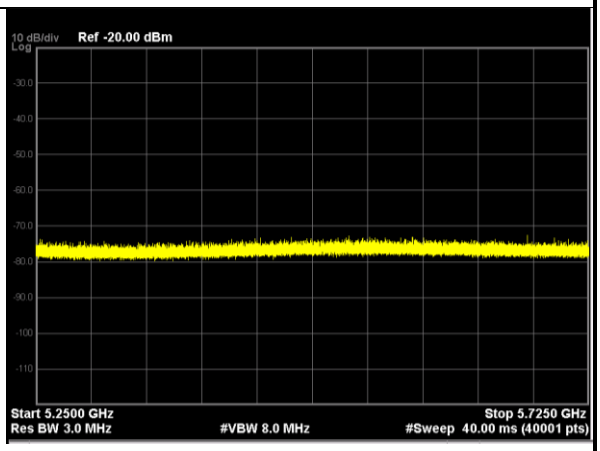

Client (UUT) no transmit on 802.11ac (VHT40) mode

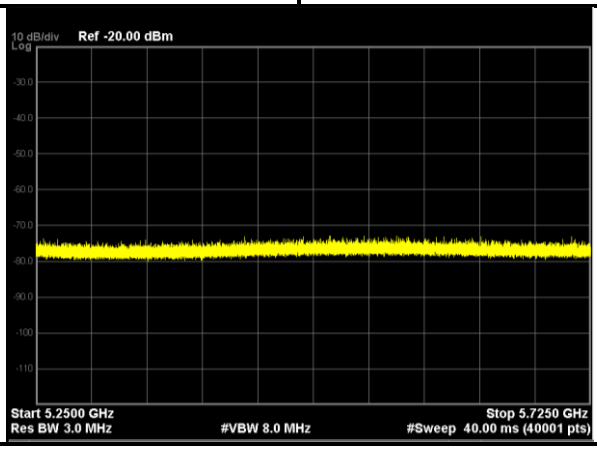

Client (UUT) no transmit on 802.11ac (VHT80) mode

--- END ---