FCC Certification Test Report

Report No.: FC170619E06

Test Model: S-00167

Received Date: June 19, 2017

Test Date: June 27 to 28, 2017

Issued Date: July 11, 2017

Applicant: LOGITECH FAR EAST LTD.

Address: #2 Creation Rd. 4, Science-Based Ind. Park Hsinchu Taiwan, R.O.C.

Issued By: Bureau Veritas Consumer Products Services (H.K.) Ltd., Taoyuan Branch Hsin Chu Laboratory

Lab Address: E-2, No.1, Li Hsin 1st Road, Hsinchu Science Park, Hsinchu City 300, Taiwan R.O.C.

Test Location (1): E-2, No.1, Li Hsin 1st Road, Hsinchu Science Park, Hsinchu City 300, Taiwan R.O.C.

Test Location (2): No. 49, Ln. 206, Wende Rd., Shangshan Tsuen, Chiung Lin Hsiang, Hsin Chu Hsien 307, Taiwan R.O.C.

Testing Laboratory
2022

This report is for your exclusive use. Any copying or replication of this report to or for any other person or entity, or use of our name or trademark, is permitted only with our prior written permission. This report sets forth our findings solely with respect to the test samples identified herein. The results set forth in this report are not indicative or representative of the quality or characteristics of the lot from which a test sample was taken or any similar or identical product unless specifically and expressly noted. Our report includes all of the tests requested by you and the results thereof based upon the information that you provided to us. You have 60 days from date of issuance of this report to notify us of any material error or omission caused by our negligence, provided, however, that such notice shall be in writing and shall specifically address the issue you wish to raise. A failure to raise such issue within the prescribed time shall constitute your unqualified acceptance of the completeness of this report, the tests conducted and the correctness of the report contents. Unless specific mention, the uncertainty of measurement has been explicitly taken into account to declare the compliance or non-compliance to the specification..
The report must not be used by the client to claim product certification, approval, or endorsement by TAF or any government agencies.

Table of Contents

Release Control Record 3

1 Certificate of Conformity 4

2 Summary of Test Results 5

2.1 Measurement Uncertainty 5
2.2 Modification Record 5

3 General Information 6

3.1 Features of EUT 6
3.2 General Description of EUT 6
3.3 Operating Modes of EUT and Determination of Worst Case Operating Mode 7
3.4 Test Program Used and Operation Descriptions 8
3.5 Primary Clock Frequencies of Internal Source 8
3.6 Miscellaneous 9

4 Configuration and Connections with EUT 10

4.1 Connection Diagram of EUT and Peripheral Devices 10
4.2 Configuration of Peripheral Devices and Cable Connections 11

5 Conducted Emissions at Mains Ports 12

5.1 Limits 12
5.2 Test Instruments 12
5.3 Test Arrangement 13
5.4 Supplementary Information 13
5.5 Test Results (Mode 1) 14
5.6 Test Results (Mode 2) 16

6 Radiated Emissions up to 1 GHz 18

6.1 Limits 18
6.2 Test Instruments 19
6.3 Test Arrangement 20
6.4 Supplementary Information 20
6.5 Test Results 21

7 Radiated Emissions above 1 GHz 23

7.1 Limits 23
7.2 Test Instruments 24
7.3 Test Arrangement 25
7.4 Supplementary Information 25
7.5 Test Results 26

8 Pictures of Test Arrangements 28

Appendix – Information on the Testing Laboratories 29

Release Control Record

Issue No.	Description	Date Issued
FC170619E06	Original release.	July 11, 2017

1 Certificate of Conformity

Product: Bluetooth Speaker

Brand: Logitech

Test Model: S-00167

Sample Status: ENGINEERING SAMPLE

Applicant: LOGITECH FAR EAST LTD.

Test Date: June 27 to 28, 2017

Standards: 47 CFR FCC Part 15, Subpart B, Class B
ICES-003:2016 Issue 6, Class B
ANSI C63.4:2014

The above equipment has been tested by **Bureau Veritas Consumer Products Services (H.K.) Ltd., Taoyuan Branch**, and found compliance with the requirement of the above standards. The test record, data evaluation & Equipment Under Test (EUT) configurations represented herein are true and accurate accounts of the measurements of the sample's EMC characteristics under the conditions specified in this report.

Prepared by : Nico Liu , **Date:** July 11, 2017

Nico Liu / Specialist

Approved by : , **Date:** July 11, 2017

Ken Lu / Manager

2 Summary of Test Results

47 CFR FCC Part 15: 2015, Subpart B , Class B/ ICES-003:2016 Issue 6, Class ANSI C63.4:2014				
FCC Clause	ICES-003 Clause	Test Item	Result/Remarks	Verdict
15.107	6.1	AC Power Line Conducted Emissions	Minimum passing Class B margin is -17.47 dB at 0.76719 MHz	Pass
15.109	6.2.1	Radiated Emissions up to 1 GHz	Minimum passing Class B margin is -4.55 dB at 98.31 MHz	Pass
	6.2.2	Radiated Emissions above 1 GHz	Minimum passing Class B margin is -15.43 dB at 1947.25 MHz	Pass

Note: There is no deviation to the applied test methods and requirements covered by the scope of this report.

2.1 Measurement Uncertainty

Where relevant, the following measurement uncertainty levels have been estimated for tests performed on the EUT:

The listed uncertainties are the worst case uncertainty for the entire range of measurement. Please note that the uncertainty values are provided for informational purposes only and are not used in determining the PASS/FAIL results.

Measurement	Frequency	Expanded Uncertainty (k=2) (±)
Conducted Emissions at mains ports	150kHz ~ 30MHz	1.84 dB
Radiated Emissions up to 1 GHz	30MHz ~ 1GHz	3.91 dB
Radiated Emissions above 1 GHz	1GHz ~ 6GHz	4.73 dB
	6GHz ~ 18GHz	5.24 dB
	18GHz ~40GHz	5.25 dB

2.2 Modification Record

There were no modifications required for compliance.

3 General Information

3.1 Features of EUT

The tests reported herein were performed according to the method specified by LOGITECH FAR EAST LTD., for detailed feature description, please refer to the manufacturer's specifications or user's manual.

3.2 General Description of EUT

Product	Bluetooth Speaker
Brand	Logitech
Test Model	S-00167
Status of EUT	ENGINEERING SAMPLE
Power Supply Rating	DC 12V from power adapter
Antenna Type	Refer to Note
Antenna Connector	Refer to Note
Accessory Device	Adapter x 1
Data Cable Supplied	Audio Cable Cable (shielded, 1.5m) x 1

Note:

1. The EUT may have a lot of colors for marketing requirement.
2. The EUT must be supplied with a power adapter and following different models could be chosen as following table:

Brand	Model No.	Spec.
AQUIL STAR PRECISION	ASSA67W-120200	Input: 100-240Vac, 50/60Hz, 0.8A Output: 12Vdc, 2A DC output cable: 1.8m, unshielded
	ASSA67A-120200	Input: 100-240Vac, 50/60Hz, 0.8A Output: 12Vdc, 2A DC output cable: 1.8m, unshielded

3. The antenna provided to the EUT, please refer to the following table:

Brand	Model	Antenna Gain (dBi)	Frequency range(GHz)	Antenna Type	Connecter Type	Cable Length
NA	NA	0.05	2.4-2.4835	Dipole antenna	i-pex	NA

4. The above EUT information is declared by manufacturer and for more detailed features description, please refer to the manufacturer's specifications or User's Manua

3.3 Operating Modes of EUT and Determination of Worst Case Operating Mode

The EUT is designed with AC power of rating 100-240Vac, 50/60Hz.

For radiated emission test, the EUT has been pre-tested under following test modes, and test modes D was the worst case for final test.

Mode	Test Condition			
	Radiated emission test			
	Adapter Model	Input	Output	remark
A	ASSA67A-120200	BT IN	Spearker	Normal Operation
B	ASSA67A-120200	PC In	Spearker	Normal Operation
C	ASSA67A-120200	AUX IN	Spearker	Normal Operation
D	**ASSA67A-120200**	**PC In**	**Earphone**	**Normal Operation**
E	ASSA67W-120200	PC In	Earphone	Normal Operation

Test modes are presented in the report as below.

Mode	Test Condition			
	Radiated emission test			
	Adapter Model	Input	Output	remark
1	ASSA67A-120200	PC In	Earphone	Normal Operation

Mode	Test Condition		
	Conducted emission test		
	Adapter Model	Input	Output
1	ASSA67W-120200	PC In	Earphone
2	ASSA67A-120200	PC In	Earphone

3.4 Test Program Used and Operation Descriptions

For Conducted / Radiated Tests for Other
1. Turn on the power of all equipment.
2. Support unit B (Laptop) runs "media player.exe" program to plays music to Support unit A (Earphone) via EUT.
3. Support unit A (Laptop) runs” EMC test.exe” then sends "H" messages to itself.

For Harmonics / Flicker / Immunity (Mode1) Tests
1. Turn on the power of all equipment.
2. Support unit B (Laptop) runs "media player.exe" program to plays music to EUT via BT link.

For Harmonics / Flicker / Immunity (Mode2) Tests
1. Turn on the power of all equipment.
2. Support unit B (Laptop) runs "media player.exe" program to plays music to Support unit A (Earphone) via EUT

3.5 Primary Clock Frequencies of Internal Source

The EUT is Bluetooth device, provided by LOGITECH FAR EAST LTD., for detailed internal source, please refer to the manufacturer's specifications.

3.6 Miscellaneous

Labelling Requirements for Part 15 Devices:

➢ Verification

The specific labelling requirements for a device subject to the Verification procedure are contained in Section 15.19(a). These labelling requirements are:

If the device is subject only to Verification, include a label bearing a unique identifier (Section 2.954) and one of three compliance statements specified in Section 15.19(a). If the labeling area for the device is so small, and/or it is not practical to place the compliance statement on the device, then the statement can be placed in the user manual or product packaging (Section 15.19(a)(5)). However, the device must still be labelled with the unique identifier (Verification). Generally, devices smaller than the palm of the hand are considered too small for the compliance statement.

➢ Certification

If the device is subject to Certification: (1) Section 2.925 contains information on identification of the equipment; (2) include a label bearing an FCC Identifier (FCC ID) (Section 2.926) and (3) include the appropriate compliance statement in Section 15.19(a). If the device is considered too small and therefore it is impractical (smaller than the palm of the hand) to display the compliance statement, then the statement may be placed in the user manual or product packaging. However, the device must still be labelled with the FCC ID. If the device is unquestionably too small for the FCC ID to be readable (smaller than 4-6 points), the FCC ID may be placed in the user manual. However, it must be determined that the device itself is too small – the label area allocated to the FCC ID may not be reduced because of over crowded identification of other product and regulatory information.

An electronic display of the FCC ID (see 9. Electronic Labelling below) may be used for Certification of Section 15.212 modular transmitters and software defined radios (Section 2.944).

➢ Declaration of Conformity (DoC):

The labelling requirements for a device subject to the DoC procedure are specified in Section 15.19(b). The label should include the FCC logo along with the Trade Name and Model Number, which satisfies the unique identifier requirement of Section 2.1074 if it represents the identical equipment tested for DoC compliance. For personal computers assembled from authorized components, the following additional text must also be included: “Assembled from tested components,” “Complete system not tested.” When the device is so small and/or when it is not practical to place the required additional text on the device, the text may be placed in the user manual or pamphlet supplied to the user. However, the FCC logo, Trade Name, and Model Number must still be displayed on the device (Section 15.19(b)(3)).

Part 15 Declaration of Conformity (DoC) Label Examples

Equipment certified as software defined radio may use a means that readily displays the FCC ID on an electronic display screen, instead of labelling the device (Section 2.925 (e)).

Further information may refer to FCC KDB:784748 D01 Labelling Part 15 &18 Guidelines

Labelling Requirements for ICES-003 Devices:

➢ Industry Canada ICES-003 Compliance Label:

CAN ICES-3 (*)/NMB-3(*)

* Insert either “A” or “B” but not both to identify the applicable Class of ITE.

4 Configuration and Connections with EUT

4.1 Connection Diagram of EUT and Peripheral Devices

For Conducted / Radiated Tests

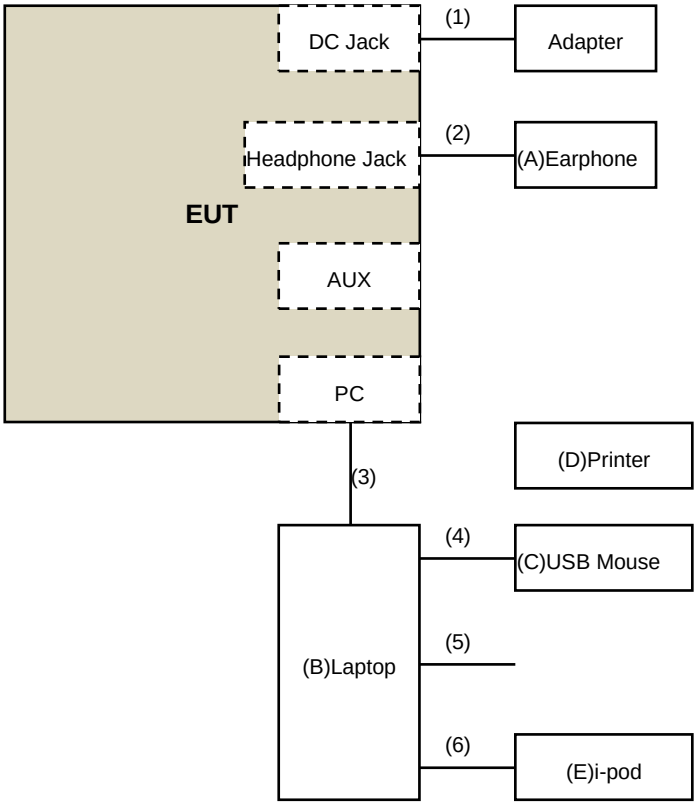

4.2 Configuration of Peripheral Devices and Cable Connections

ID	Product	Brand	Model No.	Serial No.	FCC ID	Remarks
A	Earphone	Hawk	HKC920	H003	FCC DoC	Provided by Lab
B	Laptop	DELL	PP27L	6YLB32S	FCC DoC	Provided by Lab
	Laptop	DELL	Latitude E5440	519OP32	FCC DoC	Provided by Lab
C	USB Mouse	DELL	MOC5UO	l1401MMP	FCC DoC	Provided by Lab
D	Printer	EPSON	LQ-300+II	G88Y074083	FCC DoC	Provided by Lab
E	i-pod	Apple	MD778TA/A	CC4JMFL0F4T1	FCC DoC	Provided by Lab

1. All power cords of the above support units are non-shielded (1.8m).

ID	Descriptions	Qty.	Length (m)	Shielding (Yes/No)	Cores (Qty.)	Remarks
1	DC Power Cable	1	1.8	No	0	Supplied by client
2	Audio Cable	1	0.8	No	0	Provided by Lab
3	Audio Cable	1	1.5	No	0	Supplied by client
4	USB Cable	1	1.8	Yes	0	Provided by Lab
5	USB Cable	1	1.8	Yes	0	Provided by Lab
6	USB Cable	1	0.1	Yes	0	Provided by Lab

5 Conducted Emissions at Mains Ports

5.1 Limits

Frequency (MHz)	Class A (dBuV)		Class B (dBuV)	
	Quasi-peak	Average	Quasi-peak	Average
0.15 - 0.5	79	66	66 - 56	56 - 46
0.50 - 5.0	73	60	56	46
5.0 - 30.0	73	60	60	50

Notes: 1. The lower limit shall apply at the transition frequencies.
2. The limit decreases linearly with the logarithm of the frequency in the range of 0.15 to 0.50 MHz.

5.2 Test Instruments

DESCRIPTION & MANUFACTURER	MODEL NO.	SERIAL NO.	CALIBRATED DATE	CALIBRATED UNTIL
Test Receiver R&S	ESCS 30	100375	May. 09, 2017	May. 08, 2018
Line-Impedance Stabilization Network (for EUT) SCHWARZBECK	NSLK-8127	8127-522	Aug. 31, 2016	Aug. 30, 2017
Line-Impedance Stabilization Network (for Peripheral) R&S	ENV216	100072	June 03, 2017	June 02, 2018
RF Cable	5D-FB	COACAB-002	Mar. 03, 2017	Mar. 02, 2018
10 dB PAD Mini-Circuits	HAT-10+	CONATT-003	Sep. 13, 2016	Sep. 12, 2017
50 ohms Terminator	N/A	EMC-03	Sep. 29, 2016	Sep. 28, 2017
50 ohms Terminator	N/A	EMC-02	Sep. 29, 2016	Sep. 28, 2017
Software BVADT	BVADT_Cond_ V7.3.7.4	NA	NA	NA

Note:

1. The calibration interval of the above test instruments are 12 months and the calibrations are traceable to NML/ROC and NIST/USA.
2. The test was performed in Shielded Room No. C.
3 The VCCI Con C Registration No. is C-3611.
4 Tested Date:June 28, 2017

5.3 Test Arrangement

a. The EUT was placed 0.4 meters from the conducting wall of the shielded room with EUT being connected to the power mains through a line impedance stabilization network (LISN). Other support units were connected to the power mains through another LISN. The two LISNs provide 50 Ohm/ 50uH of coupling impedance for the measuring instrument.

b. Both lines of the power mains connected to the EUT were checked for maximum conducted interference.

c. The test results of conducted emissions at mains ports are recorded of six worst margins for quasi-peak (mandatory) [and average (if necessary)] values against the limits at frequencies of interest unless the margin is 20 dB or greater.

Note: The resolution bandwidth and video bandwidth of test receiver is 9kHz for quasi-peak detection (QP) and average detection (AV) at frequency 0.15MHz-30MHz.

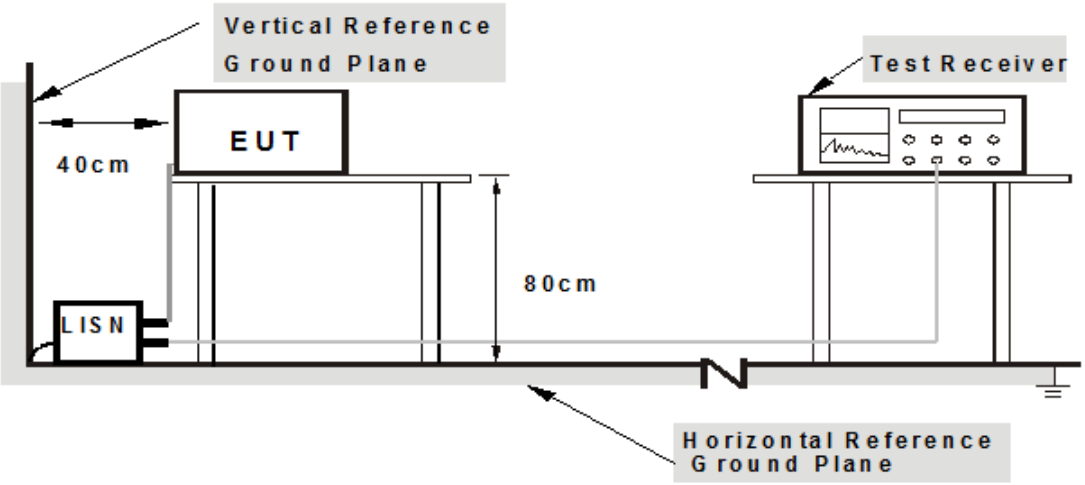

Note: 1.Support units were connected to second LISN.

For the actual test configuration, please refer to the related Item – Photographs of the Test Configuration.

5.4 Supplementary Information

There is not any deviation from the test standards for the test method.

5.5 Test Results (Mode 1)

Frequency Range	150kHz ~ 30MHz	**Detector Function & Resolution Bandwidth**	Quasi-Peak (QP) / Average (AV), 9kHz
Input Power	120Vac, 60Hz	**Environmental Conditions**	27℃, 63%RH
Tested by	Wythe Lin		
Test Mode	Mode 1		

Phase Of Power : Line (L)										
No	**Frequency (MHz)**	**Correction Factor (dB)**	**Reading Value (dBuV)**		**Emission Level (dBuV)**		**Limit (dBuV)**		**Margin (dB)**	
			Q.P.	**AV.**	**Q.P.**	**AV.**	**Q.P.**	**AV.**	**Q.P.**	**AV.**
1	0.15000	10.24	29.02	15.35	39.26	25.59	66.00	56.00	-26.74	-30.41
2	0.19687	10.25	23.91	11.19	34.16	21.44	63.74	53.74	-29.58	-32.30
3	0.31797	10.25	16.92	2.56	27.17	12.81	59.76	49.76	-32.59	-36.95
4	0.55625	10.26	27.47	17.98	37.73	28.24	56.00	46.00	-18.27	-17.76
5	**0.76719**	**10.28**	**21.54**	**18.25**	**31.82**	**28.53**	**56.00**	**46.00**	**-24.18**	**-17.47**
6	10.75391	10.85	20.03	17.29	30.88	28.14	60.00	50.00	-29.12	-21.86

Remarks:

1. Q.P. and AV. are abbreviations of quasi-peak and average individually.
2. The emission levels of other frequencies were very low against the limit.
3. Margin value = Emission level – Limit value
4. Correction factor = Insertion loss + Cable loss
5. Emission Level = Correction Factor + Reading Value

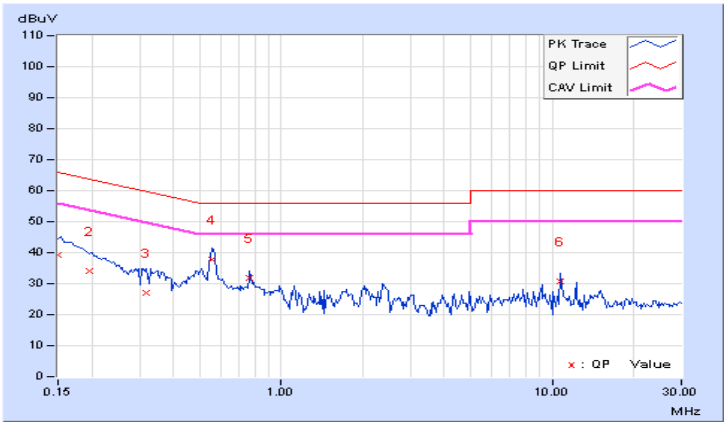

Frequency Range	150kHz ~ 30MHz	**Detector Function & Resolution Bandwidth**	Quasi-Peak (QP) / Average (AV), 9kHz
Input Power	120Vac, 60Hz	**Environmental Conditions**	27℃, 63%RH
Tested by	Wythe Lin		
Test Mode	Mode 1		

Phase Of Power : Neutral (N)										
No	**Frequency (MHz)**	**Correction Factor (dB)**	**Reading Value (dBuV)**		**Emission Level (dBuV)**		**Limit (dBuV)**		**Margin (dB)**	
			Q.P.	**AV.**	**Q.P.**	**AV.**	**Q.P.**	**AV.**	**Q.P.**	**AV.**
1	0.15000	10.28	29.60	9.47	39.88	19.75	66.00	56.00	-26.12	-36.25
2	0.17734	10.24	26.41	6.21	36.65	16.45	64.61	54.61	-27.96	-38.16
3	0.22812	10.23	22.79	5.17	33.02	15.40	62.52	52.52	-29.50	-37.12
4	0.26719	10.25	19.22	2.48	29.47	12.73	61.20	51.20	-31.73	-38.47
5	0.55625	10.35	23.11	13.15	33.46	23.50	56.00	46.00	-22.54	-22.50
6	12.28906	11.00	20.17	18.00	31.17	29.00	60.00	50.00	-28.83	-21.00

Remarks:

1. Q.P. and AV. are abbreviations of quasi-peak and average individually.
2. The emission levels of other frequencies were very low against the limit.
3. Margin value = Emission level – Limit value
4. Correction factor = Insertion loss + Cable loss
5. Emission Level = Correction Factor + Reading Value

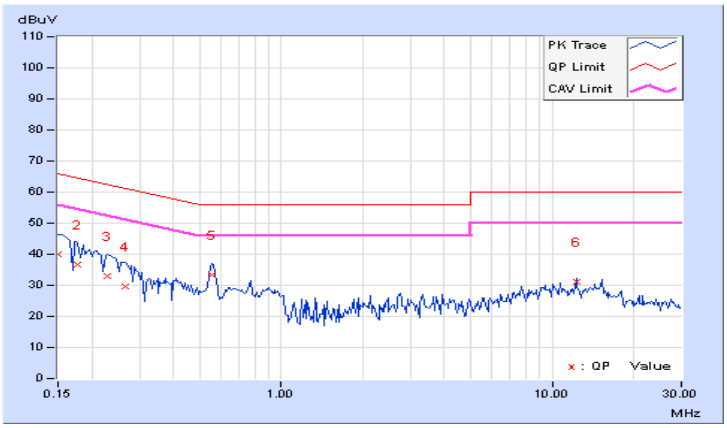

5.6 Test Results (Mode 2)

Frequency Range	150kHz ~ 30MHz	**Detector Function & Resolution Bandwidth**	Quasi-Peak (QP) / Average (AV), 9kHz
Input Power	120Vac, 60Hz	**Environmental Conditions**	27℃, 63%RH
Tested by	Wythe Lin		
Test Mode	Mode 2		

Phase Of Power : Line (L)										
No	**Frequency (MHz)**	**Correction Factor (dB)**	**Reading Value (dBuV)**		**Emission Level (dBuV)**		**Limit (dBuV)**		**Margin (dB)**	
			Q.P.	**AV.**	**Q.P.**	**AV.**	**Q.P.**	**AV.**	**Q.P.**	**AV.**
1	0.15000	10.24	26.70	16.77	36.94	27.01	66.00	56.00	-29.06	-28.99
2	0.20078	10.25	21.53	12.13	31.78	22.38	63.58	53.58	-31.80	-31.20
3	0.53672	10.26	25.99	18.22	36.25	28.48	56.00	46.00	-19.75	-17.52
4	0.76719	10.28	22.96	18.19	33.24	28.47	56.00	46.00	-22.76	-17.53
5	10.75000	10.85	21.04	16.23	31.89	27.08	60.00	50.00	-28.11	-22.92
6	12.28906	10.94	22.37	18.80	33.31	29.74	60.00	50.00	-26.69	-20.26

Remarks:

1. Q.P. and AV. are abbreviations of quasi-peak and average individually.
2. The emission levels of other frequencies were very low against the limit.
3. Margin value = Emission level – Limit value
4. Correction factor = Insertion loss + Cable loss
5. Emission Level = Correction Factor + Reading Value

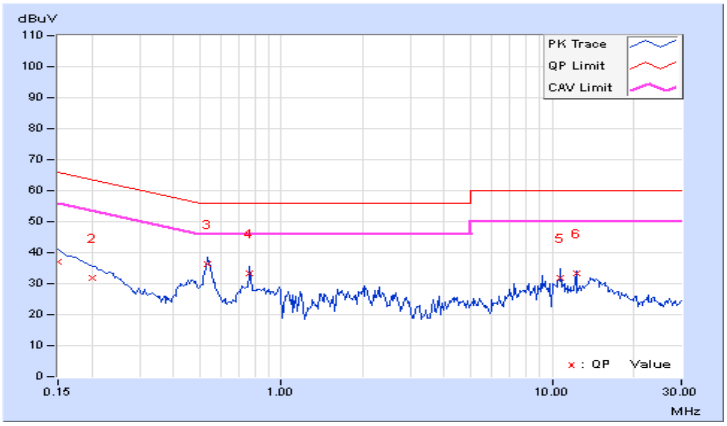

Frequency Range	150kHz ~ 30MHz	**Detector Function & Resolution Bandwidth**	Quasi-Peak (QP) / Average (AV), 9kHz
Input Power	120Vac, 60Hz	**Environmental Conditions**	27℃, 63%RH
Tested by	Wythe Lin		
Test Mode	Mode 2		

Phase Of Power : Neutral (N)										
No	**Frequency (MHz)**	**Correction Factor (dB)**	**Reading Value (dBuV)**		**Emission Level (dBuV)**		**Limit (dBuV)**		**Margin (dB)**	
			Q.P.	**AV.**	**Q.P.**	**AV.**	**Q.P.**	**AV.**	**Q.P.**	**AV.**
1	0.15000	10.28	26.78	10.96	37.06	21.24	66.00	56.00	-28.94	-34.76
2	0.18906	10.23	22.85	7.99	33.08	18.22	64.08	54.08	-31.00	-35.86
3	0.45469	10.32	12.22	2.47	22.54	12.79	56.79	46.79	-34.25	-34.00
4	0.53281	10.34	17.54	11.69	27.88	22.03	56.00	46.00	-28.12	-23.97
5	0.76719	10.40	18.11	11.46	28.51	21.86	56.00	46.00	-27.49	-24.14
6	12.28906	11.00	22.03	18.58	33.03	29.58	60.00	50.00	-26.97	-20.42

Remarks:

1. Q.P. and AV. are abbreviations of quasi-peak and average individually.
2. The emission levels of other frequencies were very low against the limit.
3. Margin value = Emission level – Limit value
4. Correction factor = Insertion loss + Cable loss
5. Emission Level = Correction Factor + Reading Value

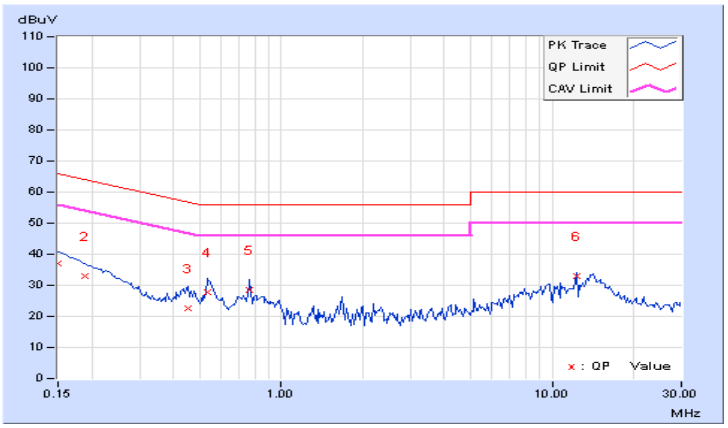

6 Radiated Emissions up to 1 GHz

6.1 Limits

Emissions radiated outside of the specified bands, shall be according to the general radiated limits as following:

Radiated Emissions Limits at 10 meters (dBµV/m)				
Frequencies (MHz)	FCC 15B / ICES-003, Class A	FCC 15B / ICES-003, Class B	CISPR 22, Class A	CISPR 22, Class B
30-88	39	29.5	40	30
88-216	43.5	33.1		
216-230	46.4	35.6		
230-960			47	37
960-1000	49.5	43.5		

Radiated Emissions Limits at 3 meters (dBµV/m)				
Frequencies (MHz)	FCC 15B / ICES-003, Class A	FCC 15B / ICES-003, Class B	CISPR 22, Class A	CISPR 22, Class B
30-88	49.5	40	50.5	40.5
88-216	54	43.5		
216-230	56.9	46		
230-960			57.5	47.5
960-1000	60	54		

Notes:
1. The lower limit shall apply at the transition frequencies.
2. Emission level (dBuV/m) = 20 log Emission level (uV/m).
3. QP detector shall be applied if not specified.

6.2 Test Instruments

DESCRIPTION & MANUFACTURER	MODEL NO.	SERIAL NO.	CALIBRATED DATE	CALIBRATED UNTIL
Test Receiver Agilent	N9038A	MY50010125	Apr. 15, 2017	Apr. 14, 2018
	N9038A	MY50010132	June. 16, 2017	June. 15, 2018
Pre-Amplifier Sonoma	310N	352925	Aug. 29, 2016	Aug. 28, 2017
	310N	352926	Aug. 29, 2016	Aug. 28, 2017
Trilog Broadband Antenna SCHWARZBECK	VULB 9168	9168-359	Dec. 28, 2016	Dec. 27, 2017
	VULB 9168	9168-358	Dec. 16, 2016	Dec. 15, 2017
Fixed attenuator Mini-Circuits	UNAT-5+	CHF-001	Sep. 9, 2016	Sep. 08, 2017
	UNAT-5+	CHF-002	Sep. 9, 2016	Sep. 08, 2017
RF Cable	8D-FB	CHFCAB-001-1 CHFCAB-001-3 CHFCAB-001-4	Sep. 22, 2016	Sep. 21, 2017
		CHFCAB-002-1 CHFCAB-002-3 CHFCAB-002-4	Sep. 22, 2016	Sep. 21, 2017
Software BVADT	ADT_Radiated_V 8.7.08	NA	NA	NA
Antenna Tower & Turn Table CT	NA	NA	NA	NA

Note:

1. The calibration interval of the above test instruments are 12 months and the calibrations are traceable to NML/ROC and NIST/USA.
2. The test was performed in 10m Chamber No. F.
3. The FCC Site Registration No. is 928149.
4. The VCCI Site Registration No. is R-3252.
5. The CANADA Site Registration No. is IC 7450H-1.
6. Tested Date:June 27, 2017

6.3 Test Arrangement

a. The EUT was placed on the top of a rotating table 0.8 meters above the ground at an accredited test facility. The table was rotated 360 degrees to determine the position of the highest radiation.
b. The EUT was set 10 meters away from the interference-receiving antenna, which was mounted on the top of a variable-height antenna tower.
c. The antenna is a broadband antenna, and its height is varied from one meter to four meters above the ground to determine the maximum value of the field strength. Both horizontal and vertical polarizations of the antenna are set to make the measurement.
d. For each suspected emission, the EUT was arranged to its worst case and then the antenna was tuned to heights from 1 meter to 4 meters and the rotatable table was turned from 0 degrees to 360 degrees to find the maximum reading.
e. The test-receiver system was set to quasi-peak detect function and specified bandwidth with maximum hold mode when the test frequency is up to 1 GHz.

Note: The resolution bandwidth and video bandwidth of test receiver/spectrum analyzer is 120kHz for quasi-peak detection (QP) at frequency up to 1GHz.

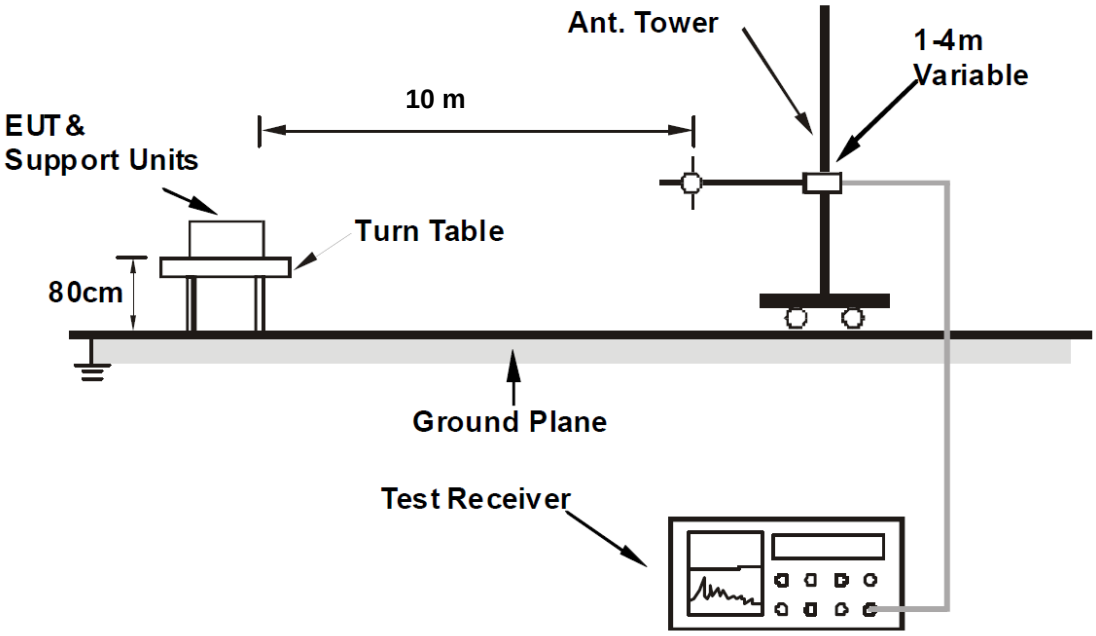

For the actual test configuration, please refer to the related Item – Photographs of the Test Configuration.

6.4 Supplementary Information

There is not any deviation from the test standards for the test method.

6.5 Test Results

Frequency Range	30MHz ~ 1GHz	Detector Function & Resolution Bandwidth	Quasi-Peak (QP), 120kHz
Input Power	120Vac, 60Hz	Environmental Conditions	25℃, 61%RH
Tested by	Mike Hsieh		
Test Mode	Mode 1		

Antenna Polarity & Test Distance : Horizontal at 10 m								
No	Frequency (MHz)	Emission Level (dBuV/m)	Limit (dBuV/m)	Margin (dB)	Antenna Height (m)	Table Angle (Degree)	Raw Value (dBuV)	Correction Factor (dB/m)
1	98.34	21.59 QP	30.00	-8.41	4.00 H	83	38.90	-17.31
2	196.65	23.02 QP	30.00	-6.98	3.00 H	45	38.30	-15.28
3	307.27	22.90 QP	37.00	-14.10	4.00 H	30	34.06	-11.16
4	380.07	27.66 QP	37.00	-9.34	3.00 H	354	37.02	-9.36
5	419.94	26.86 QP	37.00	-10.14	2.00 H	14	35.16	-8.30
6	921.60	27.62 QP	37.00	-9.38	1.00 H	22	25.96	1.66

Remarks:

1. Emission Level(dBuV/m) = Raw Value(dBuV) + Correction Factor(dB/m)
2. Correction Factor(dB/m) = Antenna Factor (dB/m) + Cable Factor (dB) – Pre-Amplifier Factor (dB)
3. The other emission levels were very low against the limit.
4. Margin value = Emission level – Limit value

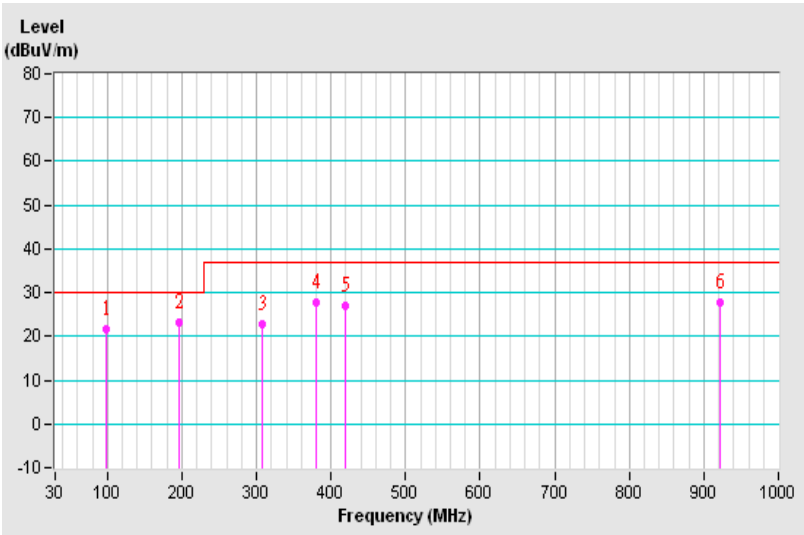

Frequency Range	30MHz ~ 1GHz	Detector Function & Resolution Bandwidth	Quasi-Peak (QP), 120kHz
Input Power	120Vac, 60Hz	Environmental Conditions	25℃, 61%RH
Tested by	Mike Hsieh		
Test Mode	Mode 1		

Antenna Polarity & Test Distance : Vertical at 10 m								
No	Frequency (MHz)	Emission Level (dBuV/m)	Limit (dBuV/m)	Margin (dB)	Antenna Height (m)	Table Angle (Degree)	Raw Value (dBuV)	Correction Factor (dB/m)
1	**98.31**	**25.45 QP**	**30.00**	**-4.55**	**2.00 V**	**217**	**42.89**	**-17.44**
2	167.67	23.19 QP	30.00	-6.81	2.00 V	348	35.88	-12.69
3	196.62	25.25 QP	30.00	-4.75	1.00 V	49	40.88	-15.63
4	280.02	28.94 QP	37.00	-8.06	1.00 V	9	40.81	-11.87
5	380.99	27.13 QP	37.00	-9.87	1.00 V	189	36.38	-9.25
6	460.03	27.14 QP	37.00	-9.86	2.00 V	348	34.21	-7.07

Remarks:

1. Emission Level(dBuV/m) = Raw Value(dBuV) + Correction Factor(dB/m)
2. Correction Factor(dB/m) = Antenna Factor (dB/m) + Cable Factor (dB) – Pre-Amplifier Factor (dB)
3. The other emission levels were very low against the limit.
4. Margin value = Emission level – Limit value

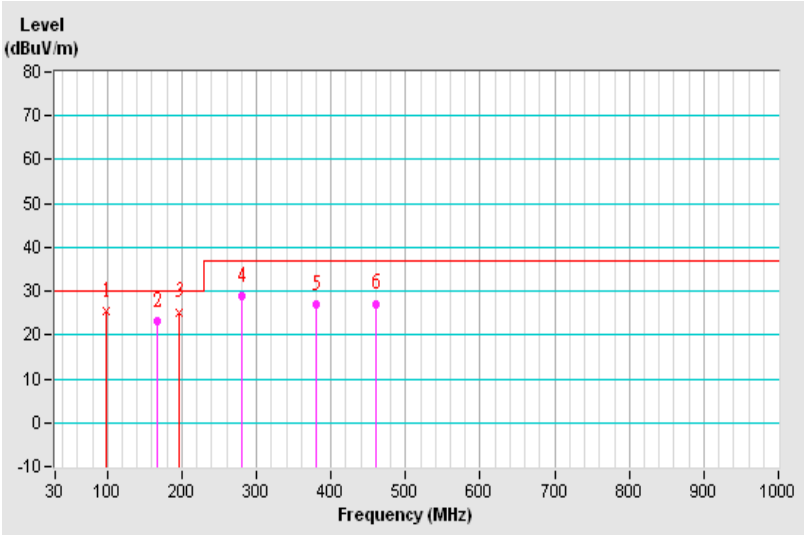

7 Radiated Emissions above 1 GHz

7.1 Limits

Emissions radiated outside of the specified bands, shall be according to the general radiated limits as following:

Radiated Emissions Limits at 10 meters (dBμV/m)				
Frequencies (MHz)	FCC 15B / ICES-003, Class A	FCC 15B / ICES-003, Class B	CISPR 22, Class A	CISPR 22, Class B
1000-3000	Avg: 49.5 Peak: 69.5	Avg: 43.5 Peak: 63.5	Not defined	Not defined
Above 3000			Not defined	Not defined

Radiated Emissions Limits at 3 meters (dBμV/m)				
Frequencies (MHz)	FCC 15B / ICES-003, Class A	FCC 15B / ICES-003, Class B	CISPR 22, Class A	CISPR 22, Class B
1000-3000	Avg: 60 Peak: 80	Avg: 54 Peak: 74	Avg: 56 Peak: 76	Avg: 50 Peak: 70
Above 3000			Avg: 60 Peak: 80	Avg: 54 Peak: 74

Notes:
1. The lower limit shall apply at the transition frequencies.
2. Emission level (dBuV/m) = 20 log Emission level (uV/m).
3. As shown in 15.35(b), for frequencies above 1000MHz, the field strength limits are based on average detector, however, the peak field strength of any emission shall not exceed the maximum permitted average limits, specified above by more than 20dB under any condition of modulation.

Frequency Range (For unintentional radiators)

Highest frequency generated or used in the device or on which the device operates or tunes (MHz)	Upper frequency of measurement range (MHz)
Below 1.705	30
1.705-108	1000
108-500	2000
500-1000	5000
Above 1000	5th harmonic of the highest frequency or 40GHz, whichever is lower

7.2 Test Instruments

DESCRIPTION & MANUFACTURER	MODEL NO.	SERIAL NO.	CALIBRATED DATE	CALIBRATED UNTIL
Test Receiver Agilent	N9038A	MY50010125	Apr. 15, 2017	Apr. 14, 2018
Pre-Amplifier Agilent	8449B	3008A01975	Feb. 26, 2017	Feb. 25, 2018
Horn Antenna SCHWARZBECK	BBHA 9120D	D123	Dec. 15, 2016	Dec. 14, 2017
RF Coaxial Cable	EMC104-SM-SM -11000	170209	Mar. 07, 2017	Mar. 06, 2018
RF Coaxial Cable	EMC104-SM-SM -6000	170207	Mar. 07, 2017	Mar. 06, 2018
RF Coaxial Cable	EMC104-SM-SM -2500	170206	Mar. 07, 2017	Mar. 06, 2018
Software BVADT	ADT_Radiated_ V8.7.08	NA	NA	NA
Antenna Tower & Turn Table CT	NA	NA	NA	NA

Note:

1. The calibration interval of the above test instruments are 12 months and the calibrations are traceable to NML/ROC and NIST/USA.
2. The test was performed in 10m Chamber No. F.
3. The VCCI Site Registration No. is G-136.
4. The 3dB beamwidth of the horn antenna is minimum 30 degree (or w = 1.6m at 3m distance) for 1~6 GHz.
5. Tested Date:June 27, 2017

7.3 Test Arrangement

a. The EUT was placed on the top of a rotating table 0.8 meters above the ground at an accredited chamber room. The table was rotated 360 degrees to determine the position of the highest radiation.
b. The EUT was set 3 meters away from the interference-receiving antenna, which was mounted on the top of a variable-height antenna tower.
c. The height of antenna can be varied from one meter to four meters, the height of adjustment depends on the EUT height and the antenna 3dB beamwidth both, to detect the maximum value of the field strength. Both horizontal and vertical polarizations of the antenna are set to make the measurement.
d. For each suspected emission, the EUT was arranged to its worst case and then the antenna was tuned to heights and the rotatable table was turned from 0 degrees to 360 degrees to find the maximum reading.
e. The spectrum analyzer system was set to peak and average detect function and specified bandwidth with maximum hold mode when the test frequency is above 1 GHz.

Note: The resolution bandwidth of test receiver/spectrum analyzer is 1MHz and video bandwidth is 3MHz for Peak detection (PK) at frequency above 1GHz. The resolution bandwidth of test receiver/spectrum analyzer is 1 MHz for Average detection (AV) at frequency above 1GHz.

< Frequency Range above 1GHz >

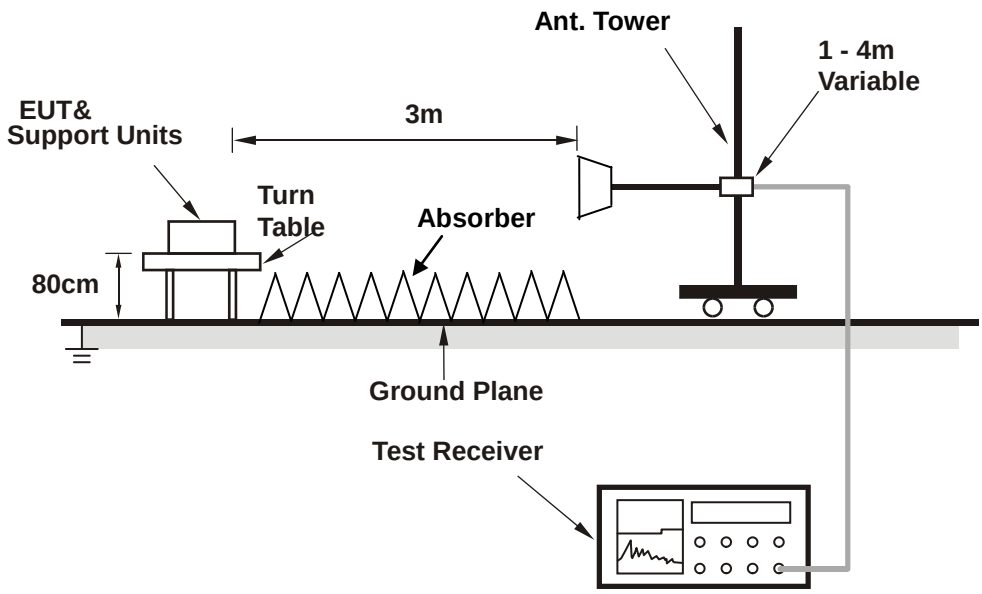

The test arrangement is in accordance with ANSI 63.4:2014. For the actual test configuration, please refer to the related item – Photographs of the Test Configuration.

7.4 Supplementary Information

There is not any deviation from the test standards for the test method.

7.5 Test Results

Frequency Range	1GHz~12.5GHz	Detector Function & Resolution Bandwidth	Peak (PK) / Average (AV), 1MHz
Input Power	120Vac, 60Hz	Environmental Conditions	22℃, 69%RH
Tested by	Mike Hsieh		
Test Mode	Mode 1		

Antenna Polarity & Test Distance : Horizontal at 3 m								
No	Frequency (MHz)	Emission Level (dBuV/m)	Limit (dBuV/m)	Margin (dB)	Antenna Height (m)	Table Angle (Degree)	Raw Value (dBuV)	Correction Factor (dB/m)
1	1237.37	36.50 PK	74.00	-37.50	1.00 H	126	41.98	-5.48
2	1237.37	23.12 AV	54.00	-30.88	1.00 H	126	28.60	-5.48
3	1766.62	40.82 PK	74.00	-33.18	1.00 H	129	43.92	-3.10
4	1766.62	23.27 AV	54.00	-30.73	1.00 H	129	26.37	-3.10
5	2467.00	40.90 PK	74.00	-33.10	1.00 H	324	40.69	0.21
6	2467.00	27.72 AV	54.00	-26.28	1.00 H	324	27.51	0.21
7	3676.62	41.54 PK	74.00	-32.46	1.00 H	194	37.80	3.74
8	3676.62	28.55 AV	54.00	-25.45	1.00 H	194	24.81	3.74
9	5089.75	44.51 PK	74.00	-29.49	1.00 H	152	36.59	7.92
10	5089.75	31.88 AV	54.00	-22.12	1.00 H	152	23.96	7.92
11	5755.25	45.68 PK	74.00	-28.32	1.00 H	120	36.61	9.07
12	5755.25	32.03 AV	54.00	-21.97	1.00 H	120	22.96	9.07

Remarks:

1. Emission Level(dBuV/m) = Raw Value(dBuV) + Correction Factor(dB/m)
2. Correction Factor(dB/m) = Antenna Factor (dB/m) + Cable Factor (dB) – Pre-Amplifier Factor (dB)
3. The other emission levels were very low against the limit.
4. Margin value = Emission level – Limit value

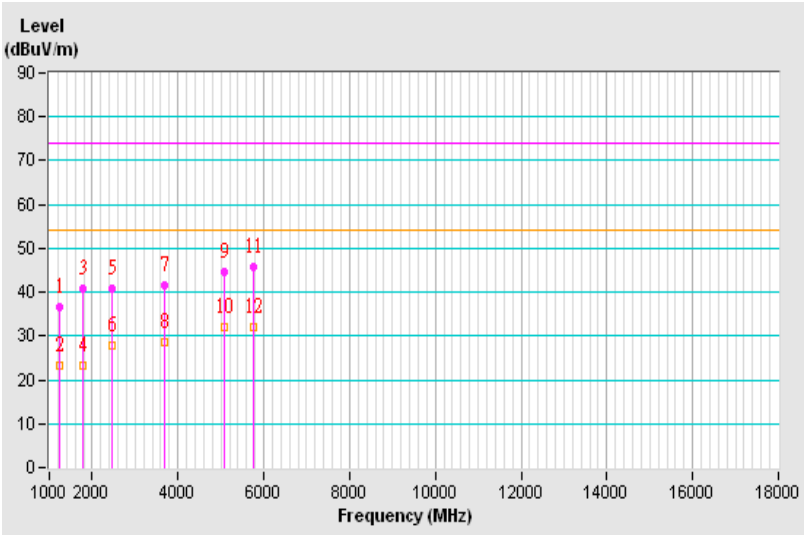

Frequency Range	1GHz~12.5GHz	Detector Function & Resolution Bandwidth	Peak (PK) / Average (AV), 1MHz
Input Power	120Vac, 60Hz	Environmental Conditions	22℃, 69%RH
Tested by	Mike Hsieh		
Test Mode	Mode 1		

Antenna Polarity & Test Distance : Vertical at 3 m								
No	Frequency (MHz)	Emission Level (dBuV/m)	Limit (dBuV/m)	Margin (dB)	Antenna Height (m)	Table Angle (Degree)	Raw Value (dBuV)	Correction Factor (dB/m)
1	1756.12	42.69 PK	74.00	-31.31	1.00 V	65	45.83	-3.14
2	1756.12	24.82 AV	54.00	-29.18	1.00 V	65	27.96	-3.14
3	1947.25	45.86 PK	74.00	-28.14	1.00 V	23	48.22	-2.36
4	**1947.25**	**38.57 AV**	**54.00**	**-15.43**	**1.00 V**	**23**	**40.93**	**-2.36**
5	2205.87	42.62 PK	74.00	-31.38	1.00 V	150	43.71	-1.09
6	2205.87	25.34 AV	54.00	-28.66	1.00 V	150	26.43	-1.09
7	3197.37	48.97 PK	74.00	-25.03	1.00 V	332	46.78	2.19
8	3197.37	27.53 AV	54.00	-26.47	1.00 V	332	25.34	2.19
9	4296.25	43.28 PK	74.00	-30.72	1.00 V	195	37.73	5.55
10	4296.25	30.05 AV	54.00	-23.95	1.00 V	195	24.50	5.55
11	5382.25	44.92 PK	74.00	-29.08	1.00 V	21	36.66	8.26
12	5382.25	31.47 AV	54.00	-22.53	1.00 V	21	23.21	8.26

Remarks:

1. Emission Level(dBuV/m) = Raw Value(dBuV) + Correction Factor(dB/m)
2. Correction Factor(dB/m) = Antenna Factor (dB/m) + Cable Factor (dB) – Pre-Amplifier Factor (dB)
3. The other emission levels were very low against the limit.
4. Margin value = Emission level – Limit value

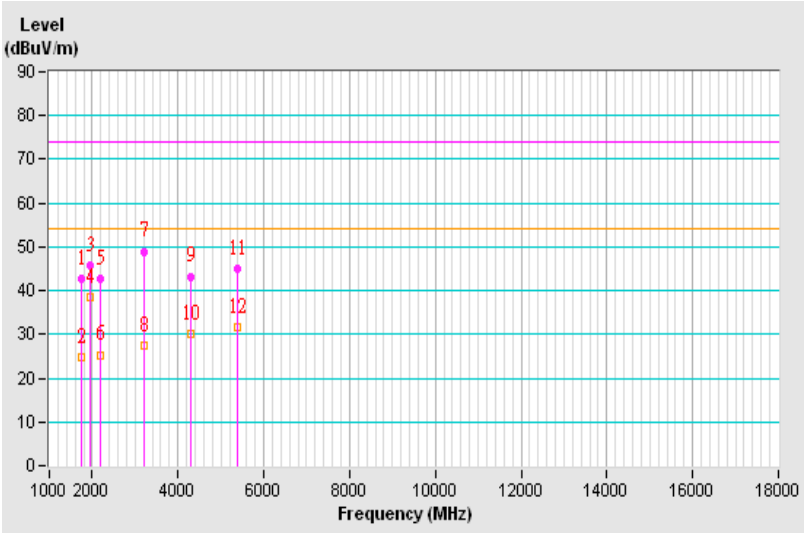

8 Pictures of Test Arrangements

Please refer to the attached file (Test Setup Photo).

Appendix – Information on the Testing Laboratories

We, Bureau Veritas Consumer Products Services (H.K.) Ltd., Taoyuan Branch, were founded in 1988 to provide our best service in EMC, Radio, Telecom and Safety consultation. Our laboratories are accredited and approved according to ISO/IEC 17025.

If you have any comments, please feel free to contact us at the following:

Linko EMC/RF Lab
Tel: 886-2-26052180
Fax: 886-2-26051924

Hsin Chu EMC/RF/Telecom Lab
Tel: 886-3-6668565
Fax: 886-3-6668323

Hwa Ya EMC/RF/Safety Lab
Tel: 886-3-3183232
Fax: 886-3-3270892

Email: service.adt@tw.bureauveritas.com
Web Site: www.bureauveritas-adt.com

The address and road map of all our labs can be found in our web site also.

--- END ---