**Calibration Laboratory of**
Schmid & Partner
Engineering AG
**Zeughausstrasse 43, 8004 Zurich, Switzerland**

S Schweizerischer Kalibrierdienst
C Service suisse d'étalonnage
Servizio svizzero di taratura
S Swiss Calibration Service

Accredited by the Swiss Accreditation Service (SAS)
**The Swiss Accreditation Service is one of the signatories to the EA Multilateral Agreement for the recognition of calibration certificates**

**Accreditation No.: SCS 0108**

**Client** **Dt&C**
**Gyeonggi-do, Republic of Korea**

**Certificate No.** **D2450V2-726_Jul23**

# CALIBRATION CERTIFICATE

| | |
|---|---|
| Object | D2450V2 - SN:726 |
| Calibration procedure(s) | QA CAL-05.v12<br>Calibration Procedure for SAR Validation Sources between 0.7-3 GHz |
| Calibration date: | July 19, 2023 |

This calibration certificate documents the traceability to national standards, which realize the physical units of measurements (SI). The measurements and the uncertainties with confidence probability are given on the following pages and are part of the certificate.

All calibrations have been conducted in the closed laboratory facility: environment temperature (22 ± 3)°C and humidity < 70%.

Calibration Equipment used (M&TE critical for calibration)

| Primary Standards | ID # | Cal Date (Certificate No.) | Scheduled Calibration |
|---|---|---|---|
| Power meter NRP2 | SN: 104778 | 30-Mar-23 (No. 217-03804/03805) | Mar-24 |
| Power sensor NRP-Z91 | SN: 103244 | 30-Mar-23 (No. 217-03804) | Mar-24 |
| Power sensor NRP-Z91 | SN: 103245 | 30-Mar-23 (No. 217-03805) | Mar-24 |
| Reference 20 dB Attenuator | SN: BH9394 (20k) | 30-Mar-23 (No. 217-03809) | Mar-24 |
| Type-N mismatch combination | SN: 310982 / 06327 | 30-Mar-23 (No. 217-03810) | Mar-24 |
| Reference Probe EX3DV4 | SN: 7349 | 10-Jan-23 (No. EX3-7349_Jan23) | Jan-24 |
| DAE4 | SN: 601 | 19-Dec-22 (No. DAE4-601_Dec22) | Dec-23 |

| Secondary Standards | ID # | Check Date (in house) | Scheduled Check |
|---|---|---|---|
| Power meter E4419B | SN: GB39512475 | 30-Oct-14 (in house check Oct-22) | In house check: Oct-24 |
| Power sensor HP 8481A | SN: US37292783 | 07-Oct-15 (in house check Oct-22) | In house check: Oct-24 |
| Power sensor HP 8481A | SN: MY41093315 | 07-Oct-15 (in house check Oct-22) | In house check: Oct-24 |
| RF generator R&S SMT-06 | SN: 100972 | 15-Jun-15 (in house check Oct-22) | In house check: Oct-24 |
| Network Analyzer Agilent E8358A | SN: US41080477 | 31-Mar-14 (in house check Oct-22) | In house check: Oct-24 |

| | Name | Function | Signature |
|---|---|---|---|
| Calibrated by: | Paulo Pina | Laboratory Technician | |
| Approved by: | Sven Kühn | Technical Manager | |

Issued: July 19, 2023

This calibration certificate shall not be reproduced except in full without written approval of the laboratory.



This test report is prohibited to copy or reissue in whole or in part without the approval of Dt&C Co., Ltd.

**Calibration Laboratory of**
Schmid & Partner
Engineering AG
**Zeughausstrasse 43, 8004 Zurich, Switzerland**

Accredited by the Swiss Accreditation Service (SAS)
**The Swiss Accreditation Service is one of the signatories to the EA Multilateral Agreement for the recognition of calibration certificates**

S Schweizerischer Kalibrierdienst
C Service suisse d'étalonnage
S Servizio svizzero di taratura
Swiss Calibration Service

Accreditation No.: **SCS 0108**

**Glossary:**

| | |
|---|---|
| TSL | tissue simulating liquid |
| ConvF | sensitivity in TSL / NORM x,y,z |
| N/A | not applicable or not measured |

**Calibration is Performed According to the Following Standards:**

a) IEC/IEEE 62209-1528, "Measurement Procedure For The Assessment Of Specific Absorption Rate Of Human Exposure To Radio Frequency Fields From Hand-Held And Body-Worn Wireless Communication Devices - Part 1528: Human Models, Instrumentation And Procedures (Frequency Range of 4 MHz to 10 GHz)", October 2020.
b) KDB 865664, "SAR Measurement Requirements for 100 MHz to 6 GHz"

**Additional Documentation:**

c) DASY System Handbook

**Methods Applied and Interpretation of Parameters:**

- *Measurement Conditions:* Further details are available from the Validation Report at the end of the certificate. All figures stated in the certificate are valid at the frequency indicated.
- *Antenna Parameters with TSL:* The source is mounted in a touch configuration below the center marking of the flat phantom.
- *Return Loss:* This parameter is measured with the source positioned under the liquid filled phantom (as described in the measurement condition clause). The Return Loss ensures low reflected power. No uncertainty required.
- *SAR measured:* SAR measured at the stated antenna input power.
- *SAR normalized:* SAR as measured, normalized to an input power of 1 W at the antenna connector.
- *SAR for nominal TSL parameters:* The measured TSL parameters are used to calculate the nominal SAR result.

The reported uncertainty of measurement is stated as the standard uncertainty of measurement multiplied by the coverage factor k=2, which for a normal distribution corresponds to a coverage probability of approximately 95%.



This test report is prohibited to copy or reissue in whole or in part without the approval of Dt&C Co., Ltd.

## Measurement Conditions

DASY system configuration, as far as not given on page 1.

| | | |
|---|---|---|
| **DASY Version** | DASY52 | V52.10.4 |
| **Extrapolation** | Advanced Extrapolation | |
| **Phantom** | Modular Flat Phantom | |
| **Distance Dipole Center - TSL** | 10 mm | with Spacer |
| **Zoom Scan Resolution** | dx, dy, dz = 5 mm | |
| **Frequency** | 2450 MHz ± 1 MHz | |

## Head TSL parameters

The following parameters and calculations were applied.

| | **Temperature** | **Permittivity** | **Conductivity** |
|---|---|---|---|
| **Nominal Head TSL parameters** | 22.0 °C | 39.2 | 1.80 mho/m |
| **Measured Head TSL parameters** | (22.0 ± 0.2) °C | 37.8 ± 6 % | 1.85 mho/m ± 6 % |
| **Head TSL temperature change during test** | < 0.5 °C | ---- | ---- |

## SAR result with Head TSL

| **SAR averaged over 1 cm³ (1 g) of Head TSL** | Condition | |
|---|---|---|
| SAR measured | 250 mW input power | 13.5 W/kg |
| SAR for nominal Head TSL parameters | normalized to 1W | **52.7 W/kg ± 17.0 % (k=2)** |

| **SAR averaged over 10 cm³ (10 g) of Head TSL** | condition | |
|---|---|---|
| SAR measured | 250 mW input power | 6.29 W/kg |
| SAR for nominal Head TSL parameters | normalized to 1W | **24.8 W/kg ± 16.5 % (k=2)** |



This test report is prohibited to copy or reissue in whole or in part without the approval of Dt&C Co., Ltd.

## Appendix (Additional assessments outside the scope of SCS 0108)

### Antenna Parameters with Head TSL

| | |
|---|---|
| Impedance, transformed to feed point | 54.4 Ω + 4.2 jΩ |
| Return Loss | - 24.7 dB |

### General Antenna Parameters and Design

| | |
|---|---|
| Electrical Delay (one direction) | 1.160 ns |

After long term use with 100W radiated power, only a slight warming of the dipole near the feedpoint can be measured.

The dipole is made of standard semirigid coaxial cable. The center conductor of the feeding line is directly connected to the second arm of the dipole. The antenna is therefore short-circuited for DC-signals. On some of the dipoles, small end caps are added to the dipole arms in order to improve matching when loaded according to the position as explained in the "Measurement Conditions" paragraph. The SAR data are not affected by this change. The overall dipole length is still according to the Standard.
No excessive force must be applied to the dipole arms, because they might bend or the soldered connections near the feedpoint may be damaged.

### Additional EUT Data

| | |
|---|---|
| Manufactured by | SPEAG |



This test report is prohibited to copy or reissue in whole or in part without the approval of Dt&C Co., Ltd.

## DASY5 Validation Report for Head TSL

Date: 19.07.2023

Test Laboratory: SPEAG, Zurich, Switzerland

**DUT: Dipole 2450 MHz; Type: D2450V2; Serial: D2450V2 - SN: 726**

Communication System: UID 0 - CW; Frequency: 2450 MHz
Medium parameters used: f = 2450 MHz; $\sigma$ = 1.85 S/m; $\varepsilon_r$ = 37.8; $\rho$ = 1000 kg/m$^3$
Phantom section: Flat Section
Measurement Standard: DASY5 (IEEE/IEC/ANSI C63.19-2011)

DASY52 Configuration:

- Probe: EX3DV4 - SN7349; ConvF(7.9, 7.9, 7.9) @ 2450 MHz; Calibrated: 10.01.2023
- Sensor-Surface: 1.4mm (Mechanical Surface Detection)
- Electronics: DAE4 Sn601; Calibrated: 19.12.2022
- Phantom: Flat Phantom 5.0 (front); Type: QD 000 P50 AA; Serial: 1001
- DASY52 52.10.4(1535); SEMCAD X 14.6.14(7501)

### Dipole Calibration for Head Tissue/Pin=250 mW, d=10mm/Zoom Scan (7x7x7)/Cube 0:

Measurement grid: dx=5mm, dy=5mm, dz=5mm
Reference Value = 116.0 V/m; Power Drift = -0.08 dB
Peak SAR (extrapolated) = 26.2 W/kg
**SAR(1 g) = 13.5 W/kg; SAR(10 g) = 6.29 W/kg**
Smallest distance from peaks to all points 3 dB below = 9 mm
Ratio of SAR at M2 to SAR at M1 = 51.6%
Maximum value of SAR (measured) = 21.9 W/kg

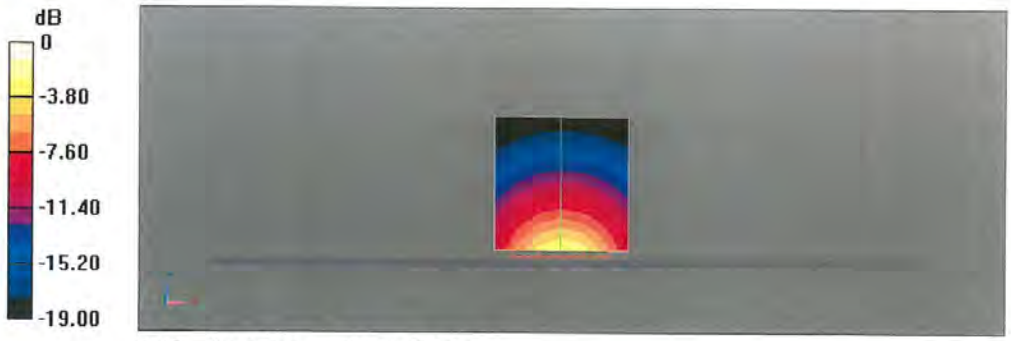


0 dB = 21.9 W/kg = 13.41 dBW/kg



This test report is prohibited to copy or reissue in whole or in part without the approval of Dt&C Co., Ltd.

**Impedance Measurement Plot for Head TSL**

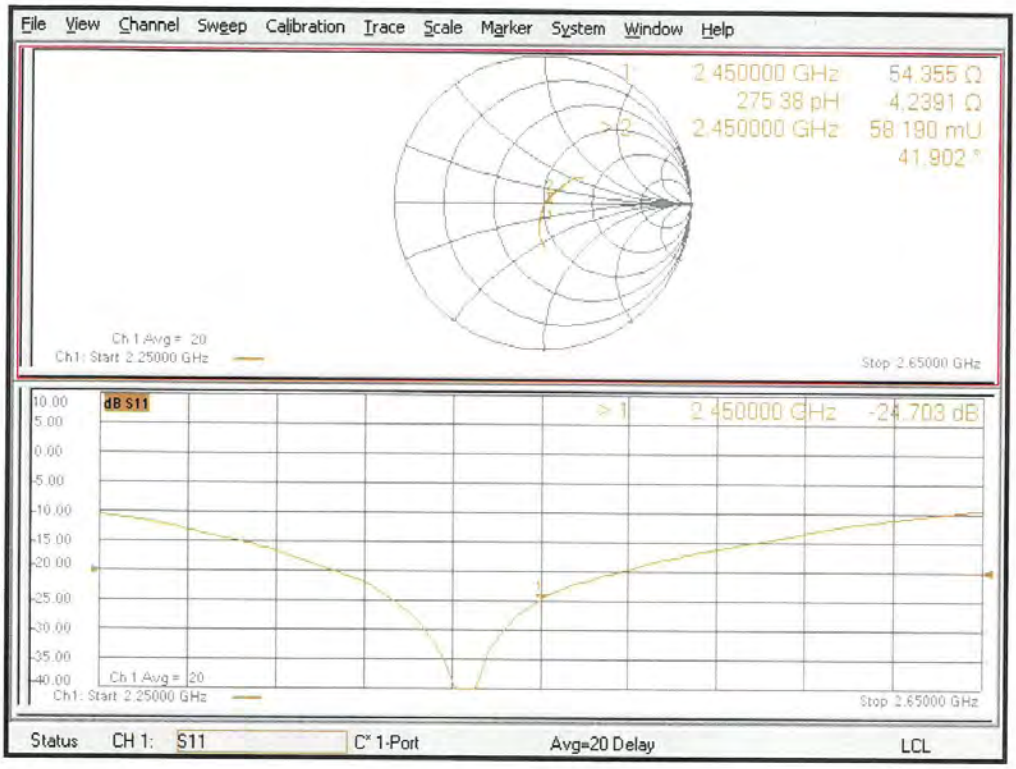




This test report is prohibited to copy or reissue in whole or in part without the approval of Dt&C Co., Ltd.

**Calibration Laboratory of**
Schmid & Partner
Engineering AG
**Zeughausstrasse 43, 8004 Zurich, Switzerland**

**S** Schweizerischer Kalibrierdienst
**C** Service suisse d'étalonnage
Servizio svizzero di taratura
**S** Swiss Calibration Service

Accredited by the Swiss Accreditation Service (SAS)
**The Swiss Accreditation Service is one of the signatories to the EA Multilateral Agreement for the recognition of calibration certificates**

Accreditation No.: **SCS 0108**

Client **DT&C (Dymstec)**

Certificate No: **D2600V2-1016_Jan23**

# CALIBRATION CERTIFICATE

| | |
|---|---|
| Object | D2600V2 - SN:1016 |
| Calibration procedure(s) | QA CAL-05.v12<br>Calibration Procedure for SAR Validation Sources between 0.7-3 GHz |
| Calibration date: | January 20, 2023 |

This calibration certificate documents the traceability to national standards, which realize the physical units of measurements (SI).
The measurements and the uncertainties with confidence probability are given on the following pages and are part of the certificate.

All calibrations have been conducted in the closed laboratory facility: environment temperature (22 ± 3)°C and humidity < 70%.

Calibration Equipment used (M&TE critical for calibration)

| Primary Standards | ID # | Cal Date (Certificate No.) | Scheduled Calibration |
|---|---|---|---|
| Power meter NRP | SN: 104778 | 04-Apr-22 (No. 217-03525/03524) | Apr-23 |
| Power sensor NRP-Z91 | SN: 103244 | 04-Apr-22 (No. 217-03524) | Apr-23 |
| Power sensor NRP-Z91 | SN: 103245 | 04-Apr-22 (No. 217-03525) | Apr-23 |
| Reference 20 dB Attenuator | SN: BH9394 (20k) | 04-Apr-22 (No. 217-03527) | Apr-23 |
| Type-N mismatch combination | SN: 310982 / 06327 | 04-Apr-22 (No. 217-03528) | Apr-23 |
| Reference Probe EX3DV4 | SN: 7349 | 10-Jan-23 (No. EX3-7349_Jan23) | Jan-24 |
| DAE4 | SN: 601 | 19-Dec-22 (No. DAE4-601_Dec22) | Dec-23 |

| Secondary Standards | ID # | Check Date (in house) | Scheduled Check |
|---|---|---|---|
| Power meter E4419B | SN: GB39512475 | 30-Oct-14 (in house check Oct-22) | In house check: Oct-24 |
| Power sensor HP 8481A | SN: US37292783 | 07-Oct-15 (in house check Oct-22) | In house check: Oct-24 |
| Power sensor HP 8481A | SN: MY41093315 | 07-Oct-15 (in house check Oct-22) | In house check: Oct-24 |
| RF generator R&S SMT-06 | SN: 100972 | 15-Jun-15 (in house check Oct-22) | In house check: Oct-24 |
| Network Analyzer Agilent E8358A | SN: US41080477 | 31-Mar-14 (in house check Oct-22) | In house check: Oct-24 |

| | Name | Function | Signature |
|---|---|---|---|
| Calibrated by: | Paulo Pina | Laboratory Technician | |
| Approved by: | Sven Kühn | Technical Manager | |

Issued: January 22, 2023

This calibration certificate shall not be reproduced except in full without written approval of the laboratory.



This test report is prohibited to copy or reissue in whole or in part without the approval of Dt&C Co., Ltd.

**Calibration Laboratory of**
Schmid & Partner
Engineering AG
**Zeughausstrasse 43, 8004 Zurich, Switzerland**

**S** Schweizerischer Kalibrierdienst
**C** Service suisse d'étalonnage
Servizio svizzero di taratura
**S** Swiss Calibration Service

Accredited by the Swiss Accreditation Service (SAS)
**The Swiss Accreditation Service is one of the signatories to the EA Multilateral Agreement for the recognition of calibration certificates**

Accreditation No.: **SCS 0108**

**Glossary:**

| | |
|---|---|
| TSL | tissue simulating liquid |
| ConvF | sensitivity in TSL / NORM x,y,z |
| N/A | not applicable or not measured |

**Calibration is Performed According to the Following Standards:**

a) IEC/IEEE 62209-1528, "Measurement Procedure For The Assessment Of Specific Absorption Rate Of Human Exposure To Radio Frequency Fields From Hand-Held And Body-Worn Wireless Communication Devices - Part 1528: Human Models, Instrumentation And Procedures (Frequency Range of 4 MHz to 10 GHz)", October 2020.
b) KDB 865664, "SAR Measurement Requirements for 100 MHz to 6 GHz"

**Additional Documentation:**

c) DASY System Handbook

**Methods Applied and Interpretation of Parameters:**

- *Measurement Conditions:* Further details are available from the Validation Report at the end of the certificate. All figures stated in the certificate are valid at the frequency indicated.
- *Antenna Parameters with TSL:* The source is mounted in a touch configuration below the center marking of the flat phantom.
- *Return Loss:* This parameter is measured with the source positioned under the liquid filled phantom (as described in the measurement condition clause). The Return Loss ensures low reflected power. No uncertainty required.
- *SAR measured:* SAR measured at the stated antenna input power.
- *SAR normalized:* SAR as measured, normalized to an input power of 1 W at the antenna connector.
- *SAR for nominal TSL parameters:* The measured TSL parameters are used to calculate the nominal SAR result.

The reported uncertainty of measurement is stated as the standard uncertainty of measurement multiplied by the coverage factor k=2, which for a normal distribution corresponds to a coverage probability of approximately 95%.



This test report is prohibited to copy or reissue in whole or in part without the approval of Dt&C Co., Ltd.

## Measurement Conditions

DASY system configuration, as far as not given on page 1.

| | | |
|---|---|---|
| **DASY Version** | DASY52 | V52.10.4 |
| **Extrapolation** | Advanced Extrapolation | |
| **Phantom** | Modular Flat Phantom | |
| **Distance Dipole Center - TSL** | 10 mm | with Spacer |
| **Zoom Scan Resolution** | dx, dy, dz = 5 mm | |
| **Frequency** | 2600 MHz ± 1 MHz | |

## Head TSL parameters

The following parameters and calculations were applied.

| | Temperature | Permittivity | Conductivity |
|---|---|---|---|
| **Nominal Head TSL parameters** | 22.0 °C | 39.0 | 1.96 mho/m |
| **Measured Head TSL parameters** | (22.0 ± 0.2) °C | 38.2 ± 6 % | 2.03 mho/m ± 6 % |
| **Head TSL temperature change during test** | < 0.5 °C | ---- | ---- |

## SAR result with Head TSL

| **SAR averaged over 1 cm³ (1 g) of Head TSL** | Condition | |
|---|---|---|
| SAR measured | 250 mW input power | 14.1 W/kg |
| SAR for nominal Head TSL parameters | normalized to 1W | **55.3 W/kg ± 17.0 % (k=2)** |

| **SAR averaged over 10 cm³ (10 g) of Head TSL** | condition | |
|---|---|---|
| SAR measured | 250 mW input power | 6.23 W/kg |
| SAR for nominal Head TSL parameters | normalized to 1W | **24.6 W/kg ± 16.5 % (k=2)** |

## Body TSL parameters

The following parameters and calculations were applied.

| | Temperature | Permittivity | Conductivity |
|---|---|---|---|
| **Nominal Body TSL parameters** | 22.0 °C | 52.5 | 2.16 mho/m |
| **Measured Body TSL parameters** | (22.0 ± 0.2) °C | 51.0 ± 6 % | 2.22 mho/m ± 6 % |
| **Body TSL temperature change during test** | < 0.5 °C | ---- | ---- |

## SAR result with Body TSL

| **SAR averaged over 1 cm³ (1 g) of Body TSL** | Condition | |
|---|---|---|
| SAR measured | 250 mW input power | 13.5 W/kg |
| SAR for nominal Body TSL parameters | normalized to 1W | **53.1 W/kg ± 17.0 % (k=2)** |

| **SAR averaged over 10 cm³ (10 g) of Body TSL** | condition | |
|---|---|---|
| SAR measured | 250 mW input power | 6.00 W/kg |
| SAR for nominal Body TSL parameters | normalized to 1W | **23.7 W/kg ± 16.5 % (k=2)** |



This test report is prohibited to copy or reissue in whole or in part without the approval of Dt&C Co., Ltd.

## Appendix (Additional assessments outside the scope of SCS 0108)

### Antenna Parameters with Head TSL

| | |
|---|---|
| Impedance, transformed to feed point | 48.7 Ω - 4.4 jΩ |
| Return Loss | - 26.6 dB |

### Antenna Parameters with Body TSL

| | |
|---|---|
| Impedance, transformed to feed point | 45.8 Ω - 4.5 jΩ |
| Return Loss | - 23.8 dB |

### General Antenna Parameters and Design

| | |
|---|---|
| Electrical Delay (one direction) | 1.152 ns |

After long term use with 100W radiated power, only a slight warming of the dipole near the feedpoint can be measured.

The dipole is made of standard semirigid coaxial cable. The center conductor of the feeding line is directly connected to the second arm of the dipole. The antenna is therefore short-circuited for DC-signals. On some of the dipoles, small end caps are added to the dipole arms in order to improve matching when loaded according to the position as explained in the "Measurement Conditions" paragraph. The SAR data are not affected by this change. The overall dipole length is still according to the Standard.
No excessive force must be applied to the dipole arms, because they might bend or the soldered connections near the feedpoint may be damaged.

### Additional EUT Data

| | |
|---|---|
| Manufactured by | SPEAG |



This test report is prohibited to copy or reissue in whole or in part without the approval of Dt&C Co., Ltd.

## DASY5 Validation Report for Head TSL

Date: 20.01.2023

Test Laboratory: SPEAG, Zurich, Switzerland

**DUT: Dipole 2600 MHz; Type: D2600V2; Serial: D2600V2 - SN:1016**

Communication System: UID 0 - CW; Frequency: 2600 MHz
Medium parameters used: f = 2600 MHz; $\sigma$ = 2.03 S/m; $\varepsilon_r$ = 38.2; $\rho$ = 1000 kg/m$^3$
Phantom section: Flat Section
Measurement Standard: DASY5 (IEEE/IEC/ANSI C63.19-2011)

DASY52 Configuration:

- Probe: EX3DV4 - SN7349; ConvF(7.84, 7.84, 7.84) @ 2600 MHz; Calibrated: 10.01.2023
- Sensor-Surface: 1.4mm (Mechanical Surface Detection)
- Electronics: DAE4 Sn601; Calibrated: 19.12.2022
- Phantom: Flat Phantom 5.0 (front); Type: QD 000 P50 AA; Serial: 1001
- DASY52 52.10.4(1535); SEMCAD X 14.6.14(7501)

### Dipole Calibration for Head Tissue/Pin=250 mW, d=10mm/Zoom Scan (7x7x7)/Cube 0:

Measurement grid: dx=5mm, dy=5mm, dz=5mm
Reference Value = 117.9 V/m; Power Drift = -0.02 dB
Peak SAR (extrapolated) = 27.8 W/kg
**SAR(1 g) = 14.1 W/kg; SAR(10 g) = 6.23 W/kg**
Smallest distance from peaks to all points 3 dB below = 9 mm
Ratio of SAR at M2 to SAR at M1 = 50.4%
Maximum value of SAR (measured) = 23.4 W/kg

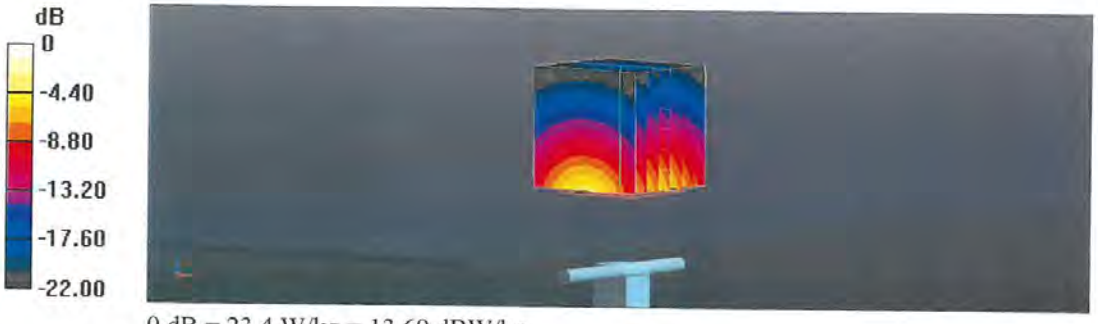


0 dB = 23.4 W/kg = 13.69 dBW/kg



This test report is prohibited to copy or reissue in whole or in part without the approval of Dt&C Co., Ltd.

**Impedance Measurement Plot for Head TSL**

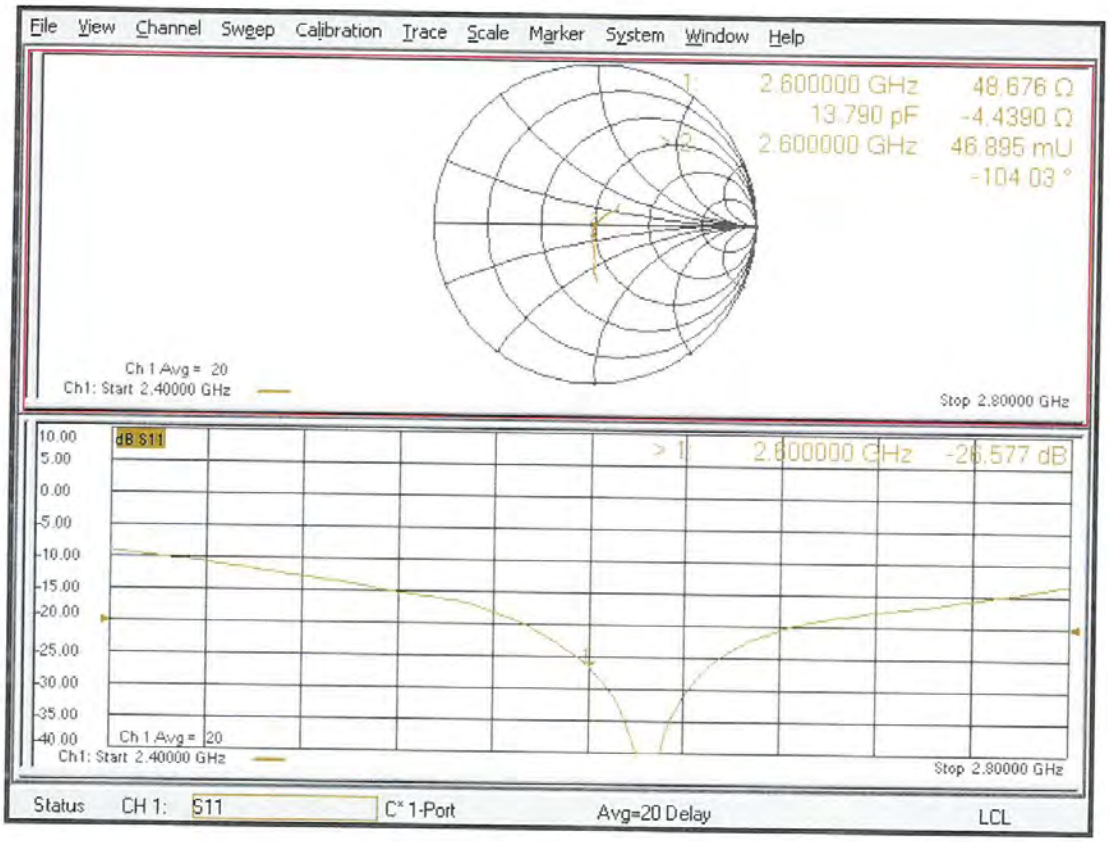




This test report is prohibited to copy or reissue in whole or in part without the approval of Dt&C Co., Ltd.

## DASY5 Validation Report for Body TSL

Date: 20.01.2023

Test Laboratory: SPEAG, Zurich, Switzerland

**DUT: Dipole 2600 MHz; Type: D2600V2; Serial: D2600V2 - SN:1016**

Communication System: UID 0 - CW; Frequency: 2600 MHz
Medium parameters used: f = 2600 MHz; $\sigma$ = 2.22 S/m; $\varepsilon_r$ = 51; $\rho$ = 1000 kg/m$^3$
Phantom section: Flat Section
Measurement Standard: DASY5 (IEEE/IEC/ANSI C63.19-2011)

DASY52 Configuration:

- Probe: EX3DV4 - SN7349; ConvF(7.91, 7.91, 7.91) @ 2600 MHz; Calibrated: 10.01.2023
- Sensor-Surface: 1.4mm (Mechanical Surface Detection)
- Electronics: DAE4 Sn601; Calibrated: 19.12.2022
- Phantom: Flat Phantom 5.0 (back); Type: QD 000 P50 AA; Serial: 1002
- DASY52 52.10.4(1535); SEMCAD X 14.6.14(7501)

### Dipole Calibration for Body Tissue/Pin=250 mW, d=10mm/Zoom Scan (7x7x7)/Cube 0:

Measurement grid: dx=5mm, dy=5mm, dz=5mm
Reference Value = 107.0 V/m; Power Drift = -0.04 dB
Peak SAR (extrapolated) = 26.7 W/kg
**SAR(1 g) = 13.5 W/kg; SAR(10 g) = 6.00 W/kg**
Smallest distance from peaks to all points 3 dB below = 8.1 mm
Ratio of SAR at M2 to SAR at M1 = 51.4%
Maximum value of SAR (measured) = 22.4 W/kg

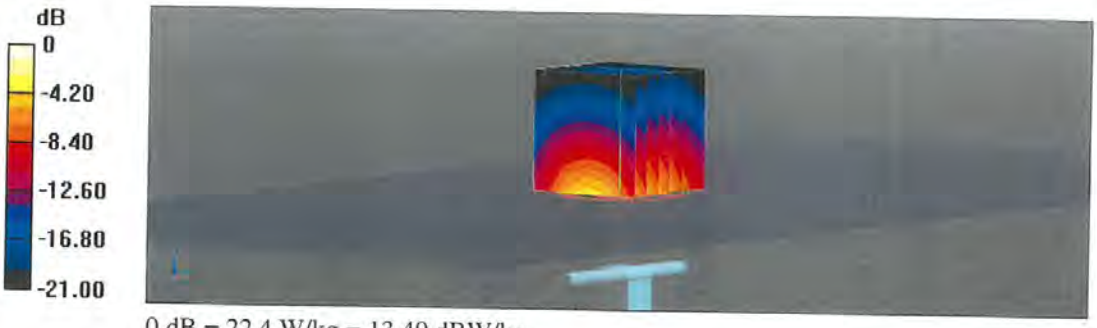


0 dB = 22.4 W/kg = 13.49 dBW/kg



This test report is prohibited to copy or reissue in whole or in part without the approval of Dt&C Co., Ltd.

## Impedance Measurement Plot for Body TSL

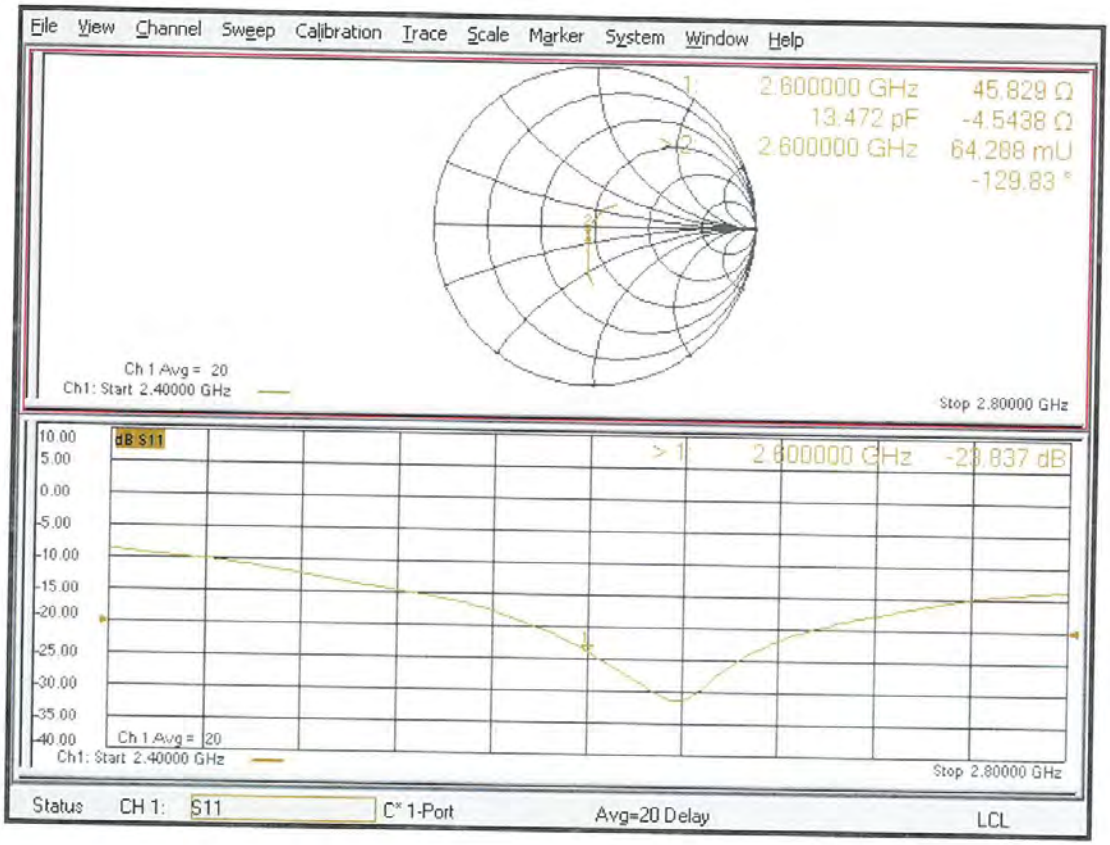




This test report is prohibited to copy or reissue in whole or in part without the approval of Dt&C Co., Ltd.

**Calibration Laboratory of**
Schmid & Partner
Engineering AG
**Zeughausstrasse 43, 8004 Zurich, Switzerland**

**S** Schweizerischer Kalibrierdienst
**C** Service suisse d'étalonnage
Servizio svizzero di taratura
**S** Swiss Calibration Service

Accredited by the Swiss Accreditation Service (SAS)
**The Swiss Accreditation Service is one of the signatories to the EA Multilateral Agreement for the recognition of calibration certificates**

Accreditation No.: **SCS 0108**

Client **DT&C (Dymstec)**

Certificate No: **D5GHzV2-1103_Jan23**

# CALIBRATION CERTIFICATE

| | |
|---|---|
| Object | D5GHzV2 - SN:1103 |
| Calibration procedure(s) | QA CAL-22.v7<br>Calibration Procedure for SAR Validation Sources between 3-10 GHz |
| Calibration date: | January 25, 2023 |

This calibration certificate documents the traceability to national standards, which realize the physical units of measurements (SI).
The measurements and the uncertainties with confidence probability are given on the following pages and are part of the certificate.

All calibrations have been conducted in the closed laboratory facility: environment temperature (22 ± 3)°C and humidity < 70%.

Calibration Equipment used (M&TE critical for calibration)

| Primary Standards | ID # | Cal Date (Certificate No.) | Scheduled Calibration |
|---|---|---|---|
| Power meter NRP | SN: 104778 | 04-Apr-22 (No. 217-03525/03524) | Apr-23 |
| Power sensor NRP-Z91 | SN: 103244 | 04-Apr-22 (No. 217-03524) | Apr-23 |
| Power sensor NRP-Z91 | SN: 103245 | 04-Apr-22 (No. 217-03525) | Apr-23 |
| Reference 20 dB Attenuator | SN: BH9394 (20k) | 04-Apr-22 (No. 217-03527) | Apr-23 |
| Type-N mismatch combination | SN: 310982 / 06327 | 04-Apr-22 (No. 217-03528) | Apr-23 |
| Reference Probe EX3DV4 | SN: 3503 | 08-Mar-22 (No. EX3-3503_Mar22) | Mar-23 |
| DAE4 | SN: 601 | 19-Dec-22 (No. DAE4-601_Dec22) | Dec-23 |

| Secondary Standards | ID # | Check Date (in house) | Scheduled Check |
|---|---|---|---|
| Power meter E4419B | SN: GB39512475 | 30-Oct-14 (in house check Oct-22) | In house check: Oct-24 |
| Power sensor HP 8481A | SN: US37292783 | 07-Oct-15 (in house check Oct-22) | In house check: Oct-24 |
| Power sensor HP 8481A | SN: MY41093315 | 07-Oct-15 (in house check Oct-22) | In house check: Oct-24 |
| RF generator R&S SMT-06 | SN: 100972 | 15-Jun-15 (in house check Oct-22) | In house check: Oct-24 |
| Network Analyzer Agilent E8358A | SN: US41080477 | 31-Mar-14 (in house check Oct-22) | In house check: Oct-24 |

| | Name | Function | Signature |
|---|---|---|---|
| Calibrated by: | Paulo Pina | Laboratory Technician | |
| Approved by: | Sven Kühn | Technical Manager | |

Issued: January 26, 2023

This calibration certificate shall not be reproduced except in full without written approval of the laboratory.



This test report is prohibited to copy or reissue in whole or in part without the approval of Dt&C Co., Ltd.

**Calibration Laboratory of**
Schmid & Partner
Engineering AG
Zeughausstrasse 43, 8004 Zurich, Switzerland

S Schweizerischer Kalibrierdienst
C Service suisse d'étalonnage
S Servizio svizzero di taratura
Swiss Calibration Service

Accredited by the Swiss Accreditation Service (SAS)
**The Swiss Accreditation Service is one of the signatories to the EA Multilateral Agreement for the recognition of calibration certificates**

Accreditation No.: **SCS 0108**

**Glossary:**

| | |
|---|---|
| TSL | tissue simulating liquid |
| ConvF | sensitivity in TSL / NORM x,y,z |
| N/A | not applicable or not measured |

**Calibration is Performed According to the Following Standards:**

a) IEC/IEEE 62209-1528, "Measurement Procedure For The Assessment Of Specific Absorption Rate Of Human Exposure To Radio Frequency Fields From Hand-Held And Body-Worn Wireless Communication Devices - Part 1528: Human Models, Instrumentation And Procedures (Frequency Range of 4 MHz to 10 GHz)", October 2020.
b) KDB 865664, "SAR Measurement Requirements for 100 MHz to 6 GHz"

**Additional Documentation:**

c) DASY System Handbook

**Methods Applied and Interpretation of Parameters:**

- *Measurement Conditions:* Further details are available from the Validation Report at the end of the certificate. All figures stated in the certificate are valid at the frequency indicated.
- *Antenna Parameters with TSL:* The source is mounted in a touch configuration below the center marking of the flat phantom.
- *Return Loss:* This parameter is measured with the source positioned under the liquid filled phantom (as described in the measurement condition clause). The Return Loss ensures low reflected power. No uncertainty required.
- *SAR measured:* SAR measured at the stated antenna input power.
- *SAR normalized:* SAR as measured, normalized to an input power of 1 W at the antenna connector.
- *SAR for nominal TSL parameters:* The measured TSL parameters are used to calculate the nominal SAR result.

The reported uncertainty of measurement is stated as the standard uncertainty of measurement multiplied by the coverage factor k=2, which for a normal distribution corresponds to a coverage probability of approximately 95%.



This test report is prohibited to copy or reissue in whole or in part without the approval of Dt&C Co., Ltd.

## Measurement Conditions

DASY system configuration, as far as not given on page 1.

| | | |
|---|---|---|
| **DASY Version** | DASY52 | V52.10.4 |
| **Extrapolation** | Advanced Extrapolation | |
| **Phantom** | Modular Flat Phantom V5.0 | |
| **Distance Dipole Center - TSL** | 10 mm | with Spacer |
| **Zoom Scan Resolution** | dx, dy = 4.0 mm, dz = 1.4 mm | Graded Ratio = 1.4 (Z direction) |
| **Frequency** | 5200 MHz ± 1 MHz<br>5300 MHz ± 1 MHz<br>5500 MHz ± 1 MHz<br>5600 MHz ± 1 MHz<br>5800 MHz ± 1 MHz | |

## Head TSL parameters at 5200 MHz

The following parameters and calculations were applied.

| | Temperature | Permittivity | Conductivity |
|---|---|---|---|
| **Nominal Head TSL parameters** | 22.0 °C | 36.0 | 4.66 mho/m |
| **Measured Head TSL parameters** | (22.0 ± 0.2) °C | 35.7 ± 6 % | 4.58 mho/m ± 6 % |
| **Head TSL temperature change during test** | < 0.5 °C | ---- | ---- |

## SAR result with Head TSL at 5200 MHz

| **SAR averaged over 1 $cm^3$ (1 g) of Head TSL** | Condition | |
|---|---|---|
| SAR measured | 100 mW input power | 8.08 W/kg |
| SAR for nominal Head TSL parameters | normalized to 1W | **80.6 W/kg ± 19.9 % (k=2)** |

| **SAR averaged over 10 $cm^3$ (10 g) of Head TSL** | condition | |
|---|---|---|
| SAR measured | 100 mW input power | 2.29 W/kg |
| SAR for nominal Head TSL parameters | normalized to 1W | **22.8 W/kg ± 19.5 % (k=2)** |



This test report is prohibited to copy or reissue in whole or in part without the approval of Dt&C Co., Ltd.

## Head TSL parameters at 5300 MHz

The following parameters and calculations were applied.

| | Temperature | Permittivity | Conductivity |
|---|---|---|---|
| **Nominal Head TSL parameters** | 22.0 °C | 35.9 | 4.76 mho/m |
| **Measured Head TSL parameters** | (22.0 ± 0.2) °C | 35.6 ± 6 % | 4.72 mho/m ± 6 % |
| **Head TSL temperature change during test** | < 0.5 °C | ---- | ---- |

## SAR result with Head TSL at 5300 MHz

| **SAR averaged over 1 cm³ (1 g) of Head TSL** | Condition | |
|---|---|---|
| SAR measured | 100 mW input power | 8.39 W/kg |
| SAR for nominal Head TSL parameters | normalized to 1W | **83.8 W/kg ± 19.9 % (k=2)** |

| **SAR averaged over 10 cm³ (10 g) of Head TSL** | condition | |
|---|---|---|
| SAR measured | 100 mW input power | 2.39 W/kg |
| SAR for nominal Head TSL parameters | normalized to 1W | **23.8 W/kg ± 19.5 % (k=2)** |

## Head TSL parameters at 5500 MHz

The following parameters and calculations were applied.

| | Temperature | Permittivity | Conductivity |
|---|---|---|---|
| **Nominal Head TSL parameters** | 22.0 °C | 35.6 | 4.96 mho/m |
| **Measured Head TSL parameters** | (22.0 ± 0.2) °C | 35.5 ± 6 % | 4.95 mho/m ± 6 % |
| **Head TSL temperature change during test** | < 0.5 °C | ---- | ---- |

## SAR result with Head TSL at 5500 MHz

| **SAR averaged over 1 cm³ (1 g) of Head TSL** | Condition | |
|---|---|---|
| SAR measured | 100 mW input power | 8.68 W/kg |
| SAR for nominal Head TSL parameters | normalized to 1W | **86.8 W/kg ± 19.9 % (k=2)** |

| **SAR averaged over 10 cm³ (10 g) of Head TSL** | condition | |
|---|---|---|
| SAR measured | 100 mW input power | 2.45 W/kg |
| SAR for nominal Head TSL parameters | normalized to 1W | **24.5 W/kg ± 19.5 % (k=2)** |



This test report is prohibited to copy or reissue in whole or in part without the approval of Dt&C Co., Ltd.

## Head TSL parameters at 5600 MHz

The following parameters and calculations were applied.

| | Temperature | Permittivity | Conductivity |
|---|---|---|---|
| **Nominal Head TSL parameters** | 22.0 °C | 35.5 | 5.07 mho/m |
| **Measured Head TSL parameters** | (22.0 ± 0.2) °C | 35.4 ± 6 % | 5.03 mho/m ± 6 % |
| **Head TSL temperature change during test** | < 0.5 °C | ---- | ---- |

## SAR result with Head TSL at 5600 MHz

| **SAR averaged over 1 cm³ (1 g) of Head TSL** | Condition | |
|---|---|---|
| SAR measured | 100 mW input power | 8.48 W/kg |
| SAR for nominal Head TSL parameters | normalized to 1W | **84.8 W/kg ± 19.9 % (k=2)** |

| **SAR averaged over 10 cm³ (10 g) of Head TSL** | condition | |
|---|---|---|
| SAR measured | 100 mW input power | 2.39 W/kg |
| SAR for nominal Head TSL parameters | normalized to 1W | **23.9 W/kg ± 19.5 % (k=2)** |

## Head TSL parameters at 5800 MHz

The following parameters and calculations were applied.

| | Temperature | Permittivity | Conductivity |
|---|---|---|---|
| **Nominal Head TSL parameters** | 22.0 °C | 35.3 | 5.27 mho/m |
| **Measured Head TSL parameters** | (22.0 ± 0.2) °C | 35.1 ± 6 % | 5.18 mho/m ± 6 % |
| **Head TSL temperature change during test** | < 0.5 °C | ---- | ---- |

## SAR result with Head TSL at 5800 MHz

| **SAR averaged over 1 cm³ (1 g) of Head TSL** | Condition | |
|---|---|---|
| SAR measured | 100 mW input power | 8.17 W/kg |
| SAR for nominal Head TSL parameters | normalized to 1W | **81.6 W/kg ± 19.9 % (k=2)** |

| **SAR averaged over 10 cm³ (10 g) of Head TSL** | condition | |
|---|---|---|
| SAR measured | 100 mW input power | 2.30 W/kg |
| SAR for nominal Head TSL parameters | normalized to 1W | **22.9 W/kg ± 19.5 % (k=2)** |



This test report is prohibited to copy or reissue in whole or in part without the approval of Dt&C Co., Ltd.

## Body TSL parameters at 5200 MHz

The following parameters and calculations were applied.

| | Temperature | Permittivity | Conductivity |
|---|---|---|---|
| **Nominal Body TSL parameters** | 22.0 °C | 49.0 | 5.30 mho/m |
| **Measured Body TSL parameters** | (22.0 ± 0.2) °C | 49.0 ± 6 % | 5.42 mho/m ± 6 % |
| **Body TSL temperature change during test** | < 0.5 °C | — | — |

## SAR result with Body TSL at 5200 MHz

| **SAR averaged over 1 cm³ (1 g) of Body TSL** | Condition | |
|---|---|---|
| SAR measured | 100 mW input power | 7.39 W/kg |
| SAR for nominal Body TSL parameters | normalized to 1W | **74.0 W/kg ± 19.9 % (k=2)** |

| **SAR averaged over 10 cm³ (10 g) of Body TSL** | condition | |
|---|---|---|
| SAR measured | 100 mW input power | 2.06 W/kg |
| SAR for nominal Body TSL parameters | normalized to 1W | **20.6 W/kg ± 19.5 % (k=2)** |

## Body TSL parameters at 5300 MHz

The following parameters and calculations were applied.

| | Temperature | Permittivity | Conductivity |
|---|---|---|---|
| **Nominal Body TSL parameters** | 22.0 °C | 48.9 | 5.42 mho/m |
| **Measured Body TSL parameters** | (22.0 ± 0.2) °C | 48.9 ± 6 % | 5.59 mho/m ± 6 % |
| **Body TSL temperature change during test** | < 0.5 °C | — | — |

## SAR result with Body TSL at 5300 MHz

| **SAR averaged over 1 cm³ (1 g) of Body TSL** | Condition | |
|---|---|---|
| SAR measured | 100 mW input power | 7.57 W/kg |
| SAR for nominal Body TSL parameters | normalized to 1W | **75.8 W/kg ± 19.9 % (k=2)** |

| **SAR averaged over 10 cm³ (10 g) of Body TSL** | condition | |
|---|---|---|
| SAR measured | 100 mW input power | 2.12 W/kg |
| SAR for nominal Body TSL parameters | normalized to 1W | **21.2 W/kg ± 19.5 % (k=2)** |



This test report is prohibited to copy or reissue in whole or in part without the approval of Dt&C Co., Ltd.

## Body TSL parameters at 5500 MHz

The following parameters and calculations were applied.

| | Temperature | Permittivity | Conductivity |
|---|---|---|---|
| **Nominal Body TSL parameters** | 22.0 °C | 48.6 | 5.65 mho/m |
| **Measured Body TSL parameters** | (22.0 ± 0.2) °C | 48.7 ± 6 % | 5.88 mho/m ± 6 % |
| **Body TSL temperature change during test** | < 0.5 °C | — | — |

## SAR result with Body TSL at 5500 MHz

| **SAR averaged over 1 cm³ (1 g) of Body TSL** | Condition | |
|---|---|---|
| SAR measured | 100 mW input power | 7.87 W/kg |
| SAR for nominal Body TSL parameters | normalized to 1W | **78.9 W/kg ± 19.9 % (k=2)** |

| **SAR averaged over 10 cm³ (10 g) of Body TSL** | condition | |
|---|---|---|
| SAR measured | 100 mW input power | 2.18 W/kg |
| SAR for nominal Body TSL parameters | normalized to 1W | **21.9 W/kg ± 19.5 % (k=2)** |

## Body TSL parameters at 5600 MHz

The following parameters and calculations were applied.

| | Temperature | Permittivity | Conductivity |
|---|---|---|---|
| **Nominal Body TSL parameters** | 22.0 °C | 48.5 | 5.77 mho/m |
| **Measured Body TSL parameters** | (22.0 ± 0.2) °C | 48.6 ± 6 % | 6.00 mho/m ± 6 % |
| **Body TSL temperature change during test** | < 0.5 °C | — | — |

## SAR result with Body TSL at 5600 MHz

| **SAR averaged over 1 cm³ (1 g) of Body TSL** | Condition | |
|---|---|---|
| SAR measured | 100 mW input power | 8.00 W/kg |
| SAR for nominal Body TSL parameters | normalized to 1W | **80.2 W/kg ± 19.9 % (k=2)** |

| **SAR averaged over 10 cm³ (10 g) of Body TSL** | condition | |
|---|---|---|
| SAR measured | 100 mW input power | 2.22 W/kg |
| SAR for nominal Body TSL parameters | normalized to 1W | **22.2 W/kg ± 19.5 % (k=2)** |



This test report is prohibited to copy or reissue in whole or in part without the approval of Dt&C Co., Ltd.

## Body TSL parameters at 5800 MHz

The following parameters and calculations were applied.

| | Temperature | Permittivity | Conductivity |
|---|---|---|---|
| **Nominal Body TSL parameters** | 22.0 °C | 48.2 | 6.00 mho/m |
| **Measured Body TSL parameters** | (22.0 ± 0.2) °C | 48.2 ± 6 % | 6.24 mho/m ± 6 % |
| **Body TSL temperature change during test** | < 0.5 °C | — | — |

## SAR result with Body TSL at 5800 MHz

| **SAR averaged over 1 cm³ (1 g) of Body TSL** | Condition | |
|---|---|---|
| SAR measured | 100 mW input power | 7.42 W/kg |
| SAR for nominal Body TSL parameters | normalized to 1W | **74.3 W/kg ± 19.9 % (k=2)** |

| **SAR averaged over 10 cm³ (10 g) of Body TSL** | condition | |
|---|---|---|
| SAR measured | 100 mW input power | 2.05 W/kg |
| SAR for nominal Body TSL parameters | normalized to 1W | **20.5 W/kg ± 19.5 % (k=2)** |



This test report is prohibited to copy or reissue in whole or in part without the approval of Dt&C Co., Ltd.

## Appendix (Additional assessments outside the scope of SCS 0108)

### Antenna Parameters with Head TSL at 5200 MHz

| | |
|---|---|
| Impedance, transformed to feed point | 51.2 Ω - 6.4 jΩ |
| Return Loss | - 23.9 dB |

### Antenna Parameters with Head TSL at 5300 MHz

| | |
|---|---|
| Impedance, transformed to feed point | 48.4 Ω - 0.2 jΩ |
| Return Loss | - 36.0 dB |

### Antenna Parameters with Head TSL at 5500 MHz

| | |
|---|---|
| Impedance, transformed to feed point | 49.7 Ω - 2.0 jΩ |
| Return Loss | - 34.0 dB |

### Antenna Parameters with Head TSL at 5600 MHz

| | |
|---|---|
| Impedance, transformed to feed point | 55.5 Ω + 0.8 jΩ |
| Return Loss | - 25.5 dB |

### Antenna Parameters with Head TSL at 5800 MHz

| | |
|---|---|
| Impedance, transformed to feed point | 51.9 Ω + 1.5 jΩ |
| Return Loss | - 32.4 dB |

### Antenna Parameters with Body TSL at 5200 MHz

| | |
|---|---|
| Impedance, transformed to feed point | 51.4 Ω - 4.5 jΩ |
| Return Loss | - 26.8 dB |

### Antenna Parameters with Body TSL at 5300 MHz

| | |
|---|---|
| Impedance, transformed to feed point | 48.5 Ω + 2.1 jΩ |
| Return Loss | - 31.6 dB |

### Antenna Parameters with Body TSL at 5500 MHz

| | |
|---|---|
| Impedance, transformed to feed point | 50.4 Ω + 0.1 jΩ |
| Return Loss | - 46.6 dB |



This test report is prohibited to copy or reissue in whole or in part without the approval of Dt&C Co., Ltd.

## Antenna Parameters with Body TSL at 5600 MHz

| | |
|---|---|
| Impedance, transformed to feed point | 56.4 Ω + 4.2 jΩ |
| Return Loss | - 22.9 dB |

## Antenna Parameters with Body TSL at 5800 MHz

| | |
|---|---|
| Impedance, transformed to feed point | 53.8 Ω + 2.5 jΩ |
| Return Loss | - 27.2 dB |

## General Antenna Parameters and Design

| | |
|---|---|
| Electrical Delay (one direction) | 1.207 ns |

After long term use with 100W radiated power, only a slight warming of the dipole near the feedpoint can be measured.

The dipole is made of standard semirigid coaxial cable. The center conductor of the feeding line is directly connected to the second arm of the dipole. The antenna is therefore short-circuited for DC-signals. On some of the dipoles, small end caps are added to the dipole arms in order to improve matching when loaded according to the position as explained in the "Measurement Conditions" paragraph. The SAR data are not affected by this change. The overall dipole length is still according to the Standard.
No excessive force must be applied to the dipole arms, because they might bend or the soldered connections near the feedpoint may be damaged.

## Additional EUT Data

| | |
|---|---|
| Manufactured by | SPEAG |



This test report is prohibited to copy or reissue in whole or in part without the approval of Dt&C Co., Ltd.

## DASY5 Validation Report for Head TSL

Date: 25.01.2023

Test Laboratory: SPEAG, Zurich, Switzerland

**DUT: Dipole D5GHzV2; Type: D5GHzV2; Serial: D5GHzV2 - SN:1103**

Communication System: UID 0 - CW; Frequency: 5200 MHz, Frequency: 5300 MHz, Frequency: 5500 MHz, Frequency: 5600 MHz, Frequency: 5800 MHz
Medium parameters used: f = 5200 MHz; $\sigma$ = 4.58 S/m; $\varepsilon_r$ = 35.7; $\rho$ = 1000 kg/m$^3$
Medium parameters used: f = 5300 MHz; $\sigma$ = 4.72 S/m; $\varepsilon_r$ = 35.6; $\rho$ = 1000 kg/m$^3$
Medium parameters used: f = 5500 MHz; $\sigma$ = 4.95 S/m; $\varepsilon_r$ = 35.5; $\rho$ = 1000 kg/m$^3$
Medium parameters used: f = 5600 MHz; $\sigma$ = 5.03 S/m; $\varepsilon_r$ = 35.4; $\rho$ = 1000 kg/m$^3$
Medium parameters used: f = 5800 MHz; $\sigma$ = 5.18 S/m; $\varepsilon_r$ = 35.1; $\rho$ = 1000 kg/m$^3$
Phantom section: Flat Section
Measurement Standard: DASY5 (IEEE/IEC/ANSI C63.19-2011)

DASY52 Configuration:

- Probe: EX3DV4 - SN3503; ConvF(5.8, 5.8, 5.8) @ 5200 MHz, ConvF(5.49, 5.49, 5.49) @ 5300 MHz, ConvF(5.25, 5.25, 5.25) @ 5500 MHz, ConvF(5.1, 5.1, 5.1) @ 5600 MHz, ConvF(5.01, 5.01, 5.01) @ 5800 MHz; Calibrated: 08.03.2022
- Sensor-Surface: 1.4mm (Mechanical Surface Detection)
- Electronics: DAE4 Sn601; Calibrated: 19.12.2022
- Phantom: Flat Phantom 5.0 (front); Type: QD 000 P50 AA; Serial: 1001
- DASY52 52.10.4(1535); SEMCAD X 14.6.14(7501)

**Dipole Calibration for Head Tissue/Pin=100mW, dist=10mm, f=5200 MHz/Zoom Scan, dist=1.4mm (8x8x7)/Cube 0:** Measurement grid: dx=4mm, dy=4mm, dz=1.4mm
Reference Value = 74.46 V/m; Power Drift = -0.03 dB
Peak SAR (extrapolated) = 28.6 W/kg
**SAR(1 g) = 8.08 W/kg; SAR(10 g) = 2.29 W/kg**
Smallest distance from peaks to all points 3 dB below = 6.9 mm
Ratio of SAR at M2 to SAR at M1 = 69.2%
Maximum value of SAR (measured) = 18.3 W/kg

**Dipole Calibration for Head Tissue/Pin=100mW, dist=10mm, f=5300 MHz/Zoom Scan, dist=1.4mm (8x8x7)/Cube 0:** Measurement grid: dx=4mm, dy=4mm, dz=1.4mm
Reference Value = 75.84 V/m; Power Drift = -0.01 dB
Peak SAR (extrapolated) = 29.6 W/kg
**SAR(1 g) = 8.39 W/kg; SAR(10 g) = 2.39 W/kg**
Smallest distance from peaks to all points 3 dB below = 7.2 mm
Ratio of SAR at M2 to SAR at M1 = 69.4%
Maximum value of SAR (measured) = 19.1 W/kg



This test report is prohibited to copy or reissue in whole or in part without the approval of Dt&C Co., Ltd.

**Dipole Calibration for Head Tissue/Pin=100mW, dist=10mm, f=5500 MHz/Zoom Scan, dist=1.4mm (8x8x7)/Cube 0:** Measurement grid: dx=4mm, dy=4mm, dz=1.4mm
Reference Value = 74.72 V/m; Power Drift = -0.04 dB
Peak SAR (extrapolated) = 33.3 W/kg
**SAR(1 g) = 8.68 W/kg; SAR(10 g) = 2.45 W/kg**
Smallest distance from peaks to all points 3 dB below = 7.2 mm
Ratio of SAR at M2 to SAR at M1 = 66.6%
Maximum value of SAR (measured) = 20.3 W/kg

**Dipole Calibration for Head Tissue/Pin=100mW, dist=10mm, f=5600 MHz/Zoom Scan, dist=1.4mm (8x8x7)/Cube 0:** Measurement grid: dx=4mm, dy=4mm, dz=1.4mm
Reference Value = 76.00 V/m; Power Drift = -0.05 dB
Peak SAR (extrapolated) = 31.4 W/kg
**SAR(1 g) = 8.48 W/kg; SAR(10 g) = 2.39 W/kg**
Smallest distance from peaks to all points 3 dB below = 7.2 mm
Ratio of SAR at M2 to SAR at M1 = 67.7%
Maximum value of SAR (measured) = 19.7 W/kg

**Dipole Calibration for Head Tissue/Pin=100mW, dist=10mm, f=5800 MHz/Zoom Scan, dist=1.4mm (8x8x7)/Cube 0:** Measurement grid: dx=4mm, dy=4mm, dz=1.4mm
Reference Value = 72.84 V/m; Power Drift = -0.02 dB
Peak SAR (extrapolated) = 32.2 W/kg
**SAR(1 g) = 8.17 W/kg; SAR(10 g) = 2.30 W/kg**
Smallest distance from peaks to all points 3 dB below = 7.2 mm
Ratio of SAR at M2 to SAR at M1 = 65.6%
Maximum value of SAR (measured) = 19.3 W/kg

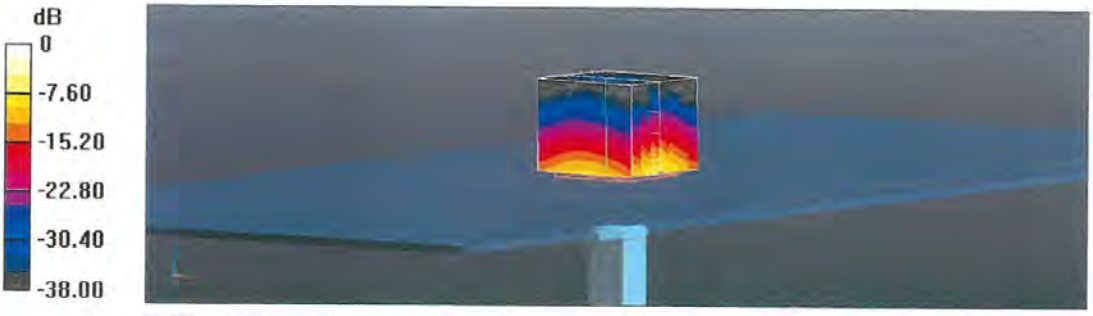

0 dB = 20.3 W/kg = 13.07 dBW/kg



This test report is prohibited to copy or reissue in whole or in part without the approval of Dt&C Co., Ltd.

## Impedance Measurement Plot for Head TSL

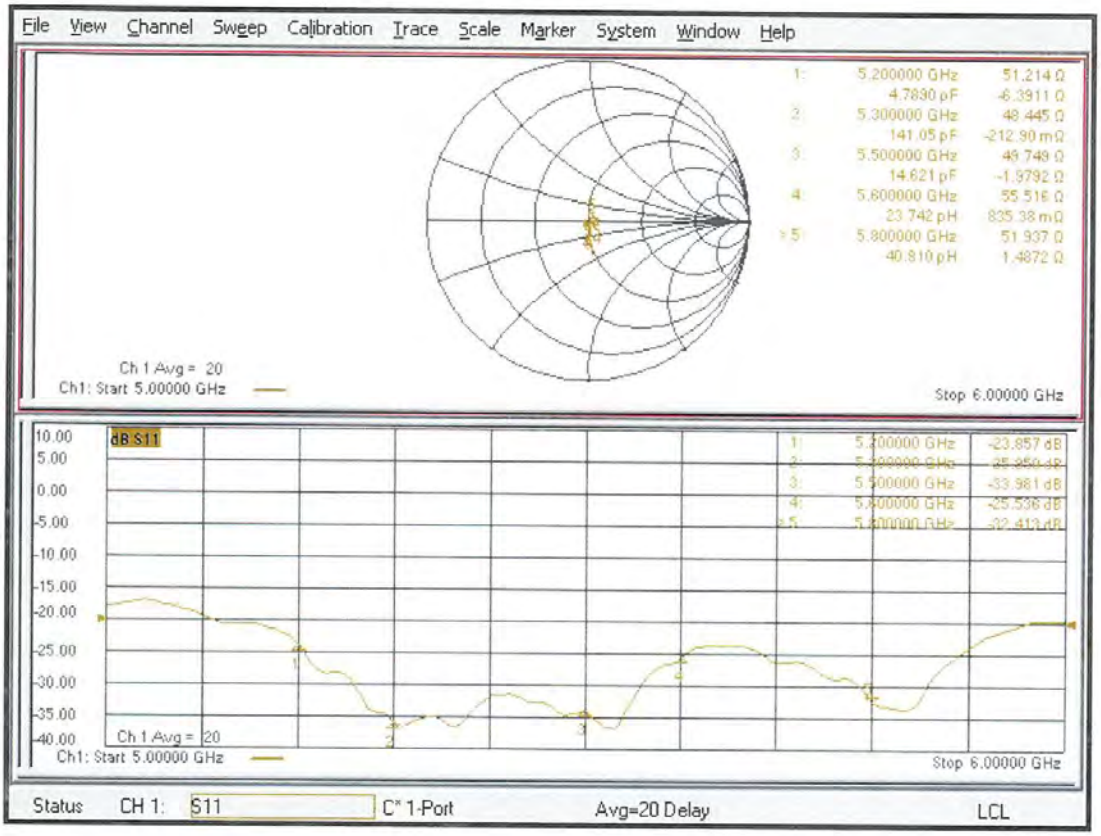




This test report is prohibited to copy or reissue in whole or in part without the approval of Dt&C Co., Ltd.

## DASY5 Validation Report for Body TSL

Date: 18.01.2023

Test Laboratory: SPEAG, Zurich, Switzerland

**DUT: Dipole D5GHzV2; Type: D5GHzV2; Serial: D5GHzV2 - SN:1103**

Communication System: UID 0 - CW; Frequency: 5200 MHz, Frequency: 5300 MHz, Frequency: 5500 MHz, Frequency: 5600 MHz, Frequency: 5800 MHz
Medium parameters used: f = 5200 MHz; $\sigma$ = 5.42 S/m; $\varepsilon_r$ = 49; $\rho$ = 1000 kg/m$^3$
Medium parameters used: f = 5300 MHz; $\sigma$ = 5.59 S/m; $\varepsilon_r$ = 48.9; $\rho$ = 1000 kg/m$^3$
Medium parameters used: f = 5500 MHz; $\sigma$ = 5.88 S/m; $\varepsilon_r$ = 48.7; $\rho$ = 1000 kg/m$^3$
Medium parameters used: f = 5600 MHz; $\sigma$ = 6 S/m; $\varepsilon_r$ = 48.6; $\rho$ = 1000 kg/m$^3$
Medium parameters used: f = 5800 MHz; $\sigma$ = 6.24 S/m; $\varepsilon_r$ = 48.2; $\rho$ = 1000 kg/m$^3$
Phantom section: Flat Section
Measurement Standard: DASY5 (IEEE/IEC/ANSI C63.19-2011)

DASY52 Configuration:

- Probe: EX3DV4 - SN3503; ConvF(5.29, 5.29, 5.29) @ 5200 MHz, ConvF(5.23, 5.23, 5.23) @ 5300 MHz, ConvF(4.84, 4.84, 4.84) @ 5500 MHz, ConvF(4.79, 4.79, 4.79) @ 5600 MHz, ConvF(4.62, 4.62, 4.62) @ 5800 MHz; Calibrated: 08.03.2022
- Sensor-Surface: 1.4mm (Mechanical Surface Detection)
- Electronics: DAE4 Sn601; Calibrated: 19.12.2022
- Phantom: Flat Phantom 5.0 (back); Type: QD 000 P50 AA; Serial: 1002
- DASY52 52.10.4(1535); SEMCAD X 14.6.14(7501)

**Dipole Calibration for Body Tissue/Pin=100mW, dist=10mm, f=5200 MHz/Zoom Scan, dist=1.4mm (8x8x7)/Cube 0:** Measurement grid: dx=4mm, dy=4mm, dz=1.4mm
Reference Value = 65.29 V/m; Power Drift = -0.08 dB
Peak SAR (extrapolated) = 27.2 W/kg
**SAR(1 g) = 7.39 W/kg; SAR(10 g) = 2.06 W/kg**
Smallest distance from peaks to all points 3 dB below = 6.8 mm
Ratio of SAR at M2 to SAR at M1 = 68.1%
Maximum value of SAR (measured) = 17.3 W/kg

**Dipole Calibration for Body Tissue/Pin=100mW, dist=10mm, f=5300 MHz/Zoom Scan, dist=1.4mm (8x8x7)/Cube 0:** Measurement grid: dx=4mm, dy=4mm, dz=1.4mm
Reference Value = 65.11 V/m; Power Drift = -0.07 dB
Peak SAR (extrapolated) = 28.8 W/kg
**SAR(1 g) = 7.57 W/kg; SAR(10 g) = 2.12 W/kg**
Smallest distance from peaks to all points 3 dB below = 7.2 mm
Ratio of SAR at M2 to SAR at M1 = 66.9%
Maximum value of SAR (measured) = 17.9 W/kg



This test report is prohibited to copy or reissue in whole or in part without the approval of Dt&C Co., Ltd.

**Dipole Calibration for Body Tissue/Pin=100mW, dist=10mm, f=5500 MHz/Zoom Scan, dist=1.4mm (8x8x7)/Cube 0:** Measurement grid: dx=4mm, dy=4mm, dz=1.4mm
Reference Value = 65.78 V/m; Power Drift = -0.08 dB
Peak SAR (extrapolated) = 31.9 W/kg
**SAR(1 g) = 7.87 W/kg; SAR(10 g) = 2.18 W/kg**
Smallest distance from peaks to all points 3 dB below = 7.2 mm
Ratio of SAR at M2 to SAR at M1 = 65%
Maximum value of SAR (measured) = 19.1 W/kg

**Dipole Calibration for Body Tissue/Pin=100mW, dist=10mm, f=5600 MHz/Zoom Scan, dist=1.4mm (8x8x7)/Cube 0:** Measurement grid: dx=4mm, dy=4mm, dz=1.4mm
Reference Value = 65.97 V/m; Power Drift = -0.09 dB
Peak SAR (extrapolated) = 33.3 W/kg
**SAR(1 g) = 8 W/kg; SAR(10 g) = 2.22 W/kg**
Smallest distance from peaks to all points 3 dB below = 7.2 mm
Ratio of SAR at M2 to SAR at M1 = 64%
Maximum value of SAR (measured) = 19.6 W/kg

**Dipole Calibration for Body Tissue/Pin=100mW, dist=10mm, f=5800 MHz/Zoom Scan, dist=1.4mm (8x8x7)/Cube 0:** Measurement grid: dx=4mm, dy=4mm, dz=1.4mm
Reference Value = 63.41 V/m; Power Drift = -0.08 dB
Peak SAR (extrapolated) = 31.4 W/kg
**SAR(1 g) = 7.42 W/kg; SAR(10 g) = 2.05 W/kg**
Smallest distance from peaks to all points 3 dB below = 7.2 mm
Ratio of SAR at M2 to SAR at M1 = 63.4%
Maximum value of SAR (measured) = 18.4 W/kg

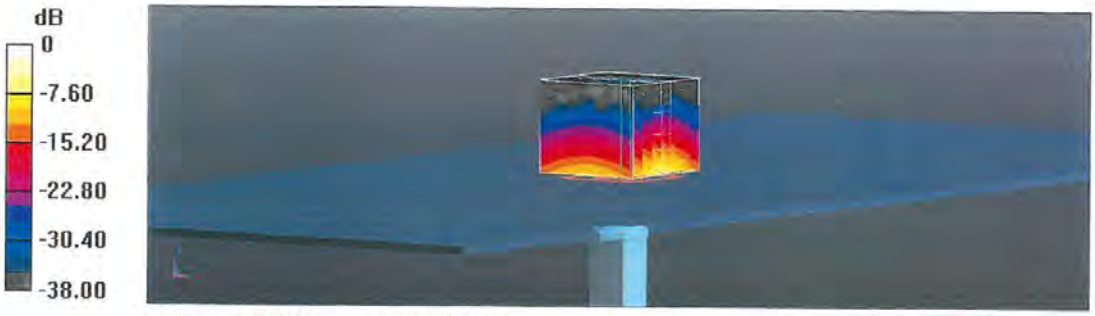

0 dB = 19.6 W/kg = 12.92 dBW/kg




This test report is prohibited to copy or reissue in whole or in part without the approval of Dt&C Co., Ltd.

## Impedance Measurement Plot for Body TSL

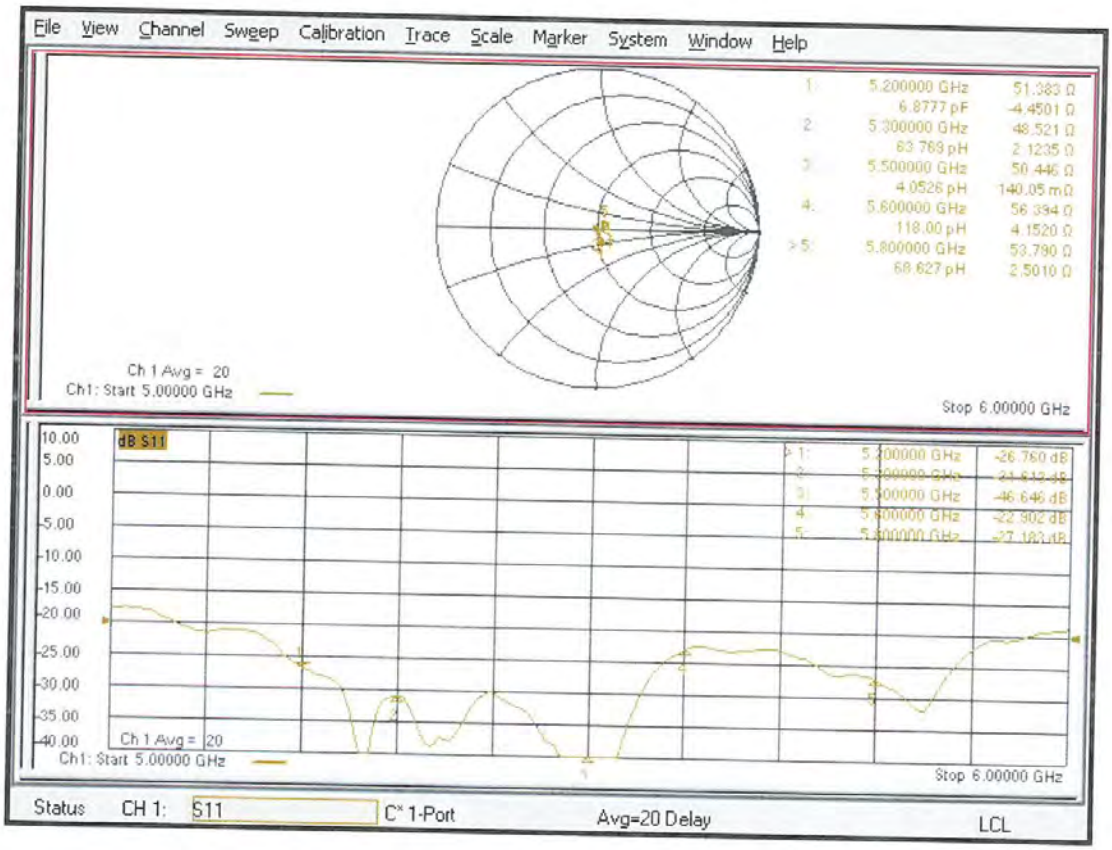




This test report is prohibited to copy or reissue in whole or in part without the approval of Dt&C Co., Ltd.

**Calibration Laboratory of**
Schmid & Partner
Engineering AG
**Zeughausstrasse 43, 8004 Zurich, Switzerland**

**S** Schweizerischer Kalibrierdienst
**C** Service suisse d'étalonnage
Servizio svizzero di taratura
**S** Swiss Calibration Service

Accredited by the Swiss Accreditation Service (SAS)
**The Swiss Accreditation Service is one of the signatories to the EA Multilateral Agreement for the recognition of calibration certificates**

**Accreditation No.: SCS 0108**

**Client** DT&C (Dymstec)

**Certificate No: CLA13-1030_Nov22**

# CALIBRATION CERTIFICATE

| | |
|---|---|
| Object | CLA13 - SN: 1030 |
| Calibration procedure(s) | QA CAL-15.v9<br>Calibration Procedure for SAR Validation Sources below 700 MHz |
| Calibration date: | November 07, 2022 |

This calibration certificate documents the traceability to national standards, which realize the physical units of measurements (SI).
The measurements and the uncertainties with confidence probability are given on the following pages and are part of the certificate.

All calibrations have been conducted in the closed laboratory facility: environment temperature (22 ± 3)°C and humidity < 70%.

Calibration Equipment used (M&TE critical for calibration)

| Primary Standards | ID # | Cal Date (Certificate No.) | Scheduled Calibration |
|---|---|---|---|
| Power meter NRP | SN: 104778 | 04-Apr-22 (No. 217-03525/03524) | Apr-23 |
| Power sensor NRP-Z91 | SN: 103244 | 04-Apr-22 (No. 217-03524) | Apr-23 |
| Power sensor NRP-Z91 | SN: 103245 | 04-Apr-22 (No. 217-03525) | Apr-23 |
| Reference 20 dB Attenuator | SN: CC2552 (20x) | 04-Apr-22 (No. 217-03527) | Apr-23 |
| Type-N mismatch combination | SN: 310982 / 06327 | 04-Apr-22 (No. 217-03528) | Apr-23 |
| Reference Probe EX3DV4 | SN: 3877 | 31-Dec-21 (No. EX3-3877_Dec21) | Dec-22 |
| DAE4 | SN: 654 | 26-Jan-22 (No. DAE4-654_Jan22) | Jan-23 |

| Secondary Standards | ID # | Check Date (in house) | Scheduled Check |
|---|---|---|---|
| Power meter E4419B | SN: GB41293874 | 06-Apr-16 (in house check Jun-22) | In house check: Jun-24 |
| Power sensor E4412A | SN: MY41498087 | 06-Apr-16 (in house check Jun-22) | In house check: Jun-24 |
| Power sensor E4412A | SN: 000110210 | 06-Apr-16 (in house check Jun-22) | In house check: Jun-24 |
| RF generator HP 8648C | SN: US3642U01700 | 04-Aug-99 (in house check Jun-22) | In house check: Jun-24 |
| Network Analyzer Agilent E8358A | SN: US41080477 | 31-Mar-14 (in house check Oct-22) | In house check: Oct-24 |

| | Name | Function | Signature |
|---|---|---|---|
| Calibrated by: | Aidonia Georgiadou | Laboratory Technician | |
| Approved by: | Sven Kühn | Technical Manager | |

Issued: November 10, 2022

This calibration certificate shall not be reproduced except in full without written approval of the laboratory.



This test report is prohibited to copy or reissue in whole or in part without the approval of Dt&C Co., Ltd.

**Calibration Laboratory of**
Schmid & Partner
Engineering AG
**Zeughausstrasse 43, 8004 Zurich, Switzerland**

**S** Schweizerischer Kalibrierdienst
**C** Service suisse d'étalonnage
Servizio svizzero di taratura
**S** Swiss Calibration Service

Accredited by the Swiss Accreditation Service (SAS)
**The Swiss Accreditation Service is one of the signatories to the EA Multilateral Agreement for the recognition of calibration certificates**

**Accreditation No.: SCS 0108**

**Glossary:**

| | |
|---|---|
| TSL | tissue simulating liquid |
| ConvF | sensitivity in TSL / NORM x,y,z |
| N/A | not applicable or not measured |

**Calibration is Performed According to the Following Standards:**

a) IEC/IEEE 62209-1528, "Measurement Procedure For The Assessment Of Specific Absorption Rate Of Human Exposure To Radio Frequency Fields From Hand-Held And Body-Worn Wireless Communication Devices - Part 1528: Human Models, Instrumentation And Procedures (Frequency Range of 4 MHz to 10 GHz)", October 2020.
b) KDB 865664, "SAR Measurement Requirements for 100 MHz to 6 GHz"

**Additional Documentation:**

c) DASY System Handbook

**Methods Applied and Interpretation of Parameters:**

- *Measurement Conditions:* Further details are available from the Validation Report at the end of the certificate. All figures stated in the certificate are valid at the frequency indicated.
- *Antenna Parameters with TSL:* The source is mounted in a touch configuration below the center marking of the flat phantom.
- *Return Loss:* This parameter is measured with the source positioned under the liquid filled phantom (as described in the measurement condition clause). The Return Loss ensures low reflected power. No uncertainty required.
- *SAR measured:* SAR measured at the stated antenna input power.
- *SAR normalized:* SAR as measured, normalized to an input power of 1 W at the antenna connector.
- *SAR for nominal TSL parameters:* The measured TSL parameters are used to calculate the nominal SAR result.

The reported uncertainty of measurement is stated as the standard uncertainty of measurement multiplied by the coverage factor k=2, which for a normal distribution corresponds to a coverage probability of approximately 95%.



This test report is prohibited to copy or reissue in whole or in part without the approval of Dt&C Co., Ltd.

## Measurement Conditions

DASY system configuration, as far as not given on page 1.

| | | |
|---|---|---|
| **DASY Version** | DASY5 | V52.10.4 |
| **Extrapolation** | Advanced Extrapolation | |
| **Phantom** | ELI4 Flat Phantom | Shell thickness: 2 ± 0.2 mm |
| **EUT Positioning** | Touch Position | |
| **Zoom Scan Resolution** | dx, dy = 4.0 mm, dz = 1.4 mm | Graded Ratio = 1.4 (Z direction) |
| **Frequency** | 13 MHz ± 1 MHz | |

## Head TSL parameters

The following parameters and calculations were applied.

| | **Temperature** | **Permittivity** | **Conductivity** |
|---|---|---|---|
| **Nominal Head TSL parameters** | 22.0 °C | 55.0 | 0.75 mho/m |
| **Measured Head TSL parameters** | (22.0 ± 0.2) °C | 53.6 ± 6 % | 0.74 mho/m ± 6 % |
| **Head TSL temperature change during test** | < 0.5 °C | ---- | ---- |

## SAR result with Head TSL

| **SAR averaged over 1 cm³ (1 g) of Head TSL** | Condition | |
|---|---|---|
| SAR measured | 1 W input power | 0.534 W/kg |
| SAR for nominal Head TSL parameters | normalized to 1W | **0.536 W/kg ± 18.4 % (k=2)** |

| **SAR averaged over 10 cm³ (10 g) of Head TSL** | condition | |
|---|---|---|
| SAR measured | 1 W input power | 0.335 W/kg |
| SAR for nominal Head TSL parameters | normalized to 1W | **0.337 W/kg ± 18.0 % (k=2)** |



This test report is prohibited to copy or reissue in whole or in part without the approval of Dt&C Co., Ltd.

## Appendix (Additional assessments outside the scope of SCS 0108)

### Antenna Parameters with Head TSL

| | |
|---|---|
| Impedance, transformed to feed point | 47.1 Ω + 1.5 jΩ |
| Return Loss | - 29.3 dB |

### Additional EUT Data

| | |
|---|---|
| Manufactured by | SPEAG |



This test report is prohibited to copy or reissue in whole or in part without the approval of Dt&C Co., Ltd.

## DASY5 Validation Report for Head TSL

Date: 07.11.2022

Test Laboratory: SPEAG, Zurich, Switzerland

**DUT: CLA13; Type: CLA13; Serial: CLA13 - SN: 1030**

Communication System: UID 0 - CW; Frequency: 13 MHz
Medium parameters used: f = 13 MHz; $\sigma$ = 0.74 S/m; $\varepsilon_r$ = 53.6; $\rho$ = 1000 kg/m$^3$
Phantom section: Flat Section
Measurement Standard: DASY5 (IEEE/IEC/ANSI C63.19-2007)

DASY52 Configuration:

- Probe: EX3DV4 - SN3877; ConvF(15.33, 15.33, 15.33) @ 13 MHz; Calibrated: 31.12.2021
- Sensor-Surface: 1.4mm (Mechanical Surface Detection)
- Electronics: DAE4 Sn654; Calibrated: 26.01.2022
- Phantom: ELI v4.0; Type: QDOVA001BB; Serial: TP:1003
- DASY52 52.10.4(1535); SEMCAD X 14.6.14(7501)

**CLA Calibration for HSL-LF Tissue/CLA-13, touch configuration, Pin=1W/Zoom Scan, dist=1.4mm (8x10x8)/Cube 0:** Measurement grid: dx=4mm, dy=4mm, dz=1.4mm
Reference Value = 29.81 V/m; Power Drift = 0.01 dB
Peak SAR (extrapolated) = 1.06 W/kg
**SAR(1 g) = 0.534 W/kg; SAR(10 g) = 0.335 W/kg**
Smallest distance from peaks to all points 3 dB below: Larger than measurement grid (> 14 mm)
Ratio of SAR at M2 to SAR at M1 = 79%
Maximum value of SAR (measured) = 0.780 W/kg

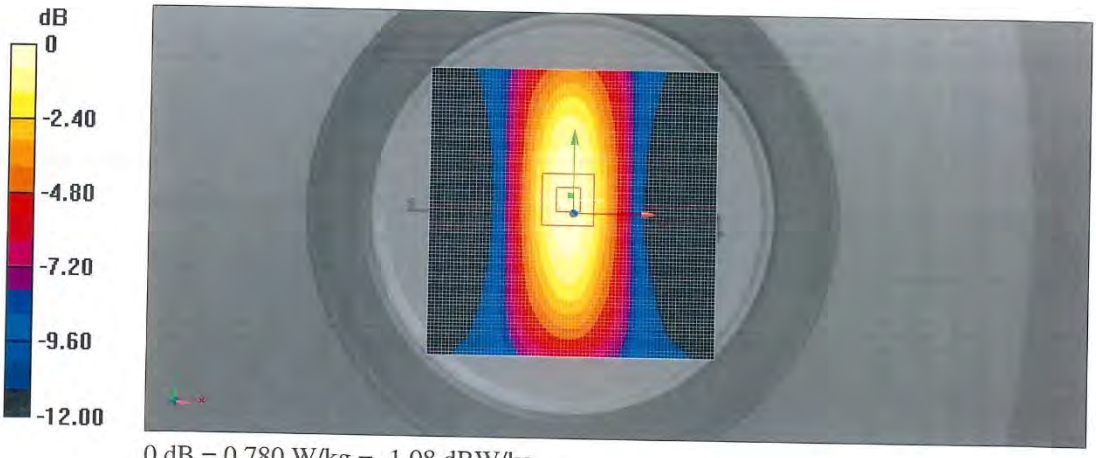


0 dB = 0.780 W/kg = -1.08 dBW/kg



This test report is prohibited to copy or reissue in whole or in part without the approval of Dt&C Co., Ltd.

## Impedance Measurement Plot for Head TSL

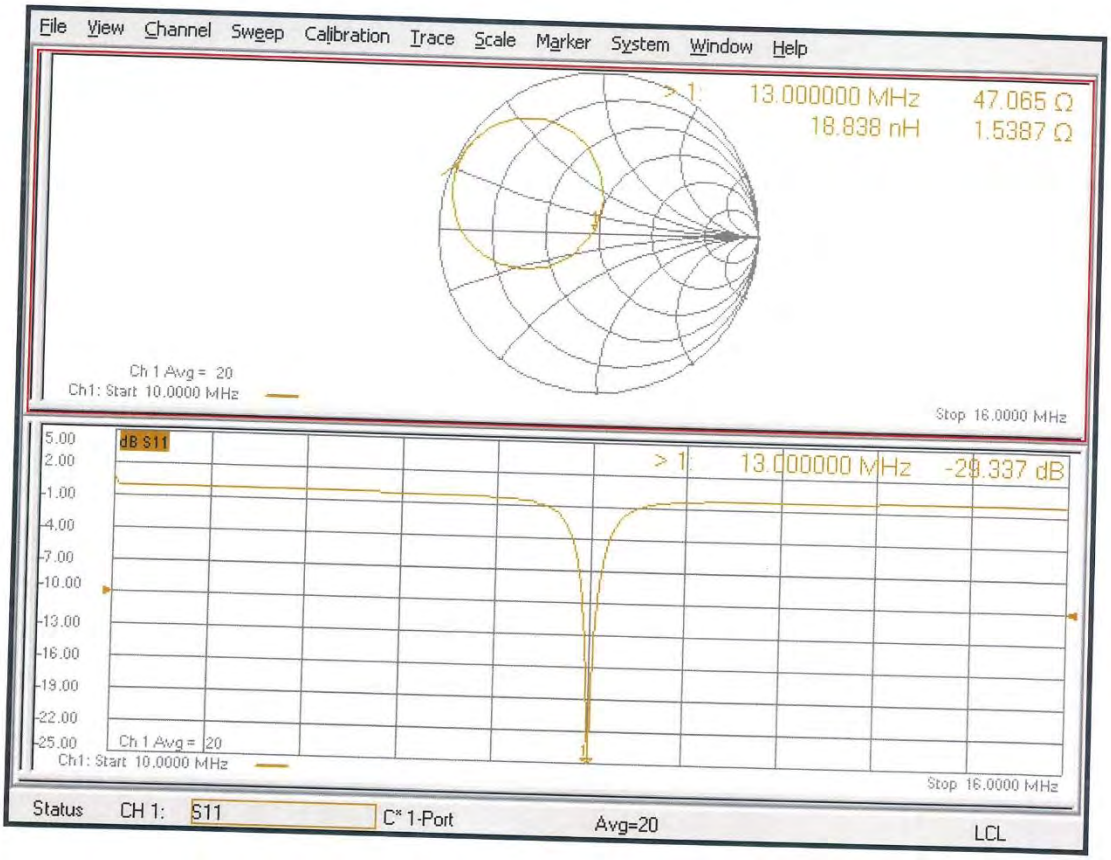




This test report is prohibited to copy or reissue in whole or in part without the approval of Dt&C Co., Ltd.

# APPENDIX C. – SAR Tissue Specifications

The brain and muscle mixtures consist of a viscous gel using hydrox-ethylcellulose (HEC) gelling agent and saline solution (see Table 3.1). Preservation with a bactericide is added and visual inspection is made to make sure air bubbles are not trapped during the mixing process. The mixture is calibrated to obtain proper dielectric constant (permittivity) and conductivity of the desired tissue. The mixture characterizations used for the brain and muscle tissue simulating liquids are according to the data by C. Gabriel and G. Harts grove.

**Figure 3.9 Simulated Tissue**

**Table C.1 Composition of the Tissue Equivalent Matter**

| Ingredients (% by weight) | Frequency (MHz) | | | | | | | |
|---|---|---|---|---|---|---|---|---|
| | 835 | | 1900 | | 2450 | | 5200 ~ 5800 | |
| Tissue Type | Head | Body | Head | Body | Head | Body | Head | Body |
| Water | 40.19 | 50.75 | 55.24 | 70.23 | 71.88 | 73.40 | 65.52 | 80.00 |
| Salt (NaCl) | 1.480 | 0.940 | 0.310 | 0.290 | 0.160 | 0.060 | - | - |
| Sugar | 57.90 | 48.21 | - | - | - | - | - | - |
| HEC | 0.250 | - | - | - | - | - | - | - |
| Bactericide | 0.180 | 0.100 | - | - | - | - | - | - |
| Triton X-100 | - | - | - | - | 19.97 | - | 17.24 | - |
| DGBE | - | - | 44.45 | 29.48 | 7.990 | 26.54 | - | - |
| Diethylene glycol hexyl ether | - | - | - | - | - | - | 17.24 | - |
| Polysorbate (Tween) 80 | - | - | - | - | - | - | | 20.00 |
| Target for Dielectric Constant | 41.5 | 55.2 | 40.0 | 53.3 | 39.2 | 52.7 | - | - |
| Target for Conductivity (S/m) | 0.90 | 0.97 | 1.40 | 1.52 | 1.80 | 1.95 | - | - |

| | | | |
|---|---|---|---|
| Salt: | 99 % Pure Sodium Chloride | Sugar: | 98 % Pure Sucrose |
| Water: | De-ionized, 16M resistivity | HEC: | Hydroxyethyl Cellulose |
| DGBE: | 99 % Di(ethylene glycol) butyl ether,[2-(2-butoxyethoxy) ethanol] | | |
| Triton X-100(ultra pure): | Polyethylene glycol mono[4-(1,1,3,3-tetramethylbutyl)phenyl] ether | | |

This test report is prohibited to copy or reissue in whole or in part without the approval of Dt&C Co., Ltd.

**Table C.2 HSL/MSL750 (Head and Body liquids for 700 – 800 MHz)**

| Item | Head Tissue Simulation Liquids HSL750<br>Muscle (body) Tissue Simulation Liquids MSL750 |
|---|---|
| Type No | SL AAH 075, SL AAM 075 |
| Manufacturer | SPEAG |
| The item is composed of the following ingredients: | |
| $H^2O$ | Water, 35 – 58% |
| Sucrose | Sucrose, 40 – 60% |
| NaCl | Sodium Chloride, 0 – 6% |
| Hydroxyethyl-cellulose | Medium Viscosity (CAS# 9004-62-0), < 0.3% |
| Preventol-D7 | Preservative: aqueous preparation, (CAS# 55965-84-9), containing 5-chloro-2-methyl-3(2H)-isothiazolone and 2-methyyl-3(2H)-isothiazolone, 0.1 – 0.6% |

**Table C.3 HSL/MSL1750 (Head and Body liquids for 1700 – 1800 MHz)**

| Item | Head Tissue Simulation Liquids HSL1750<br>Muscle (body) Tissue Simulation Liquids MSL1750 |
|---|---|
| Type No | SL AAH 175, SL AAM 175 |
| Manufacturer | SPEAG |
| The item is composed of the following ingredients: | |
| $H^2O$ | Water, 52 – 75% |
| C8H18O3 | Diethylene glycol monobutyl ether (DGBE), 25 – 48% |
| NaCl | Sodium Chloride, < 1.0% |

This test report is prohibited to copy or reissue in whole or in part without the approval of Dt&C Co., Ltd.

## Head Tissue 4 MHz ~ 250 MHz Simulating Liquids

Schmid & Partner Engineering AG

s p e a g

Zeughausstrasse 43, 8004 Zurich, Switzerland
Phone +41 44 245 9700, Fax +41 44 245 9779
www.speag.swiss, info@speag.swiss

### Measurement Certificate / Material Test

| | |
|---|---|
| Item Name | **Head Tissue Simulating Liquid (HBBL4-250V3)** |
| Product No. | SL AAH 005 AD (Batch: 221018-2) |
| Manufacturer | SPEAG |

**Measurement Method**

TSL dielectric parameters measured using calibrated DAK probe.

**Setup Validation**

Validation results were within ± 2.5% towards the target values of Methanol.

**Target Parameters**

Target parameters as defined in the IEEE 1528 and IEC 62209 compliance standards.

**Test Condition**

| | |
|---|---|
| Ambient | Environment temperatur (22 ± 3)°C and humidity < 70%. |
| TSL Temperature | 22°C |
| Test Date | 20-Oct-22 |
| Operator | WM |

**Additional Information**

| | |
|---|---|
| TSL Density | 1.042 g/cm3 |
| TSL Heat-capacity | 3.574 kJ/(kg*K) |

| | Measured | | | Target | | Diff.to Target [%] | |
|---|---|---|---|---|---|---|---|
| f [MHz] | ε' | ε'' | sigma | eps | sigma | Δ-eps | Δ-sigma |
| 5 | 53.6 | 2611.49 | 0.73 | 55.5 | 0.75 | -3.3 | -2.7 |
| 10 | 53.9 | 1306.12 | 0.73 | 55.5 | 0.75 | -2.8 | -2.7 |
| 15 | 53.8 | 871.51 | 0.73 | 55.3 | 0.75 | -2.8 | -2.7 |
| 20 | 53.7 | 654.22 | 0.73 | 55.1 | 0.75 | -2.6 | -2.7 |
| 25 | 53.6 | 523.68 | 0.73 | 55.0 | 0.75 | -2.5 | -2.7 |
| 30 | 53.5 | 437.01 | 0.73 | 55.0 | 0.75 | -2.7 | -2.7 |
| 35 | 53.4 | 375.00 | 0.73 | 54.9 | 0.75 | -2.7 | -2.7 |
| 40 | 53.2 | 328.52 | 0.73 | 54.8 | 0.75 | -2.9 | -2.7 |
| 45 | 53.1 | 292.40 | 0.73 | 54.7 | 0.75 | -2.9 | -2.7 |
| 50 | 53.0 | 263.53 | 0.73 | 54.6 | 0.75 | -2.8 | -2.7 |
| 55 | 52.8 | 239.94 | 0.73 | 54.4 | 0.75 | -3.0 | -2.8 |
| 60 | 52.7 | 220.31 | 0.74 | 54.3 | 0.75 | -3.0 | -1.5 |
| 65 | 52.5 | 203.73 | 0.74 | 54.2 | 0.75 | -3.2 | -1.6 |
| 70 | 52.4 | 189.53 | 0.74 | 54.1 | 0.75 | -3.1 | -1.6 |
| 75 | 52.3 | 177.24 | 0.74 | 54.0 | 0.75 | -3.1 | -1.7 |
| 80 | 52.2 | 166.49 | 0.74 | 53.9 | 0.75 | -3.1 | -1.7 |
| 85 | 52.1 | 157.02 | 0.74 | 53.8 | 0.75 | -3.1 | -1.8 |
| 90 | 52.0 | 148.61 | 0.74 | 53.7 | 0.75 | -3.1 | -1.9 |
| 95 | 51.9 | 141.10 | 0.75 | 53.5 | 0.75 | -3.1 | 0.6 |
| 100 | 51.8 | 134.35 | 0.75 | 53.4 | 0.75 | -3.1 | -0.6 |
| 105 | 51.7 | 128.25 | 0.75 | 53.3 | 0.76 | -3.0 | -0.7 |
| 110 | 51.6 | 122.71 | 0.75 | 53.2 | 0.76 | -3.0 | -0.7 |
| 115 | 51.5 | 117.65 | 0.75 | 53.1 | 0.76 | -3.0 | -0.8 |
| 120 | 51.4 | 113.03 | 0.75 | 53.0 | 0.76 | -3.0 | -0.9 |
| 125 | 51.2 | 108.77 | 0.76 | 52.9 | 0.76 | -3.1 | 0.4 |
| 130 | 51.1 | 104.85 | 0.76 | 52.8 | 0.76 | -3.1 | 0.4 |
| 135 | 51.0 | 101.22 | 0.76 | 52.6 | 0.76 | -3.1 | 0.3 |
| 140 | 50.9 | 97.86 | 0.76 | 52.5 | 0.76 | -3.1 | 0.2 |
| 145 | 50.8 | 94.73 | 0.76 | 52.4 | 0.76 | -3.1 | 0.2 |
| 150 | 50.8 | 91.82 | 0.77 | 52.3 | 0.76 | -2.9 | 1.5 |
| 155 | 50.7 | 89.09 | 0.77 | 52.1 | 0.76 | -2.6 | 1.0 |
| 160 | 50.6 | 86.54 | 0.77 | 51.8 | 0.77 | -2.4 | 0.5 |
| 165 | 50.5 | 84.15 | 0.77 | 51.6 | 0.77 | -2.1 | 0.0 |
| 170 | 50.4 | 81.90 | 0.77 | 51.4 | 0.77 | -1.9 | -0.5 |
| 175 | 50.3 | 79.78 | 0.78 | 51.1 | 0.78 | -1.6 | 0.4 |
| 180 | 50.2 | 77.78 | 0.78 | 50.9 | 0.78 | -1.4 | -0.1 |
| 185 | 50.1 | 75.88 | 0.78 | 50.7 | 0.78 | -1.1 | -0.6 |
| 190 | 50.0 | 74.10 | 0.78 | 50.4 | 0.79 | -0.9 | -1.0 |
| 195 | 49.9 | 72.41 | 0.79 | 50.2 | 0.79 | -0.6 | -0.2 |
| 200 | 49.8 | 70.80 | 0.79 | 50.0 | 0.80 | -0.3 | -0.7 |
| 205 | 49.8 | 69.27 | 0.79 | 49.7 | 0.80 | 0.1 | -1.2 |
| 210 | 49.7 | 67.82 | 0.79 | 49.5 | 0.80 | 0.4 | -1.6 |
| 215 | 49.6 | 66.43 | 0.79 | 49.3 | 0.81 | 0.7 | -2.1 |
| 220 | 49.5 | 65.11 | 0.80 | 49.0 | 0.81 | 1.0 | -1.3 |
| 225 | 49.4 | 63.85 | 0.80 | 48.8 | 0.81 | 1.2 | -1.7 |
| 230 | 49.4 | 62.64 | 0.80 | 48.6 | 0.82 | 1.7 | -2.1 |
| 235 | 49.3 | 61.49 | 0.80 | 48.3 | 0.82 | 2.0 | -2.6 |
| 240 | 49.2 | 60.38 | 0.81 | 48.1 | 0.82 | 2.3 | -1.8 |
| 245 | 49.1 | 59.32 | 0.81 | 47.9 | 0.83 | 2.6 | -2.2 |
| 250 | 49.0 | 58.31 | 0.81 | 47.6 | 0.83 | 2.9 | -2.7 |

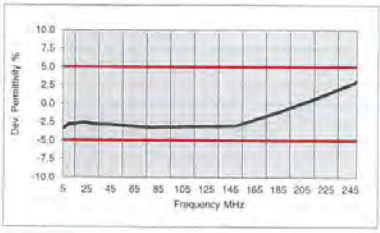


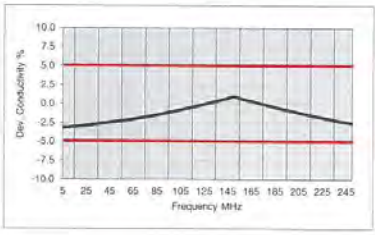




This test report is prohibited to copy or reissue in whole or in part without the approval of Dt&C Co., Ltd.

# APPENDIX D. – SAR SYSTEM VALIDATION

## SAR System Validation

Per FCC KDB 865664 D02v01r02, SAR system validation status should be documented to confirm measurement accuracy. The SAR systems (including SAR probes, system components and software versions) used for this device were validated against its performance specifications prior to the SAR measurements. Reference dipoles were used with the required tissue- equivalent media for system validation, according to the procedures outlined in FCC KDB 865664 D01v01r04 and IEEE 1528-2013.Since SAR probe calibrations are frequency dependent, each probe calibration point was validated at a frequency within the valid frequency range of the probe calibration point, using the system that normally operates with the probe for routine SAR measurements and according to the required tissue-equivalent media.

A tabulated summary of the system validation status including the validation date(s), measurement frequencies, SAR probes and tissue dielectric parameters has been included.

**Table D.1 SAR System Validation Summary**

| SAR System | Freq. [MHz] | Date | Probe SN | Probe Type | Probe CAL. Point | | PERM. | COND. | CW Validation | | | MOD. Validation | | |
|---|---|---|---|---|---|---|---|---|---|---|---|---|---|---|
| | | | | | | | (εr) | (σ) | Sensi-tivity | Probe Linearity | Probe Isortopy | MOD. Type | Duty Factor | PAR |
| F | 750 | 2023.05.18 | 3866 | EX3DV4 | 750 | Head | 41.906 | 0.886 | PASS | PASS | PASS | N/A | N/A | N/A |
| B | 835 | 2023.05.10 | 7337 | EX3DV4 | 835 | Head | 41.029 | 0.896 | PASS | PASS | PASS | GMSK | PASS | N/A |
| F | 835 | 2023.05.18 | 3866 | EX3DV4 | 835 | Head | 41.193 | 0.904 | PASS | PASS | PASS | GMSK | PASS | N/A |
| B | 1 800 | 2023.05.11 | 7337 | EX3DV4 | 1 800 | Head | 39.401 | 1.367 | PASS | PASS | PASS | N/A | N/A | N/A |
| F | 1 800 | 2023.05.19 | 3866 | EX3DV4 | 1 800 | Head | 40.104 | 1.369 | PASS | PASS | PASS | N/A | N/A | N/A |
| B | 1 900 | 2023.05.11 | 7337 | EX3DV4 | 1 900 | Head | 39.188 | 1.419 | PASS | PASS | PASS | GMSK | PASS | N/A |
| F | 1 900 | 2023.05.19 | 3866 | EX3DV4 | 1 900 | Head | 40.064 | 1.387 | PASS | PASS | PASS | GMSK | PASS | N/A |
| F | 2 450 | 2023.05.22 | 3866 | EX3DV4 | 2 450 | Head | 38.691 | 1.843 | PASS | PASS | PASS | OFDM/TDD | PASS | PASS |
| F | 2 600 | 2023.05.23 | 3866 | EX3DV4 | 2 600 | Head | 39.258 | 1.963 | PASS | PASS | PASS | TDD | PASS | N/A |
| F | 5 300 | 2023.05.24 | 3866 | EX3DV4 | 5 300 | Head | 36.142 | 4.766 | PASS | PASS | PASS | OFDM | N/A | PASS |
| F | 5 500 | 2023.05.25 | 3866 | EX3DV4 | 5 500 | Head | 35.354 | 4.888 | PASS | PASS | PASS | OFDM | N/A | PASS |
| F | 5 600 | 2023.05.25 | 3866 | EX3DV4 | 5 600 | Head | 34.916 | 5.083 | PASS | PASS | PASS | OFDM | N/A | PASS |
| F | 5 800 | 2023.05.25 | 3866 | EX3DV4 | 5 800 | Head | 34.722 | 5.277 | PASS | PASS | PASS | OFDM | N/A | PASS |
| B | 13 | 2023.04.24 | 3916 | EX3DV4 | 13 | Head | 54.938 | 0.770 | PASS | PASS | PASS | ASK | N/A | PASS |

NOTE: While the probes have been calibrated for both a CW and modulated signals, all measurements were performed using communication systems calibrated for CW signals only. Modulations in the table above represent test configurations for which the measurement system has been validated per FCC KDB Publication 865664 D01v01r04 for scenarios when CW probe calibrations are used with other signal types. SAR systems were validated for modulated signals with a periodic duty cycle, such as GMSK, or with a high peak to average ratio (>5 dB), such as OFDM according to KDB 865664.

This test report is prohibited to copy or reissue in whole or in part without the approval of Dt&C Co., Ltd.

# APPENDIX E. – Description of Test Equipment

This test report is prohibited to copy or reissue in whole or in part without the approval of Dt&C Co., Ltd.

## E.1 SAR Measurement Setup

Measurements are performed using the DASY5 automated dosimetric assessment system. The DASY5 is made by Schmid & Partner Engineering AG (SPEAG) in Zurich, Switzerland and consists of high precision robotics system (Staubli), robot controller, desktop computer, near-field probe, probe alignment sensor, and the generic twin phantom containing the brain equivalent material. The robot is a six-axis industrial robot performing precise movements to position the probe to the location (points) of maximum electromagnetic field (EMF) (see Fig. E.1.1).

A cell controller system contains the power supply, robot controller each pendant (Joystick), and a remote control used to drive the robot motors. The PC consists of the Intel Xeon W-2255 3.70 GHz desktop computer with Windows 7 system and SAR Measurement Software DASY5,A/D interface card, monitor, mouse, and keyboard. The Staubli Robotis connected to the cell controller to allow software manipulation of the robot. A data acquisition electronic (DAE) circuit that performs the signal amplification, signal multiplexing, AD-conversion, offset measurements, mechanical surface detection, collision detection, etc. is connected to the Electro-optical coupler (EOC). The EOC performs the conversion from the optical into digital electric signal of the DAE and transfers data to the PC plug-in card.

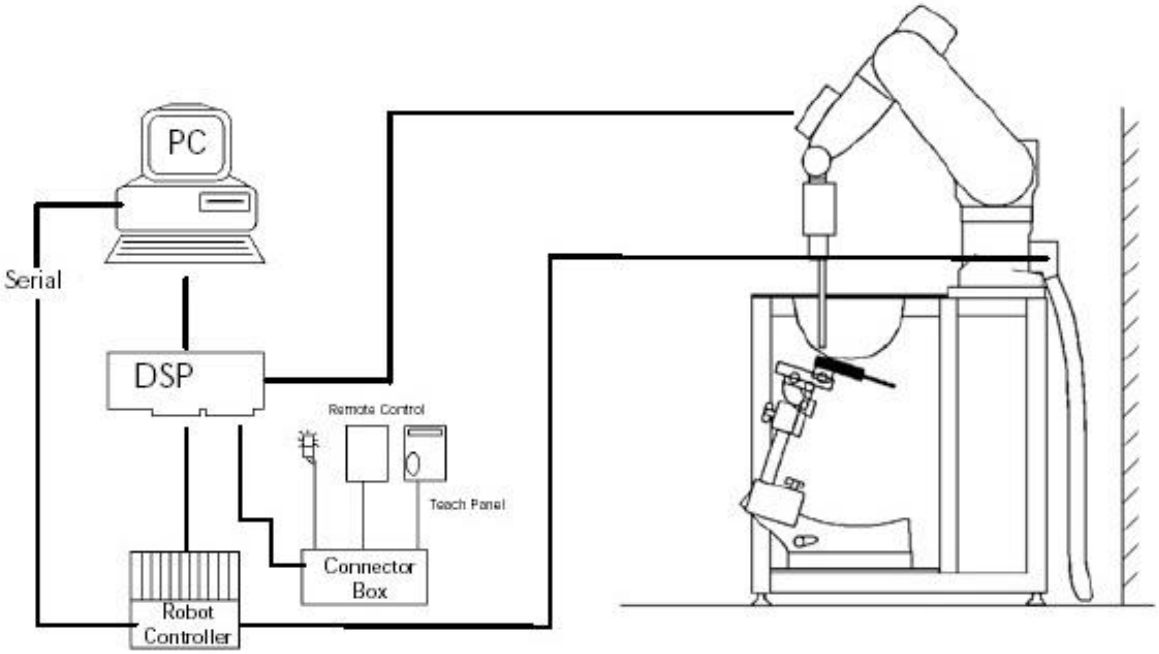


**Figure E.1.1 SAR Measurement System Setup**

The DAE4 consists of a highly sensitive electrometer-grade preamplifier with auto-zeroing, a channel and gain-switching multiplexer, a fast 16 bit AD-converter and a command decoder and control logic unit. Transmission to the PC-card is accomplished through an optical downlink for data and status information and an optical uplink for commands and clock lines. The mechanical probe mounting device includes two different sensor systems for frontal and sidewise probe contacts. They are also used for mechanical surface detection and probe collision detection. The robot uses its own controller with a built in VME-bus computer. The system is described in detail.

This test report is prohibited to copy or reissue in whole or in part without the approval of Dt&C Co., Ltd.

## E.2 Probe Specification

| | | |
|---|---|---|
| **Frequency** | 4 MHz to 10 GHz | |
| **Linearity** | ±0.2 dB(30 MHz to 10 GHz) | |
| **Dynamic** | 10 μW/g to > 100 mW/g | |
| **Range** | Linearity : | ±0.2 dB |
| **Dimensions** | Overall length : | 337 mm |
| **Tip length** | 20 mm | |
| **Body diameter** | 12 mm | |
| **Tip diameter** | 3.9 mm/2.5 mm | |
| **Distance from probe tip to sensor center** | 2.0 mm/1.0 mm | |
| **Application** | SAR Dosimetry Testing<br>Compliance tests of mobile phones | |

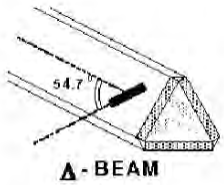


**Figure E.2.1 Triangular Probe Configurations**

**Figure E.2.2 Probe Thick-Film Technique**

**DAE System**

The SAR measurements were conducted with the dosimetric probe EX3DV4 designed in the classical triangular configuration (see E.2.1) and optimized for dosimetric evaluation. The probe is constructed using the thick film technique; with printed resistive lines on ceramic substrates. The probe is equipped with an optical multitier line ending at the front of the probe tip. It is connected to the EOC box on the robot arm and provides an automatic detection of the phantom surface. Half of the fibers are connected to a pulsed infrared transmitter, the other half to a synchronized receiver. As the probe approaches the surface, the reflection from the surface produces a coupling from the transmitting to the receiving fibers. This reflection increases first during the approach, reaches maximum and then decreases. If the probe is flatly touching the surface, the coupling is zero. The distance of the coupling maximum to the surface is independent of the surface reflectivity and largely independent of the surface to probe angle. The DASY5 software reads the reflection during a software approach and looks for the maximum using a 2nd order fitting. The approach is stopped at reaching the maximum.

This test report is prohibited to copy or reissue in whole or in part without the approval of Dt&C Co., Ltd.

## E.3 E-Probe Calibration Process

### Dosimetric Assessment Procedure

Each probe is calibrated according to a dosimetric assessment procedure with accuracy better than ±10 %. The spherical isotropy was evaluated with the procedure and found to be better than ±0.25 dB. The sensitivity parameters (Norm X, Norm Y, Norm Z), the diode compression parameter (DCP) and the conversion factor (Conv F) of the probe is tested.

### Free Space Assessment

The free space E-field from amplified probe outputs is determined in a test chamber. This is performed in a TEM cell for frequencies below 1 GHz, and in a waveguide above 1GHz for free space. For the free space calibration, the probe is placed in the volumetric center of the cavity at the proper orientation with the field. The probe is then rotated 360 degrees.

### Temperature Assessment *

E-field temperature correlation calibration is performed in a flat phantom filled with the appropriate simulated brain tissue. The measured free space E-field in the medium, correlates to temperature rise in a dielectric medium. For temperature correlation calibration a RF transparent the remits or based temperature probe is used in conjunction with the E-field probe.

$$SAR = C\frac{\Delta T}{\Delta t}$$

where:

$\Delta t$ = exposure time (30 seconds),

C = heat capacity of tissue (brain or muscle),

$\Delta T$ = temperature increase due to RF exposure.

$$SAR = \frac{|E|^2 \cdot \sigma}{\rho}$$

where:

$\sigma$ = simulated tissue conductivity,

$\rho$ = Tissue density (1.25 g/cm$^3$ for brain tissue)

SAR is proportional to ΔT / Δt , the initial rate of tissue heating, before thermal diffusion takes place. Now it's possible to quantify the electric field in the simulated tissue by equating the thermally derived SAR to the E- field;

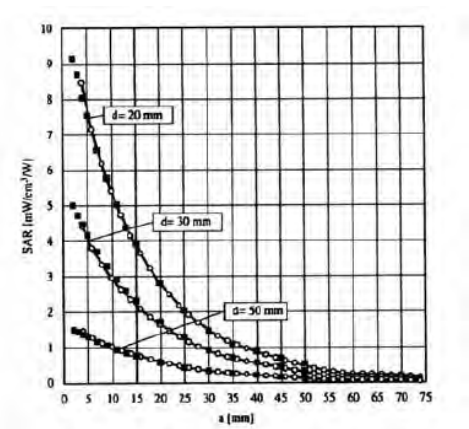


**Figure E.3.1 E-Field and Temperature Measurements at 900MHz**

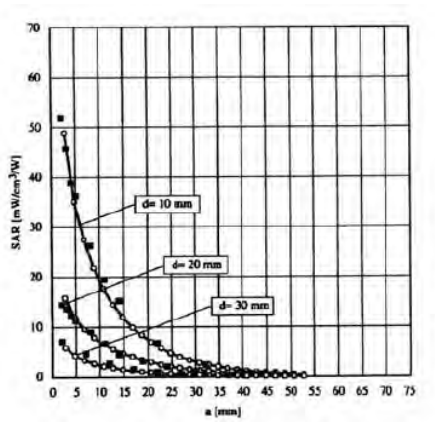


**Figure E.3.2 E-Field and Temperature Measurements at 1 800MHz**

### E.4 Data Extrapolation

The DASY5 software automatically executes the following procedures to calculate the field units from the microvolt readings at the probe connector. The first step of the evaluation is a linearization of the filtered input signal to account for the compression characteristics of the detector diode. The compensation depends on the input signal, the diode type and the DC-transmission factor from the diode to the evaluation electronics. If the exciting field is pulsed, the crest factor of the signal must be known to correctly compensate for peak power. The formula for each channel can be given like below;

$$V_i = U_i + U_i^2 \cdot \frac{cf}{dcp_i}$$

with $V_i$ = compensated signal of channel i (i=x,y,z)
$U_i$ = input signal of channel i (i=x,y,z)
cf = crest factor of exciting field (DASY parameter)
$dcp_i$ = diode compression point (DASY parameter)

From the compensated input signals the primary field data for each channel can be evaluated:

E-field probes:

$$E_i = \sqrt{\frac{V_i}{Norm_i \cdot ConvF}}$$

with $V_i$ = compensated signal of channel i (i = x,y,z)
$Norm_i$ = sensor sensitivity of channel i (i = x,y,z) $\mu V/(V/m)^2$ for E-field probes
ConvF = sensitivity of enhancement in solution
$E_i$ = electric field strength of channel i in V/m

The RSS value of the field components gives the total field strength (Hermetian magnitude):

$$E_{tot} = \sqrt{E_x^2 + E_y^2 + E_z^2}$$

The primary field data are used to calculate the derived field units.

$$SAR = E_{tot}^2 \cdot \frac{\sigma}{\rho \cdot 1000}$$

with SAR = local specific absorption rate in W/g
$E_{tot}$ = total field strength in V/m
σ = conductivity in [mho/m] or [Siemens/m]
ρ = equivalent tissue density in $g/cm^3$

The power flow density is calculated assuming the excitation field to be a free space field.

$$P_{pwe} = \frac{E_{tot}^2}{3770}$$

with $P_{pwe}$ = equivalent power density of a plane wave in $W/cm^2$
$E_{tot}$ = total electric field strength in V/m

## E.5 SAM Twin Phantom

The SAM Twin Phantom V5.0 is constructed of a fiberglass shell integrated in a wooden table. The shape of the shell is based on data from an anatomical study designed to determine the maximum exposure in at least 90% of all users. It enables the dosimetric evaluation of left and right hand phone usage as well as body mounted usage at the flat phantom region. A cover prevents the evaporation of the liquid.

Reference markings on the Phantom allow the complete setup of all predefined phantom positions and measurement grids by manually teaching three points in the robot. (see Fig. E.5.1)

**Figure E.5.1 SAM Twin Phantom**

### SAM Twin Phantom Specification:

| | |
|---|---|
| **Construction** | The shell corresponds to the specifications of the Specific Anthropomorphic Mannequin (SAM) phantom defined in IEEE 1528 and IEC 62209-1. It enables the dosimetric evaluation of left and right hand phone usage as well as body mounted usage at the flat phantom region. A cover prevents evaporation of the liquid. Reference markings on the phantom allow the complete setup of all predefined phantom positions and measurement grids by teaching three points with the robot.<br>Twin SAM V5.0 has the same shell geometry and is manufactured from the same material as Twin SAM V4.0, but has reinforced top structure. |
| **Shell Thickness** | (2 ± 0.2) mm |
| **Filling Volume** | Approx. 25 liters |
| **Dimensions** | Length: 1000 mm<br>Width: 500 mm<br>Height: adjustable feet |

### Specific Anthropomorphic Mannequin (SAM) Specifications:

The phantom for handset SAR assessment testing is a low-loss dielectric shell, with shape and dimensions derived from the anthropometric data of the 90th percentile adult male head dimensions as tabulated by the US Army. The SAM Twin Phantom shell is bisected along the mid-sagittal plane into right and left halves (see Fig. E.5.2). The perimeter sidewalls of each phantom halves are extended to allow filling with liquid to a depth that is sufficient to minimized reflections from the upper surface. The liquid depth is maintained at a minimum depth of 15cm to minimize reflections from the upper surface.

**Figure E.5.2 Sam Twin Phantom shell**

## E.6 ELI PHANTOM

Phantom for compliance testing of handheld and body-mounted wireless devices in the frequency range of 30 MHz to 6 GHz. ELI is fully compatible with the IEC 62209-2 standard and all known tissue simulating liquids. ELI has been optimized regarding its performance and can be integrated into our standard phantom tables. A cover prevents evaporation of the liquid.

Reference markings on the phantom allow installation of the complete setup, including all predefined phantom positions and measurement grids, by teaching three points. The phantom is compatible with all SPEAG dosimetric probes and dipoles. ELI V5.0 has the same shell geometry and is manufactured from the same material as ELI4, but has reinforced top structure. (see Fig. F.5.1)

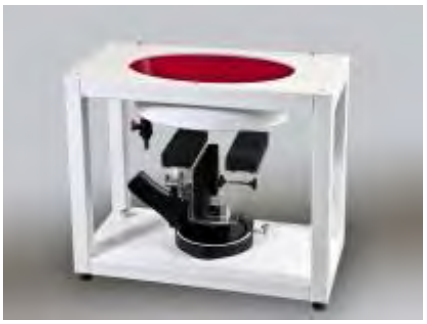

**Figure E.6.1 ELI Phantom**

**ELI Phantom Specification**

| | |
|---|---|
| **Shell Thickness** | (2.0 ± 0.2) mm (bottom plate) |
| **Dimensions** | Major axis: 600 mm, Minor: 400 mm |
| **Filling Volume** | Approx. 30 liters |

## E.7 Device Holder for Transmitters

In combination with the Twin SAM Phantom V4.0/V4.0c, V5.0 or ELI4, the Mounting Device enables the rotation of the mounted transmitter device in spherical coordinates. Rotation point is the ear opening point. Transmitter devices can be easily and accurately positioned according to IEC, IEEE, FCC or other specifications. The device holder can be locked for positioning at different phantom sections (left head, right head, flat).
Note: A simulating human hand is not used due to the complex anatomical and geometrical structure of the hand that may produce infinite number of configurations. To produce the worst-case condition (the hand absorbs antenna output power), the hand is omitted during the tests.

**Figure E.7.1 Mounting Device**

This test report is prohibited to copy or reissue in whole or in part without the approval of Dt&C Co., Ltd.

## E.8 Automated Test System Specifications

### Positioner

| | |
|---|---|
| **Robot** | Stäubli Unimation Corp. Robot Model: TX60L |
| **Repeatability** | 0.02 mm |
| **No. of axis** | 6 |

### Data Acquisition Electronic (DAE) System

#### Cell Controller

| | |
|---|---|
| **Processor** | Intel Xeon W-2255 |
| **Clock Speed** | 3.70 GHz |
| **Operating System** | Windows 7 Professional |
| **Data Card** | DASY5 PC-Board |

#### Data Converter

| | |
|---|---|
| **Features** | Signal, multiplexer, A/D converter. & control logic |
| **Software** | DASY5 |
| **Connecting Lines** | Optical downlink for data and status info<br>Optical uplink for commands and clock |

#### PC Interface Card

| | |
|---|---|
| **Function** | 24 bit (64 MHz) DSP for real time processing<br>Link to DAE 4<br>16 bit A/D converter for surface detection system<br>serial link to robot<br>direct emergency stop output for robot |

#### E-Field Probes

| | |
|---|---|
| **Model** | EX3DV4 S/N: 7337/3866/3916 |
| **Construction** | Triangular core fiber optic detection system |
| **Frequency** | 4 MHz to 10 GHz |
| **Linearity** | ±0.2 dB (30 MHz to 10 GHz) |

#### Phantom

| | |
|---|---|
| **Phantom** | SAM Twin Phantom (V5.0) |
| **Shell Material** | Composite |
| **Thickness** | (2.0 ± 0.2) mm |

**Figure E.8.1 DASY5 Test System**