LUTRON

Tape Light Solution

043611a

Installation Instructions

The instructions below provide an overview of installation for Lutron Tape Light. Installation may vary based on the specific layout of each tape light being installed.

Notes:

- For installation by a qualified electrician in accordance with all local and national electrical codes.
- Use copper conductors only
- For indoor use only
- DO NOT install if product has any visible damage
- If moisture or condensation is evident, allow the product to dry completely before installation
- Operate between 32 °F (0 °C) and 104 °F (40 °C) ambient
- 0% to 90% humidity, non-condensing

Component Installation:

Select a component to be taken to instructions for installation.

LED Tape	Power Interface	Wireless Controller

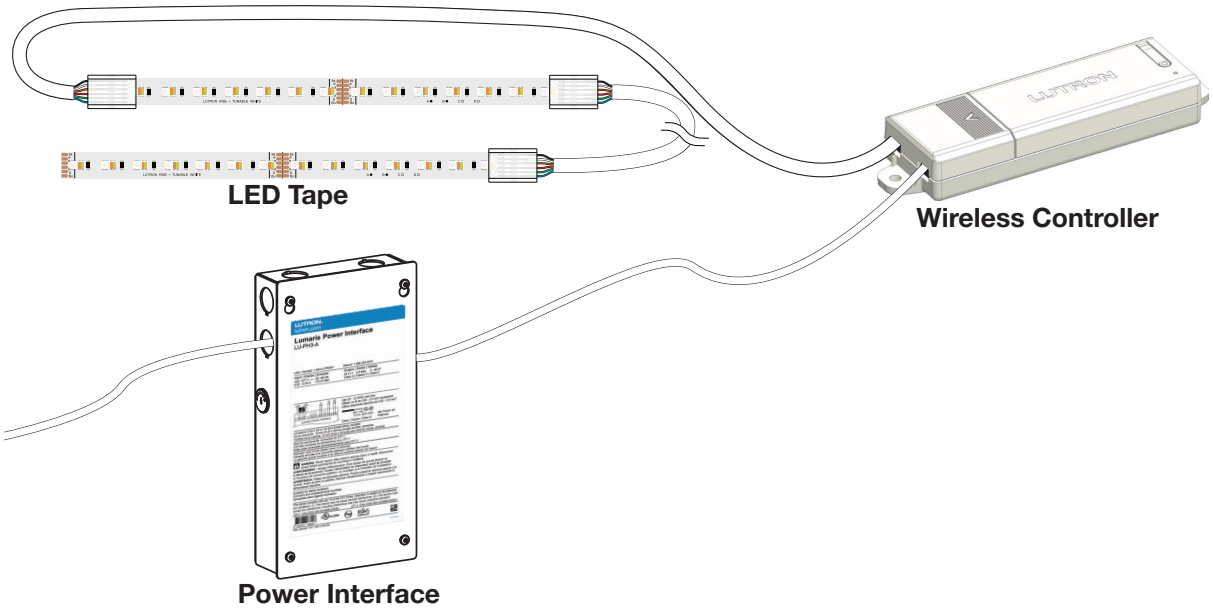

Additional Information:

Select the links below to be taken to the appropriate information

Components	Troubleshooting	General Information/ Contact Us	Channel Install Guide

Components

(may vary by model number)

Wireless Controller

RRL-MWCL-WH; HWL-MWCL-WH;
Input: 24 V⎓ 4 A
Output: 24 V⎓ 4 A 96 W

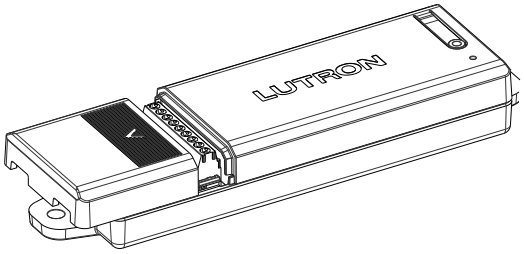

Power Interface

LU-PH3-A
Input: 120/277 V∼ 50/60 Hz
Output: 96 W 24 V⎓

LED Tape

LU-T05-RT-IN; LU-T30-RT-IN;

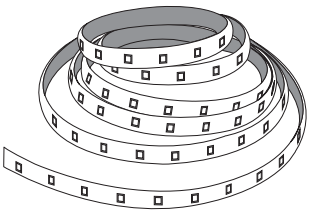

Accessories

Cable: LU-WK1-6W
Connectors: LU-CK1-6W

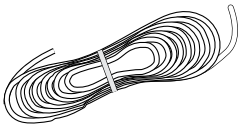

Cable

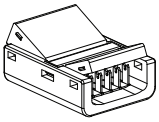

Connectors
Qty: 10

LED Tape Installation

1. If installing LED tape into an aluminum channel, follow the mounting instructions of the channel prior to installing the tape (optional).

2. Measure and cut the LED tape to the desired length at one of the marked locations ensuring that the cut is square to the tape.

   Note: If using tape-to-wire connectors, do not cut at the soldered pads. Connectors can NOT be used at locations with soldered pads.

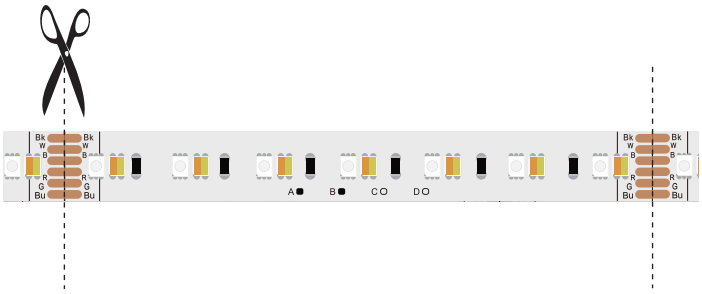

3. Clean the surface on which the LED tape will be adhered ensuring that it is dry and free of dust.

4. Peel the backing off the LED tape and attach the LED tape to the surface at a point that allows the LED tape to connect to the wireless controller. Press and hold for 10 seconds.

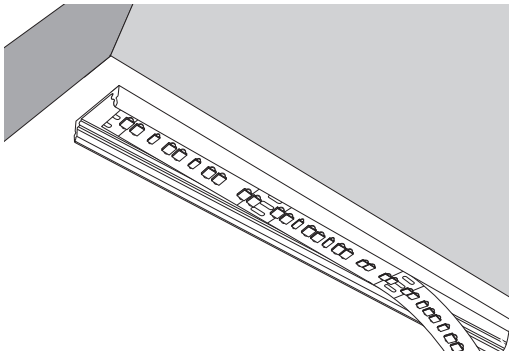

   a. The first section of tape is provided with soldered leads for convenience, but the tape may be started from any section by installing a wire-to-tape connector (see LED Tape Installation step 5).

   b. DO NOT twist of repeatedly bend the LED tape as this could cause damage to the connections in the tape itself.

   Note: Bend radius may not be tighter than 2 in (50 mm).

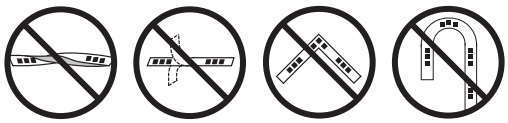

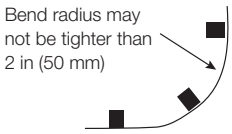

LED Tape Installation *(continued)*

5. Join additional sections of LED tape to the series (optional).

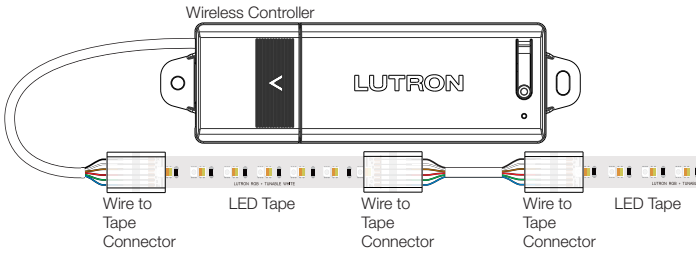

a. Measure and cut the length of cable needed to connect the tapes in their installed locations.

b. Insert the end of the LED tape into the connector. Close the connector using pliers.

Note: Align the edge of the connector with the printed line on the tape.

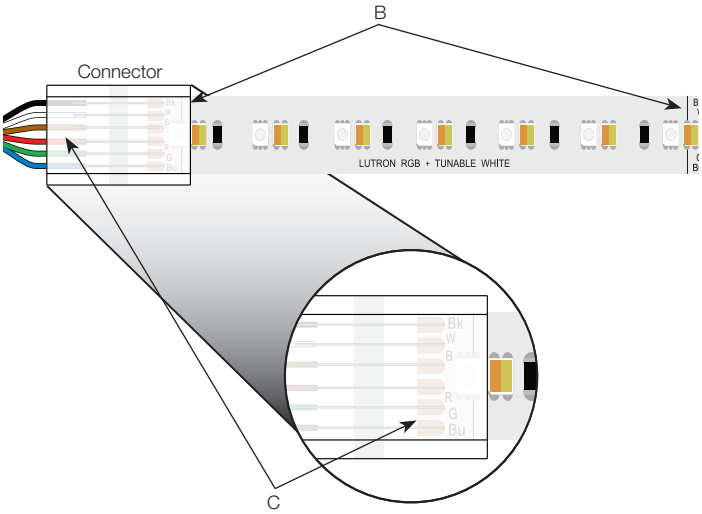

c. Insert **unstripped** 22 AWG (0.34 mm^2) wires into the wire holes in the connector ensuring to align the wire color to the appropriate channel on the tape.

Tape Marking	Wire Color
Bk	Black
W	White
B	Brown
R	Red
G	Green
Bu	Blue

d. Only 16.4 ft (5 m) of tape may be wired in series per controller. If more than 16.4 ft (5 m) of tape will be used, multiple runs of tape should be wired in parallel.

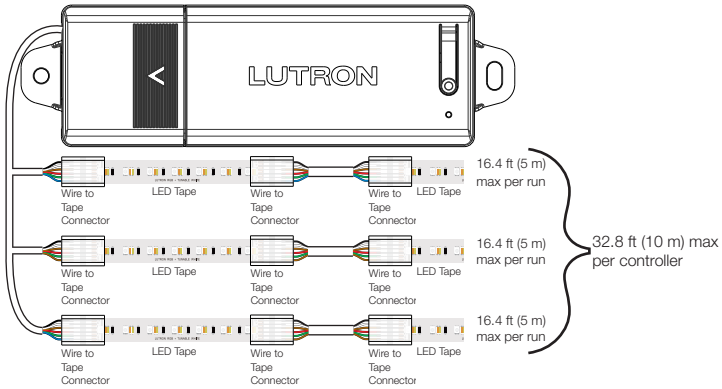

Power Interface Installation

WARNING: SHOCK HAZARD. May result in Serious Injury or Death. Disconnect power before servicing or installing the unit.

1. Remove the top cover of the power interface to access the mounting holes and terminal blocks.

2. Mount the power interface as indicated in options 1, 2, or 3 to the right.

Note: Consider the following when choosing a mounting location:

- A minimum of 3 in (76 mm) is required between any two power interfaces
- Mount the power interface in a position where it can be easily located and accessed if service or troubleshooting is necessary
- Any other mounting configurations will require additional mechanical support. Improper installation may result in hazards to personnel or property.

Note: For 277 V∼ applications, a suitable barrier may be required between the non-Class 2 and Class 2 wiring, per local and national electrical wiring codes. For your convenience, the power interface includes an optional barrier

Option 1

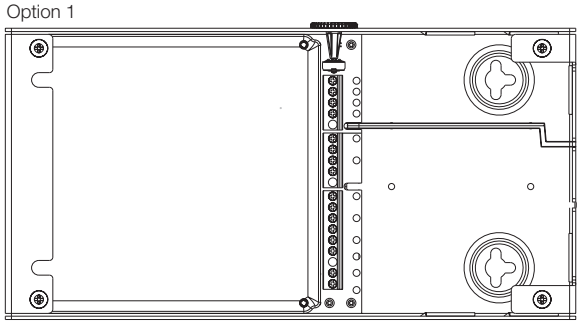

Option 2

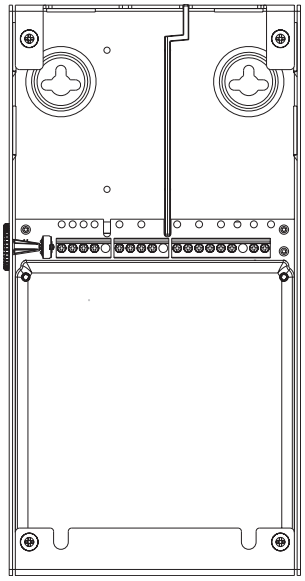

Option 3

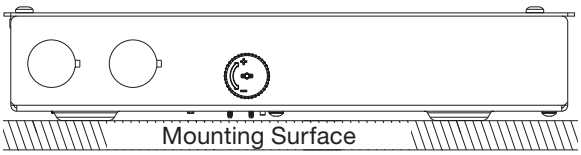

Power Interface Installation *(continued)*

3. Open the necessary knockouts to pass wires into the wiring compartment.

4. Using the tools in Lutron Designer, determine the length and gauge of wire needed and wire from the power interface to the wireless controller.

a. If wireless controllers are programmed in separate zones and LED+ & LED- wires are in a T-tap configuration **(Option 2)**, it may result in subtle interaction between controllers. Wiring in a homerun configuration **(Option 1)** will have limited interaction between controllers programmed in separate zones.

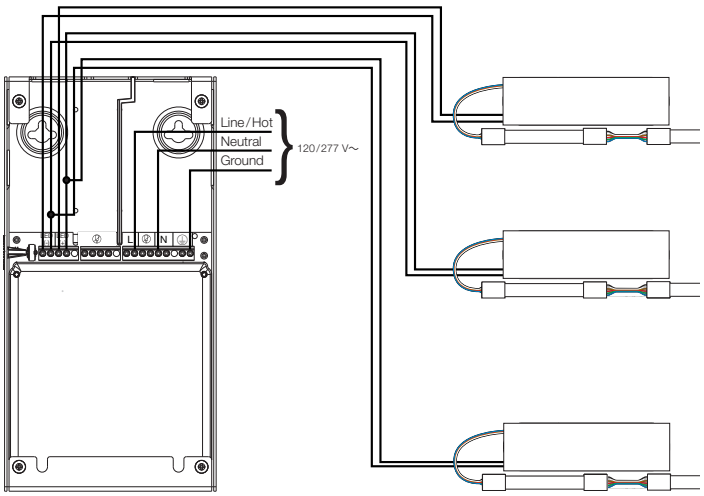

Option 1: Individual Wire Runs

b. If wireless controllers are programmed in a single zone, LED+ and LED- wires can be wired either in a homerun or T-tap configuration **(Option 1 or Option 2)** without concern of interaction between controllers

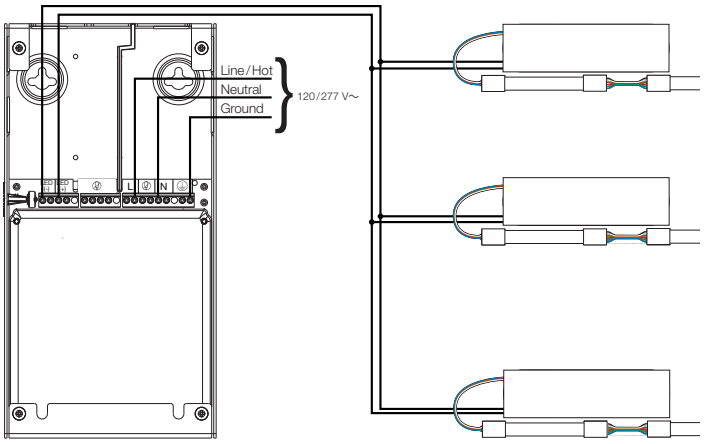

Option 2: T-tapped Wire Run

c. Connect the necessary wires as shown in the wiring diagram to the power interface. Power interface terminals accept 12 AWG to 20 AWG (4.0 mm^2 to 0.50 mm^2). Wireless controller terminals accept 14 AWG to 22 AWG (2.5 mm^2 to 0.34 mm^2).

Note: When wiring 3 controllers to the power interface, 2 of the 3 wireless controller LED+ and LED- wire need to be spliced together in the power interface wiring compartment with a wire nut and single wire run to the terminal block. LED+ and LED- terminals on the power interface accept one wire per terminal only.

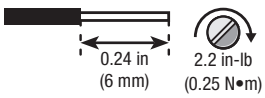

5. Complete wireless controller installation and re-apply power.

Wireless Controller Installation

1. Mount the wireless controller using the provided screws.

Tape Style	Tape Identification	1	2	3	4	5	6
RGB+TW	A● B● C○ D○	Blue	Green	Red	Brown	White	Black

2. Connect wires from the LED tape to the output terminal of the controller ensuring to use the correct output wiring for the LED tape being used.

3. Connect wires to the input terminal of the controller.

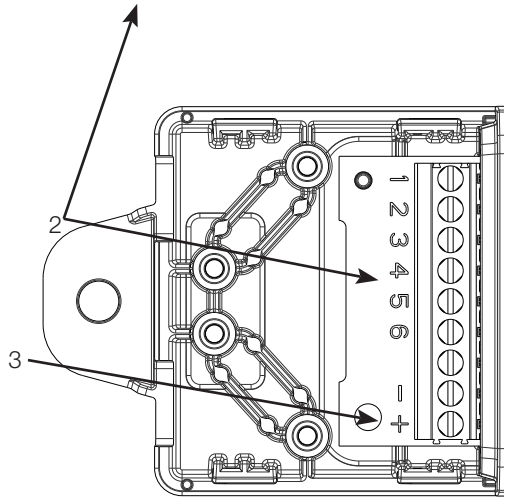

4. Install strain relief and tighten screws.

   Note: The strain relief is reversible. Orientation ❶ provides the best strain relief for most wire diameters. For some large wire applications, orientation ❷ may be needed.

   Note: : All outside wire diameters must be between 0.1 in to 0.25 in (2.5 mm to 6.4 mm).

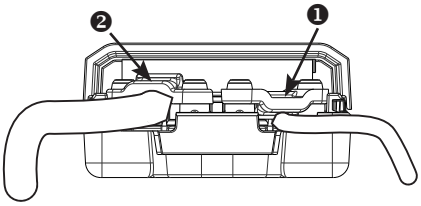

Correct

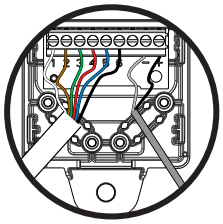

Incorrect

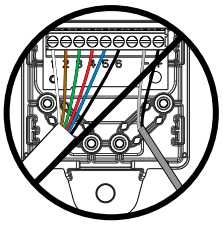

5. Install terminal cover.

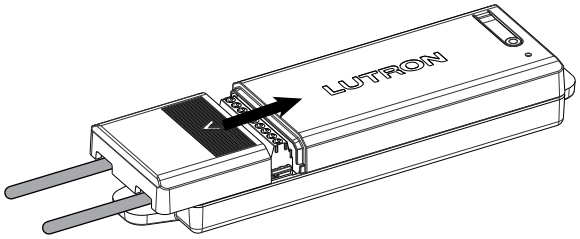

Troubleshooting

Indicator LED Flash Pattern	Reason	Remedy
LED on wireless controller is off	No power to wireless controller	Confirm that the circuit breaker is on to the power interface and that the line voltage wiring is connected to the proper terminals.
Red LED on the wireless controller flashes once then a 2 second pause	Output short circuited	Disconnect the loads from the wireless controller and check for shorts. Power cycle the wireless controller to reset.
Red LED on wireless controller flashes twice, then 2 second pause	Output overloaded	Confirm that only 32.8 ft (10 m) of LED tape is connected to the wireless controller output. Power cycle the wireless controller to reset.
Red LED on wireless controller flashes three times, then 2 second pause	Input voltage too low	Confirm that the wireless controller is being powered by 24 V ⎓ ± 10 %.
Red LED on wireless controller flashes four times, then 2 second pause	Input voltage too high	
Green LED on wireless controller is on continuously	Device is not commissioned	Activate the device in a system.

General Information / Contact Us

Limited Warranty:

For limited warranty information, please visit http://www.lutron.com/TechnicalDocumentLibrary/043492.pdf

FCC/IC Information:

This device complies with part 15 of the FCC Rules and Industry Canada license-exempt RSS standard(s). Operation is subject to the following two conditions: (1) This device may not cause interference, and (2) this device must accept any interference, including interference that may cause undesired operation. Modifications not expressly approved by Lutron Electronics Co., Inc. could void the user's authority to operate this equipment.

NOTE: This equipment has been tested and found to comply with the limits for a Class B digital device, pursuant to part 15 of the FCC Rules. These limits are designed to provide reasonable protection against harmful interference in a residential installation. This equipment generates, uses and can radiate radio frequency energy and, if not installed and used in accordance with the instructions, may cause harmful interference to radio communications. However, there is no guarantee that interference will not occur in a particular installation. If this equipment does cause harmful interference to radio or television reception, which can be determined by turning the equipment off and on, the user is encouraged to try to correct the interference by one or more of the following measures:

- Reorient or relocate the receiving antenna
- Increase the separation between the equipment and receiver
- Connect the equipment into an outlet on a circuit different from that to which the receiver is connected
- Consult the dealer or an experienced radio/TV technician for help

This Class B digital apparatus complies with Canadian ICES-005.

This equipment complies with FCC/ISED radiation exposure limits set for an uncontrolled environment. The user should avoid prolonged exposure within 7.9 in (20 cm) of the antenna, which may exceed the FCC/ISED radio frequency exposure limits.

Lutron, Lumaris are trademarks or registered trademarks of Lutron Electronics Co., Inc. in the US and/or other countries.

All other product names, logos, and brands are property of their respective owners.

Lutron Contact Numbers

WORLD HEADQUARTERS:
USA
Lutron Electronics Co., Inc.
7200 Suter Road
Coopersburg, PA 18036-1299
TEL: +1.610.282.3800
FAX: +1.610.282.1243

support@lutron.com

www.lutron.com/support

North & South America
Customer Assistance
USA, Canada, Caribbean:
1.844.LUTRON1 (1.844.588.7661)
Mexico:
+1.888.235.2910
Central/South America:
+1.610.282.6701

UK AND EUROPE:
Lutron EA Limited
3rd Floor, 51 Lime Street
London EC3M 7DQ
United Kingdom
TEL: +44.(0)20.7702.0657
FAX: +44.(0)20.7480.6899
FREEPHONE (UK): 0800.282.107
Technical Support: +44.(0)20.7680.4481

lutronlondon@lutron.com

ASIA:
Lutron GL Ltd.
390 Havelock Road
#07-04 King's Centre
Singapore 169662
TEL: +65.6220.4666
FAX: +65.6220.4333
Technical Support: 800.120.4491

lutronsea@lutron.com

Asia Technical Hotlines
Northern China: 10.800.712.1536
Southern China: 10.800.120.1536
Hong Kong: 800.901.849
Indonesia: 001.803.011.3994
Japan: +81.3.5575.8411
Macau: 0800.401
Taiwan: 00.801.137.737
Thailand: 001.800.120.665853
Other Countries: +65.6220.4666

Lutron Electronics Co., Inc.
7200 Suter Road
Coopersburg, PA 18036-1299 U.S.A.
P/N 043611 Rev. A 08/2024