Safety. Science. Transformation.™

ANTENNA GAIN AND PATTERN MEASUREMENT REPORT

For Gain value reference

FOR

SIGNO READER

PART/MODEL NUMBER: 20KV2

DATE ISSUED: May 30, 2025

REPORT NUMBER: 15783327-O2V1

Prepared for
HID Global Corporation
611 Center Ridge Drive
Austin
Texas, 78753, U.S.A.

Prepared by
UL VERIFICATION SERVICES INC.
47173 BENICIA STREET
FREMONT, CA 94538, U.S.A.
TEL: (510) 319-4000
FAX: (510) 661-0888

Revision History

Rev.	Issue Date	Revisions	Revised By
V1	05/30/2025	Initial Issue	

UL VERIFICATION SERVICES INC. 47173 BENICIA STREET, FREMONT, CA 94538, USA
TEL: (510) 319-4000
This report shall not be reproduced except in full, without the written approval of UL Verification Services Inc.

TABLE OF CONTENTS

1 ATTESTATION OF TEST RESULTS 4

2 TEST METHODOLOGY 5

3 TEST FACILITY 6

3.1 AMBIENT CONDITION 6

4 TEST AND MEASUREMENT EQUIPMENT 6

5 DEVICE UNDER TEST INFORMATION 7

6 RESULT SUMMARY 7

7 2D PLOTS 8

7.1 2402 MHz 8

7.2 2442 MHz 8

7.3 2482 MHz 9

8 3D PLOTS 10

8.1 2402 MHz 10

8.2 2442 MHz 13

8.3 2482 MHz 16

9 TEST SETUP 19

UL VERIFICATION SERVICES INC. 47173 BENICIA STREET, FREMONT, CA 94538, USA
TEL: (510) 319-4000

This report shall not be reproduced except in full, without the written approval of UL Verification Services Inc.

1 ATTESTATION OF TEST RESULTS

Company Name and Address	HID Global Corporation
	611 Center Ridge Drive
	Austin, Texas, 78753
	U.S.A.
EUT Description	Signo Reader
Part/Model	20KV2
Date Tested	04/28/2025

APPLICABLE STANDARDS

STANDARD	TEST RESULTS
Non-standard Test Method*	Information Only

UL Verification Services Inc. tested the above equipment in accordance with the requirements set forth in the above standards. The test results show that the equipment tested is capable of demonstrating compliance with the requirements as documented in this report.

The results documented in this report apply only to the tested sample, under the conditions and modes of operation as described herein. It is the manufacturer's responsibility to assure that additional production units of this model are manufactured with identical electrical and mechanical components. All samples tested were in good operating condition throughout the entire test program. Measurement Uncertainties are published for informational purposes only and were not taken into account unless noted otherwise.

This document may not be altered or revised in any way unless done so by UL Verification Services Inc. and all revisions are duly noted in the revisions section. Any alteration of this document not carried out by UL Verification Services Inc. will constitute fraud and shall nullify the document.

This report contains data provided by the customer which can impact the validity of results. UL Verification Services Inc. is only responsible for the validity of results after the integration of the data provided by the customer.

Approved & Released For
UL Verification Services Inc. By:

E.B.

Ekta Budhbhatti
OPERATIONS LEADER
UL Verification Services Inc.

Tested and Prepared By:

Casey Dial

Casey Dial
TEST ENGINEER
UL Verification Services Inc.

This report shall not be reproduced except in full, without the written approval of UL Verification Services Inc.

2 TEST METHODOLOGY

The 2D Passive Antenna Pattern tests documented in this report were performed using a fixed elevation and a resolution (increment) of 2° for azimuth.

The 3D Passive Antenna Pattern tests documented in this report were performed using a resolution (increment) of 15° for both elevation and azimuth.

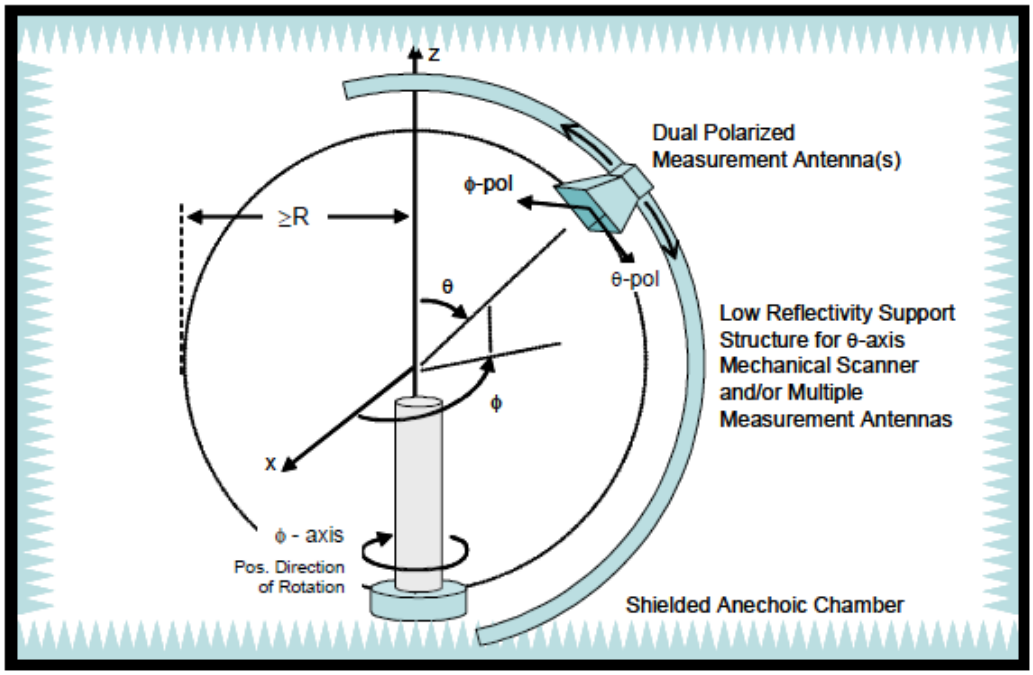

OTA TEST SYSTEM DIAGRAM

This report shall not be reproduced except in full, without the written approval of UL Verification Services Inc.

3 TEST FACILITY

The test sites and measurement facilities used to collect data are located at 47173 Benicia Street, Fremont, California, USA. The test was performed in OTA A.

Test Site used for testing	
OTA Lab A (Theta Arm Chamber)	☒
OTA Lab B (MAPS Chamber)	☐

- Test operator and Report writer: Casey Dial
- Report reviewed by: Ekta Budhbhatti

3.1 AMBIENT CONDITION

Temperature: ± 25 Dec C

4 TEST AND MEASUREMENT EQUIPMENT

The following test and measurement equipment was utilized for the tests documented in this report:

TEST EQUIPMENT LIST					
Description	**Manufacturer**	**Model**	**Asset**	**Cal Date**	**Cal Due**
Anechoic Chamber	ETS-Lindgren	AMS-8815	1000031	04/28/2025	N/A
PNA-L Network Analyzer	Agilent	N5230C	81979	01/29/2025	01/31/2026
Calibration Antenna	ETS-Lindgren	3117	206807	01/22/2025	01/31/2026

This report shall not be reproduced except in full, without the written approval of UL Verification Services Inc.

5 DEVICE UNDER TEST INFORMATION

Antenna	
Manufacturer	HID Global Corporation
Part/Model Number	20KV2
Frequency range (MHz)	2402,2442,2482
Device/Antenna type	PCB, Inverted F

6 RESULT SUMMARY

Measurement	Frequency (MHz)		
	2402	2442	2482
3D Peak Gain (dBi)	-0.94	0.06	1.05
2D/Peak Gain (dBi)	-0.39	0.09	1.05

UL VERIFICATION SERVICES INC. 47173 BENICIA STREET, FREMONT, CA 94538, USA
TEL: (510) 319-4000
This report shall not be reproduced except in full, without the written approval of UL Verification Services Inc.

7 2D PLOTS

7.1 2402 MHz

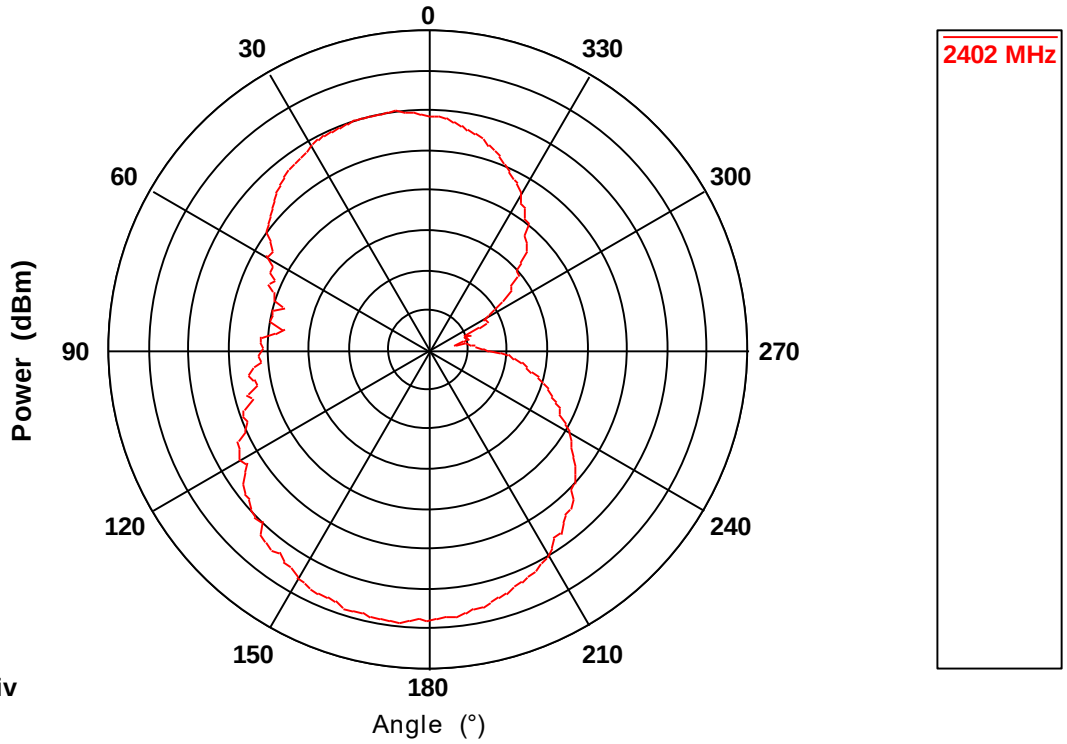

7.2 2442 MHz

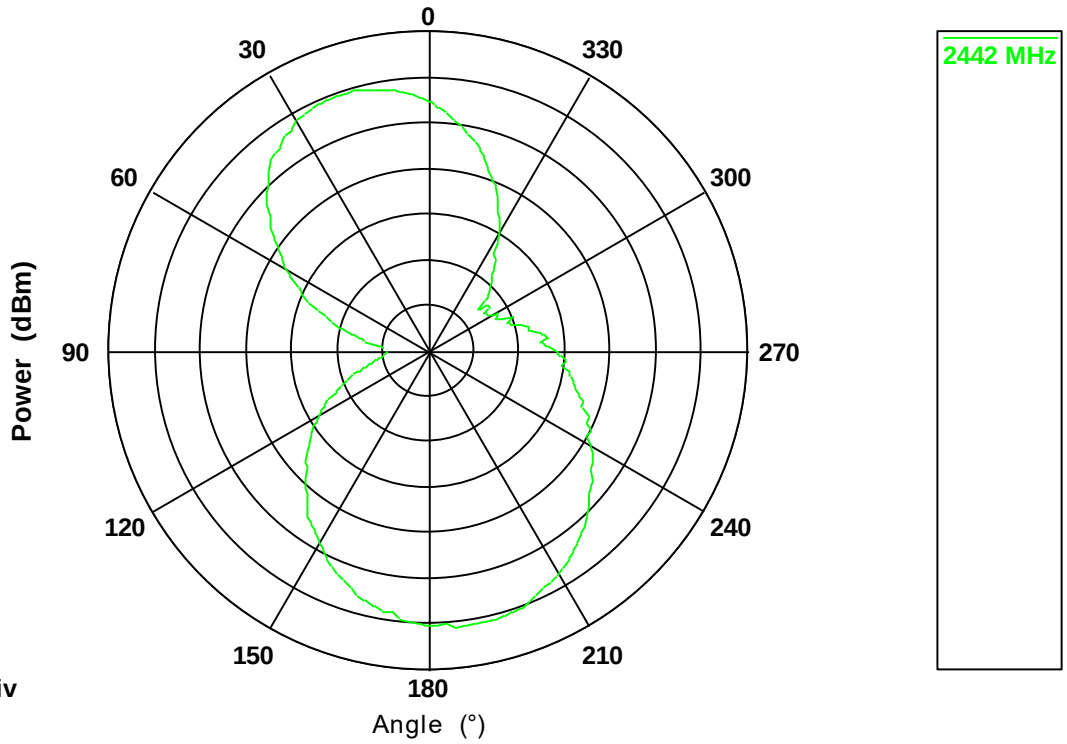

UL VERIFICATION SERVICES INC. 47173 BENICIA STREET, FREMONT, CA 94538, USA
TEL: (510) 319-4000
This report shall not be reproduced except in full, without the written approval of UL Verification Services Inc.

7.3 2482 MHz

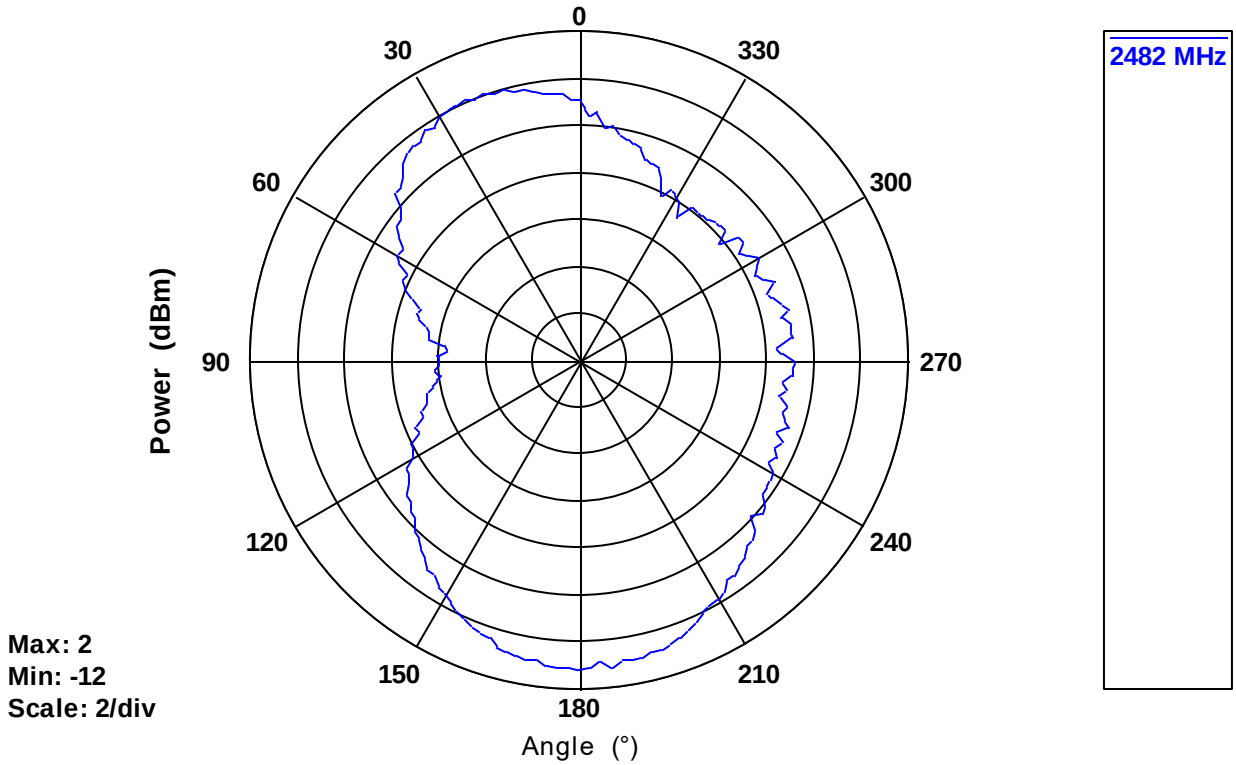

UL VERIFICATION SERVICES INC. 47173 BENICIA STREET, FREMONT, CA 94538, USA
TEL: (510) 319-4000
This report shall not be reproduced except in full, without the written approval of UL Verification Services Inc.

8 3D PLOTS

8.1 2402 MHz

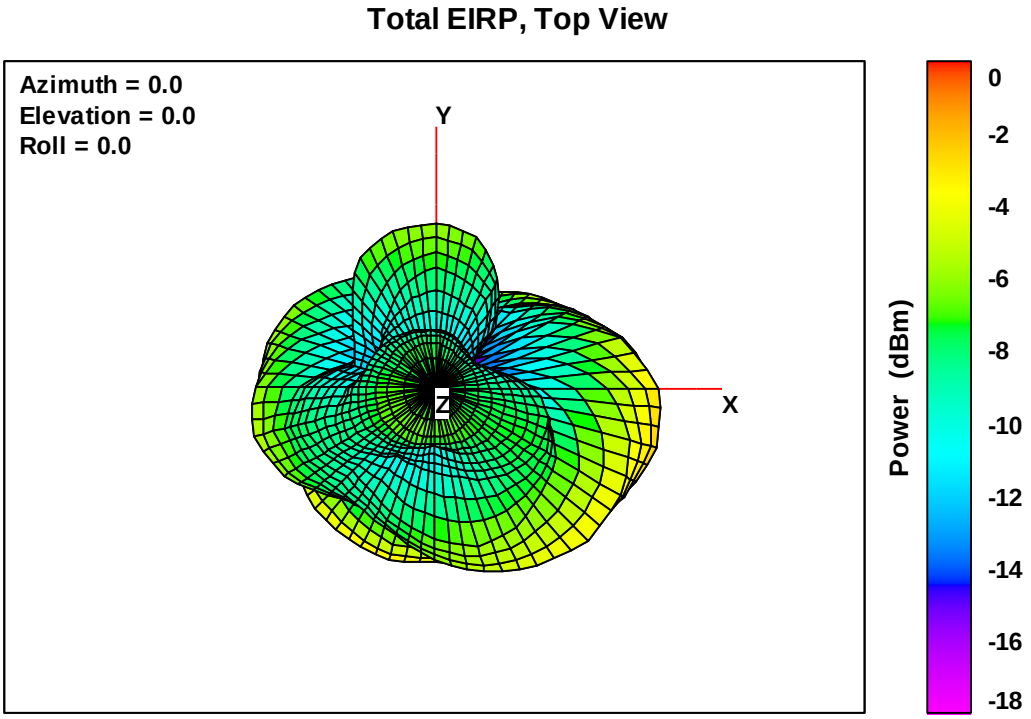

20K V2 Free-Space Total EIRP, Top View, 2402 MHz

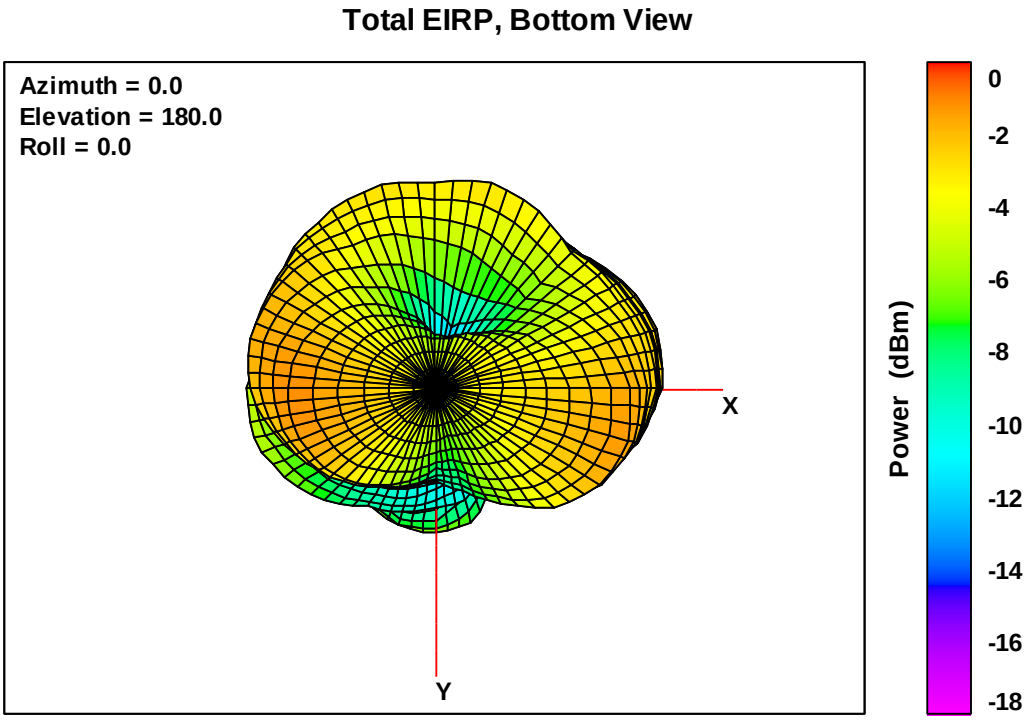

20K V2 Free-Space Total EIRP, Bottom View, 2402 MHz

UL VERIFICATION SERVICES INC. 47173 BENICIA STREET, FREMONT, CA 94538, USA
TEL: (510) 319-4000
This report shall not be reproduced except in full, without the written approval of UL Verification Services Inc.

Total EIRP, Left Side View

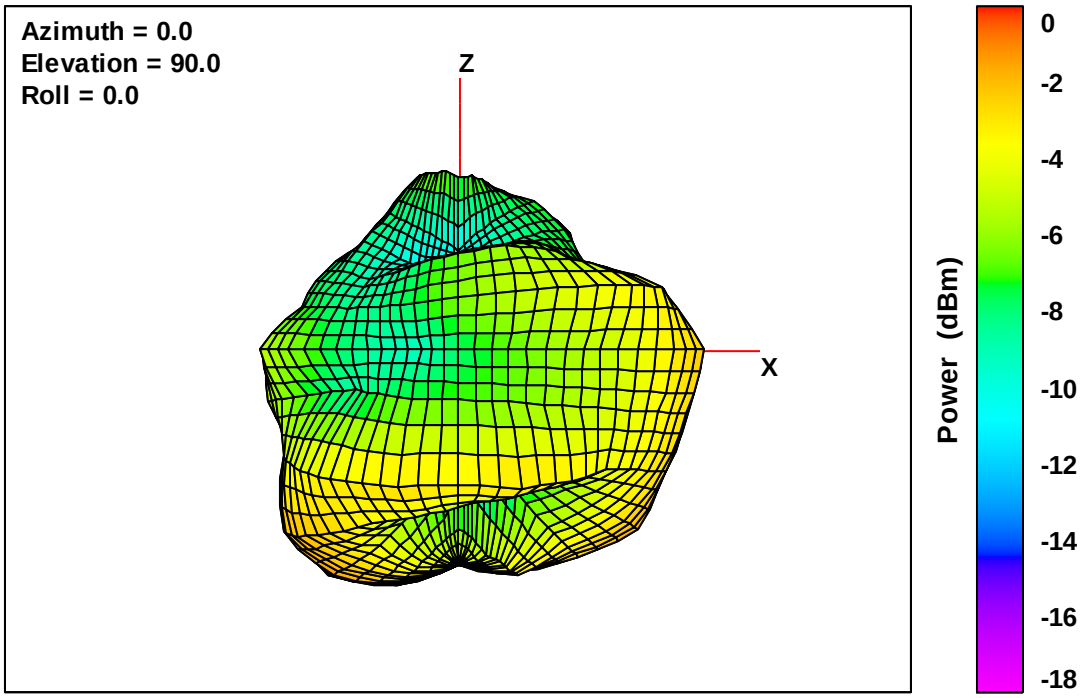

20K V2 Free-Space Total EIRP, Left Side View, 2402 MHz

Total EIRP, Front Face View

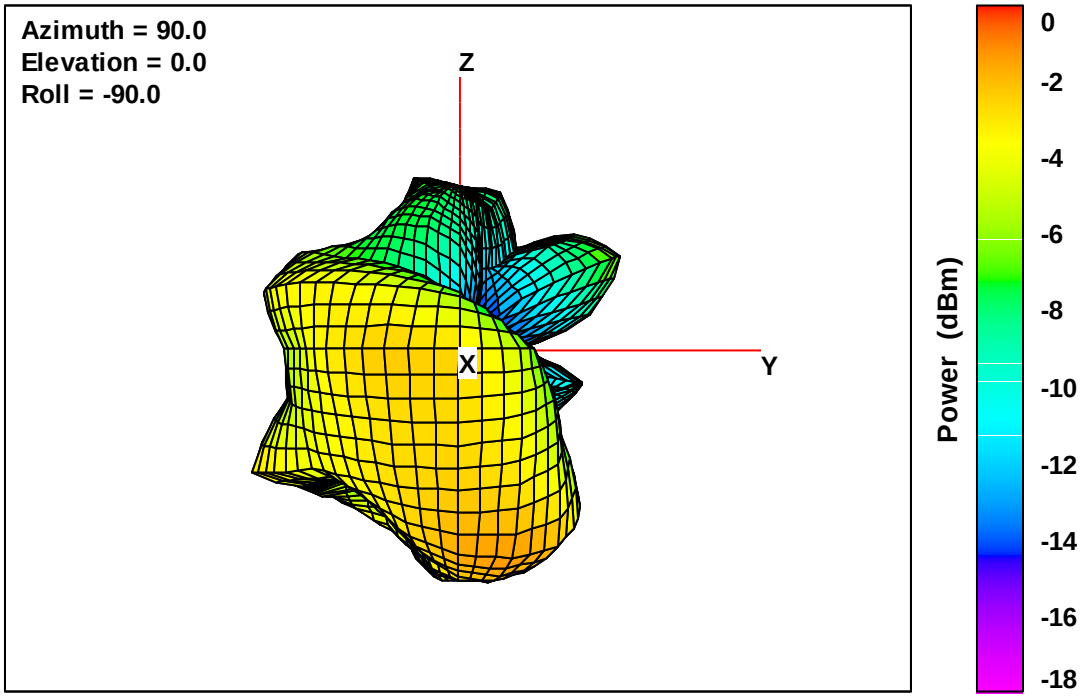

20K V2 Free-Space Total EIRP, Front Face View, 2402 MHz

UL VERIFICATION SERVICES INC. 47173 BENICIA STREET, FREMONT, CA 94538, USA
TEL: (510) 319-4000
This report shall not be reproduced except in full, without the written approval of UL Verification Services Inc.

Total EIRP, Right Side View

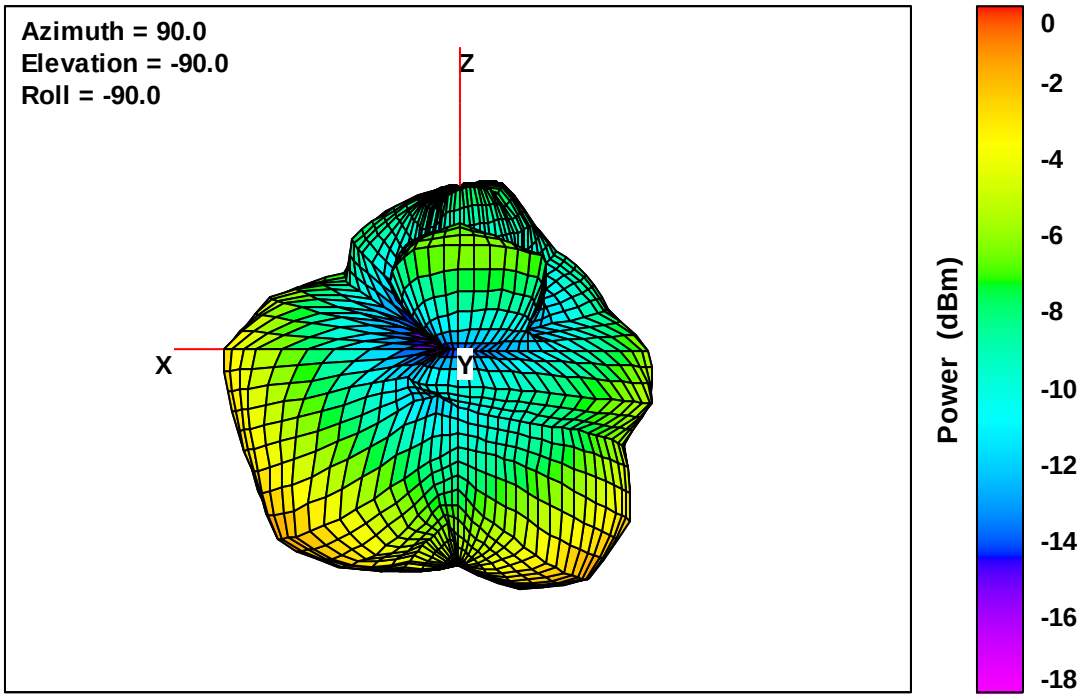

20K V2 Free-Space Total EIRP, Right Side View, 2402 MHz

Total EIRP, Back Face View

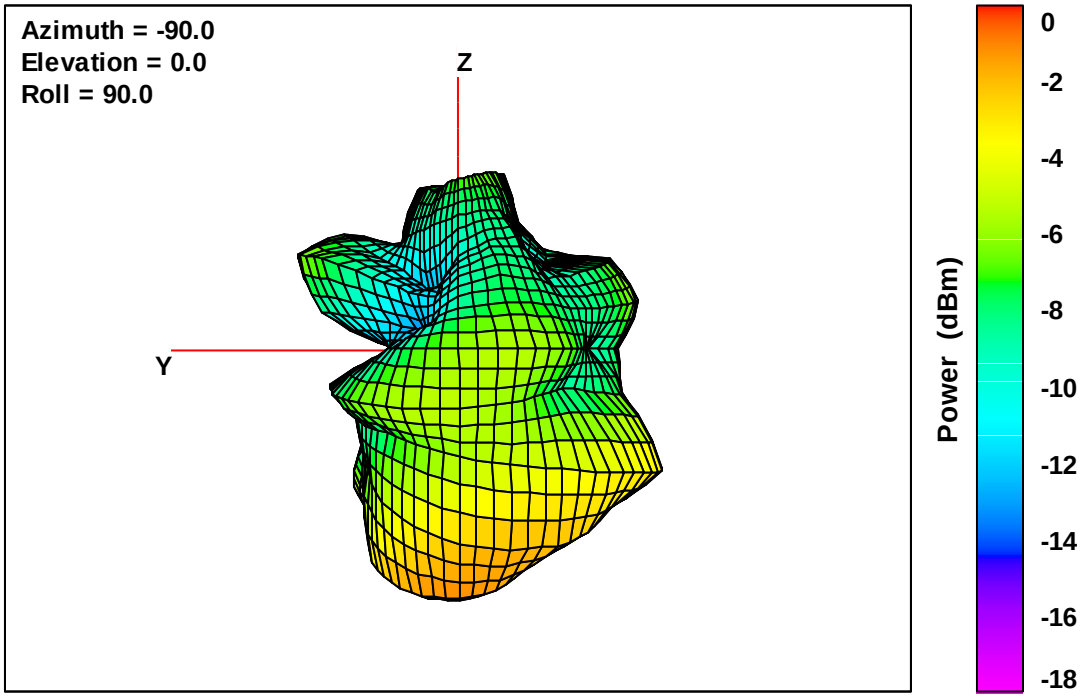

20K V2 Free-Space Total EIRP, Back Face View, 2402 MHz

UL VERIFICATION SERVICES INC. 47173 BENICIA STREET, FREMONT, CA 94538, USA
TEL: (510) 319-4000
This report shall not be reproduced except in full, without the written approval of UL Verification Services Inc.

8.2 2442 MHz

Total EIRP, Top View

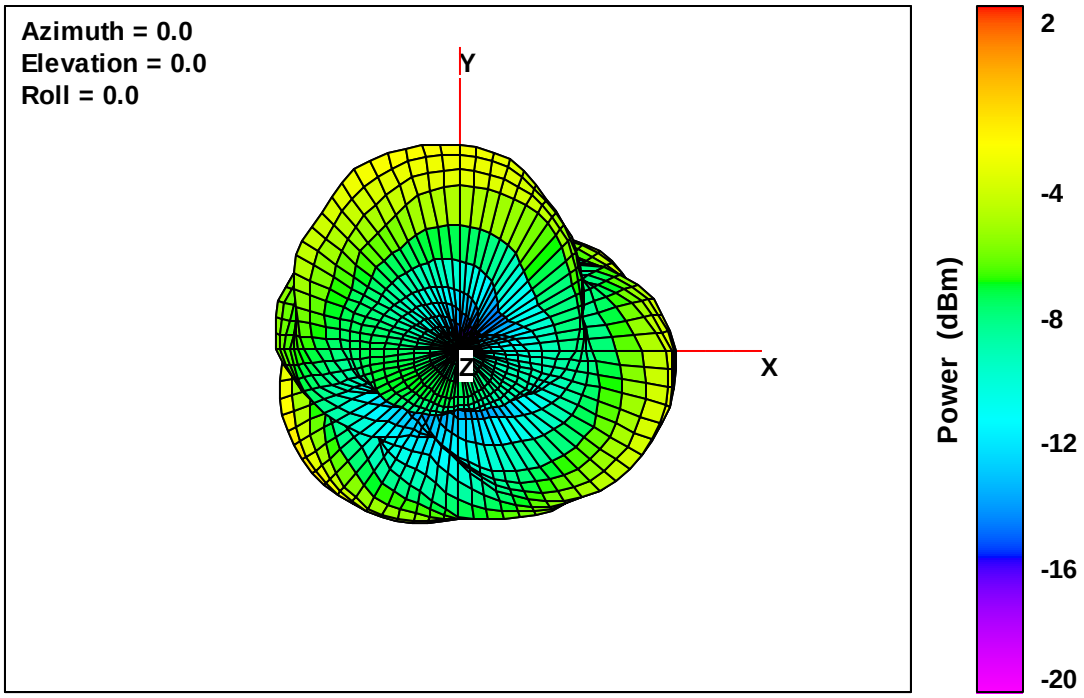

20K V2 Free-Space Total EIRP, Top View, 2442 MHz

Total EIRP, Bottom View

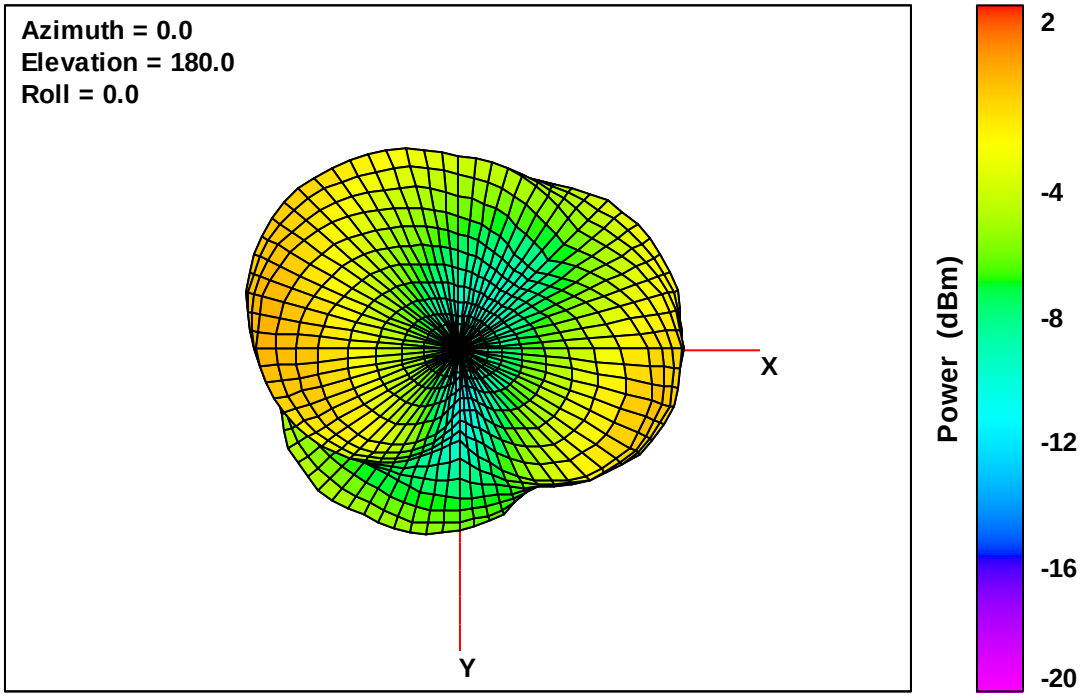

20K V2 Free-Space Total EIRP, Bottom View, 2442 MHz

This report shall not be reproduced except in full, without the written approval of UL Verification Services Inc.

Total EIRP, Left Side View

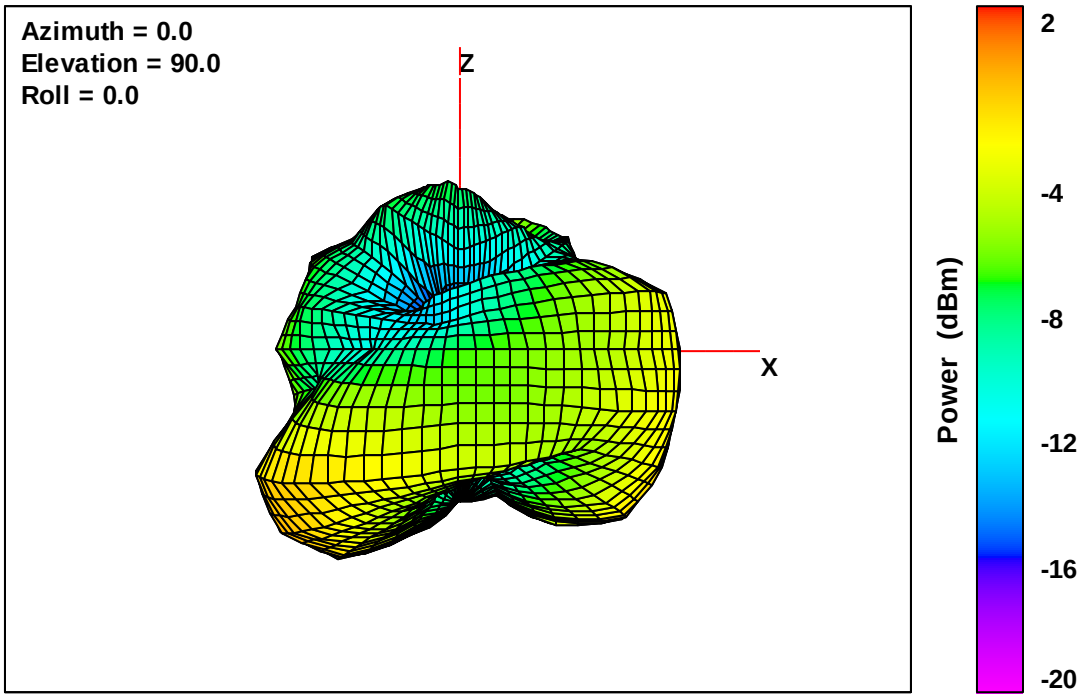

20K V2 Free-Space Total EIRP, Left Side View, 2442 MHz

Total EIRP, Front Face View

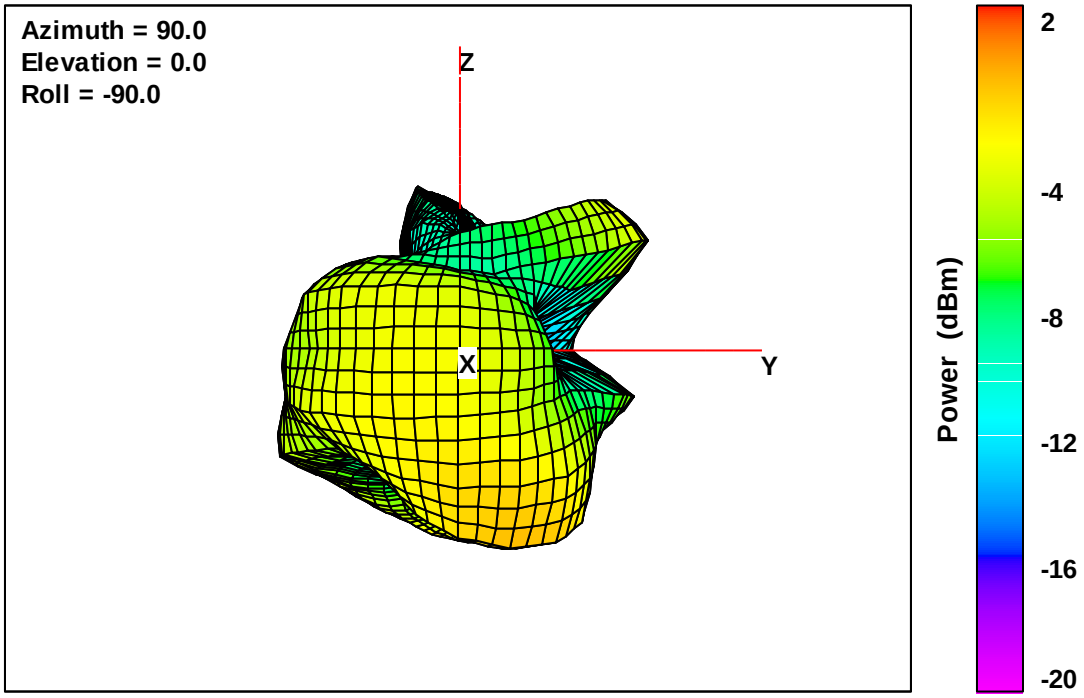

20K V2 Free-Space Total EIRP, Front Face View, 2442 MHz

UL VERIFICATION SERVICES INC. 47173 BENICIA STREET, FREMONT, CA 94538, USA
TEL: (510) 319-4000
This report shall not be reproduced except in full, without the written approval of UL Verification Services Inc.

Total EIRP, Right Side View

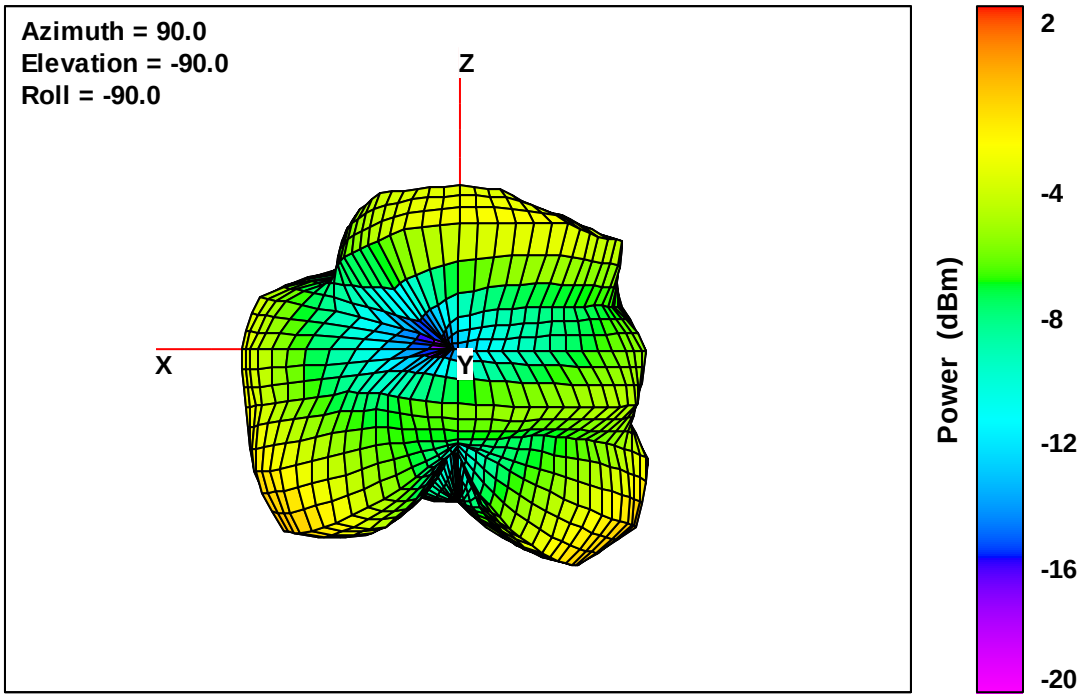

20K V2 Free-Space Total EIRP, Right Side View, 2442 MHz

Total EIRP, Back Face View

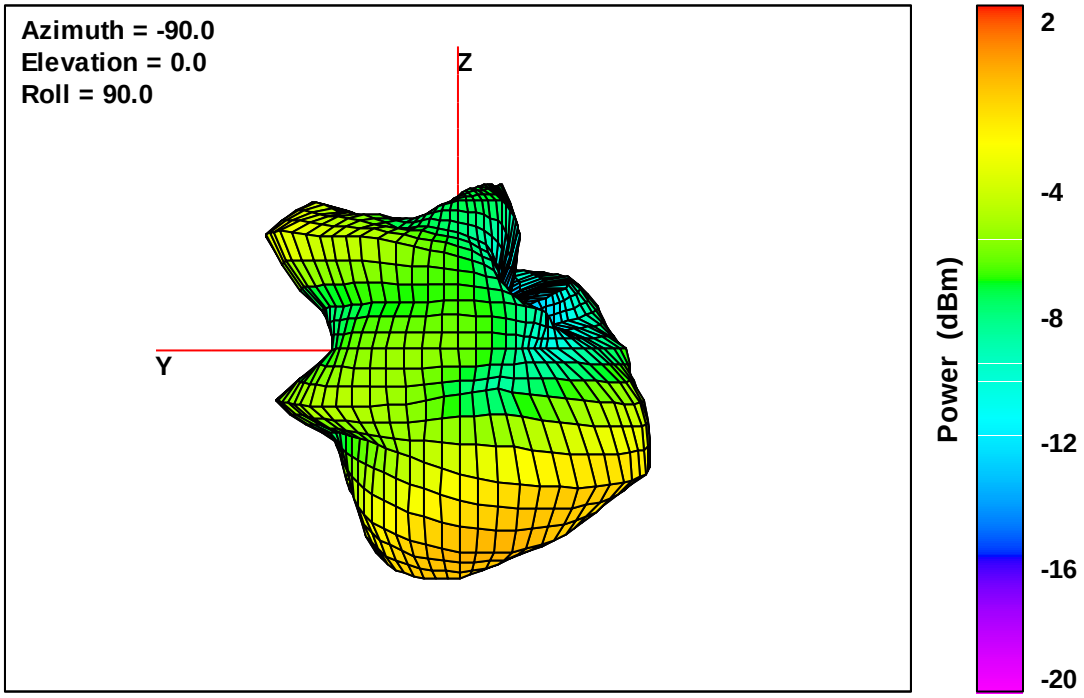

20K V2 Free-Space Total EIRP, Back Face View, 2442 MHz

UL VERIFICATION SERVICES INC. 47173 BENICIA STREET, FREMONT, CA 94538, USA
TEL: (510) 319-4000
This report shall not be reproduced except in full, without the written approval of UL Verification Services Inc.

8.3 2482 MHz

Total EIRP, Top View

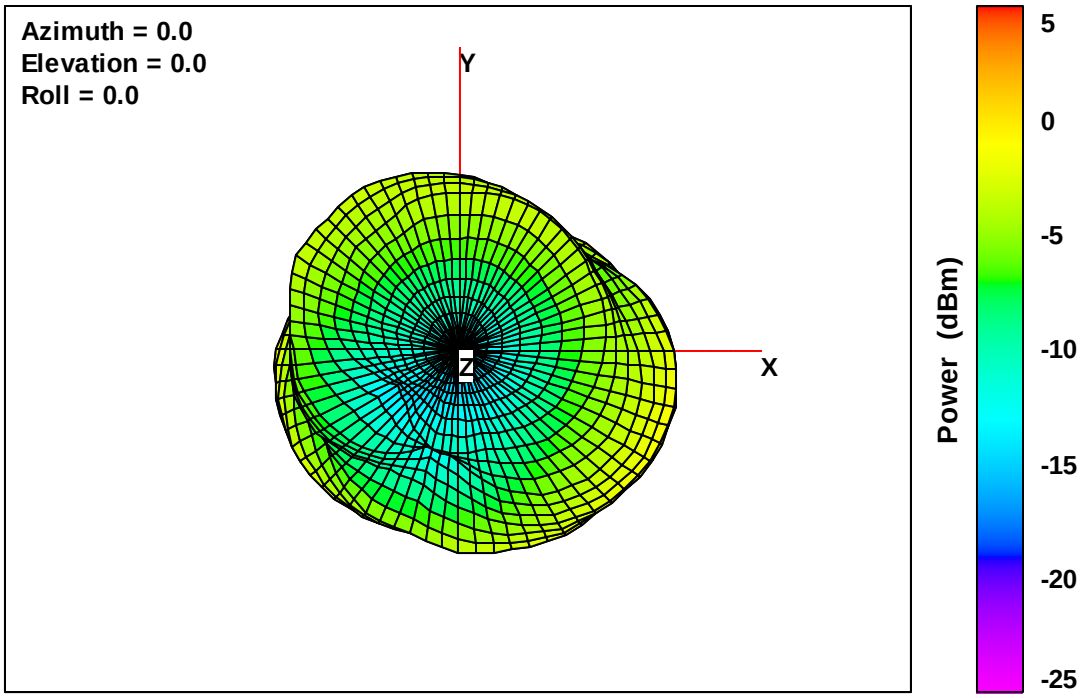

20K V2 Free-Space Total EIRP, Top View, 2482 MHz

Total EIRP, Bottom View

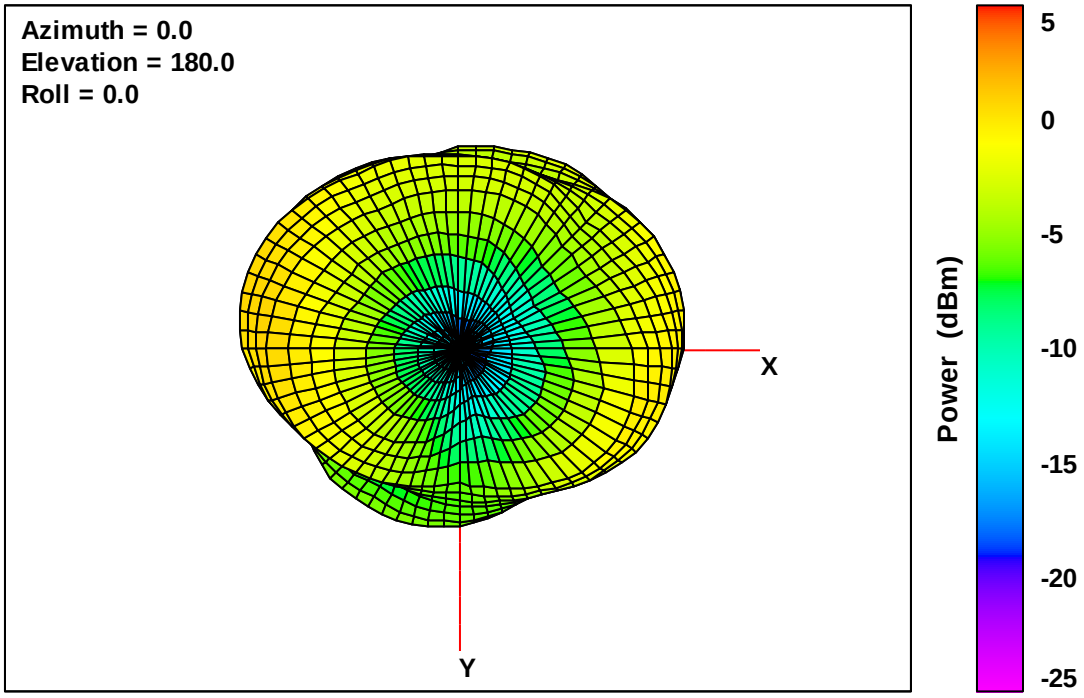

20K V2 Free-Space Total EIRP, Bottom View, 2482 MHz

UL VERIFICATION SERVICES INC. 47173 BENICIA STREET, FREMONT, CA 94538, USA
TEL: (510) 319-4000
This report shall not be reproduced except in full, without the written approval of UL Verification Services Inc.

Total EIRP, Left Side View

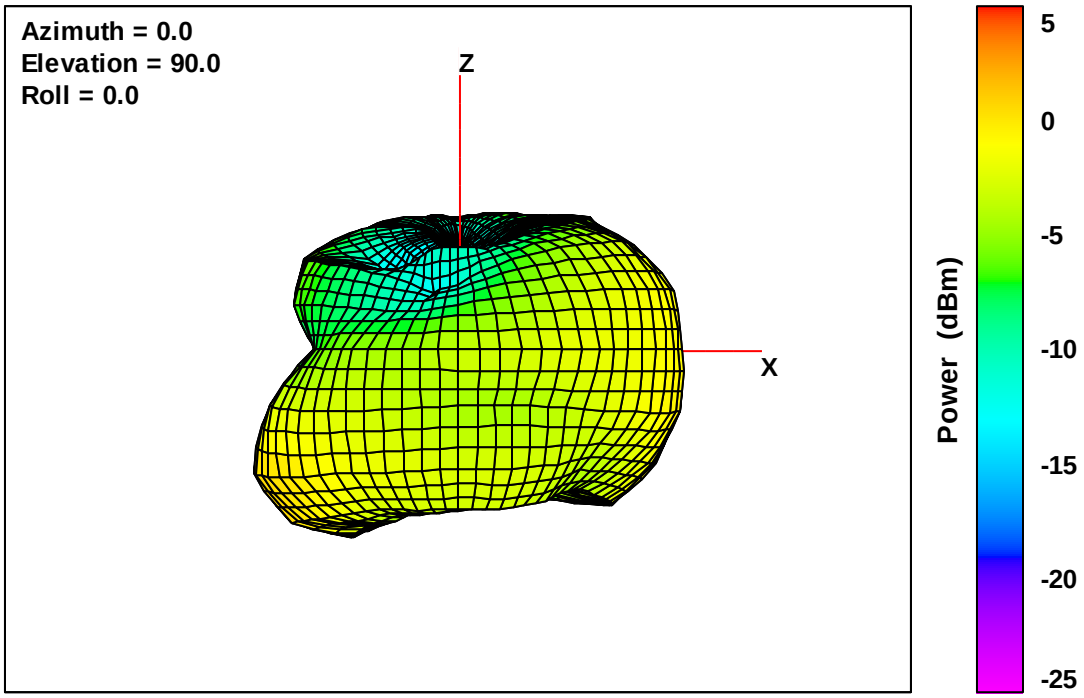

20K V2 Free-Space Total EIRP, Left Side View, 2482 MHz

Total EIRP, Front Face View

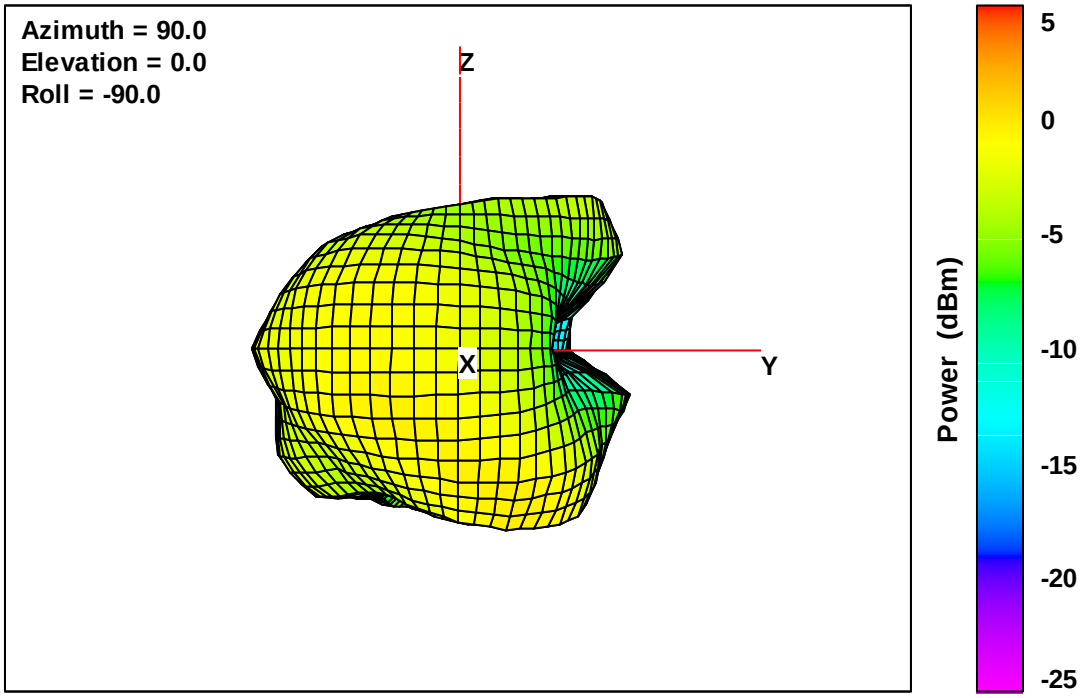

20K V2 Free-Space Total EIRP, Front Face View, 2482 MHz

UL VERIFICATION SERVICES INC. 47173 BENICIA STREET, FREMONT, CA 94538, USA
TEL: (510) 319-4000
This report shall not be reproduced except in full, without the written approval of UL Verification Services Inc.

Total EIRP, Right Side View

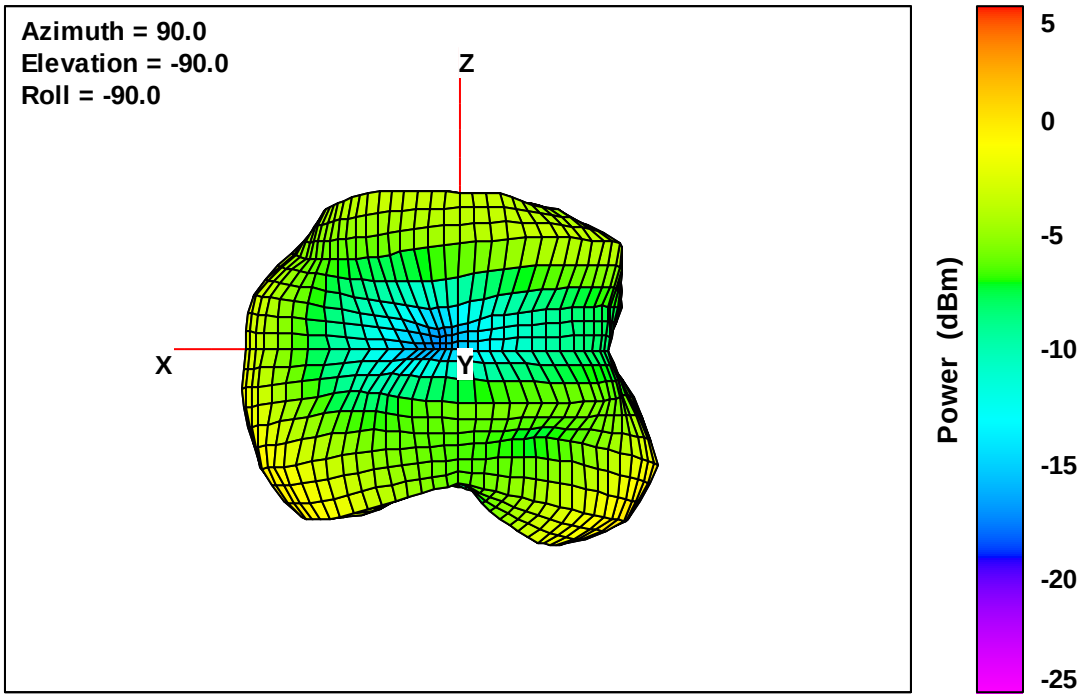

20K V2 Free-Space Total EIRP, Right Side View, 2482 MHz

Total EIRP, Back Face View

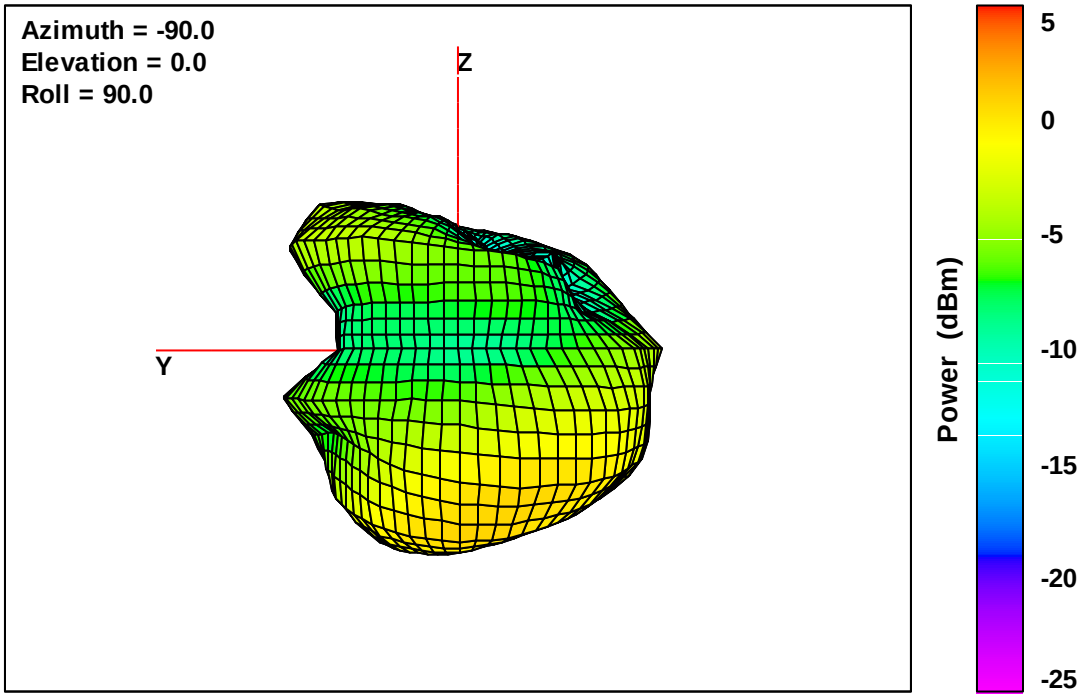

20K V2 Free-Space Total EIRP, Back Face View, 2482 MHz

UL VERIFICATION SERVICES INC. 47173 BENICIA STREET, FREMONT, CA 94538, USA
TEL: (510) 319-4000
This report shall not be reproduced except in full, without the written approval of UL Verification Services Inc.

9 TEST SETUP

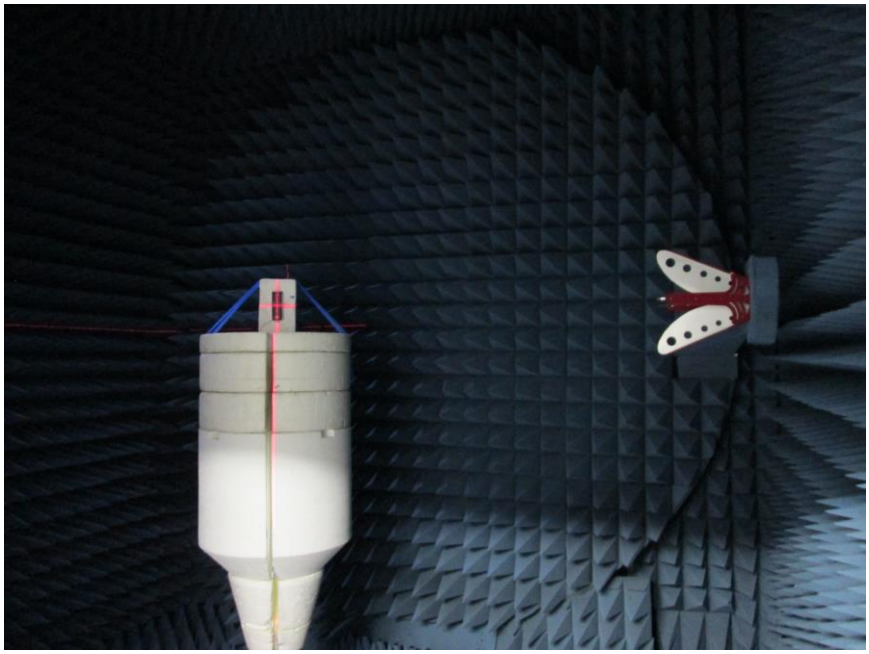

SETUP PHOTO

EUT PHOTO

END OF REPORT

This report shall not be reproduced except in full, without the written approval of UL Verification Services Inc.