REV	DESCRIPTION	ECO	BY	CHK	DATE	APP	DATE
C	REVISED PER ECO		EAB				
D	CHG'D SW1 & ADD R61,62,CR13,14	12476	KJS	KJS	5/00	TW	7/00

NOTES: UNLESS OTHERWISE SPECIFIED

1. RESISTORS ARE IN OHMS, .1W, 5%.
2. CAPACITORS ARE 50V.

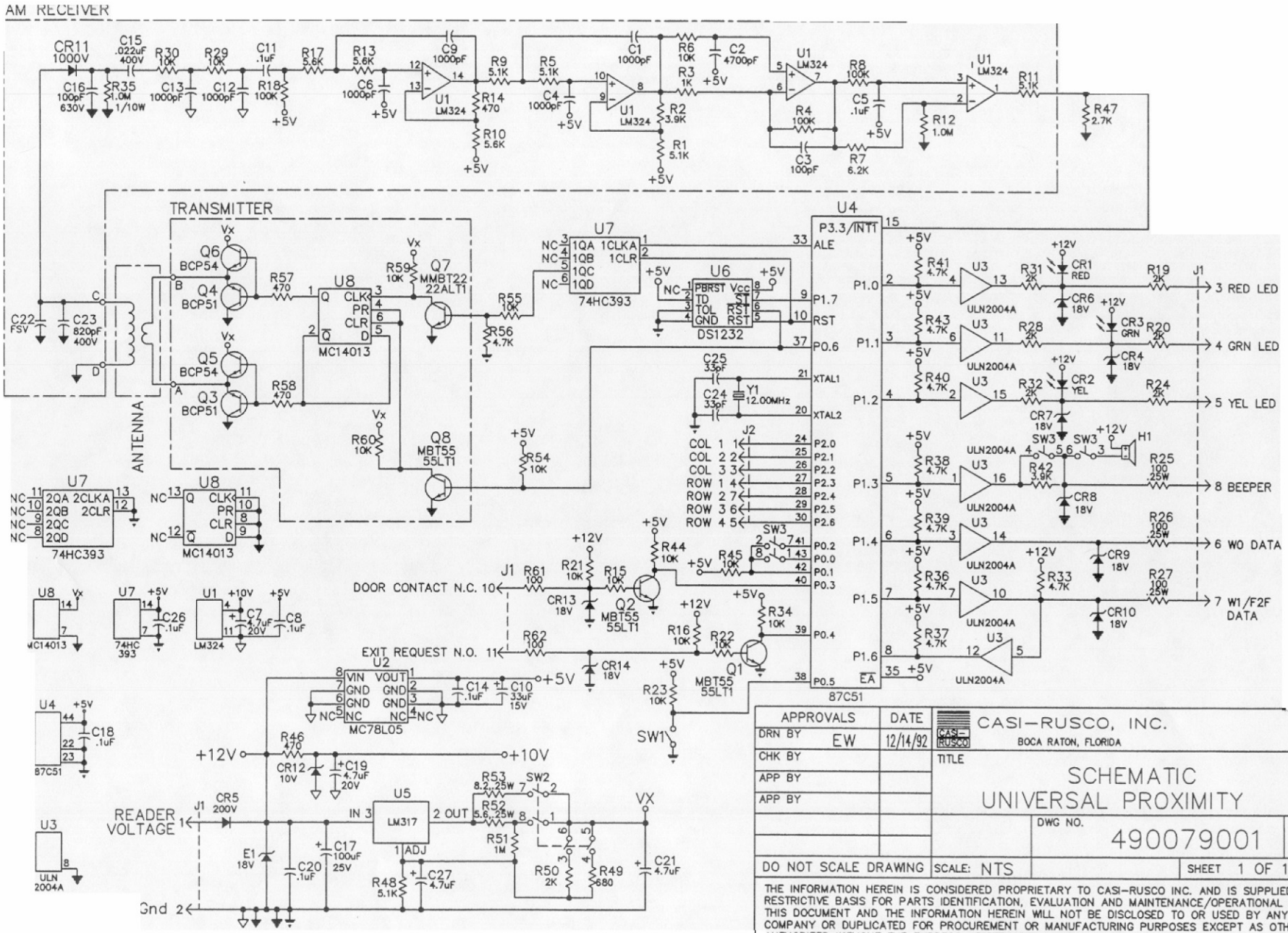

APPROVALS	DATE
DRN BY EW	12/14/92
CHK BY	
APP BY	
APP BY	

CASI-RUSCO, INC.
BOCA RATON, FLORIDA

TITLE
SCHEMATIC
UNIVERSAL PROXIMITY

DWG NO. 490079001 REV D DWG SIZE A

DO NOT SCALE DRAWING SCALE: NTS SHEET 1 OF 1

THE INFORMATION HEREIN IS CONSIDERED PROPRIETARY TO CASI-RUSCO INC. AND IS SUPPLIED ON A RESTRICTIVE BASIS FOR PARTS IDENTIFICATION, EVALUATION AND MAINTENANCE/OPERATIONAL USE ONLY. THIS DOCUMENT AND THE INFORMATION HEREIN WILL NOT BE DISCLOSED TO OR USED BY ANY PERSON/COMPANY OR DUPLICATED FOR PROCUREMENT OR MANUFACTURING PURPOSES EXCEPT AS OTHERWISE AUTHORIZED WITHOUT THE EXPRESS WRITTEN PERMISSION OF CASI-RUSCO INC..