InstaShow™

User Manual

VS20

V 1.00

Copyright

Copyright © 2022 by BenQ Corporation. All rights reserved. No part of this publication may be reproduced, transmitted, transcribed, stored in a retrieval system or translated into any language or computer language, in any form or by any means, electronic, mechanical, magnetic, optical, chemical, manual or otherwise, without the prior written permission of BenQ Corporation.

Disclaimer

BenQ Corporation makes no representations or warranties, either expressed or implied, with respect to the contents hereof and specifically disclaims any warranties, merchantability or fitness for any particular purpose. Further, BenQ Corporation reserves the right to revise this publication and to make changes from time to time in the contents hereof without obligation of BenQ Corporation to notify any person of such revision or changes.

This user manual aims to provide the most updated and accurate information to customers, and thus all contents may be modified from time to time without prior notice. Please visit www.BenQ.com for the latest version of this manual.

The illustrations and the images in this guide are for your reference.

Patents

Please go to http://patmarking.benq.com/ for the details on BenQ projector patent coverage.

Statement regarding hyperlinks and third-party websites

BenQ is not responsible for the content of the websites or of similar resources, which are maintained and controlled by third parties, that may be linked from this product. Providing links to those websites or to similar resources does not mean that BenQ makes any warranty or representation to their content by expression or by implication.

Any third party content or service preinstalled in this product is provided "as is". BenQ does not, by expression or by implication, make any warrant to the content or to the services provided by third parties. BenQ does not warrant or guarantee that the content or services provided by third parties are accurate, effective, most up-to-date, legal, or complete. Under no circumstances shall BenQ be liable for the content or services provided by third parties including their negligence. Services provided by third parties may be terminated temporarily or permanently. BenQ does not warrant or guarantee that the any content or services provided by third parties are in good condition at any time, and is not liable for the termination of the said content and services. In addition, BenQ is not involved in any transactions you conduct in the websites or similar resources maintained by third parties.

You should contact the content or service providers for any questions, concerns, or disputes.

BenQ ecoFACTS

BenQ has been dedicated to the design and development of greener product as part of its aspiration to realize the ideal of the “Bringing Enjoyment 'N Quality to Life” corporate vision with the ultimate goal to achieve a low-carbon society. Besides meeting international regulatory requirement and standards pertaining to environmental management, BenQ has spared no efforts in pushing our initiatives further to incorporate life cycle design in the aspects of material selection, manufacturing, packaging, transportation, using and disposal of the products. BenQ ecoFACTS label lists key eco-friendly design highlights of each product, hoping to ensure that consumers make informed green choices at purchase. Check out BenQ's CSR Website at http://csr.BenQ.com/ for more details on BenQ's environmental commitments and achievements.

Table of Contents

Copyright 2
Disclaimer 2
Patents 2
Statement regarding hyperlinks and third-party websites 2
BenQ ecoFACTS 3
- Package content 5
- Product specifications 6
- Overview 8
  - Button 8
  - Host 8
  - LED indicators of the Button and the Host 9

Installation 11
- Environment check 11
- Assembling the Host 12
- Setting up the Host 12
  - Attaching the Host to the ceiling 12
  - Attaching the Host to a ceiling mount 12
  - Placing the Host on a table 12
- Positioning the Host antennas 13
  - For ceiling installation 13
  - For ceiling mount installation 13
  - For table placement 13
- Connecting the HDMI cable and power 13
  - Assembling the adapter 13
  - Connecting the HDMI cable 14
  - Power supply via a power adapter 14
  - LAN connection 14
  - Switching to an HDMI and USB-A cable 14
- Setting up and powering a Button 14
- Pairing a Button and Host 15
  - When the Host is placed on a table 15
- Storing Buttons and USB cable in the cradle 16
- Resetting a Host 16
- Resetting a Button 16
- Enabling network standby mode 17

Starting and stopping presentations 18
- Getting ready 18
- Starting presentation 18
- Idle presentation 18
- Split screen presentations 18
  - Starting a split screen presentation 19
  - Switching from a split screen to a full screen presentation 19
- Touch back 19

Package content

InstaShow™ Buttons	InstaShow™ Host	Lid
4 Antennas	Cradle	Adapter & Plugs
Screws and Screw Anchors	Rubber Feet	Velcro Strap
Cable: HDMI A(M) to A(M)	HDMI and USB-A Button Cable	Quick Start Guide & Safety Statement

- Available accessories shown here may differ from the actual contents and the product supplied for your region.
- Use original accessories to ensure compatibility.
- Always keep the product and accessories out of reach of children.

Product specifications

General Features	
Model name	VS20
Color	Black
Interface	HDMI In + HDMI Out + 2 x USB 3.0 (Type-A) + RJ45 (Ethernet) + 1 x USB 2.0 (Type-A)
Button input resolution	Up to 4K 30FPS
Host HDMI-output resolution	HDMI 2.0 (Comply with HDCP 1.4): 4096x2160P60, 4096x2160P50, 4096x2160P24, 3840x2160P60, 3840x2160P50, 3840x2160P24, 1920x1200P60, 1920x1080P60, 1920x1080P50, 1920x1080P30, 1920x1080P24, 720x480P60
Host HDMI-input resolution	HDMI 1.4 (Comply with HDCP 1.4): 1920x1080P60, 1920x1080P50, 1920x1080P30, 1920x1080P24, 1280x720P60, 1280x720P50, 720x480P60, 640x480P60, 720x576P50
Mode	Split screen mode(on/off)
Simultaneous connections	32 pcs
Wi-Fi standard	IEEE 802.11ac, 5GHz, 2T2R IEEE 802.11n, 2.4GHz 5GHz, 2T2R
Maximum data rate	Up to 867Mbps + 300Mbps (at 5GHz + 2.4GHz at 802.11n)
Frequency band	2.4GHz, 5GHz
WiFi authentication	WPA2 (WPA2-PSK (Pre-Shared key) (AES128bit) / WPA2 enterprise (AES256bit)
WAN	1Gbps
Support platform	Windows, Linux, MAC, Chrome
Supported mobile display	• Supporting IOS wireless communication • Supporting Windows wireless communication
Temperature range	Operating: 0°C to +40°C (+32°F to +104°F)
	Storage: -10°C to +60°C (+14°F to +140°F)
Humidity	Storage: 5% to 90% relative humidity, non-condensing
	Operation: 10% to 80% relative humidity, non-condensing
Environmental	
Reach distance	Up to 20m**
Power consumption	Receiver: 11W/36W (Typical/Max)
Standby power consumption	<0.5W
Weight(Net)	530g
Temperature range	Operating: 0°C to +40°C (+32°F to +104°F) Storage: -10°C to +60°C (+14°F to +140°F)
Humidity	Storage: 5% to 90% relative humidity, non-condensing Operation: 10% to 80% relative humidity, non-condensing

InstaShow™ Button			
Cable	USB Type C	Power supply	DC 5V±10%, 0.9A
Reset button	x1	LED	Red/Green/Blue/ White*
Present key	x1	Dimension (WxDxH)	85 x 106 x 24.5mm
Split Screen key	x1 (Share with Pairing Key)	Weight	95g
Mute key	x1		
Power consumption	Up to 4.5W / 3.8W (Operating) / 2.8W (Standby)		
Wireiess transmission protocol	IEEE 802.11 a/n/ac, 5GHz, 2T2R		
Data rate wireless	Up to 867Mbps (at 5GHz for 802.11ac)		
Frequency Band	5GHz		
InstaShow™ Host			
Standby button	x1	RJ45	x1
Power button	x1	Kensington lock	x1
Power DC jack	x1	USB	USB (Touch back): x1 (USB Type-A) USB (Camera & Speaker): x2 (USB Type-A)
Noise Level	Normal: 24dBA	Video	HDMI 2.0 output: x1 HDMI 1.4 input: x1
LED	Red/Green/Blue/White*	Power supply	DC 12V±10%, 3A
Dimension (WxDxH)	145 x 145 x 46mm	Power consumption	Receiver: 11W/36W (Typical/Max)
Weight	332g		
Cradle			
Dimensioin (WxDxH)	85 x 97.5 x 170.4mm	Weight	630g
Package contents			
InstaShow Button	x2	Velcro Strap	x1
InstaShow Host	x1	Quick Start Guide	x1
Cradle	x1	Safety Statement	x1
HDMI Cable	x1	Screws	Yes
Antenna	x4 (Black)	Power Adapter	x1
Tx Spare HDMI Cable	x1		

* See LED indicators of the Button and the Host on page 9 for more information on LED behavior.
** Wireless connection speed and available maximum range depends on wireless environment.

Overview

Button

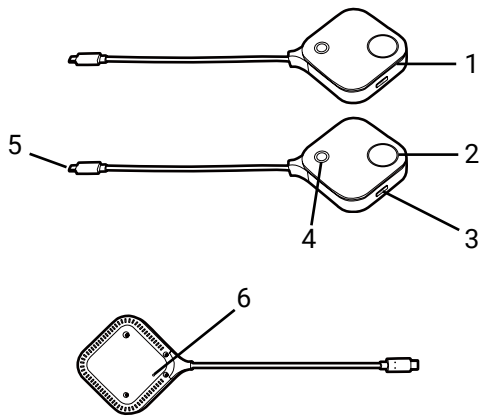

Bottom of a Button

1. **Microphone**

   Captures sound for videoconferences.

2. **Present key with LED indicator**

   Press to start or stop presenting.

3. **Split screen key**

   Press to enable split screen presentations.

4. **Mute key**

   Press to mute the microphone on the Button when it is used as a microphone in a videoconference.

5. **USB-C connector**

   Connect to a computer or laptop.

6. **Reset**

   Poke the reset hole to reset the device if the device stops responding. Refer to Resetting a Button on page 16 for more information.

Host

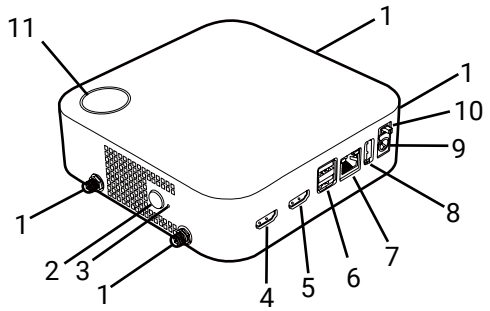

1. **Fixture parts for the Antennas**

   Refer to Assembling the Host on page 12 for more information.

2. **PAIRING key**

   Press to pair with a Button.

3. **RESET**

   Poke the **RESET** hole to reset the device if the device stops responding. Refer to Resetting a Host on page 16 for more information.

4. **HDMI IN port**

   Connect to a video/audio source with the HDMI interface.

5. **HDMI OUT port**

   Connect to a display using an HDMI A(M) to A(M) cable.

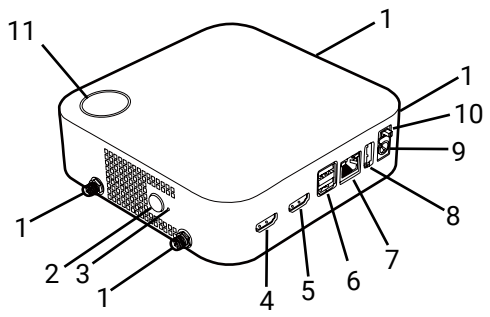

6. **USB 3.0 ports**

   Connect to USB peripherals with the USB 3.0 interface.

7. **WAN port**

   Allows the following connections:
   - Connect the Host to a network for Internet access.
   - Connect the Host to a laptop to access the Host's web management interface.

8. **TOUCH SCREEN USB 2.0 port**

   Connect to a mouse/keyboard with the USB 2.0 interface.

9. **DC 3A port**

   Connect to the supplied adapter extender power cable and adapter to power the Host.

10. **Power switch**

    Slide to power on or off the Host.

11. **Standby button with LED indicator**

    Press to turn the Host on and off.

12 Lid of the Host

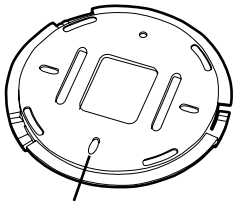

Alignment hole

12. **Lid**

    Refer to Attaching the Host to the ceiling on page 12 for more information.

LED indicators of the Button and the Host

Please refer to the tables below for detailed indicator and status descriptions for the Button and the Host.

LED indicator on the Button	Status Description
Static blue	The device is presenting.
Flashing blue	The device is pairing.
Flashing green	• The device is starting up and connecting to the Host. • The device is downloading the firmware.
Static green	The device is in standby mode and working normally.
Flashing red	The device is unable to connect to a Host.
Off	The device is powered off.
Quick flashing green	The device is upgrading the firmware.
Static white	The device is powering up.

LED indicator for the mute key on the Button	Status Description
Static blue	The microphone is enabled and unmuted.
Static red	The microphone is disabled and muted.

LED indicator on the Host	Status Description
Static blue	The connected device is presenting.
Flashing blue	The device is pairing.
Flashing green	• The device is starting up. • The device is upgrading the firmware.
Static white	• The device is powering up. • The device is in network standby mode.
Static green	The device is ready for presenting.
Off	The device is powered off.

Installation

This section will guide you on how to prepare the unit before its initial use.

Environment check

Before installing your InstaShow™ kit, check the environmental conditions.

1. Do not install the device near heat sources like radiators or direct sunlight, or in a site with excessive dust or humidity.
2. Ambient temperature conditions are listed as below. Maximum ambient temperature should be +40°C or 104°F. Minimum ambient temperature should be +0°C or 32°F. Storage temperature should be -10°C to +60°C (14°F to 140°F).
3. Humidity conditions are listed as below. For storage, the relative humidity should be 5% to 90% (non-condensing). For operation, the relative humidity should be10% to 80% (non-condensing).

As the product works with different displays, the steps required to complete the installation may vary according to the actual environment and your display specifications. Follow the procedures below and refer to the specified sections for details.

1. Assemble the Host with the antennas. See Assembling the Host on page 12 for details.
2. Connect the Host to the display and power properly. See Connecting the HDMI cable and power on page 13 for details. Four installation methods are provided.
   - Attaching the Host to the ceiling
   - Attaching the Host to a ceiling mount
   - Placing the Host on a table
   - Installing the Host on the wall or trolley
3. Connect the Buttons to the desired devices and power properly. See Setting up and powering a Button on page 14 for details.
4. Make sure that all the connected devices have been powered on. Press the source button of the display and make sure that the HDMI source has been transmitted. See Pairing a Button and Host on page 15 for details.

Assembling the Host

Assemble the Host with four antennas by turning the antennas clockwise to fasten them tightly.

Setting up the Host

You are provided with four different ways to position the Host. The total weight of the Host Unit is 332g.

Attaching the Host to the ceiling

1. Place the lid on the ceiling and locate the alignment hole.
2. Use the screws provided to lock the lid to the ceiling.
3. Lock the first hole (1).
4. Lock the other holes (2-4).
5. Rotate the Host counterclockwise to affix the Host to the lid.

- Please only use the screws (M3*16 tapping screw) and screw anchors provided with the kit to mount the Host to the ceiling.
- Please see Positioning the Host antennas on page 13 for guidelines on positioning the antenna to maximize signal reception.

Attaching the Host to a ceiling mount

If the display is mounted on the ceiling:

1. Attach the Host to the ceiling mount using the provided velcro strap.
2. Fix the Host to the mounting holder.
3. Use the supplied velcro to fix the mounting holder and the Host to the ceiling mount.

- Please only use the velcro strap (300(L)mm*25(W)mm) provided with the kit to mount the Host to a ceiling mount.
- Please see Positioning the Host antennas on page 13 for guidelines on positioning the antenna to maximize signal reception.

Placing the Host on a table

If your display is placed on a table, first attach the lid to the Host by following the process described below:

1. Align the lid over the bottom of Host so that the triangle on the bottom side of the lid is aligned to the triangle in the lid compartment, then insert the lid into the lid compartment.
2. Turn the lid counter-clockwise until it clicks into place.
3. When the lid is correctly installed on the Host the alignment hole on the lid should be pointed to the front side of the Host.
4. Attach the rubber feet to the recesses on the lid and put the Host right next to the

display.

- Please only use the rubber foot provided with the kit to attach to the Host.
- Please see Positioning the Host antennas on page 13 for guidelines on positioning the antenna to maximize signal reception.

You can also place the Host on a mobile display trolley.

Positioning the Host antennas

Once you have properly installed the Host, follow the guidelines below to position the antennas to maximize signal reception:

For ceiling installation

Position the antennas so that they are both pointed downwards at an angle roughly perpendicular to the ceiling:

For ceiling mount installation

- Position the antennas so that they are both pointing either upwards or downwards roughly parallel to the ceiling mount:
- If you encounter bad signal reception after initial use of the Host you can manually adjust the antennas so that they tilt at a slight angle to maximize signal reception. When doing so, avoid tilting the antennas toward the ceiling mount:
- Avoid positioning the antennas in a horizontal manner, this may result in a weak signal reception:
- If the Host is attached to a metallic ceiling mount ensure that the antennas are at least 3 cm away from the metal portion of the ceiling mount:

For table placement

Position the antennas so that they are both pointed upwards roughly perpendicular to the table:

Connecting the HDMI cable and power

Once the Host has been positioned properly near the display, connect the HDMI cable and power to ensure signal transmission.

Assembling the adapter

Every adapter provided in the box includes a plug socket and plugs based on the region in which you purchased the product.

To connect the plug of your choice, follow the steps below.

1. Align and insert the plug into the adapter.
2. Push the plug all the way in until it clips into place.

To disconnect the plug, follow the steps below.

1. Push the latch in the middle.

2. Detach the plug by pushing it outward and remove the plug.

Connecting the HDMI cable

Connect the HDMI cable to the HDMI out jack of the Host and the HDMI input jack of the projector.

Power supply via a power adapter

Connect the supplied power adapter to the power jack of the Host, and then plug the other end of the power adapter into a wall socket. The LED indicator on the standby button of the Host lights up static green when the power is supplied. Turn on the power switch on the Host.

For BenQ IFP (Interactive Flat Panel) products, please have power supplied via a power adapter.

Do not keep the device powered on all the time. For better performance, power off the device for 30 minutes every 24 hours then restart it.

LAN connection

The Host can be connected to a local network or directly to a laptop. The LAN connection can be used for InstaShow's video conferencing capabilities, to configure your product, and/or to update the software. Insert a network cable with RJ-45 connectors into the LAN port and connect the other side to a LAN.

Switching to an HDMI and USB-A cable

A product set includes an additional HDMI and USB-A cable which can be installed onto a Button to allow it to work with laptops without a USB-C port. To switch the cable on the Button to the HDMI and USB-A cable, follow the steps below:

1. Remove the two screws on the bottom side of the Button adjacent to the USB-C cable.
2. Pull the plastic end of the USB-C cable to remove it from the Button.
3. Push the HDMI and USB-A cables into the compartment on the Button so that the connectors on the cable are inserted into the corresponding connectors on the Button.
4. Re-install the two screws on the bottom side of the Button.

Setting up and powering a Button

1. Connect the button to a laptop using one of the following methods:
   - Connect the Button's USB-C connector to the corresponding input of a laptop.
   - For Buttons where the connectors have been switched to the HDMI and USB-A cable, connect the Button's HDMI and USB connectors to the corresponding inputs of a laptop.

- For instructions on how to switch to the HDMI and USB-A cable for the Button, see Switching to an HDMI and USB-A cable on page 14.
- From hereinafter the images and text will only feature a Button using the default USB-C cable.

2. The LED indicator of the Button will flash green while the Button is starting up.

3. When the Button is ready to present, the LED indicator will turn solid green. Press the Present key when the LED indicator turns green.

- If the Button encounters problems while pairing with the Host during startup, the LED indicator will flash red. Repeat the previous process again until the LED turns solid green. See LED indicators of the Button and the Host on page 9 for more information on LED behavior.
- Handle the Button cable with care. Rough handling might cause defects.
- Pull/Push the connectors instead of the cable when inserting or removing Buttons.

If you purchase an additional Button (via a Button Kit), please follow the process described below:

1. Follow the pairing instructions described in Pairing a Button and Host on page 15.
2. Connect the Button to the corresponding input of a laptop.
3. The LED indicator of the Button will flash green while the Button is starting up.
4. When the Button is ready to present, the LED indicator will turn solid green. Press the Present key when the LED indicator turns green.

- Handle the Button cable with care. Rough handling might cause defects.
- Pull/Push the connectors instead of the cable when inserting or removing Buttons.

Pairing a Button and Host

A product set includes a Host and two Buttons, which are paired before shipment. In such a case, you don't need to pair them again. However, if you buy two or more product sets, and you want to pair a Button with a different Host, you need to follow the instruction below. If you buy an additional Button kit, and you want to pair the new Buttons with your Host, you need to follow the instruction below as well.

When the Host is placed on a table

1. Make sure your Host is ready with a power supply. Connect the Button to the corresponding input of a laptop.
2. When the new Button is connected to the laptop, the LED indicator of the Button will flash red.

If a Button nearby has been paired with a Host before, it will turn static green.

3. Press the **PAIRING** key of the Host for five seconds, the LED indicator of the Host will blink blue for two minutes, waiting to pair with a Button.

If the Host is attached to the ceiling so that it is not easy to press the **PAIRING** key, please use the pairing process in the web management interface.

4. Press the split screen key on the side of the Button for five seconds. The LED indicator of the Button will blink blue for about 10 seconds. The pairing process is ongoing. The "**Pairing in progress**" message will be shown on the screen.
5. The LED indicator of the Button turns static green and a "**Pairing complete**" message will

be shown when the Host and Button are successfully paired.

The maximum number of Buttons you can pair with one Host is 32.

Storing Buttons and USB cable in the cradle

You are provided with two different ways to store the Buttons in the cradle. Place the Buttons in the cradle vertically (1) or horizontally (2).

Resetting a Host

Resetting a Host allows you to return the Host to its original factory settings. You may want to reset the Host because of either one of the following reasons:

- You want to clear the web management interface of all changes made to its configurations, such as pairing information, passwords, SSID, etc. and return it back to its default settings.
- You are unable to access the web management interface (for instance due to an altered or lost password).

Reset the Host using the following steps:

1. Connect the power port on the Host to a power source and wait for at least 90 seconds.

After the Host has been connected to a power source for at least 90 seconds, the Host LED may indicate any one of the statuses described in LED indicators of the Button and the Host on page 9. As long as the Host has been connected to a power source for at least 90 seconds, you may proceed to the next step of the resetting process regardless of the status of the Host LED.

2. Poke the **RESET** hole at the rear of the Host with a pin for at least 5 seconds.
3. The Host LED will begin quick flashing red (flash red twice every second) for 10 seconds, then light up static white for 3 seconds, indicating that the Host is resetting.
4. Once the Host LED lights up static green the resetting process is complete.

Do not disconnect the Host from its power source at any time during the resetting process.

Resetting a Button

Resetting a Button allows you to return the Button to its original factory settings. You may want to reset a Button because of either one of the following conditions:

- You purchased an additional Button (via a Button Kit) which has not been paired to a Host.
- A Button that was included in the original package has been paired to a different Host (one which was not originally included with the Button in the package), and you want to quickly pair it back to its original Host.
- A Button that was included in the original package has been paired to a different Host (one which was not originally included with the Button in the package), and you want to re-pair the Button to its original Host while the Host is not powered on.

Reset a Button using the following steps:

1. Connect the USB connector on the Button to a powered-on laptop and wait for at least 30 seconds.

After the Button has been connected to a powered on laptop for at least 30 seconds, the Button LED may indicate any one of the statuses described in LED indicators of the Button and the Host on page 9. As long as the Button has been connected to a powered on laptop for at least 30 seconds, you may proceed to the next step of the resetting process regardless of the status of the Button LED.

2. Poke the **RESET** hole at the bottom of the Button with a pin for at least 5 seconds.
3. The Button LED will begin quick flashing red (flash red twice every second) for 10 seconds, then light up static white for 2 seconds, indicating that the Button is resetting.
4. Once the Button LED lights up static green the resetting process is complete.

Do not disconnect the Button from its power source at any time during the resetting process.

Enabling network standby mode

You can set the Host to enter network standby mode after a period of inactivity. To set the time of inactivity, go to **Web Management** > **Advance Setting** > **Network Standby**.

To enable network standby mode, do one of the following:

- wait for the Host to enter network standby mode automatically if no wireless devices (e.g., a Button, a mobile device, or a laptop) being connected to the Host's SSID and no data (from any USB devices such as a mouse, a keyboard, or from touch back function) being transmitted to the Host within the set time.
- if there is no wireless devices being connected to the Host's SSID within the set time, press the standby button on the Host to enable network standby mode immediately.

The LED indicator on the Host lights up static white when it is in network standby mode.

The network standby mode is disabled when

- a wireless device is connected to the Host's SSID; or
- data (from any USB devices such as a mouse, a keyboard, or from touch back function) is transmitted to the Host; or
- you press the standby button on the Host.

Starting and stopping presentations

This section will guide you on how to start and stop a presentation using the product.

Getting ready

Make sure that all the connected devices have been powered on and ready for the presentation.

As the product could work with different projectors, IFPs, TVs, or monitors with standard HDMI ports, the steps required to start a presentation may vary according to the actual environment and your display specifications. Follow the procedures below and refer to the specified sections for details.

1. To start a presentation, see Starting presentation on page 18 for details.
2. To stop a presentation, see Idle presentation on page 18 for details.
3. To start a split-screen presentation, see Split screen presentations on page 18 for details.
4. To control presentations via a touchscreen displays or mouse/keyboard see Touch back on page 19 for details.

Starting presentation

1. Make sure power is supplied to the Host. See Connecting the HDMI cable and power on page 13 for more information.
2. Choose the HDMI source corresponding to the Host on the display. You will see the Guide screen.
3. Please follow the instruction on the Guide screen to supply power to the Button. You can also see Setting up and powering a Button on page 14 for more information. The LED indicator on the Button is static green when the Button is connected and working properly.
4. To start a presentation, press the Present key.
5. The device starts presenting, and the LED indicator of the Button turns static blue.

- Make sure the transmission distance between the Button and Host is within 15 meters and with no obstacles.
- The product supports MacBooks and Windows laptops to mirror an extended desktop.

Idle presentation

1. To stop a presentation, press the Present key.
2. The device stops presenting, and the LED indicator of the Button turns green.
3. Users can press the Present key to return to the presentation.

Split screen presentations

The product allows up to 8 users to present simultaneously in a split screen orientation.

Starting a split screen presentation

1. Connect a Button to each computer that will be presenting in the split screen presentation. See Setting up and powering a Button on page 14 for more information.

Make sure that all Buttons have already been paired to the Host projecting the presentation. See Pairing a Button and Host on page 15 for more information.

2. Start a normal presentation using one of the Host buttons. See Starting presentation on page 18 for more information.
3. Press the split screen button on the Host that started the presentation to enable split screen presentations.
4. Once a notification appears on-screen indicating that the split screen function has been enabled, press the Present key on the Button of the second computer that wants to join the split screen presentation.
5. Repeat step 4 for all other users that want to join the split screen presentation.

- Only up to 8 users are simultaneously supported in a split screen presentation.
- The layout of the split screen presentation will be dictated by the amount of users in the presentation.
- If split screen is not enabled by the initial Button, all subsequent connections by other Buttons will be full screen presentations.

Switching from a split screen to a full screen presentation

Once in a split screen presentation you can switch to a full screen presentation of any of the participant's screen by pressing the split screen button on the Button of the computer that wants to present in a full screen.

To return to a split screen presentation repeat the steps in Starting a split screen presentation on page 19.

Touch back

When a Host is connected to a touchscreen display and a PC is presenting via a Button, you can use a USB Type-A cable to connect the **TOUCH SCREEN USB 2.0** USB port located at the rear of the Host to the touch input USB port of the display to control the interface of the PC remotely via touch gestures on the display.

The product only supports touch back for Windows-based PCs. It does not support touch back for MacBooks or smartphones connected via the InstaShare app.

ecoFACT
csr.BenQ.com

HDMI™
HIGH-DEFINITION MULTIMEDIA INTERFACE

EAC

BenQ.com

© 2022 BenQ Corporation.
All rights reserved. Rights of modification reserved.