Appendix B

Measurement Plots

Date/Time: 5/3/2006 12:34:36

Test Laboratory: ELECTRONIC TECHNOLOGY SYSTEMS DR. GENZ GMBH

Dipol Valid.1900(h)_250mW3.5.2006

DUT: Dipole 1900 MHz; Type: D1900V2; Serial: 5d025

Communication System: CW; Frequency: 1900 MHz;Duty Cycle: 1:1
Medium: Head 1900 MHz Medium parameters used: f = 1900 MHz; σ = 1.42 mho/m; ε_r = 39.9; ρ = 1000 kg/m^3
Phantom section: Flat Section

DASY4 Configuration:

- Probe: ET3DV6 - SN1711; ConvF(4.84, 4.84, 4.84); Calibrated: 11/21/2005
- Sensor-Surface: 4mm (Mechanical And Optical Surface Detection)
- Electronics: DAE3 Sn522; Calibrated: 11/23/2005
- Phantom: SAM 12; Type: TP-1217; Serial: QD000P40CA
- Measurement SW: DASY4, V4.6 Build 23; Postprocessing SW: SEMCAD, V1.8 Build 160

Dipol 1900 (250mW)/Area Scan (61x81x1): Measurement grid: dx=10mm, dy=10mm
Maximum value of SAR (interpolated) = 12.4 mW/g

Dipol 1900 (250mW)/Zoom Scan (7x7x7)/Cube 0: Measurement grid: dx=5mm, dy=5mm, dz=5mm
Reference Value = 97.1 V/m; Power Drift = -0.009 dB
Peak SAR (extrapolated) = 18.8 W/kg
SAR(1 g) = 10.8 mW/g; SAR(10 g) = 5.62 mW/g
Maximum value of SAR (measured) = 12.4 mW/g

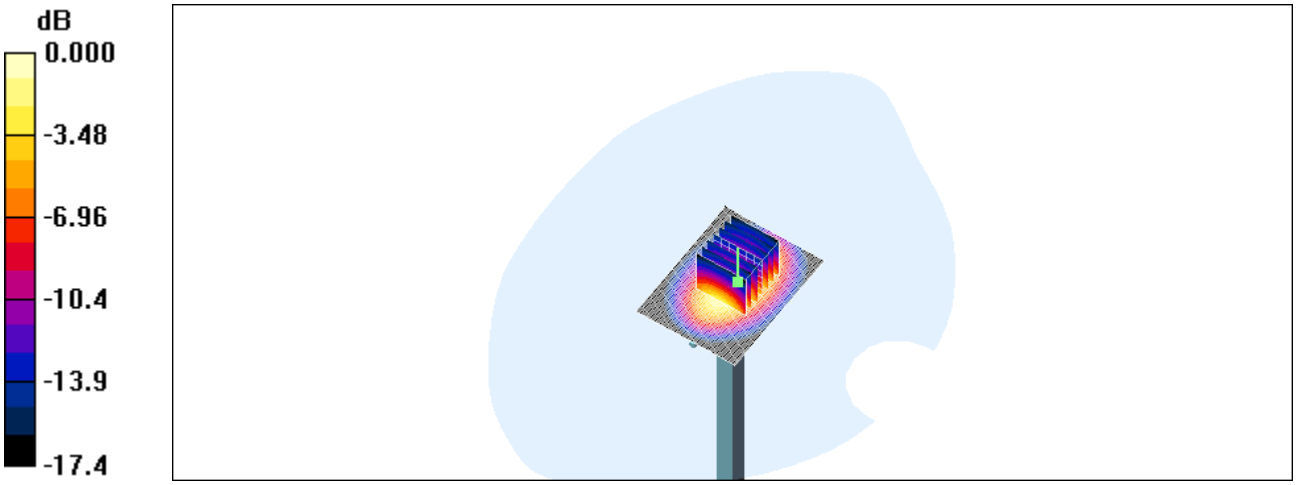

0 dB = 12.4mW/g

Date/Time: 5/3/2006 13:10:24

Test Laboratory: ELECTRONIC TECHNOLOGY SYSTEMS DR. GENZ GMBH

Dipol Valid.1900(m)_250mW3.5.2006

DUT: Dipole 1900 MHz; Type: D1900V2; Serial: 5d025

Communication System: CW; Frequency: 1900 MHz;Duty Cycle: 1:1
Medium: Muscle 1900 MHz Medium parameters used: f = 1900 MHz; σ = 1.58 mho/m; ε_r = 51.9; ρ = 1000 kg/m^3
Phantom section: Flat Section

DASY4 Configuration:

- Probe: ET3DV6 - SN1711; ConvF(4.31, 4.31, 4.31); Calibrated: 11/21/2005
- Sensor-Surface: 4mm (Mechanical And Optical Surface Detection)
- Electronics: DAE3 Sn522; Calibrated: 11/23/2005
- Phantom: SAM 12; Type: TP-1217; Serial: QD000P40CA
- Measurement SW: DASY4, V4.6 Build 23; Postprocessing SW: SEMCAD, V1.8 Build 160

Dipol 1900 (250mW)/Area Scan (61x81x1): Measurement grid: dx=10mm, dy=10mm
Maximum value of SAR (interpolated) = 13.3 mW/g

Dipol 1900 (250mW)/Zoom Scan (7x7x7)/Cube 0: Measurement grid: dx=5mm, dy=5mm, dz=5mm
Reference Value = 88.1 V/m; Power Drift = 0.000 dB
Peak SAR (extrapolated) = 19.3 W/kg
SAR(1 g) = 11.3 mW/g; SAR(10 g) = 5.99 mW/g
Maximum value of SAR (measured) = 12.8 mW/g

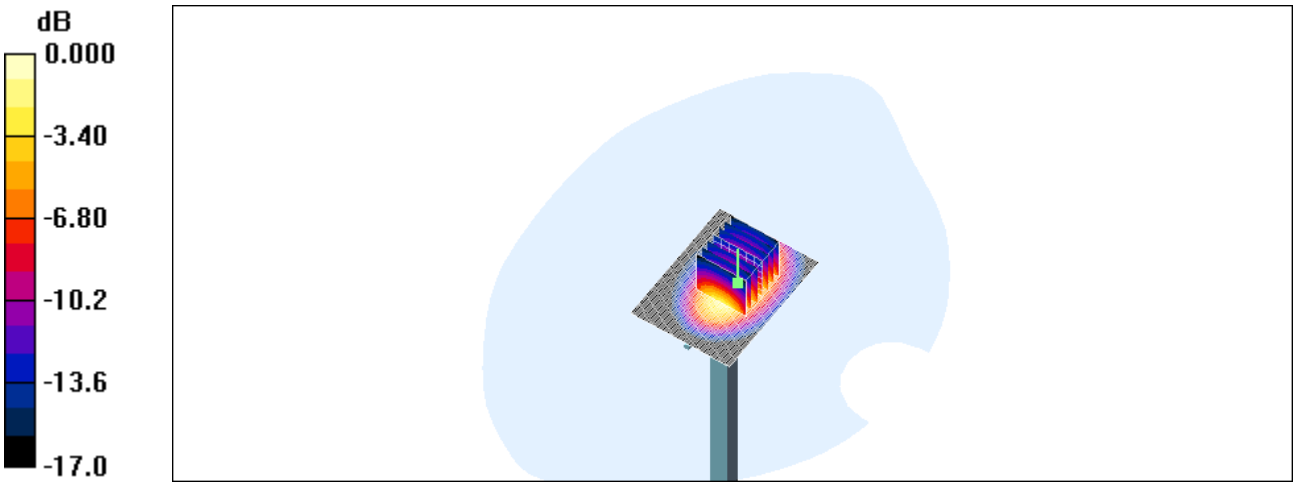

0 dB = 12.8mW/g

Date/Time: 5/5/2006 12:49:37

Test Laboratory: ELECTRONIC TECHNOLOGY SYSTEMS DR. GENZ GMBH

Dipol Valid.1900(m)_250mW5.5.2006

DUT: Dipole 1900 MHz; Type: D1900V2; Serial: 5d025

Communication System: CW; Frequency: 1900 MHz;Duty Cycle: 1:1
Medium: Muscle 1900 MHz Medium parameters used: f = 1900 MHz; σ = 1.58 mho/m; ε_r = 51.9; ρ = 1000 kg/m^3
Phantom section: Flat Section

DASY4 Configuration:

- Probe: ET3DV6 - SN1711; ConvF(4.31, 4.31, 4.31); Calibrated: 11/21/2005
- Sensor-Surface: 4mm (Mechanical And Optical Surface Detection)
- Electronics: DAE3 Sn522; Calibrated: 11/23/2005
- Phantom: SAM 12; Type: TP-1217; Serial: QD000P40CA
- Measurement SW: DASY4, V4.6 Build 23; Postprocessing SW: SEMCAD, V1.8 Build 160

Dipol 1900 (250mW)/Area Scan (61x81x1): Measurement grid: dx=10mm, dy=10mm
Maximum value of SAR (interpolated) = 13.3 mW/g

Dipol 1900 (250mW)/Zoom Scan (7x7x7)/Cube 0: Measurement grid: dx=5mm, dy=5mm, dz=5mm
Reference Value = 86.2 V/m; Power Drift = -0.026 dB
Peak SAR (extrapolated) = 19.7 W/kg
SAR(1 g) = 11.5 mW/g; SAR(10 g) = 6.04 mW/g
Maximum value of SAR (measured) = 12.9 mW/g

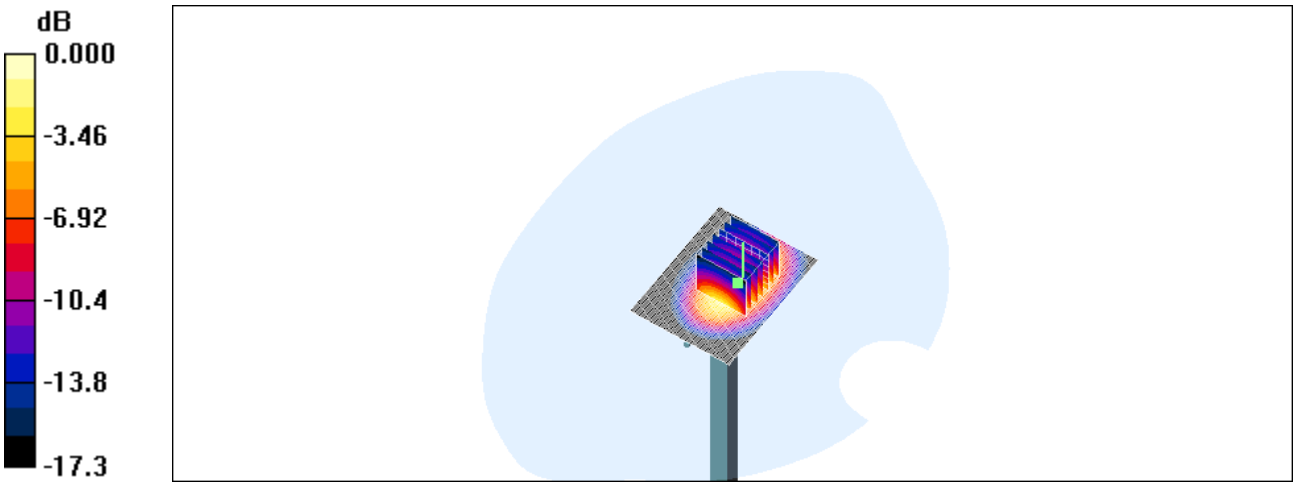

0 dB = 12.9mW/g

Date/Time: 5/5/2006 11:42:30

Test Laboratory: ELECTRONIC TECHNOLOGY SYSTEMS DR. GENZ GMBH

Dipol Valid.900 (m)_250mW 5.5.2006

DUT: Dipole 900 MHz; Type: D900V2; Serial: 164

Communication System: CW; Frequency: 900 MHz;Duty Cycle: 1:1
Medium: Muscle 900 MHz Medium parameters used: f = 900 MHz; σ = 1.04 mho/m; ε_r = 54.4; ρ = 1000 kg/m^3
Phantom section: Flat Section

DASY4 Configuration:

- Probe: ET3DV6 - SN1711; ConvF(5.73, 5.73, 5.73); Calibrated: 11/21/2005
- Sensor-Surface: 4mm (Mechanical And Optical Surface Detection)
- Electronics: DAE3 Sn522; Calibrated: 11/23/2005
- Phantom: SAM 12; Type: TP-1217; Serial: QD000P40CA
- Measurement SW: DASY4, V4.6 Build 23; Postprocessing SW: SEMCAD, V1.8 Build 160

Dipol 900 (250mW)/Area Scan (81x161x1): Measurement grid: dx=10mm, dy=10mm
Maximum value of SAR (interpolated) = 3.24 mW/g

Dipol 900 (250mW)/Zoom Scan (7x7x7)/Cube 0: Measurement grid: dx=5mm, dy=5mm, dz=5mm
Reference Value = 56.7 V/m; Power Drift = 0.009 dB
Peak SAR (extrapolated) = 4.57 W/kg
SAR(1 g) = 2.95 mW/g; SAR(10 g) = 1.87 mW/g
Maximum value of SAR (measured) = 3.19 mW/g

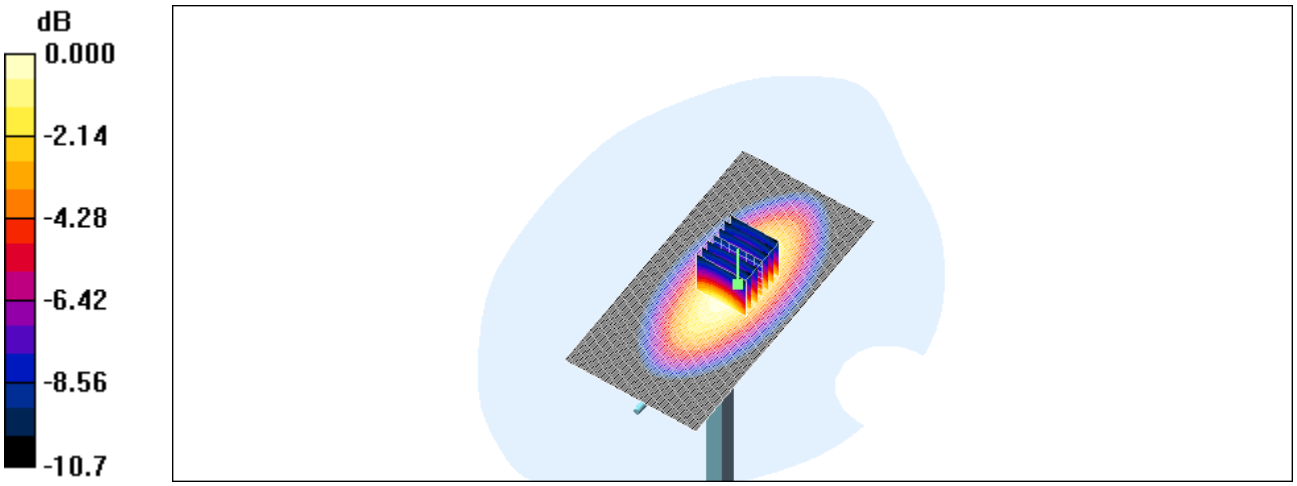

0 dB = 3.19mW/g

Date/Time: 5/10/2006 10:59:54

Test Laboratory: ELECTRONIC TECHNOLOGY SYSTEMS DR. GENZ GMBH

Dipol Valid.900 (h)_250mW 10.05.2006

DUT: Dipole 900 MHz; Type: D900V2; Serial: 164

Communication System: CW; Frequency: 900 MHz;Duty Cycle: 1:1
Medium: Head 900 MHz Medium parameters used: f = 900 MHz; σ = 0.972 mho/m; ε_r = 43.1; ρ = 1000 kg/m^3
Phantom section: Flat Section

DASY4 Configuration:

- Probe: ET3DV6 - SN1711; ConvF(5.99, 5.99, 5.99); Calibrated: 11/21/2005
- Sensor-Surface: 4mm (Mechanical And Optical Surface Detection)
- Electronics: DAE3 Sn522; Calibrated: 11/23/2005
- Phantom: SAM 12; Type: TP-1217; Serial: QD000P40CA
- Measurement SW: DASY4, V4.6 Build 23; Postprocessing SW: SEMCAD, V1.8 Build 160

Dipol 900 (250mW)/Area Scan (81x161x1): Measurement grid: dx=10mm, dy=10mm
Maximum value of SAR (interpolated) = 2.93 mW/g

Dipol 900 (250mW)/Zoom Scan (7x7x7)/Cube 0: Measurement grid: dx=5mm, dy=5mm, dz=5mm
Reference Value = 58.0 V/m; Power Drift = -0.028 dB
Peak SAR (extrapolated) = 3.96 W/kg
SAR(1 g) = 2.71 mW/g; SAR(10 g) = 1.75 mW/g
Maximum value of SAR (measured) = 2.97 mW/g

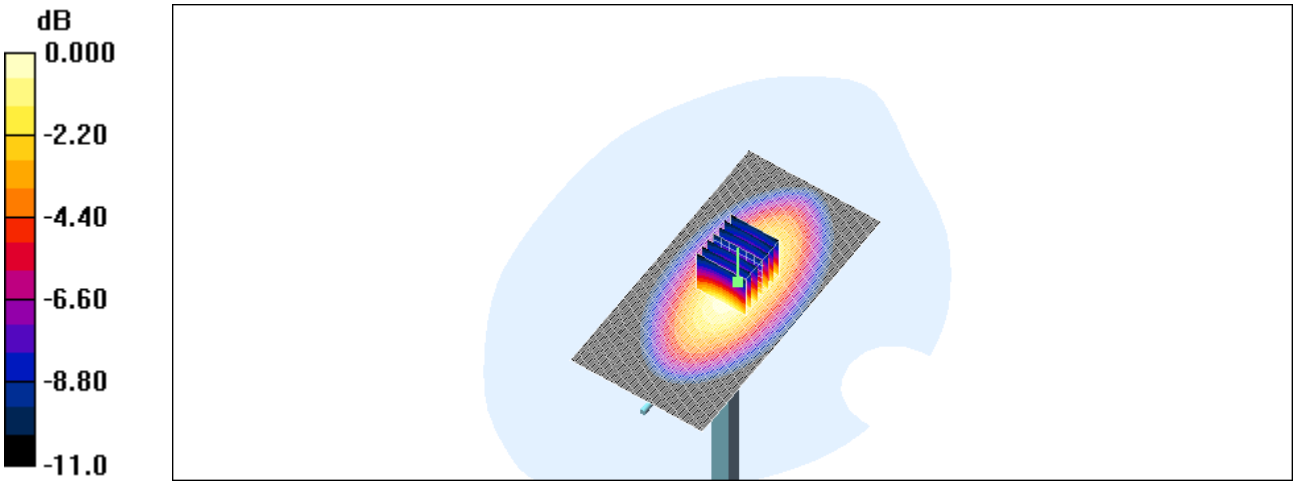

0 dB = 2.97mW/g

Date/Time: 5/3/2006 08:31:06

Test Laboratory: ELECTRONIC TECHNOLOGY SYSTEMS DR. GENZ GMBH

1900_right_ch512_cheek

DUT: Dual Band GSM 850 / PCS1900 (with WAP & GPRS); Type: PG-1910; Serial: ---

Communication System: GSM 1900; Frequency: 1850.2 MHz;Duty Cycle: 1:8.3
Medium: Head 1900 MHz Medium parameters used: f = 1850.2 MHz; σ = 1.37 mho/m; ε_r = 39.9; ρ = 1000 kg/m^3
Phantom section: Right Section

DASY4 Configuration:

- Probe: ET3DV6 - SN1711; ConvF(4.84, 4.84, 4.84); Calibrated: 11/21/2005
- Sensor-Surface: 4mm (Mechanical And Optical Surface Detection)
- Electronics: DAE3 Sn522; Calibrated: 11/23/2005
- Phantom: SAM 12; Type: TP-1217; Serial: QD000P40CA
- Measurement SW: DASY4, V4.6 Build 23; Postprocessing SW: SEMCAD, V1.8 Build 160

PG-1910/Area Scan (91x141x1): Measurement grid: dx=10mm, dy=10mm
Maximum value of SAR (interpolated) = 0.943 mW/g

PG-1910/Zoom Scan (7x7x7)/Cube 0: Measurement grid: dx=5mm, dy=5mm, dz=5mm
Reference Value = 20.4 V/m; Power Drift = -0.078 dB
Peak SAR (extrapolated) = 1.29 W/kg
SAR(1 g) = 0.835 mW/g; SAR(10 g) = 0.547 mW/g

Maximum value of SAR (measured) = 0.910 mW/g

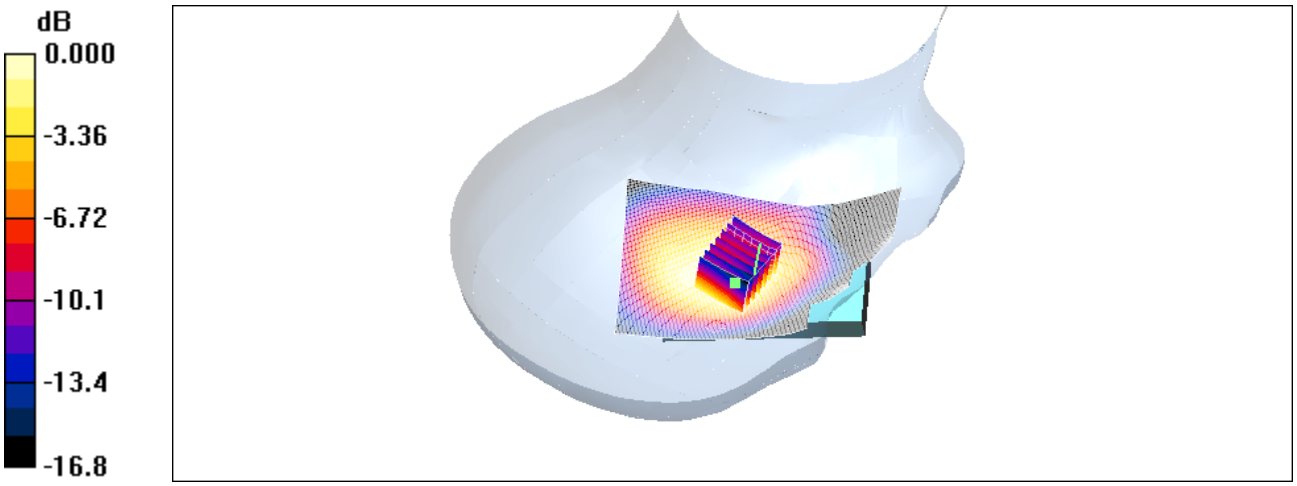

0 dB = 0.910mW/g

Date/Time: 5/3/2006 07:48:44

Test Laboratory: ELECTRONIC TECHNOLOGY SYSTEMS DR. GENZ GMBH

1900_right_ch661_cheek

DUT: Dual Band GSM 850 / PCS1900 (with WAP & GPRS); Type: PG-1910; Serial: ---

Communication System: GSM 1900; Frequency: 1880 MHz;Duty Cycle: 1:8.3
Medium: Head 1900 MHz Medium parameters used: f = 1880 MHz; σ = 1.4 mho/m; ε_r = 39.9; ρ = 1000 kg/m^3
Phantom section: Right Section

DASY4 Configuration:

- Probe: ET3DV6 - SN1711; ConvF(4.84, 4.84, 4.84); Calibrated: 11/21/2005
- Sensor-Surface: 4mm (Mechanical And Optical Surface Detection)
- Electronics: DAE3 Sn522; Calibrated: 11/23/2005
- Phantom: SAM 12; Type: TP-1217; Serial: QD000P40CA
- Measurement SW: DASY4, V4.6 Build 23; Postprocessing SW: SEMCAD, V1.8 Build 160

PG-1910/Area Scan (91x141x1): Measurement grid: dx=10mm, dy=10mm
Maximum value of SAR (interpolated) = 0.982 mW/g

PG-1910/Zoom Scan (7x7x7)/Cube 0: Measurement grid: dx=5mm, dy=5mm, dz=5mm
Reference Value = 21.7 V/m; Power Drift = -0.048 dB
Peak SAR (extrapolated) = 1.39 W/kg
SAR(1 g) = 0.884 mW/g; SAR(10 g) = 0.577 mW/g
Maximum value of SAR (measured) = 0.984 mW/g

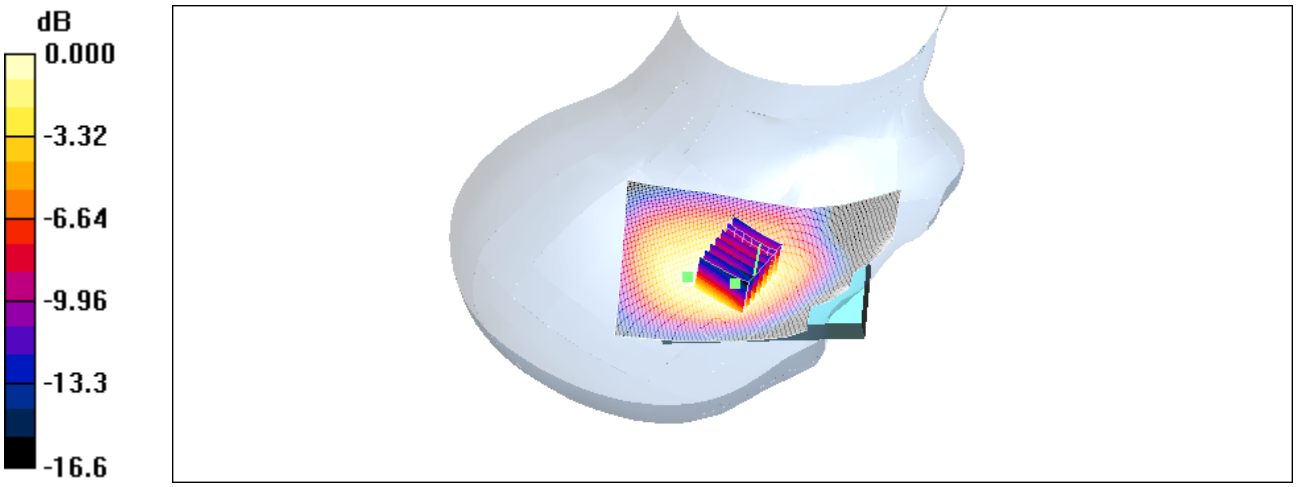

0 dB = 0.984mW/g

Date/Time: 5/3/2006 09:28:34

Test Laboratory: ELECTRONIC TECHNOLOGY SYSTEMS DR. GENZ GMBH

1900_right_ch661_tilted

DUT: Dual Band GSM 850 / PCS1900 (with WAP & GPRS); Type: PG-1910; Serial: ---

Communication System: GSM 1900; Frequency: 1880 MHz;Duty Cycle: 1:8.3
Medium: Head 1900 MHz Medium parameters used: f = 1880 MHz; σ = 1.4 mho/m; ε_r = 39.9; ρ = 1000 kg/m^3
Phantom section: Right Section

DASY4 Configuration:

- Probe: ET3DV6 - SN1711; ConvF(4.84, 4.84, 4.84); Calibrated: 11/21/2005
- Sensor-Surface: 4mm (Mechanical And Optical Surface Detection)
- Electronics: DAE3 Sn522; Calibrated: 11/23/2005
- Phantom: SAM 12; Type: TP-1217; Serial: QD000P40CA
- Measurement SW: DASY4, V4.6 Build 23; Postprocessing SW: SEMCAD, V1.8 Build 160

PG-1910/Area Scan (91x141x1): Measurement grid: dx=10mm, dy=10mm
Maximum value of SAR (interpolated) = 0.555 mW/g

PG-1910/Zoom Scan (7x7x7)/Cube 0: Measurement grid: dx=5mm, dy=5mm, dz=5mm
Reference Value = 19.4 V/m; Power Drift = -0.077 dB
Peak SAR (extrapolated) = 0.863 W/kg
SAR(1 g) = 0.487 mW/g; SAR(10 g) = 0.276 mW/g
Maximum value of SAR (measured) = 0.556 mW/g

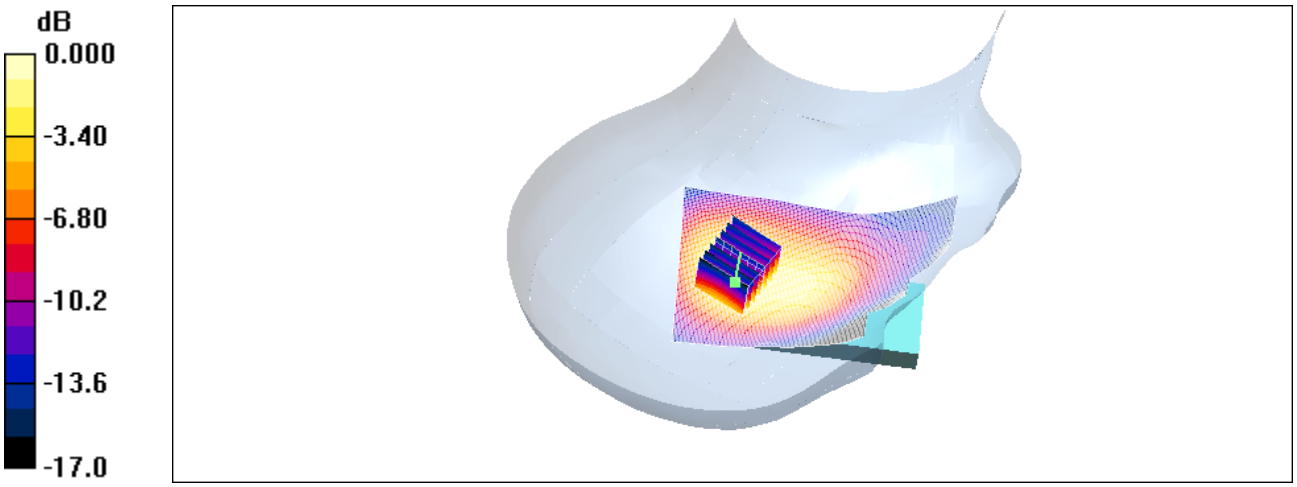

0 dB = 0.556mW/g

Date/Time: 5/3/2006 08:59:44

Test Laboratory: ELECTRONIC TECHNOLOGY SYSTEMS DR. GENZ GMBH

1900_right_ch810_cheek

DUT: Dual Band GSM 850 / PCS1900 (with WAP & GPRS); Type: PG-1910; Serial: ---

Communication System: GSM 1900; Frequency: 1909.8 MHz;Duty Cycle: 1:8.3
Medium: Head 1900 MHz Medium parameters used: f = 1909.8 MHz; σ = 1.43 mho/m; ε_r = 39.8; ρ = 1000 kg/m^3
Phantom section: Right Section

DASY4 Configuration:

- Probe: ET3DV6 - SN1711; ConvF(4.84, 4.84, 4.84); Calibrated: 11/21/2005
- Sensor-Surface: 4mm (Mechanical And Optical Surface Detection)
- Electronics: DAE3 Sn522; Calibrated: 11/23/2005
- Phantom: SAM 12; Type: TP-1217; Serial: QD000P40CA
- Measurement SW: DASY4, V4.6 Build 23; Postprocessing SW: SEMCAD, V1.8 Build 160

PG-1910/Area Scan (91x141x1): Measurement grid: dx=10mm, dy=10mm
Maximum value of SAR (interpolated) = 0.870 mW/g

PG-1910/Zoom Scan (7x7x7)/Cube 0: Measurement grid: dx=5mm, dy=5mm, dz=5mm
Reference Value = 20.7 V/m; Power Drift = -0.046 dB
Peak SAR (extrapolated) = 1.18 W/kg
SAR(1 g) = 0.813 mW/g; SAR(10 g) = 0.515 mW/g

Maximum value of SAR (measured) = 0.909 mW/g

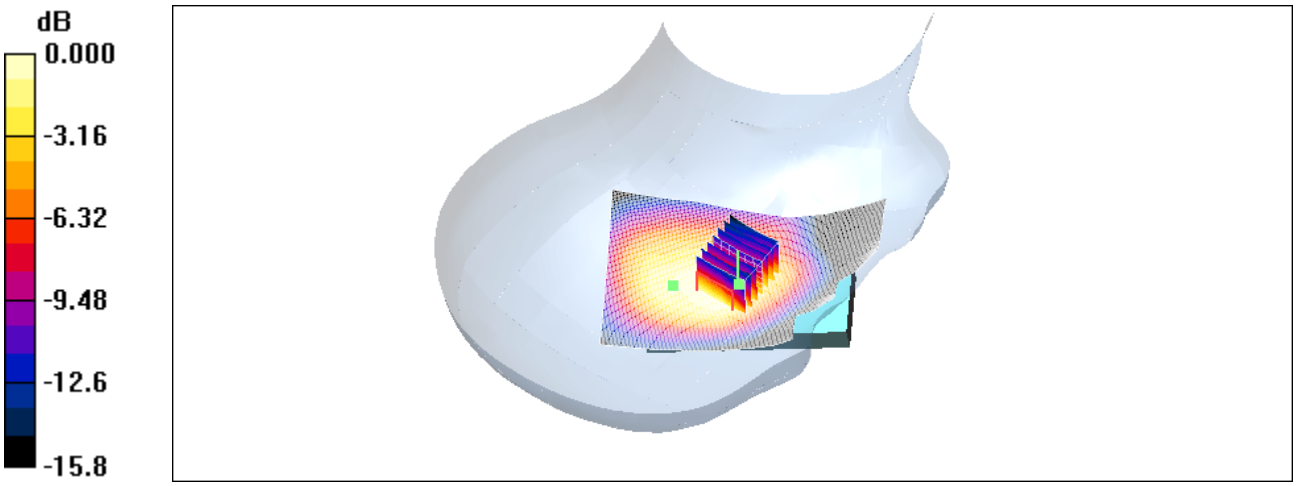

0 dB = 0.909mW/g

Date/Time: 5/3/2006 11:05:40

Test Laboratory: ELECTRONIC TECHNOLOGY SYSTEMS DR. GENZ GMBH

1900_left_ch512_cheek

DUT: Dual Band GSM 850 / PCS1900 (with WAP & GPRS); Type: PG-1910; Serial: ---

Communication System: GSM 1900; Frequency: 1850.2 MHz;Duty Cycle: 1:8.3
Medium: Head 1900 MHz Medium parameters used: f = 1850.2 MHz; σ = 1.37 mho/m; ε_r = 39.9; ρ = 1000 kg/m^3
Phantom section: Left Section

DASY4 Configuration:

- Probe: ET3DV6 - SN1711; ConvF(4.84, 4.84, 4.84); Calibrated: 11/21/2005
- Sensor-Surface: 4mm (Mechanical And Optical Surface Detection)
- Electronics: DAE3 Sn522; Calibrated: 11/23/2005
- Phantom: SAM 12; Type: TP-1217; Serial: QD000P40CA
- Measurement SW: DASY4, V4.6 Build 23; Postprocessing SW: SEMCAD, V1.8 Build 160

PG-1910/Area Scan (91x141x1): Measurement grid: dx=10mm, dy=10mm
Maximum value of SAR (interpolated) = 1.13 mW/g

PG-1910/Zoom Scan (7x7x7)/Cube 0: Measurement grid: dx=5mm, dy=5mm, dz=5mm
Reference Value = 21.0 V/m; Power Drift = -0.021 dB
Peak SAR (extrapolated) = 1.59 W/kg
SAR(1 g) = 1.03 mW/g; SAR(10 g) = 0.626 mW/g
Maximum value of SAR (measured) = 1.14 mW/g

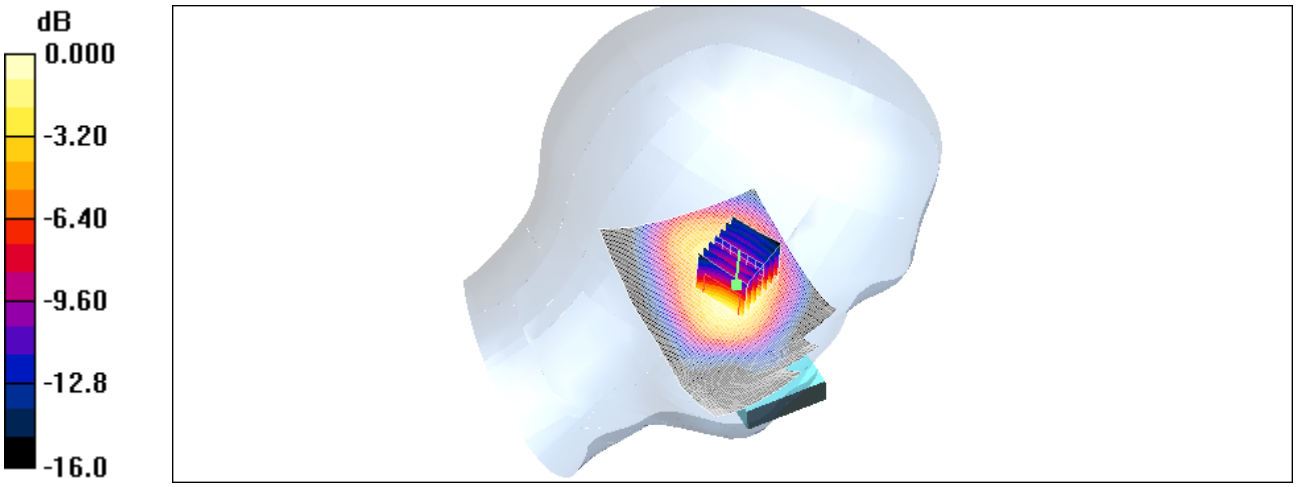

0 dB = 1.14mW/g

Date/Time: 5/3/2006 10:32:41

Test Laboratory: ELECTRONIC TECHNOLOGY SYSTEMS DR. GENZ GMBH

1900_left_ch661_cheek

DUT: Dual Band GSM 850 / PCS1900 (with WAP & GPRS); Type: PG-1910; Serial: ---

Communication System: GSM 1900; Frequency: 1880 MHz;Duty Cycle: 1:8.3
Medium: Head 1900 MHz Medium parameters used: f = 1880 MHz; σ = 1.4 mho/m; ε_r = 39.9; ρ = 1000 kg/m^3
Phantom section: Left Section

DASY4 Configuration:

- Probe: ET3DV6 - SN1711; ConvF(4.84, 4.84, 4.84); Calibrated: 11/21/2005
- Sensor-Surface: 4mm (Mechanical And Optical Surface Detection)
- Electronics: DAE3 Sn522; Calibrated: 11/23/2005
- Phantom: SAM 12; Type: TP-1217; Serial: QD000P40CA
- Measurement SW: DASY4, V4.6 Build 23; Postprocessing SW: SEMCAD, V1.8 Build 160

PG-1910/Area Scan (91x141x1): Measurement grid: dx=10mm, dy=10mm
Maximum value of SAR (interpolated) = 1.21 mW/g

PG-1910/Zoom Scan (7x7x7)/Cube 0: Measurement grid: dx=5mm, dy=5mm, dz=5mm
Reference Value = 22.0 V/m; Power Drift = -0.041 dB
Peak SAR (extrapolated) = 1.67 W/kg
SAR(1 g) = 1.11 mW/g; SAR(10 g) = 0.664 mW/g
Maximum value of SAR (measured) = 1.25 mW/g

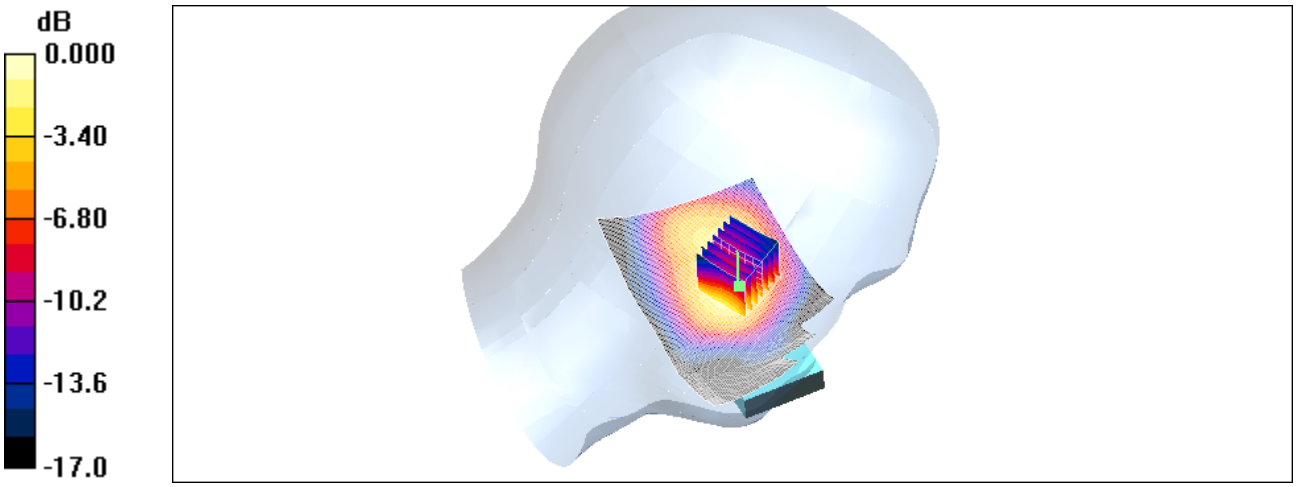

0 dB = 1.25mW/g

Date/Time: 5/3/2006 10:01:55

Test Laboratory: ELECTRONIC TECHNOLOGY SYSTEMS DR. GENZ GMBH

1900_left_ch661_tilted

DUT: Dual Band GSM 850 / PCS1900 (with WAP & GPRS); Type: PG-1910; Serial: ---

Communication System: GSM 1900; Frequency: 1880 MHz;Duty Cycle: 1:8.3
Medium: Head 1900 MHz Medium parameters used: f = 1880 MHz; σ = 1.4 mho/m; ε_r = 39.9; ρ = 1000 kg/m^3
Phantom section: Left Section

DASY4 Configuration:

- Probe: ET3DV6 - SN1711; ConvF(4.84, 4.84, 4.84); Calibrated: 11/21/2005
- Sensor-Surface: 4mm (Mechanical And Optical Surface Detection)
- Electronics: DAE3 Sn522; Calibrated: 11/23/2005
- Phantom: SAM 12; Type: TP-1217; Serial: QD000P40CA
- Measurement SW: DASY4, V4.6 Build 23; Postprocessing SW: SEMCAD, V1.8 Build 160

PG-1910/Area Scan (91x141x1): Measurement grid: dx=10mm, dy=10mm
Maximum value of SAR (interpolated) = 0.498 mW/g

PG-1910/Zoom Scan (7x7x7)/Cube 0: Measurement grid: dx=5mm, dy=5mm, dz=5mm
Reference Value = 19.8 V/m; Power Drift = -0.007 dB
Peak SAR (extrapolated) = 0.817 W/kg
SAR(1 g) = 0.464 mW/g; SAR(10 g) = 0.261 mW/g
Maximum value of SAR (measured) = 0.515 mW/g

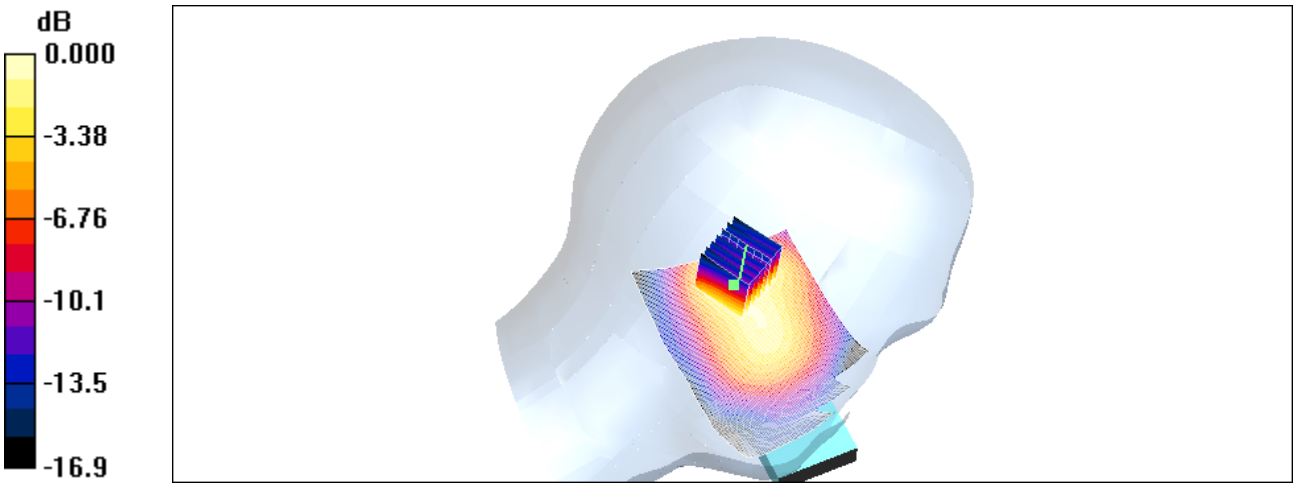

0 dB = 0.515mW/g

Date/Time: 5/3/2006 11:33:19

Test Laboratory: ELECTRONIC TECHNOLOGY SYSTEMS DR. GENZ GMBH

1900_left_ch810_cheek

DUT: Dual Band GSM 850 / PCS1900 (with WAP & GPRS); Type: PG-1910; Serial: ---

Communication System: GSM 1900; Frequency: 1909.8 MHz;Duty Cycle: 1:8.3
Medium: Head 1900 MHz Medium parameters used: f = 1909.8 MHz; σ = 1.43 mho/m; ε_r = 39.8; ρ = 1000 kg/m^3
Phantom section: Left Section

DASY4 Configuration:

- Probe: ET3DV6 - SN1711; ConvF(4.84, 4.84, 4.84); Calibrated: 11/21/2005
- Sensor-Surface: 4mm (Mechanical And Optical Surface Detection)
- Electronics: DAE3 Sn522; Calibrated: 11/23/2005
- Phantom: SAM 12; Type: TP-1217; Serial: QD000P40CA
- Measurement SW: DASY4, V4.6 Build 23; Postprocessing SW: SEMCAD, V1.8 Build 160

PG-1910/Area Scan (91x141x1): Measurement grid: dx=10mm, dy=10mm
Maximum value of SAR (interpolated) = 1.17 mW/g

PG-1910/Zoom Scan (7x7x7)/Cube 0: Measurement grid: dx=5mm, dy=5mm, dz=5mm
Reference Value = 21.2 V/m; Power Drift = 0.021 dB
Peak SAR (extrapolated) = 1.66 W/kg
SAR(1 g) = 1.04 mW/g; SAR(10 g) = 0.620 mW/g
Maximum value of SAR (measured) = 1.19 mW/g

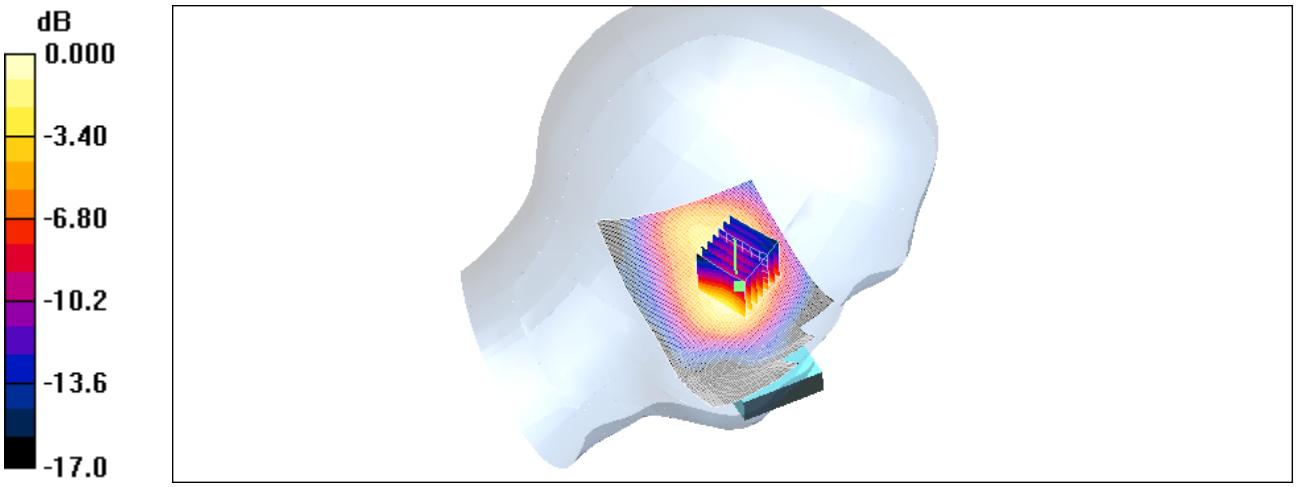

0 dB = 1.19mW/g

Date/Time: 5/3/2006 14:29:48

Test Laboratory: ELECTRONIC TECHNOLOGY SYSTEMS DR. GENZ GMBH

1900_flat_back_ch512_dist 5mm

DUT: Dual Band GSM 850 /PCS1900 (with WAP & GPRS); Type: ---; Serial: PG-1910

Communication System: GSM 1900; Frequency: 1850.2 MHz;Duty Cycle: 1:8.3
Medium: Muscle 1900 MHz Medium parameters used: f = 1850.2 MHz; σ = 1.51 mho/m; ε_r = 52; ρ = 1000 kg/m^3
Phantom section: Flat Section

DASY4 Configuration:

- Probe: ET3DV6 - SN1711; ConvF(4.31, 4.31, 4.31); Calibrated: 11/21/2005
- Sensor-Surface: 4mm (Mechanical And Optical Surface Detection)
- Electronics: DAE3 Sn522; Calibrated: 11/23/2005
- Phantom: SAM 12; Type: TP-1217; Serial: QD000P40CA
- Measurement SW: DASY4, V4.6 Build 23; Postprocessing SW: SEMCAD, V1.8 Build 160

PG-1910/Area Scan (81x141x1): Measurement grid: dx=10mm, dy=10mm
Maximum value of SAR (interpolated) = 1.24 mW/g

PG-1910/Zoom Scan (7x7x7)/Cube 0: Measurement grid: dx=5mm, dy=5mm, dz=5mm
Reference Value = 26.2 V/m; Power Drift = -0.021 dB
Peak SAR (extrapolated) = 2.09 W/kg
SAR(1 g) = 1.04 mW/g; SAR(10 g) = 0.581 mW/g

Maximum value of SAR (measured) = 1.17 mW/g

PG-1910/Zoom Scan (7x7x7)/Cube 1: Measurement grid: dx=5mm, dy=5mm, dz=5mm
Reference Value = 26.2 V/m; Power Drift = -0.021 dB
Peak SAR (extrapolated) = 1.60 W/kg
SAR(1 g) = 0.935 mW/g; SAR(10 g) = 0.615 mW/g

Maximum value of SAR (measured) = 1.13 mW/g

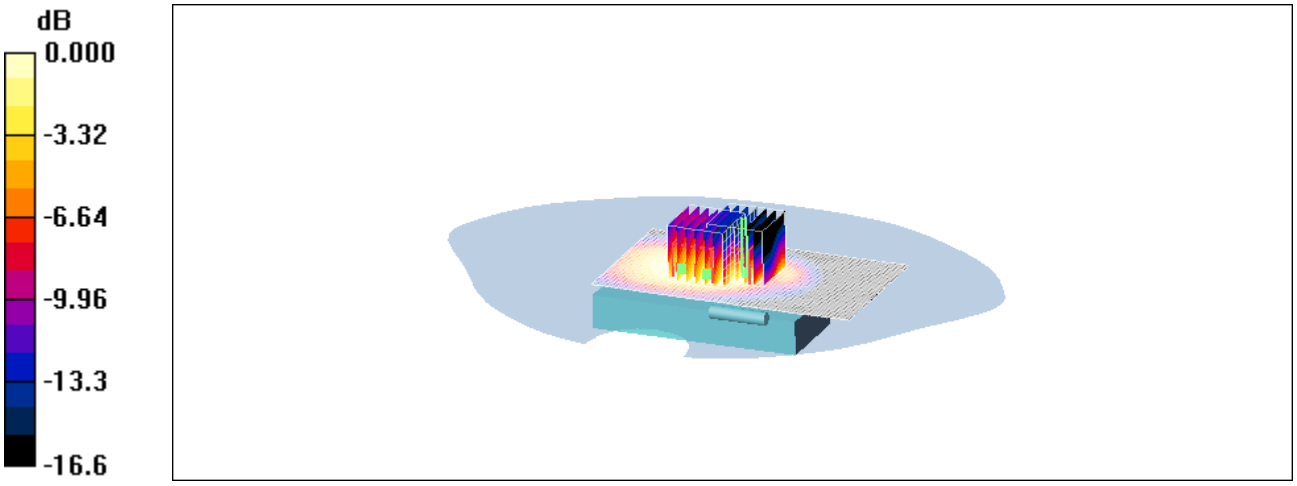

0 dB = 1.13mW/g

Date/Time: 5/3/2006 15:43:37

Test Laboratory: ELECTRONIC TECHNOLOGY SYSTEMS DR. GENZ GMBH

1900_flat_front_ch661_dist 5mm

DUT: Dual Band GSM 850 /PCS1900 (with WAP & GPRS); Type: ---; Serial: PG-1910

Communication System: GSM 1900; Frequency: 1880 MHz;Duty Cycle: 1:8.3
Medium: Muscle 1900 MHz Medium parameters used: f = 1880 MHz; σ = 1.55 mho/m; ε_r = 51.9; ρ = 1000 kg/m^3
Phantom section: Flat Section

DASY4 Configuration:

- Probe: ET3DV6 - SN1711; ConvF(4.31, 4.31, 4.31); Calibrated: 11/21/2005
- Sensor-Surface: 4mm (Mechanical And Optical Surface Detection)
- Electronics: DAE3 Sn522; Calibrated: 11/23/2005
- Phantom: SAM 12; Type: TP-1217; Serial: QD000P40CA
- Measurement SW: DASY4, V4.6 Build 23; Postprocessing SW: SEMCAD, V1.8 Build 160

PG-1910/Area Scan (81x141x1): Measurement grid: dx=10mm, dy=10mm
Maximum value of SAR (interpolated) = 0.468 mW/g

PG-1910/Zoom Scan (7x7x7)/Cube 0: Measurement grid: dx=5mm, dy=5mm, dz=5mm
Reference Value = 15.7 V/m; Power Drift = -0.015 dB
Peak SAR (extrapolated) = 0.631 W/kg
SAR(1 g) = 0.426 mW/g; SAR(10 g) = 0.274 mW/g
Maximum value of SAR (measured) = 0.458 mW/g

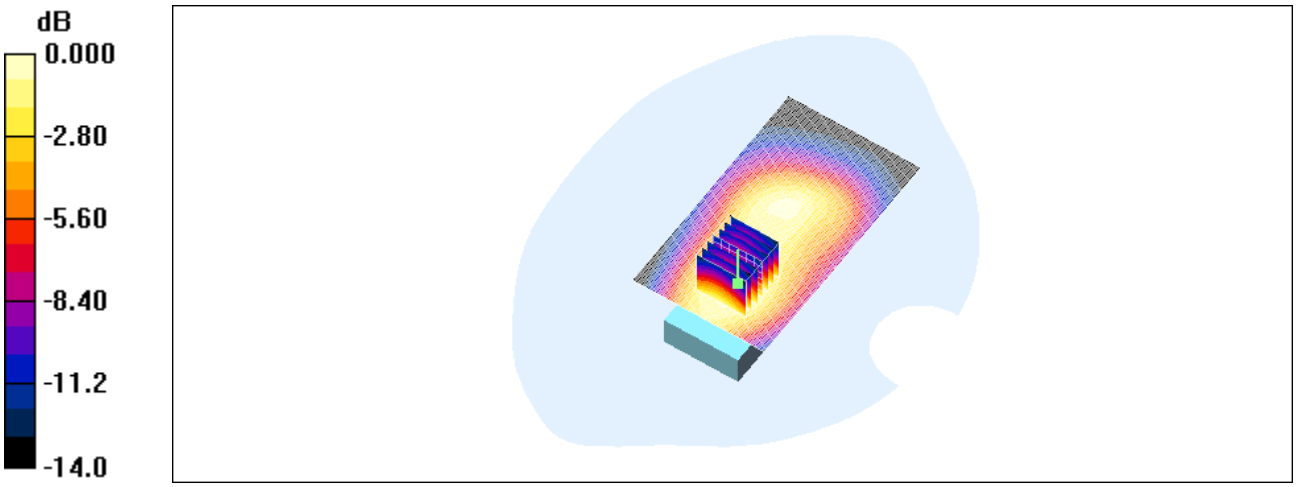

0 dB = 0.458mW/g

Date/Time: 5/3/2006 15:07:22

Test Laboratory: ELECTRONIC TECHNOLOGY SYSTEMS DR. GENZ GMBH

1900_flat_back_ch661_dist 5mm

DUT: Dual Band GSM 850 /PCS1900 (with WAP & GPRS); Type: ---; Serial: PG-1910

Communication System: GSM 1900; Frequency: 1880 MHz;Duty Cycle: 1:8.3
Medium: Muscle 1900 MHz Medium parameters used: f = 1880 MHz; σ = 1.55 mho/m; ε_r = 51.9; ρ = 1000 kg/m^3
Phantom section: Flat Section

DASY4 Configuration:

- Probe: ET3DV6 - SN1711; ConvF(4.31, 4.31, 4.31); Calibrated: 11/21/2005
- Sensor-Surface: 4mm (Mechanical And Optical Surface Detection)
- Electronics: DAE3 Sn522; Calibrated: 11/23/2005
- Phantom: SAM 12; Type: TP-1217; Serial: QD000P40CA
- Measurement SW: DASY4, V4.6 Build 23; Postprocessing SW: SEMCAD, V1.8 Build 160

PG-1910/Area Scan (81x141x1): Measurement grid: dx=10mm, dy=10mm
Maximum value of SAR (interpolated) = 1.26 mW/g

PG-1910/Zoom Scan (7x7x7)/Cube 0: Measurement grid: dx=5mm, dy=5mm, dz=5mm
Reference Value = 25.0 V/m; Power Drift = 0.039 dB
Peak SAR (extrapolated) = 2.20 W/kg
SAR(1 g) = 1.07 mW/g; SAR(10 g) = 0.579 mW/g

Maximum value of SAR (measured) = 1.22 mW/g

PG-1910/Zoom Scan (7x7x7)/Cube 1: Measurement grid: dx=5mm, dy=5mm, dz=5mm
Reference Value = 25.0 V/m; Power Drift = 0.039 dB
Peak SAR (extrapolated) = 1.45 W/kg
SAR(1 g) = 0.987 mW/g; SAR(10 g) = 0.651 mW/g
Maximum value of SAR (measured) = 1.06 mW/g

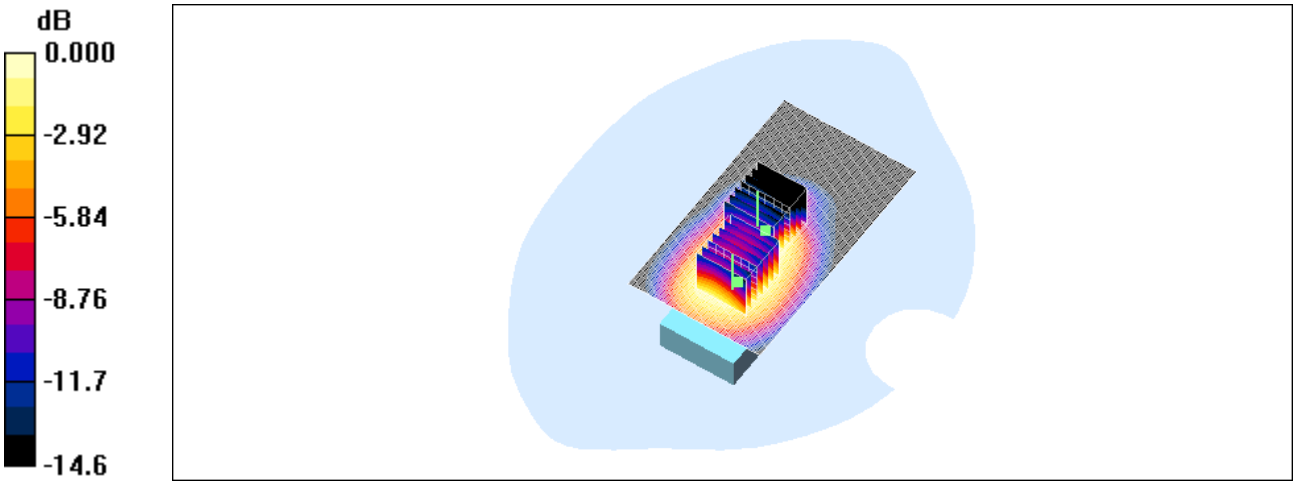

0 dB = 1.06mW/g

Date/Time: 5/3/2006 13:47:36

Test Laboratory: ELECTRONIC TECHNOLOGY SYSTEMS DR. GENZ GMBH

1900_flat_back_ch810_dist 5mm

DUT: Dual Band GSM 850 /PCS1900 (with WAP & GPRS); Type: ---; Serial: PG-1910

Communication System: GSM 1900; Frequency: 1909.8 MHz;Duty Cycle: 1:8.3
Medium: Muscle 1900 MHz Medium parameters used: f = 1909.8 MHz; σ = 1.59 mho/m; ε_r = 51.9; ρ = 1000 kg/m^3
Phantom section: Flat Section

DASY4 Configuration:

- Probe: ET3DV6 - SN1711; ConvF(4.31, 4.31, 4.31); Calibrated: 11/21/2005
- Sensor-Surface: 4mm (Mechanical And Optical Surface Detection)
- Electronics: DAE3 Sn522; Calibrated: 11/23/2005
- Phantom: SAM 12; Type: TP-1217; Serial: QD000P40CA
- Measurement SW: DASY4, V4.6 Build 23; Postprocessing SW: SEMCAD, V1.8 Build 160

PG-1910/Area Scan (81x141x1): Measurement grid: dx=10mm, dy=10mm
Maximum value of SAR (interpolated) = 1.29 mW/g

PG-1910/Zoom Scan (7x7x7)/Cube 0: Measurement grid: dx=5mm, dy=5mm, dz=5mm
Reference Value = 24.2 V/m; Power Drift = 0.015 dB
Peak SAR (extrapolated) = 2.37 W/kg
SAR(1 g) = 1.11 mW/g; SAR(10 g) = 0.585 mW/g

Maximum value of SAR (measured) = 1.24 mW/g

PG-1910/Zoom Scan (7x7x7)/Cube 1: Measurement grid: dx=5mm, dy=5mm, dz=5mm
Reference Value = 24.2 V/m; Power Drift = 0.015 dB
Peak SAR (extrapolated) = 1.41 W/kg
SAR(1 g) = 0.994 mW/g; SAR(10 g) = 0.649 mW/g
Maximum value of SAR (measured) = 1.07 mW/g

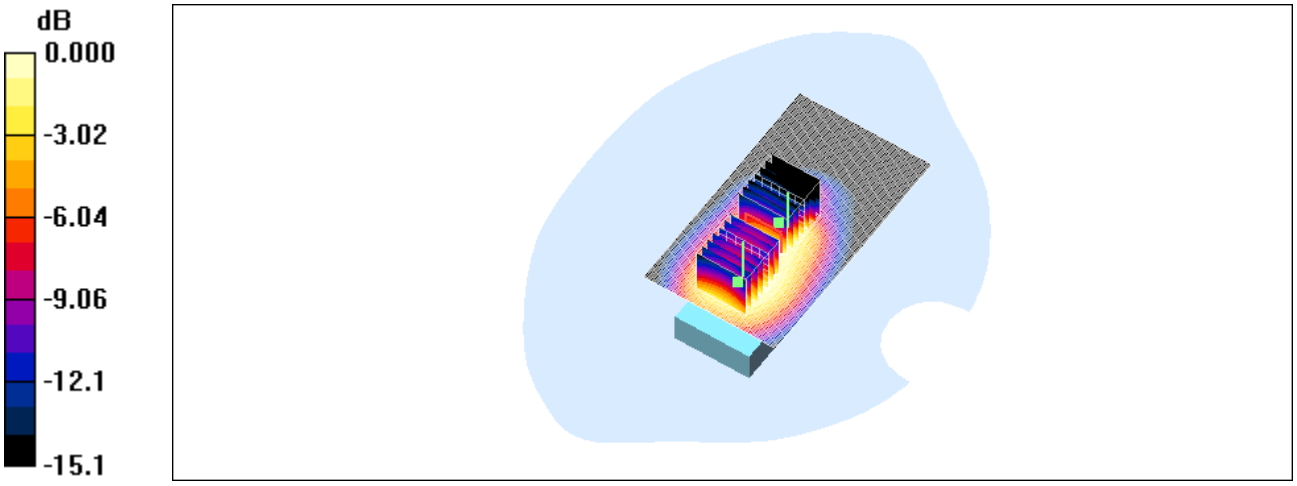

0 dB = 1.07mW/g

Date/Time: 5/10/2006 09:18:47

Test Laboratory: ELECTRONIC TECHNOLOGY SYSTEMS DR. GENZ GMBH

850_right_ch128_cheek

DUT: Dual Band GSM 850 / PCS1900 (with WAP & GPRS); Type: PG-1910; Serial: ---

Communication System: GSM 850; Frequency: 824.2 MHz;Duty Cycle: 1:8.3
Medium: Head 900 MHz Medium parameters used: f = 824.2 MHz; σ = 0.897 mho/m; ε_r = 43.7; ρ = 1000 kg/m^3
Phantom section: Right Section

DASY4 Configuration:

- Probe: ET3DV6 - SN1711; ConvF(5.99, 5.99, 5.99); Calibrated: 11/21/2005
- Sensor-Surface: 4mm (Mechanical And Optical Surface Detection)
- Electronics: DAE3 Sn522; Calibrated: 11/23/2005
- Phantom: SAM 12; Type: TP-1217; Serial: QD000P40CA
- Measurement SW: DASY4, V4.6 Build 23; Postprocessing SW: SEMCAD, V1.8 Build 160

PG-1910/Area Scan (91x141x1): Measurement grid: dx=10mm, dy=10mm
Maximum value of SAR (interpolated) = 0.772 mW/g

PG-1910/Zoom Scan (7x7x7)/Cube 0: Measurement grid: dx=5mm, dy=5mm, dz=5mm
Reference Value = 18.6 V/m; Power Drift = -0.070 dB
Peak SAR (extrapolated) = 1.18 W/kg
SAR(1 g) = 0.717 mW/g; SAR(10 g) = 0.443 mW/g
Maximum value of SAR (measured) = 0.773 mW/g

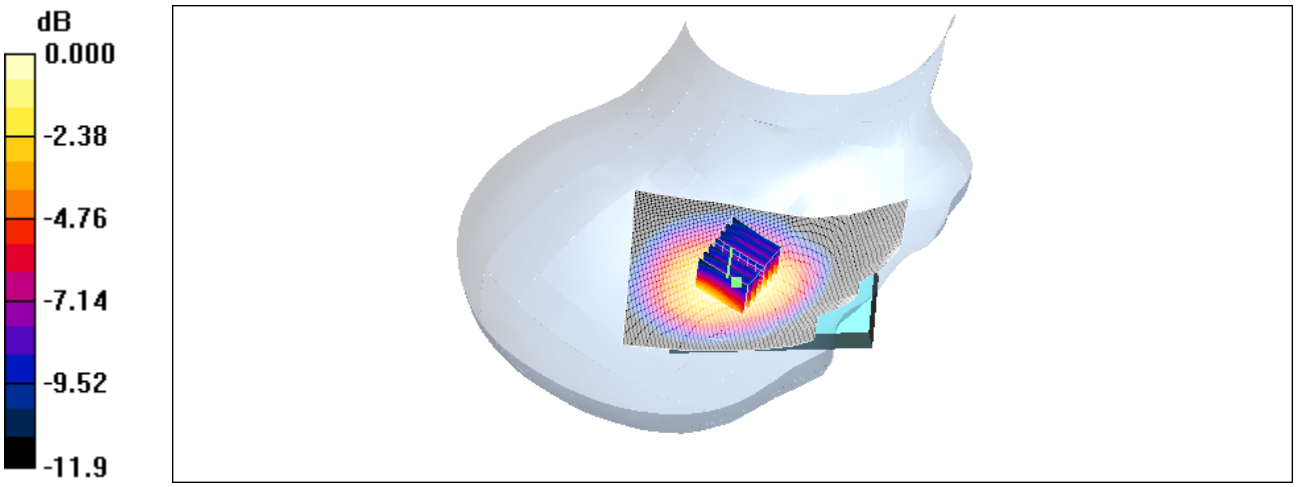

0 dB = 0.773mW/g

Date/Time: 5/10/2006 08:50:56

Test Laboratory: ELECTRONIC TECHNOLOGY SYSTEMS DR. GENZ GMBH

850_right_ch189_cheek

DUT: Dual Band GSM 850 / PCS1900 (with WAP & GPRS); Type: PG-1910; Serial: ---

Communication System: GSM 850; Frequency: 836.4 MHz;Duty Cycle: 1:8.3
Medium: Head 900 MHz Medium parameters used: f = 836.4 MHz; σ = 0.909 mho/m; ε_r = 43.6; ρ = 1000 kg/m^3
Phantom section: Right Section

DASY4 Configuration:

- Probe: ET3DV6 - SN1711; ConvF(5.99, 5.99, 5.99); Calibrated: 11/21/2005
- Sensor-Surface: 4mm (Mechanical And Optical Surface Detection)
- Electronics: DAE3 Sn522; Calibrated: 11/23/2005
- Phantom: SAM 12; Type: TP-1217; Serial: QD000P40CA
- Measurement SW: DASY4, V4.6 Build 23; Postprocessing SW: SEMCAD, V1.8 Build 160

PG-1910/Area Scan (91x141x1): Measurement grid: dx=10mm, dy=10mm
Maximum value of SAR (interpolated) = 1.14 mW/g

PG-1910/Zoom Scan (7x7x7)/Cube 0: Measurement grid: dx=5mm, dy=5mm, dz=5mm
Reference Value = 21.4 V/m; Power Drift = -0.018 dB
Peak SAR (extrapolated) = 1.65 W/kg
SAR(1 g) = 1.02 mW/g; SAR(10 g) = 0.628 mW/g
Maximum value of SAR (measured) = 1.10 mW/g

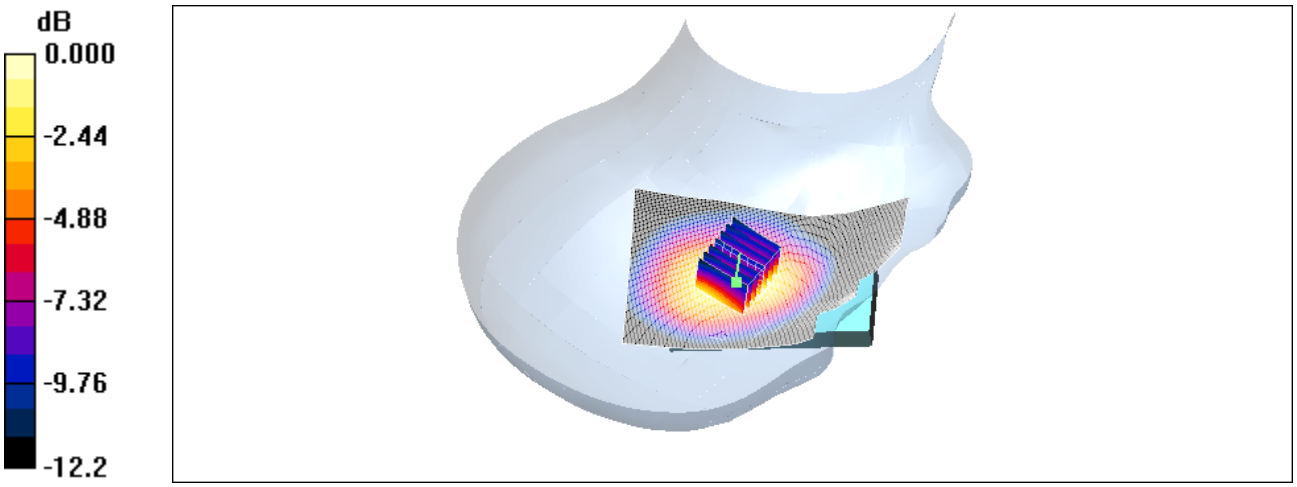

0 dB = 1.10mW/g