DTC550 Direct to Card Printer/Encoder User Guide (Rev. 1.0)

Part Number: L000683

DTC550 Direct to Card Printer/Encoder User Guide (Rev. 1.0), property of FARGO Electronics, Incorporated

Copyright © 2002, 2003, 2004, 2005, 2006 by FARGO Electronics, Incorporated. All rights reserved. Printed in the United States of America. Exclusive permission is granted to authorized resellers of FARGO products to reproduce and distribute this copyrighted document to authorized FARGO customers, who have signed a “no disclosure agreement” regarding the restricted, proprietary use of said document.

The revision number for this document will be updated to reflect changes, corrections, updates and enhancements to this document.

Revision Control Number	**Date**	**Document Title**
Revision 1.0	1 July 2005	DTC550 Direct to Card Printer/Encoder User Guide (Rev. 1.0)

These reference documents were thoroughly reviewed to provide FARGO with professional and international standards, requirements, guidelines and models for our technical, training and user documentation. At all times, the *Copyright Protection Notice* for each document was adhered to within our FARGO documentation process. This reference to other documents does not imply that FARGO is an ISO-certified company at this time.

ANSI/ISO/ASQ Q9001-2000 American National Standard, (sub-title) Quality Management Systems - Requirements (published by the American Society of Quality, Quality Press, P.O. Box 3005, Milwaukee, Wisconsin 53201-3005)

The ASQ ISO 9000:2000 Handbook (editors, Charles A. Cianfrani, Joseph J. Tsiakals and John E. West; Second Edition; published by the American Society of Quality, Quality Press, 600 N. Plankinton Avenue, Milwaukee, Wisconsin 53203)

Juran's Quality Handbook (editors, Joseph M. Juran and A. Blanton Godfrey; Fifth Edition, McGraw-Hill)

Any questions regarding changes, corrections, updates or enhancements to this document should be forwarded to:

FARGO Electronics, Incorporated
Support Services
6533 Flying Cloud Drive
Eden Prairie, MN 55344 (USA)
(952) 941-9470
(800) 459-5636
FAX: (952) 941-7836
www.fargo.com
E-mail: sales@fargo.com

Table of Contents

Section 1: Introduction ***1-1***
How to use the manual 1-1
DTC550 Direct to Card Printer/Encoder Overview 1-2
Reviewing the DTC550 Block Diagram 1-2
Reviewing DTC550 Sequence of Operations 1-3
Reviewing DTC550 Boot up Sequence 1-5
Reviewing the Lamination Module Sequence of Operations 1-6
Reviewing the Lamination Module Boot up Sequence 1-8

Section 2: Specifications ***2-1***
Regulatory Compliances 2-1
Agency Listings 2-2
FCC Rules 2-2
Safety Messages (review carefully) 2-3
Technical Specifications 2-4
Functional Specifications 2-11
Printer Components - Descriptions 2-13
Printer Components: LCD and Softkey Control Pad 2-21
Printer Components: Print Ribbons 2-26
Printer Components: Resin-Only Print Ribbons 2-27
Printer Components: Dye-Sublimation Print Ribbons 2-28
Printer Components: Dye-Sublimation/Resin Print Ribbons 2-29
Printer Components: Blank Cards 2-30
Printer Components: Upgraded 81754 PVC Cards 2-32
Printer Components: Card Input and Output Hoppers 2-34
Reviewing the Card Lamination Module 2-35
Reviewing the Lamination Top Cover and Station 2-37
Reviewing the Securing Latches and Lamination LED light 2-38
Reviewing the Cancel button 2-39
Reviewing the Resume (pause) button 2-40
Reviewing the Rejection Card Hopper and Card Output Hopper 2-41
Reviewing the Module and Printer interaction 2-42
Reviewing the Module and LCD display interaction 2-43
Reviewing the Module's Programmed Default Temperature 2-44
Reviewing the Laminator Temperature Adjustment 2-45
Reviewing the Overlaminates 2-46
Reviewing the Thermal Transfer Film and PolyGuard Overlaminates 2-46
Reviewing the CR-90 or CR-100 Patch Size 2-47
Reviewing the Overlaminate Design 2-47
Reviewing the Visual Security Solutions 2-48
VeriMarkTM Cards - 2-D holographic foil application 2-48
Custom HoloMarkTM Cards 2-48
Visual Security - Card Stock Part Numbers 2-48
Visual Security - Fargo Certified Overlaminates (Special Order in 50 quantity minimum) 2-48
Visual Security Card Stock - Tolerances 2-49
VeriMarkTM - Application Specifications 2-49
HoloMarkTM and Custom HoloMarkTM - Application Specifications 2-49

Section 3: Secure Print Security Suite ***3-49***
Overview 3-49
Print Notification Application 3-2
Security Imaging Application 3-2
Print Diagnostics Application 3-2
Supplies e-Ordering Application 3-2

Password Control Application 3-2
Print Security Suite – Main Window 3-3
SecureMark Media 3-3

Section 4: Setup and Installation Procedures *Error! Bookmark not defined.*
Table of Contents **Error! Bookmark not defined.**
Printer Setup and Installation **Error! Bookmark not defined.**
Choosing a Good Location **Error! Bookmark not defined.**
About Moisture Condensation **Error! Bookmark not defined.**
Unpacking and Inspection **Error! Bookmark not defined.**
Safety Messages (review carefully) **Error! Bookmark not defined.**
Introduction **Error! Bookmark not defined.**
Time Requirement **Error! Bookmark not defined.**
System Requirements **Error! Bookmark not defined.**
Inspection **Error! Bookmark not defined.**
Unpacking the Printer **Error! Bookmark not defined.**
Loading Supplies **Error! Bookmark not defined.**
Loading the Print Ribbon **Error! Bookmark not defined.**
Inserting the Card Cleaning Cartridge **Error! Bookmark not defined.**
Loading the Overlaminate **Error! Bookmark not defined.**
Connecting power to the DTC550 Printer **Error! Bookmark not defined.**
Loading the Blank Cards **Error! Bookmark not defined.**
Printer Driver Installation Procedure **Error! Bookmark not defined.**
Installing the DTC550 Printer Driver **Error! Bookmark not defined.**
Installing the SecureMark Application **Error! Bookmark not defined.**
Printing a Test Print Image **Error! Bookmark not defined.**
Printer Transport **Error! Bookmark not defined.**
Moving the Printer to another location **Error! Bookmark not defined.**

Section 5: General Troubleshooting *Error! Bookmark not defined.*
Reviewing the LCD display and LED light **Error! Bookmark not defined.**
Safety Messages (review carefully) **Error! Bookmark not defined.**
Troubleshooting the LCD Messages **Error! Bookmark not defined.**
Verifying the Encoding Settings for DTC550 Series Card Printer and Encoders **Error! Bookmark not defined.**
Communications Errors **Error! Bookmark not defined.**
Resolving the Communication Errors **Error! Bookmark not defined.**
Card Feeding Errors **Error! Bookmark not defined.**
Resolving the Card Feeding Errors **Error! Bookmark not defined.**
Resolving the Card Jam on the Flipper Table **Error! Bookmark not defined.**
Resolving the Card Hopper Jam Error Message **Error! Bookmark not defined.**
Resolving the Card Hopper Empty Error Message **Error! Bookmark not defined.**
Encoding Errors **Error! Bookmark not defined.**
Resolving the No Magnetic Encoder Error Message **Error! Bookmark not defined.**
Resolving the No ENC Response Error Message **Error! Bookmark not defined.**
Resolving the Failed Magnetic Encoder Error Message **Error! Bookmark not defined.**
Resolving the No Prox Encoder Error Message **Error! Bookmark not defined.**
Resolving the No Smart Encoder Error Message **Error! Bookmark not defined.**
Resolving the Failed Smart Encode Error Message **Error! Bookmark not defined.**
Removing the Card Jam in the Printer's Magnetic Encoding Area **Error! Bookmark not defined.**
Removing the Card Jam in the Printer's Smart Card Encoding Area **Error! Bookmark not defined.**
Resolving the Printer not reading Encoded Magnetic Track Data **Error! Bookmark not defined.**
Resolving the Magnetic Stripe Data being printed on a Card problem **Error! Bookmark not defined.**
Printing Process Errors **Error! Bookmark not defined.**
Resolving the Ribbon Alignment Error Message **Error! Bookmark not defined.**
Resolving the Print Ribbon Error Message **Error! Bookmark not defined.**

Resolving the Print Ribbon Out Error Message _____ **Error! Bookmark not defined.**
Resolving the Ribbon Jam/Broken Error Message _____ **Error! Bookmark not defined.**
Resolving the Wrong Print Ribbon Error Message _____ **Error! Bookmark not defined.**
Resolving the Unknown Ribbon Type Error Message _____ **Error! Bookmark not defined.**
Resolving the Headlift Error Message _____ **Error! Bookmark not defined.**
Resolving the Printer pausing between panels error _____ **Error! Bookmark not defined.**
Resolving the Printhead Temp Error Message _____ **Error! Bookmark not defined.**
Resolving the Flipper Alignment Error Message _____ **Error! Bookmark not defined.**
Firmware Errors _____ **Error! Bookmark not defined.**
Resolving the Update Firmware Now _____ **Error! Bookmark not defined.**
Resolving an Upgrade Failed error _____ **Error! Bookmark not defined.**
Resolving a Program Exception Error _____ **Error! Bookmark not defined.**
Diagnosing the Image Problems _____ **Error! Bookmark not defined.**
Resolving the Pixel failure problems _____ **Error! Bookmark not defined.**
Resolving the Card surface debris problems _____ **Error! Bookmark not defined.**
Resolving the incorrect Image Darkness problems _____ **Error! Bookmark not defined.**
Resolving the Ribbon wrinkle problems _____ **Error! Bookmark not defined.**
Resolving the excessive Resin Printing problems _____ **Error! Bookmark not defined.**
Resolving the incomplete Resin Printing problems _____ **Error! Bookmark not defined.**
Resolving the cut off or off-center Card Image problems _____ **Error! Bookmark not defined.**
Resolving the poor Image Quality problems _____ **Error! Bookmark not defined.**
Printing a Test Image _____ **Error! Bookmark not defined.**
Reviewing the Gray/Align YMC/K Self-Test _____ **Error! Bookmark not defined.**
Reviewing the Color/Resin YMCK Self-Test _____ **Error! Bookmark not defined.**
Reviewing the Color Bars YMC Self-Test _____ **Error! Bookmark not defined.**
Reviewing the Card Count Self-Test _____ **Error! Bookmark not defined.**
Reviewing the Magnetic Test option _____ **Error! Bookmark not defined.**

Section 6: Card Lamination Module _____ *Error! Bookmark not defined.*
Safety Messages (review carefully) _____ **Error! Bookmark not defined.**
Loading the Overlaminate _____ **Error! Bookmark not defined.**
Adjusting the Card Lamination Module _____ **Error! Bookmark not defined.**
Adjusting the Card Flattener _____ **Error! Bookmark not defined.**
Adjusting the Card Guide Rail _____ **Error! Bookmark not defined.**
Adjusting the Internal Card Guide _____ **Error! Bookmark not defined.**
Attaching the Card Lamination Module _____ **Error! Bookmark not defined.**

Section 7: Printer Adjustments _____ *Error! Bookmark not defined.*
Safety Messages (review carefully) _____ **Error! Bookmark not defined.**
Adjusting the Internal Card Guide _____ **Error! Bookmark not defined.**
Printer Driver options _____ **Error! Bookmark not defined.**
Using the Card tab _____ **Error! Bookmark not defined.**
Selecting the Card Size _____ **Error! Bookmark not defined.**
Using the Card Hopper Selection option _____ **Error! Bookmark not defined.**
Adjusting the Orientation Option _____ **Error! Bookmark not defined.**
Selecting the number of Copies _____ **Error! Bookmark not defined.**
Using the Diagnostics button under the Card tab _____ **Error! Bookmark not defined.**
Using the Clean Printer Option _____ **Error! Bookmark not defined.**
Using the Test Print button _____ **Error! Bookmark not defined.**
Using the About button _____ **Error! Bookmark not defined.**
Using the Device Options tab _____ **Error! Bookmark not defined.**
Adjusting for the Ribbon Type option _____ **Error! Bookmark not defined.**
Selecting the Auto Ribbon Select option _____ **Error! Bookmark not defined.**
Adjusting for the Color matching _____ **Error! Bookmark not defined.**
Adjusting for the Resin Dither _____ **Error! Bookmark not defined.**
Using the Print Both Sides option _____ **Error! Bookmark not defined.**

Using the Split 1 Set of Ribbon Panels option **Error! Bookmark not defined.**
Using the Print Back Side First option **Error! Bookmark not defined.**
Using the Print on Back Side Only option **Error! Bookmark not defined.**
Using the Rotate Front by 180 Degrees option **Error! Bookmark not defined.**
Using the Rotate Back by 180 Degrees option **Error! Bookmark not defined.**
Using the Disable Printing option **Error! Bookmark not defined.**
Using the Image Color tab **Error! Bookmark not defined.**
Using the Resin Heat (K) option (Front and Back) **Error! Bookmark not defined.**
Using the Overlay Heat (O) option **Error! Bookmark not defined.**
Using the Image Color option and Default button **Error! Bookmark not defined.**
Using the Calibrate tab **Error! Bookmark not defined.**
Using the Image Position Controls **Error! Bookmark not defined.**
Using the Sensors button **Error! Bookmark not defined.**
Using the Settings button **Error! Bookmark not defined.**
Using the Printer Calibration Utility **Error! Bookmark not defined.**
Using the Image Darkness Option **Error! Bookmark not defined.**
Using the Print Top of Form Option **Error! Bookmark not defined.**
Using the Print End of Form Option **Error! Bookmark not defined.**
Using the Print Left of Form Option **Error! Bookmark not defined.**
Using the Mag Top of Form Option **Error! Bookmark not defined.**
Using the Ribbon Tension Option **Error! Bookmark not defined.**
Using the Magnetic Encoding tab **Error! Bookmark not defined.**
Encoding the Coercivity and Magnetic Track Selection **Error! Bookmark not defined.**
Using the Magnetic Track Selection option **Error! Bookmark not defined.**
Reviewing the Enable MLE Support checkbox **Error! Bookmark not defined.**
Using the Magnetic Track Options **Error! Bookmark not defined.**
Using the Bit Density radio buttons **Error! Bookmark not defined.**
Using the Character Size radio buttons **Error! Bookmark not defined.**
Using the ASCII Offset **Error! Bookmark not defined.**
Using the LRC Generation radio buttons **Error! Bookmark not defined.**
Using the Character Parity radio buttons **Error! Bookmark not defined.**
Reviewing the Shift Data Left **Error! Bookmark not defined.**
Reviewing the ISO Track Locations **Error! Bookmark not defined.**
Reviewing the Sample String **Error! Bookmark not defined.**
Sending the Track Information **Error! Bookmark not defined.**
Reviewing the ASCII Code and Character Table **Error! Bookmark not defined.**
Using the Lamination tab (only with Card Lamination Module) **Error! Bookmark not defined.**
Selecting the Lamination Position **Error! Bookmark not defined.**
Selecting the Lamination Side **Error! Bookmark not defined.**
Selecting the Lamination Type **Error! Bookmark not defined.**
Selecting the Lamination Type **Error! Bookmark not defined.**
Adjusting the Transfer Dwell Time and Transfer Temperature **Error! Bookmark not defined.**
Selecting the Sensors button and Defaults button **Error! Bookmark not defined.**
Using the Overlay/Print Area tab **Error! Bookmark not defined.**
Using the Overlay/Print Area dropdown menu **Error! Bookmark not defined.**
Using the Overlay/Print Area **Error! Bookmark not defined.**
Using Security Options (Visual Security Solutions) **Error! Bookmark not defined.**
Selecting Orientation - Landscape under Card tab **Error! Bookmark not defined.**
Selecting the Visual Security Solutions dropdown menu (A to D) **Error! Bookmark not defined.**
Selecting Orientation - Portfolio under Card tab **Error! Bookmark not defined.**
Selecting the Visual Security Solutions dropdown menu (E to H) **Error! Bookmark not defined.**
Selecting the VeriMark radio button **Error! Bookmark not defined.**
Selecting the HoloMark radio button **Error! Bookmark not defined.**
Reviewing the Custom VeriMark Card **Error! Bookmark not defined.**
Reviewing the Custom HoloMark Card **Error! Bookmark not defined.**
Using the K Panel Resin tab **Error! Bookmark not defined.**

Selecting the Full Card with the K Panel Resin tab _____ **Error! Bookmark not defined.**
Selecting the Defined Area(s) with the K Panel Resin tab _____ **Error! Bookmark not defined.**
Selecting the Undefined Area(s) with the K Panel Resin tab _____ **Error! Bookmark not defined.**
Defining the Area to activate the Card Grid _____ **Error! Bookmark not defined.**
Measuring the Total Card area _____ **Error! Bookmark not defined.**
Defining the positioning of the area on the Card _____ **Error! Bookmark not defined.**
Selecting the Print YMC under the K and Print K Only options _____ **Error! Bookmark not defined.**
Using the Printer Supplies tab _____ **Error! Bookmark not defined.**
Reviewing the Ribbon Information _____ **Error! Bookmark not defined.**
Reviewing the Ribbon Level Indicator _____ **Error! Bookmark not defined.**

Section 8: Cleaning _____ *Error! Bookmark not defined.*
Safety Messages (review carefully) _____ **Error! Bookmark not defined.**
Introduction _____ **Error! Bookmark not defined.**
Supplies Included _____ **Error! Bookmark not defined.**
Cleaning the Printhead (D855055) _____ **Error! Bookmark not defined.**
Replacing the Card Cleaning Roller _____ **Error! Bookmark not defined.**
Cleaning the Platen and Card Feed Rollers _____ **Error! Bookmark not defined.**
Cleaning the Platen _____ **Error! Bookmark not defined.**
Cleaning the Printer's Exterior _____ **Error! Bookmark not defined.**
Cleaning the Printer's Interior _____ **Error! Bookmark not defined.**

Section 9: Diagnostic Tool Utility _____ *Error! Bookmark not defined.*
Table of Contents _____ **Error! Bookmark not defined.**
Using the Diagnostic Utility tabs _____ **Error! Bookmark not defined.**
Selecting the Print Spooler tab in the Diagnostics Utility _____ **Error! Bookmark not defined.**
Selecting the Firmware Updates tab in the Diagnostics Utility _____ **Error! Bookmark not defined.**
Downloading Firmware Updates _____ **Error! Bookmark not defined.**
Selecting the Firmware File _____ **Error! Bookmark not defined.**
Placing the Printer in Upgrade Mode _____ **Error! Bookmark not defined.**
Sending the Firmware File _____ **Error! Bookmark not defined.**
Selecting the Mechanics tab in the Diagnostics Utility _____ **Error! Bookmark not defined.**
Selecting the Move the Flipper Table to Mag Position button _____ **Error! Bookmark not defined.**
Selecting the Move Flipper Table to Home Position button _____ **Error! Bookmark not defined.**
Selecting the Toggle the Card Hopper Position button _____ **Error! Bookmark not defined.**
Selecting the Raise the Printhead button _____ **Error! Bookmark not defined.**
Selecting the Lower the Printhead button _____ **Error! Bookmark not defined.**
Selecting the Calibrate the Ribbon Sensor button _____ **Error! Bookmark not defined.**
Selecting the Self Tests tab in the Diagnostics Utility _____ **Error! Bookmark not defined.**
Selecting the Barcode Test Card button _____ **Error! Bookmark not defined.**
Selecting the YMCK Test Card Self Test button _____ **Error! Bookmark not defined.**
Selecting the Magnetic Self Test button _____ **Error! Bookmark not defined.**
Selecting the Color Bar Self Test button _____ **Error! Bookmark not defined.**
Selecting the Alignment Self Test button _____ **Error! Bookmark not defined.**
Selecting the Alignment Self Test button _____ **Error! Bookmark not defined.**
Selecting the Card Samples tab in the Diagnostics Utility _____ **Error! Bookmark not defined.**
Selecting the Magnetic Encoding tab in the Diagnostics Utility _____ **Error! Bookmark not defined.**
Selecting the Help button in the Diagnostics Utility _____ **Error! Bookmark not defined.**
Selecting the About button in the Diagnostics Utility _____ **Error! Bookmark not defined.**
Selecting the Exit button in the Diagnostics Utility _____ **Error! Bookmark not defined.**
Using the Track 1, Track 2 and Track 3 text boxes _____ **Error! Bookmark not defined.**
Selecting the Auto Fill Track data button _____ **Error! Bookmark not defined.**
Selecting the Encode button _____ **Error! Bookmark not defined.**
Selecting the Clear button _____ **Error! Bookmark not defined.**
Reviewing the ISO Track Locations _____ **Error! Bookmark not defined.**
Sending the Track Information _____ **Error! Bookmark not defined.**

Reviewing the Sample String _____ **Error! Bookmark not defined.**
Reviewing the ASCII Code and Character Table _____ **Error! Bookmark not defined.**

Section 10: Packing the DTC550 Card Printer _____ *Error! Bookmark not defined.*

Section 11: Board Level Diagnostics _____ *Error! Bookmark not defined.*
Board Errors _____ **Error! Bookmark not defined.**
Resolving the EE Memory Error _____ **Error! Bookmark not defined.**
Resolving the EE Checksum Error _____ **Error! Bookmark not defined.**
Resolving the SDRAM Memory Error _____ **Error! Bookmark not defined.**
Resolving the FPGA Error _____ **Error! Bookmark not defined.**
Sensor Testing _____ **Error! Bookmark not defined.**
Reviewing the Sensor Location and Voltages _____ **Error! Bookmark not defined.**
Reviewing the DTC550 EE Settings _____ **Error! Bookmark not defined.**

Section 12: LCD On-Line Menu Navigation _____ *Error! Bookmark not defined.*
Entering the LCD Menu and selecting an Option _____ **Error! Bookmark not defined.**
Using the Softkey and Scroll buttons _____ **Error! Bookmark not defined.**
Accessing the Menu Option Structure Tree _____ **Error! Bookmark not defined.**
Selecting from the Menu Option Structure Tree _____ **Error! Bookmark not defined.**
Using the LCD Menu _____ **Error! Bookmark not defined.**
Printing the Self-test _____ **Error! Bookmark not defined.**
Reviewing the Gray/Align YMC and Gray/Align YMC/K Self-Test ___ **Error! Bookmark not defined.**
Reviewing the Color/Resin YMCK Self-Test _____ **Error! Bookmark not defined.**
Reviewing the Card Count YMC Self-Test _____ **Error! Bookmark not defined.**
Reviewing the Standard Resin Self-Test _____ **Error! Bookmark not defined.**
Using the Magnetic Test option (only with Magnetic Encoding Module) _____ **Error! Bookmark not defined.**
Setting up the Printer _____ **Error! Bookmark not defined.**
Print TOF and Print EOF Alignment Procedures _____ **Error! Bookmark not defined.**
Preparing to Adjust the Print TOF and Print EOF _____ **Error! Bookmark not defined.**
Setting the Print TOF _____ **Error! Bookmark not defined.**
Setting the Print EOF _____ **Error! Bookmark not defined.**
Adjusting the Ribbon Tension _____ **Error! Bookmark not defined.**
Setting the Printhead Resistance _____ **Error! Bookmark not defined.**
Adjusting the Image Darkness _____ **Error! Bookmark not defined.**
Changing the Encoder Settings _____ **Error! Bookmark not defined.**
Adjusting the Magnetic TOF _____ **Error! Bookmark not defined.**
Changing the Hopper Settings _____ **Error! Bookmark not defined.**
Changing the BAUD Rate Settings _____ **Error! Bookmark not defined.**
Adjusting the Flipper Offset _____ **Error! Bookmark not defined.**
Viewing the Report Supplies _____ **Error! Bookmark not defined.**
Using the Show the Error Count Tool _____ **Error! Bookmark not defined.**
Showing the Card Count _____ **Error! Bookmark not defined.**
Selecting the System Upgrade (Firmware Upgrade) _____ **Error! Bookmark not defined.**

Section 13: Firmware Updates _____ *Error! Bookmark not defined.*
Firmware Updater Application Program _____ **Error! Bookmark not defined.**
Downloading Firmware Updates _____ **Error! Bookmark not defined.**
Selecting the Firmware File _____ **Error! Bookmark not defined.**
Placing the Printer in Upgrade Mode _____ **Error! Bookmark not defined.**
Sending the Firmware File _____ **Error! Bookmark not defined.**
Updating the Printer's Firmware _____ **Error! Bookmark not defined.**
Updating the Main Firmware _____ **Error! Bookmark not defined.**
Updating the LCD Firmware _____ **Error! Bookmark not defined.**

Section 14: Fargo Technical Support _____ *Error! Bookmark not defined.*

Contacting Fargo Technical Support_____ **Error! Bookmark not defined.**
Reading the Serial Numbers on a Fargo Printer _____ **Error! Bookmark not defined.**
Finding out when a Fargo Card Printer was manufactured _____ **Error! Bookmark not defined.**
Reviewing Example No. 1: Serial Number 80453289_____ **Error! Bookmark not defined.**
Reviewing Example No. 2: Serial Number A1280224 _____ **Error! Bookmark not defined.**

Section 15: Reviewing Spare Parts Lists _____*Error! Bookmark not defined.*
Reviewing the Spare Parts List for DTC 500 Series Card Printer _____ **Error! Bookmark not defined.**
Reviewing the Spare Parts List for the DTC550 LAM_____ **Error! Bookmark not defined.**

Section 16: Glossary of Terms _____*Error! Bookmark not defined.*

Section 17: Index_____*Error! Bookmark not defined.*

Section 1: Introduction

How to use the manual

The DTC550 Direct to Card Printer/Encoder User Guide (Rev. 1.0) is designed to provide Installers and Technicians with quick, efficient lookup of related procedures, components and terms. The manual can be used effectively either in soft or hard copy, depending on the preference of the Installer or Technician.

Manual	**Description**
Sequence of Operations, Glossary of Terms and Technical/Functional Specifications (hyper-linked)	You can go directly to the Sequence of Operations, Glossary of Terms, Technical Specifications and Functional Specifications to learn how to use the processes, procedures, functions and windows for the DTC550 Direct to Card Printer/Encoder within concise, correlative tables.
Table of Contents (hyper-linked)	You can use the automated Table of Contents to quickly locate, for example, an error message, a procedure, the index or an appendix.
Troubleshooting, Replacement, Removal, Diagnostic and Navigation Procedures (in hyper-linked Sections)	You can go directly to Specifications, General Troubleshooting, Printer Adjustments, Parts Replacement, Printer Packing, Board Level Diagnostics, LCD On-Line Menu Navigation and Firmware Updates to find troubleshooting, removal and replacement procedures. The section titles are always labeled according to their function for consistent usage.
Cross-Referencing (hyper-linked)	You can use the cross-referencing links to quickly locate, for example, an error message or a procedure.
Comprehensive Index (hyper-linked)	You can use the Comprehensive Index to quickly locate information on the DTC550 Direct to Card Printer/Encoder, relating to a specification, a procedural step, a window or screen, a component, a term, a qualifier or a related feature to this Printer.
Appendices	You can use Appendix A and B to locate information relating to engineering drawings and technical updates, which are specific to the DTC550 Direct to Card Printer/Encoder.

DTC550 Direct to Card Printer/Encoder Overview

Reviewing the DTC550 Block Diagram

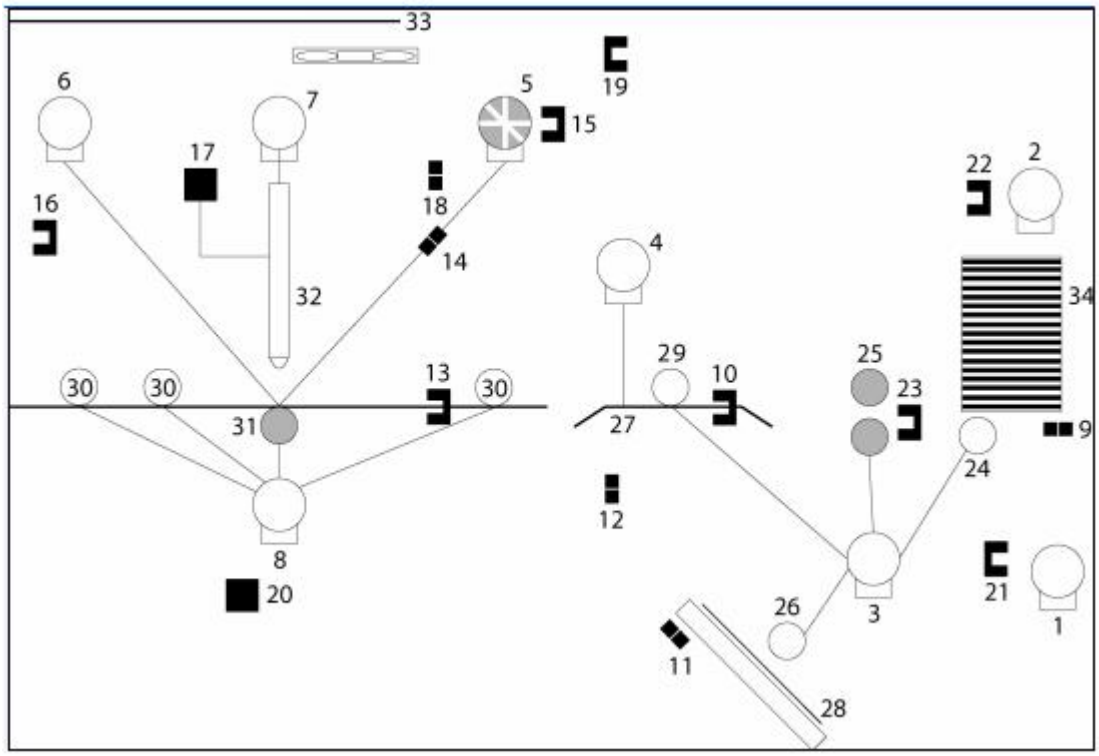

Motors		Sensors		Parts	
1	Hopper Lift	9	Card Detection	24	Card Input Roller
2	Hopper Transport	10	Flipper Table Card	25	Cleaning Cartridge
3	Encoding/Flipper Feed	11	Encoding TOF	26	Flipper Table Roller
4	Flipper Stepper	12	Flipper Home	27	Flipper Table
5	Ribbon Supply	13	Print TOF	28	Encoding Module
6	Ribbon Take-up	14	Ribbon Sensor	29	Encoding Feed Roller
7	Headlift	15	Ribbon Encoder	30	Card Feed Roller
8	Card Feed Stepper	20	Print Headlift	31	Platen Roller
		17	Thermistor	32	Printhead
		19	Cover Interlock	33	Printhead Cooling Fan
		16	Release Lever	34	Card Input Hopper
		18	RFID		
		22	Hopper Lift		
		21	Hopper Transport		
		23	Card Feed		

Reviewing DTC550 Sequence of Operations

The following sequence describes a DTC550 doing a dual sided full color print job with magnetic encoding.

Step	Process
1	The File information is received from the PC.
2	The Flipper Stepper activates and rotates the Flipper Table until the Flipper Home Sensor is activated.
3	The Flipper Stepper rotates the Flipper Table back a specific number of steps (based on the Flipper Offset setting) to return the Flipper Table to a level position.
4	The Card Detection Sensor detects the presence of a Card in the exception feed.
5	The Hopper Lift Motor activates and lowers the Card Hopper until the Hopper Lift Sensor detects a change in state.
6	The Card Detection Sensor detects the presence of a Card. If no card is seen, the following takes place: a. The Hopper Lift Motor activates and raises the Card Hopper until the Hopper Lift Sensor detects a change in state. b. The Hopper Transport Motor activates and moves to the other Hopper until the Hopper Position Sensor detects a change in state. c. The Hopper Lift Motor activates and lowers the card Hopper until the Hopper Lift Sensor is activated. d. The Card Detection Sensor detects the presence of a Card.
7	The Card Feed Stepper activates and feeds a card through the Cleaning Roller and onto the Flipper Table.
8	The Flipper Stepper rotates the Flipper Table a certain number of steps (based on the Encoder Angle setting) to position the card for Encoding.
9	The Encoder/Flipper Feed Motor activates until the Card passes the Encoding TOF Sensor.
10	The Encoding Feed Motor feeds the Card back to the Flipper Table while the Magnetic Encoding Head transfers data onto the Magnetic Stripe.
11	Repeat Steps 9 to 10 for each Encoding and Verification pass.

Continued on the next page

Reviewing DTC550 Sequence of Operations (continued)

Step	Process
12	The Card is centered on the Flipper Table based on input from the Flipper Table Card Sensor.
13	The Flipper Stepper rotates the Flipper Table a specific number of steps (based on the Flipper Offset setting) to the Home the Flipper Table.
14	The Card Feed Motor feeds the Card to the Print TOF Sensor.
15	The Ribbon Drives turn ON and move. All Stop. (**Note:** The Print Ribbon Encoder is active during this step.)
16	The Headlift Motor engages and moves the printhead down until the Headlift Sensor is activated. All Stop.
17	The Fan turns ON (as required) and blows cool air over the Printhead. (**Note:** The Printhead Thermistor determinates the Printhead Temperature.)
18	Ribbon Drive and Card feed Motors activate and the printhead burns image data until the image data is depleted. All Stop. (**Note:** The Ribbon Encoder is active during this step.)
19	The Headlift Motor engages, moving the printhead up until the Headlift Sensor is activated. All Stop.
20	The Card Feed Motor feeds the Card back to the Print TOF Sensor.
21	Repeat steps 14 to 20 for the appropriate Number of Color/Overlay Panels.
22	The Card Feed Motor transports the Card back to the Flipper Table.
23	The Flipper Stepper rotates in order to invert the Card.
24	The Card Feed Motor activates and moves the card to the Print TOF Sensor. All Stop.
25	The Flipper Stepper rotates to return the Flipper Table to a level position.
26	Repeat Steps 14 to 20 for the appropriate Number of Color/Overlay Panels.
27	The Card Feed Motor activates to feed the Card out of the Printer.

Continued on the next page

Reviewing DTC550 Boot up Sequence

Step	Process
1	The Printer checks the installed memory in the Printer.
2	The Printers Firmware is initialized.
3	The Headlift Motor activates and cycles the Printhead one full rotation.
4	The Encoding Feed Motor activates and the Magnetic TOF Sensor checks for the presence of a Card.
5	The Hopper Transport Motor activates until the Hopper Position Sensor detects a change in state.
6	The Hopper Lift Motor activates and raises the Hopper until the Hopper Lift Sensor detects a change in state.
7	The Card Feed Motor activates to clear any Cards from the Card path.

Reviewing the Lamination Module Sequence of Operations

The LAM sequence of operations begins after printing has occurred with the Card Printer.

Step	Process
1	The card is fed onto the Lamination Module Flipper Table.
2	The card is fed to the Card Position Sensor.
3	The Lamination Ribbon Motor begins cycling until the Upper Lamination Sensor detects the mark.
4	The Card Feed Motor activates to center the card on the Platen Roller.
5	The Lamination Roller Lift Motor cycles until the Lamination Roller Lift Sensor detects state change.

Continued on the next page

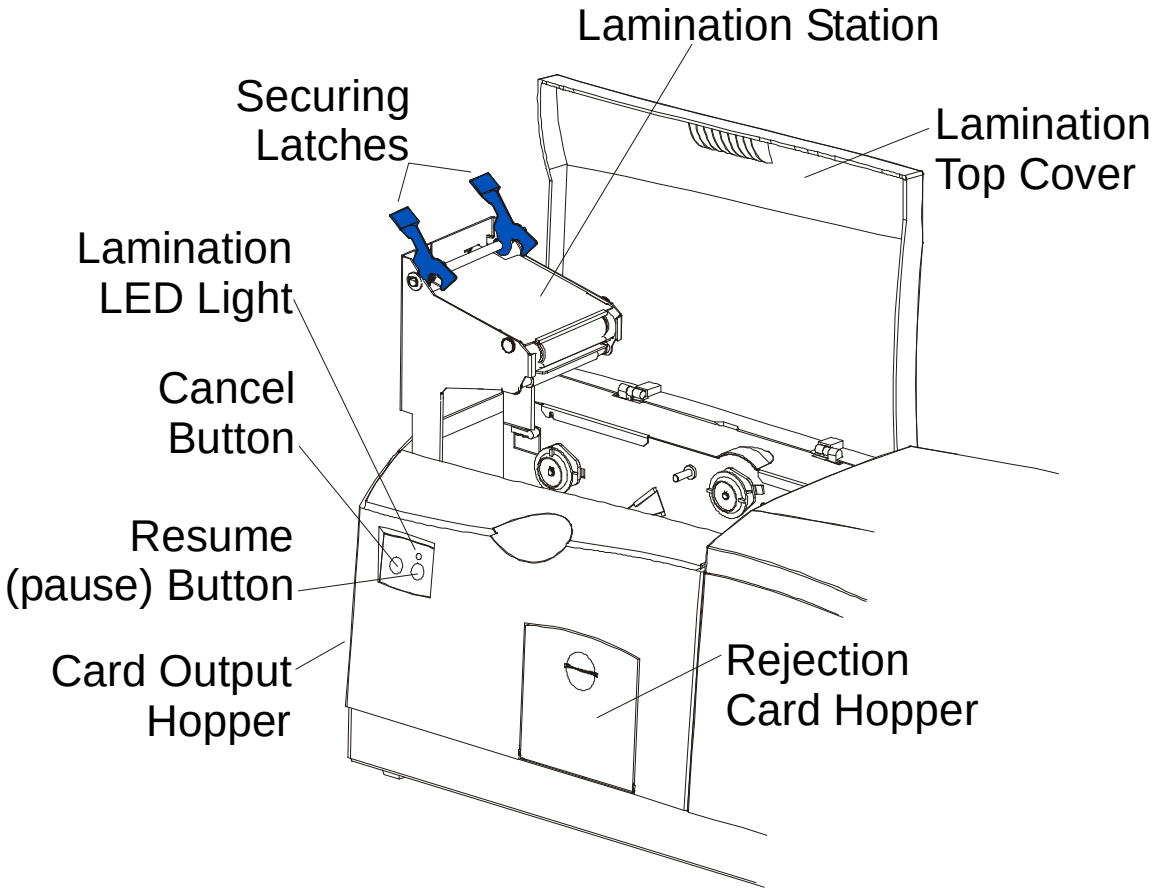

Reviewing the Lamination Module Sequence of Operations (continued)

Step	Process
6	The Card Feed Motor and the Lamination Ribbon Motor activate for the length of the card.
7	The Lamination Roller Lift Motor cycles until Lamination Roller Lift Sensor detects state change.
8	The card is fed back to the Flipper Table.
9	The Flipper Table Clutch engages.
10	The Flipper Table Motor activates until the Card is inverted based on the Flipper offset setting.
11	The Flipper Table Clutch disengages.
12	The card is fed off the Flipper Table.
13	The Flipper Table Clutch engages.
14	The Flipper Table Motor activates until the Flipper Table is homed.
15	The Flipper Table Clutch disengages.
16	Repeat Steps 2 through 7.
17	The card is fed out of the Printer.

Reviewing the Lamination Module Boot up Sequence

Step	Process
1	The Lamination Headlift turns until head up position is returned from Headlift Sensor.
2	The Lamination Ribbon motor activates to determine the presence of a roll of lamination.
3	The Lamination Flipper table homes itself.
4	The Card sensor checks for the presence of a card and ejects it if found.

Section 2: Specifications

The purpose of this section is to provide the User with specific information on the Regulatory Compliances, Agency Listings, Technical Specifications and Functional Specifications for the DTC550 Direct to Card Printer/Encoder User Guide (Rev. 1.0).

Regulatory Compliances

Term	Description
CSA (cUL)	The Printer manufacturer has been authorized by UL to represent the Card Printer as CSA Certified under CSA Standard C22.2 (No. 60950-1). **File Number:** E145118
FCC	The Card Printer complies with the requirements in Part 15 of the FCC rules for a Class A digital device. (**Note:** These requirements are designed to provide reasonable protection against harmful interference in a commercial environment.)
EMC	The Card Printer has been tested and complies with EN55022 Class A and EN61000-3-2, EN61000-3-3 and EN55024. (**Note:** Based on the above testing, the Printer manufacturer certifies that the Card Printer complies with all current EMC directives of the European Community and has placed the CE mark on the Card Printer.)
UL	The Card Printer is listed under UL IEC 60950-1 (2001) INFORMATION TECHNOLOGY EQUIPMENT. **File Number:** E145118

Agency Listings

Term	Description
EMC Standards	CE, FCC, CRC c1374, EN 55022 Class A, FCC Class A, EN 55024, EN61000-3-2 and EN61000-3-3.
Safety Standards	UL IEC 60950-1 (2001), CSA C22.2 No. 60950-1 and EN 60950-1:2001.

FCC Rules

This device complies with Part 15 of the FCC rules. Operation is subject to the following two conditions:

1. This device may not cause harmful interference.
2. This device must accept any interference received, including interference that may cause undesired operation.

Note (see below):

- This equipment has been tested and found to comply with the limits for a Class A digital device, pursuant to part 15 of the FCC Rules. These limits are designed to provide reasonable protection against harmful interference when the equipment is operated in a commercial environment.
- This equipment generates, uses, and can radiate radio frequency energy and, if not installed and used in accordance with the instruction manual, may cause harmful interference to radio communications.
- Operation of this equipment in a residential area is likely to cause harmful interference in which case the user will be required to correct the interference at his or her own expense. Reference Safety Messages in this document.

Safety Messages (review carefully)

Symbol	Critical Instructions for Safety purposes
Danger:	**Failure to follow these installation guidelines can result in death or serious injury.** Information that raises potential safety issues is indicated by a warning symbol (as shown to the below). • **To prevent personal injury**, refer to the following safety messages before performing an operation preceded by this symbol. • **To prevent personal injury**, always remove the power cord prior to performing repair procedures, unless otherwise specified. • **To prevent personal injury**, make sure only qualified personnel perform these procedures.
Caution:	**This device is electrostatically sensitive. It may be damaged if exposed to static electricity discharges.** Information that raises potential electrostatic safety issues is indicated by a warning symbol (as shown to the below). • **To prevent equipment or media damage**, refer to the following safety messages before performing an operation preceded by this symbol. • **To prevent equipment or media damage**, observe all established Electrostatic Discharge (ESD) procedures while handling cables in or near the Circuit Board and Printhead Assemblies. • **To prevent equipment or media damage**, always wear an appropriate personal grounding device (e.g., a high quality wrist strap grounded to avoid potential damage). • **To prevent equipment or media damage**, always remove the Ribbon and Cards from the Printer before making any repairs, unless otherwise specified. • **To prevent equipment or media damage**, take jewelry off of fingers and hands, as well as thoroughly clean hands to remove oil and debris before working on the Printer.

Technical Specifications

Term	Description
Accepted Standard Card Size	**CR-79 Adhesive Back:** 3.303 in. x 2.051 in. (83.9mm x 52.1mm) (cannot be laminated with DTC550-LC) **CR-80:** 3.375 in. x 2.125 in. (85.6mm x 54mm) (corresponds to ID1)
Accepted Card Thickness	.020 in. (20 mil) to .050 in. (50 mil) (.254mm to 1.27mm); unless laminating.

Continued on the next page

Technical Specifications (continued)

Term	Description
Accepted Card Types	Prox (125 kHz): HID Proximity Cards (read only) Contactless (13.56 MHz) • Gemplus GemEasyLink 332 (soon to be GemProx) • ISO 14443-A Mifare Cards (Mifare Ultra Light, Classic 1k / 4k, Pro X) - Read/Write • ISO 14443-B Contactless Cards (T=CL), (and DESFire available with GemProx next month???) - Read/Write HID iClass (OEM 100 & 300) • ISO 15693 - Read/Write (iClass) • ISO 14443-A - read only (Mifare card serial number) • ISO 14443-B2 - Read/Write (iClass) Contact • ISO 7816-1,2,3,4 contact cards (T=0, T=1 protocol)
Accepted Card Compositions	PVC or polyester cards with polished PVC finish; monochrome resin required for 100% polyester cards.
Barcodes	Code 39, Code 128 B & C with and without check digit (available with embedded font and barcode option) • 2 of 5 • UPC-A • EAN 13 • PDF-417 2D barcode and other symbologies (available via Windows Driver)
Card Input Hopper Capacity	Dual-stack Hopper, 200 cards (30 mil); auto or manual feed
Card Output Hopper Capacity	100 cards (30 mil)

Continued on the next page

Technical Specifications (continued)

Term	Description
Card Cleaning	Removable card cleaning cartridge with replaceable cleaning roller.
Colors	Up to 16.7 million colors and 256 shades per pixel.
Dimensions	• **DTC550:** 10.75 in. H x 18.5 in. W x 11 in. D (273mm x 470mm x 279mmD). • **DTC550-LC:** 10.75 in. H x 30.5 in. W x 11 in. D (273mm x 775mm x 279mmD). • **LC Module:** 10.25” H x 30” W x 11”D/260mm H x 762mm W x 279mmD
Display	SmartScreen LCD Control Panel; LED display on Card Lamination Module.
Encoding Options	ISO Magnetic Stripe Encoding Module; dual high- and low-coercivity; Tracks 1, 2 and 3; and Super-hi-co (4000 Oe) Contact Smart Card Encoder read from and writes to all ISO 7816-1/2/3/4 memory and microprocessor card using the T=0 or T=1 protocol, as well as synchronous cards. 13.56 MHz Contactless Smart Card Encoders Gemplus GemEasyLink 332 (soon to be GemProx) • ISO 14443-A Mifare Cards (Mifare Ultra Light, Classic 1k / 4k, Pro X) - Read/Write • ISO 14443-B Contactless Cards (T=CL), (and DESFire available with GemProx next month???) - Read/Write HID iClass (OEM 100 & 300) • ISO 15693: Read/Write (iClass) • ISO 14443-A: Read only (Mifare card serial number) • ISO 14443-B: Read/Write (iClass) 125 kHz Prox Card Reader • HID read-only, 24-bit to 85-bit. Typical card is 26-bit format or 35-bit Corporate 1000 format.

Continued on the next page

Technical Specifications (continued)

Term	Description
Fargo Certified Supplies	Fargo Card Printer/Encoder require highly specialized media to function properly. To maximize printed card quality, printhead life and Printer/encoder reliability, use only Fargo Certified Supplies. Fargo warranties are void, where not prohibited by law, when non-Fargo Certified Supplies are used.
Fonts	TrueType fonts are available via the Windows driver.
Humidity	20% to 80% Non-Condensing.
Interface	USB only for print
Memory	4 MB RAM
Options	• Printer Cleaning Kit • External Print Server (Windows only; required for stand-alone networking of Printer/encoders) • Card Lamination Module
Operating Temperature	65ºF to 80ºF (18ºC to 27ºC).
Overlaminate Options (for LC)	Thermal Transfer Overlaminate, .25 mil thick PolyGuard Overlaminate, 1.0 mil and .6 mil thick All overlaminates available in clear, holographic globe design or custom holographic design
Print Area	**CR-80 edge-to-edge:** (3.37 in. x 2.12 in./85.5mm x 53.5mm) **CR-79:** (3.3 in. x 2.051 in./83.8mm x 52.1mm)
Printing Method	Dye-Sublimation/Resin Thermal Transfer.
Printing Resolution	Up to 16.7 million colors and 256 shades per pixel. 300 dpi (11.8 dots/mm)

Continued on the next page

Technical Specifications (continued)

Term	Description
Print Speed – Batch Mode	• **K:** 7.0 seconds per card/514 cards per hour • **BO:** 12 seconds per card/300 cards per hour • **YMCKO:** 22 seconds per card/163 cards per hour • **YMCKO:** 30 seconds per card/120 cards per hour • **YMCK (w/Lamination):** 28 seconds per card/128 cards per hour (see related note below) • **YMCKK (w/Lamination):** 35 seconds per card /102 cards per hour Indicates the Print Ribbon type and the number of Ribbon panels printed where Y=Yellow, M=Magenta, C=Cyan, K=Resin Black, B=Dye-Sublimation Black and O=Overlay. • Print speeds do not include the time needed for the PC to process the image. • Process time is dependent on the size of the file, the CPU, amount of RAM and the amount of available resources at the time of the print. • Print speed indicates an approximate batch print speed and is measured from the time a card feeds into the Printer to the time it ejects from the Printer. (**Note:** The single card print speeds will be slower than the batch print speeds listed above since batch print speed is enhanced by the Printer's multi-tasking capabilities when printing multiple cards in succession.)

Continued on the next page

Technical Specifications (continued)

Term	Description
Print Ribbon options	• YMCKO (500 image, with RFID) • YMCKOK (400 image, with RFID) • YMCKK (500 image, with RFID) • YMCFKO and YMCFKOK (SecureMark Ribbons) • Resin, Black Premium (3000 image, with RFID) • Resin, Black Standard (3000 image, with RFID) • Resin, Blue (1000 image, with RFID) • Resin, Green (1000 image, with RFID) • Resin, Red (1000 image, with RFID) • Resin, White (1000 image, with RFID) • Resin, Gold Metallic (500 image, with RFID) • Resin, Silver Metallic (500 image, with RFID) • Resin, with Overlaminate (KO) (1500 image, with RFID)
Security Features	Card Hopper Lock (optional)
Software Drivers	2000/XP
Supply Voltage	• **DTC550:** 100-240 VAC, 1.2A • **DTC550-LC:** 100-240 VAC; Two Supplies (1.2A each)

Continued on the next page

Technical Specifications (continued)

Term	Description
Supply Frequency	50 Hz/60 Hz.
System Requirements	Windows® 2000 with Service Pack 4, Windows® XP with Service Pack 2 and Windows® Server 2003; x86 300 MHz computer with 64 MB of RAM or higher, 200 MB free hard disk space or higher, USB 1.1
Warranty	Printer (One year); optional Extended Warranty Program (U.S. only) Printhead (One year), unlimited pass with UltraCard™ Cards
Weight	**DTC550:** 20 lbs. (9.1 kg.) **DTC550-LC:** 39 lbs. (14.1 kg.) **LC Module:** 19 lbs. (8.6 kg.)

Functional Specifications

The Card Printer utilizes two different, yet closely related printing technologies to achieve its direct-to-card print quality for Dye-Sublimation and resin thermal transfer. The Card Printer will print from any IBM-PC® or compatible running Windows 2000 or Windows XP.

The following describes how each of these technologies works:

Function	Description
Dye-Sublimation	Dye-Sublimation is the print method the Card Printer uses to produce smooth, continuous-tone images that look photographic. (**Note:** This process uses a dye-based Ribbon roll that is partitioned by a number of consecutive color panels.) **Process Colors:** The panels are grouped in a repeating Series of three process colors - yellow, magenta and cyan (YMC), along the entire length of the Print Ribbon. **Panels:** The Printer always prints the yellow panel first, followed by the magenta panel and the cyan panel. **Printhead:** As the Print Ribbon passes beneath the Printhead, hundreds of thermal elements within the Printhead heat the dyes on the Ribbon. (**Note:** When these dyes are heated, they vaporize and diffuse into the surface of the card. A separate pass is made for each of the three color panels on the Ribbon.) **Color Shades:** By combining the colors of each panel and by varying the heat used to transfer these colors, it is possible to print up to 16.7 million different shades of color. (**Note:** This blends one color smoothly into the next, producing photo-quality images with absolutely no dot pattern.) **Dye-Diffusion Thermal Transfer:** It is the process of heating a dye suspended in a cellulous substrate until the dye can flow, diffusing into the dye receptive surface of the card or InTM. This produces the image in the surface of the card.

Continued on the next page

Functional Specifications (continued)

Function	Description
Resin Thermal Transfer	Resin Thermal Transfer is the print method the Printer uses to print sharp black text and crisp bar codes that can be read by both infrared and visible-light bar code scanners. Like Dye-Sublimation, this process uses the same thermal Printhead to transfer color to a card from a resin-only Print Ribbon or the resin black (K) panel of a full color Print Ribbon. The difference, however, is that solid dots of resin-based ink are transferred and fused to the surface of the card. (**Note:** This produces very durable, saturated printing.)

Continued on the next page

Printer Components - Descriptions

Component	Description
Card Thickness Adjustment Lever	Adjusts the Printer to feed varying card thicknesses.

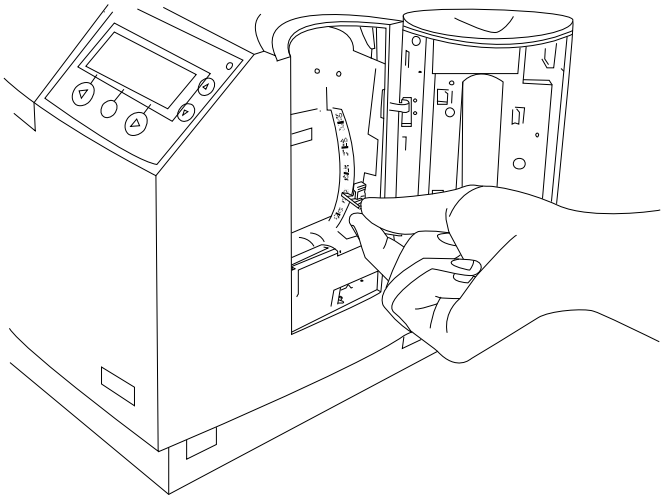

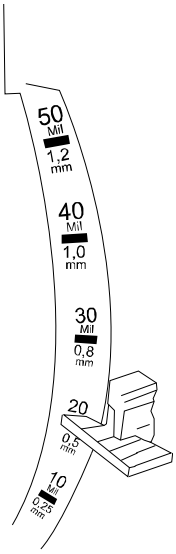

Printer Components: Descriptions (continued)

Component	Description
Card Cleaning Cartridge	Automatically cleans cards for higher print quality. (**Note:** Replace this roller with every ribbon or as needed.)

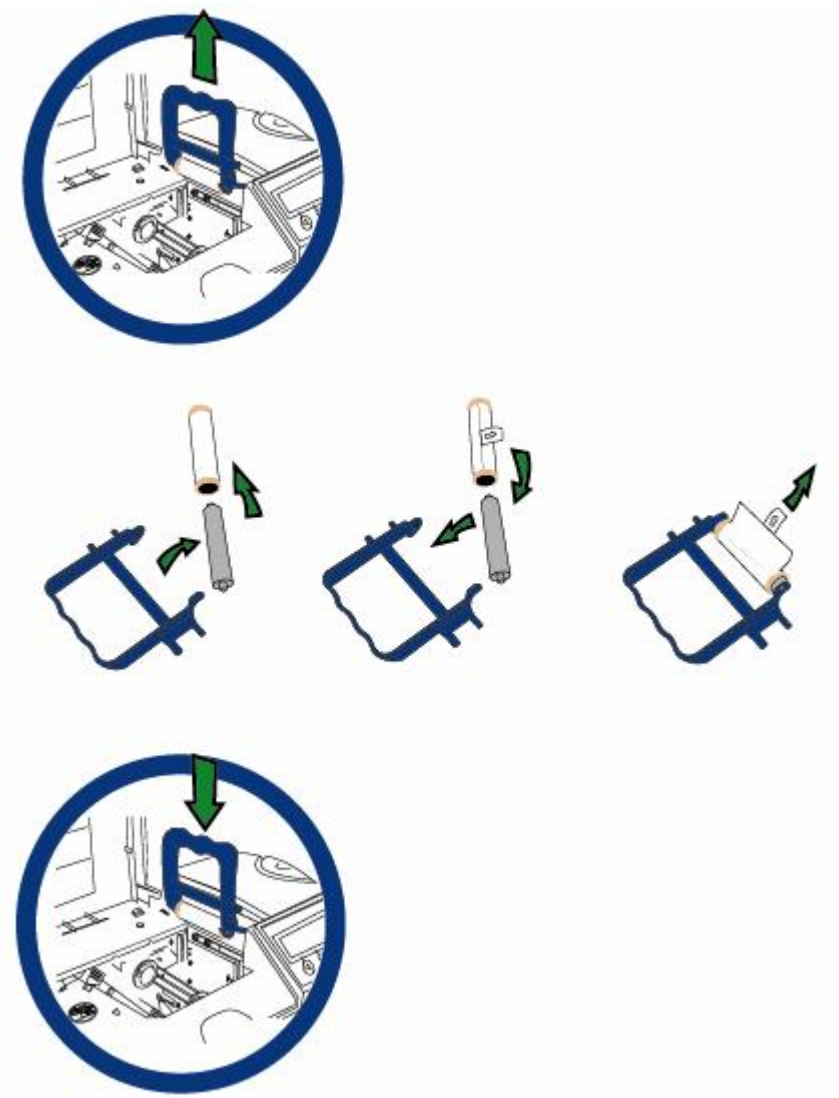

Printer Components: Descriptions (continued)

Component	Description
Card Input Hopper	Load blank cards into this Dual Input Hopper.

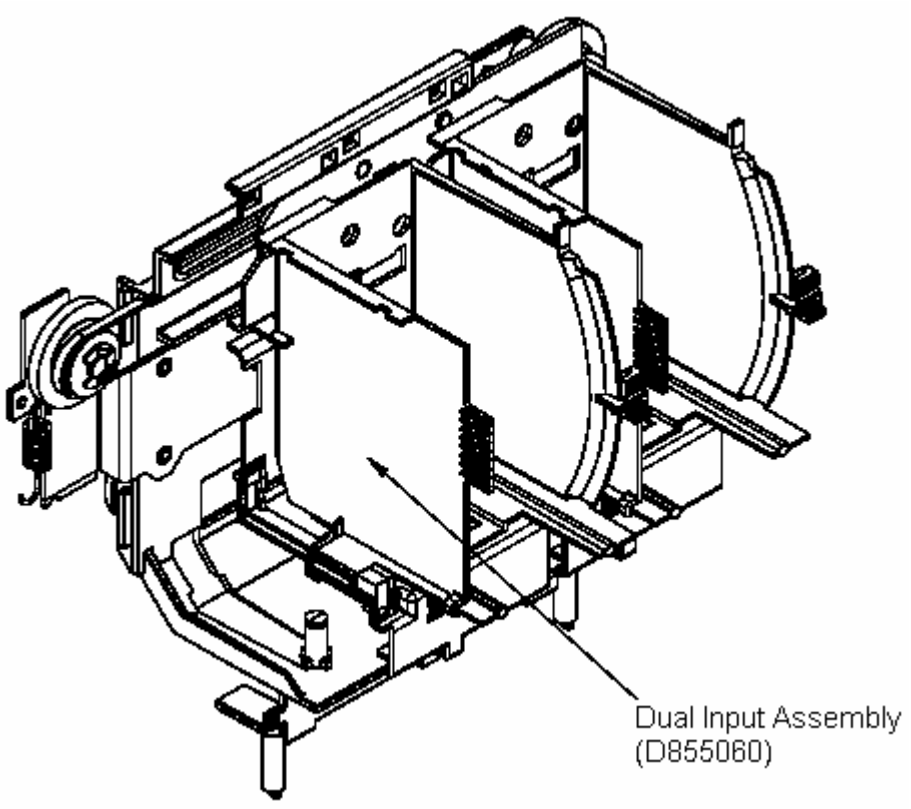

Printer Components: Descriptions (continued)

Component	Description
Card Output Hopper	Stores printed cards; up to 100, 30 mil cards.

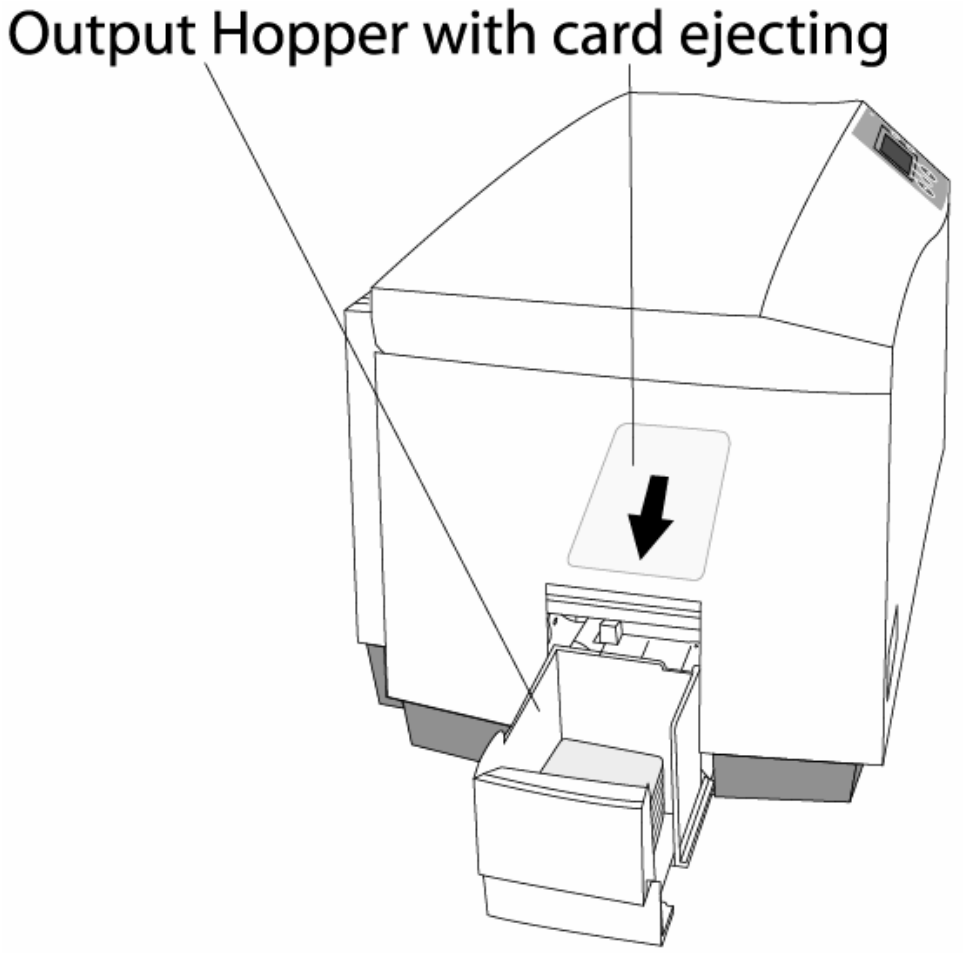

Printer Components: Descriptions (continued)

Component	Description
Card Supply Window	Check the current card supply at-a-glance, without having to open the Card Hopper Door.
Card Input Hopper Lock	This lock allows you to lock the Card Input Hopper Door to help prevent the theft of blank cards.
Exception Card Slot	Insert a single exception card into this slot if you would like to print onto a card other than those loaded in the Card Input Hopper.
LCD display	Displays the current status of the Printer.
LED light	Indicates Printer ON, OFF, pause, status conditions and error conditions.

Continued on the next page

Printer Components: Descriptions (continued)

Component	Description
Printhead	This Print Station component actually does the printing. (**Note:** This component is fragile and must not be bumped or touched with anything other than a cleaning pen.)

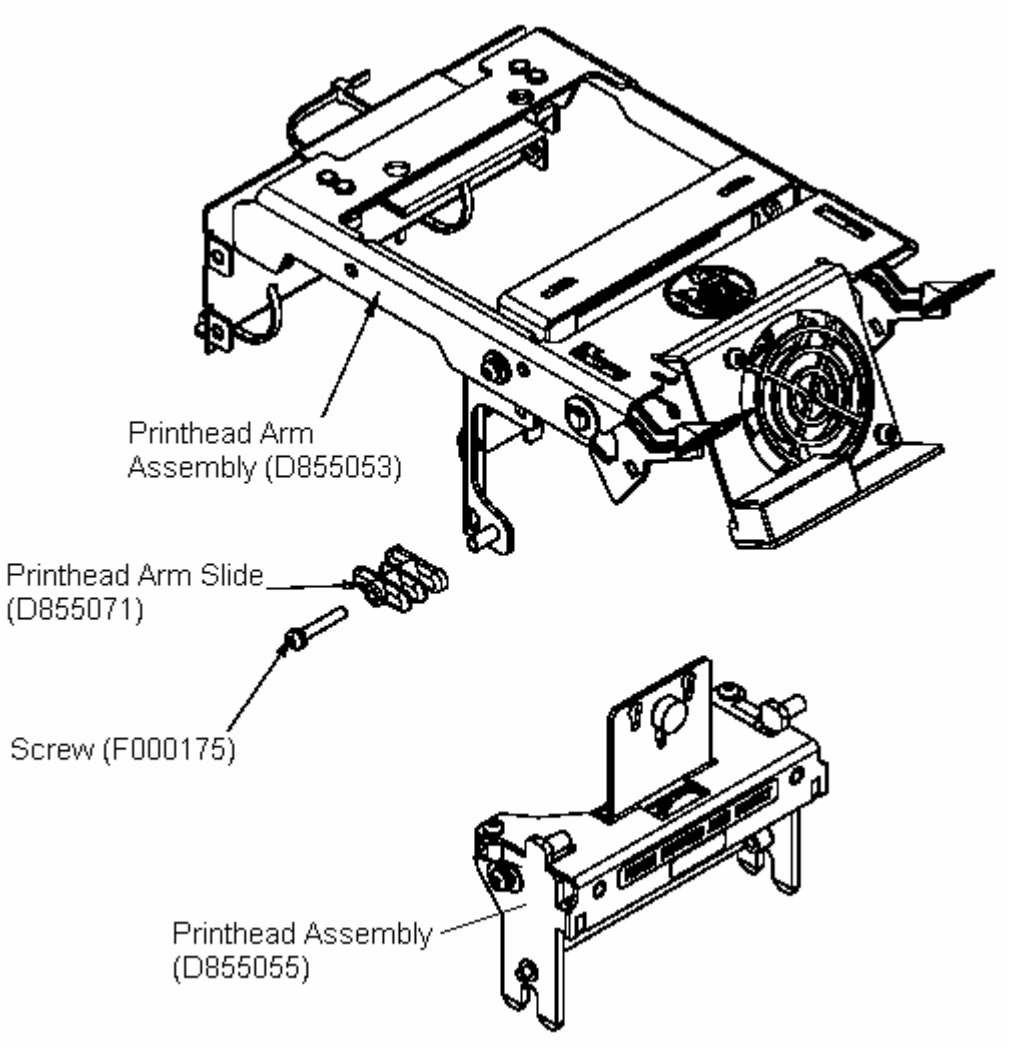

Printer Components: Descriptions (continued)

Component	Description
Power Switch	This switch turns the Printer power ON and OFF.
Power Port	This port connects to the (included) power supply.
Securing Latches	These latches lock the Print Station securely in place when closed.
Softkey Buttons	The button function is displayed above the button. The buttons change depending upon the Printer's mode of operation.
Scroll Buttons	These buttons are used to scroll through menus and sub-menus and to adjust certain menu options.
USB Interface Port	This port connects to a Windows PC with a parallel cable.
Serial Interface Ports	**For Encoding option:** These ports are provided only if your Printer includes one or more optional Encoding Modules.

Continued on the next page

Printer Components: Descriptions (continued)

Refer to the previous table.

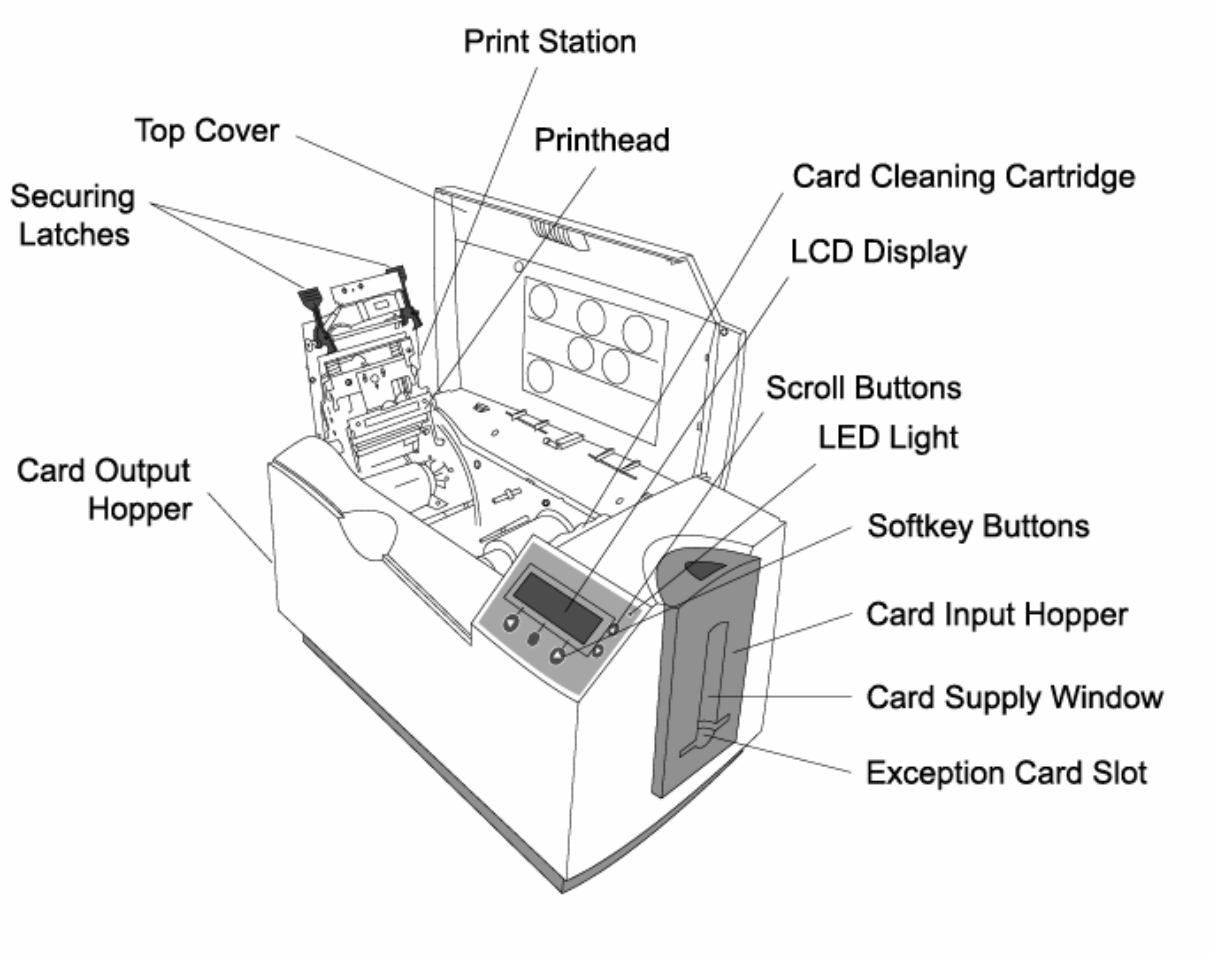

Printer Components: LCD and Softkey Control Pad

The Printer provides a four line, eighty (80) character LCD display that communicates helpful information about the Printer's operation.

- The top three lines of the LCD display will always be used to communicate print status, error messages and menu options.
- The bottom line of the LCD display will always be used to communicate the current function of the Printer's softkey buttons.

This section describes how the LCD display and Softkey Control Pad work together.

Component	Description
Softkey Buttons	The Printer has three **softkey buttons** that appear below the LCD display. (**Note:** Their current function is indicated by the words appearing above them. This function will change according to the Printer's current mode of operation.) • Press the corresponding softkey button for the correct selection. (**Note:** If no word appears above a particular button, this indicates it has no function in that particular mode of operation.) • Use the scroll buttons to scroll through help text, to navigate through the Printer's menus and to adjust certain Printer settings. (**Note:** The Printer has scroll buttons on its control pad located just to the right of the LCD display.) • If scrolling through a list, this symbol will change to ▲ if you have reached the bottom of the list or ▼ if you have reached the top.
LCD display	The Printer's LCD display will change according to the Printer's current mode of operation.
System Check Screens	When the Printer is first powered ON, the Printer's system check screens will briefly appear to: • Initialize the system. • Display the READY screen and current Firmware version.

Continued on the next page

Printer Components: LCD and Softkey Control Pad (continued)

Component	Description
Ready/Printer Open Screens	Once the Printer has finished its system check and with the Print and Transfer Stations closed, the Printer will display READY to indicate that the Printer is ready for operation. (**Note:** The Printer will stay in this mode until it receives a print job or it is turned OFF.) If the Top cover and Printhead Arm are opened, the Printer Open screen will appear. • Press either the **Forward** or **Back** buttons to move the Printer's card path Rollers in the indicated direction. In any of these screens, the Printer will always display the **Menu** option above the center softkey button. • Press this button to access the Printer's menu options. (**Note:** The **Menu** option is available only in the Ready/Printer Open screens.)
Print Status Screen	During operation, the LCD will indicate the current Print Status by showing you the area of the Printer that is active. It does this by displaying the following icons on the second line: • **FEEDING** indicates the Feeder Station is feeding a blank card into the Printer. • **ENCODING** indicates the Encode Station is encoding a card (appears only if you are using a Printer with an optional built-in Encoding Module). • **PRINTING** indicates the Print Station is printing onto the card. • **LAMINATING** indicates the Lamination Station is applying an overlaminate to a card (appears only if using a Printer equipped with the optional Card Lamination Module. See Card Lamination Module. Since the Printer is capable of performing several of these functions simultaneously, one or all of these icons may appear at once, depending on if you are printing just one card or a batch of cards. The Print Status screen always displays **Cancel** in the lower left and **Pause** in the lower right.

Continued on the next page

Printer Components: LCD and Softkey Control Pad (continued)

Component	Description
The **Cancel** button	Use this button to cancel print jobs and reset the Printer for the next print job. • This **Cancel** function will ask if you wish to cancel just the individual job or all jobs in the queue. You may also resume the current job by pressing **NO**.
Pause button	Use this button to pause the Printer at any time during operation. (**Note:** The Printer will always finish its current task before pausing. When the Printer is paused, the LED light will flash and the **Pause** softkey button will change to **Resume**.) Press **Resume** to continue Printer operation.

Continued on the next page

Printer Components: LCD and Softkey Control Pad (continued)

Component	Description
LED light	This light works in conjunction with the Printer's LCD display to help communicate the Printer's current status. (**Note:** It is especially effective when the User is too far away from the Printer to read the LCD display.) See the descriptions for Error Screens and Attention Screens after this LED Light display for more detail on the Printer's LCD display.

Continued on the next page

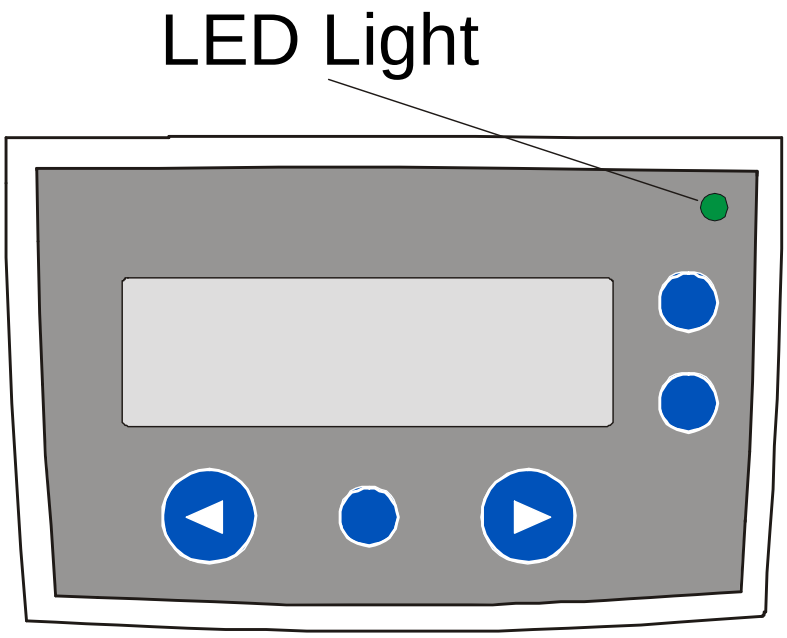

Printer Components: LCD and Softkey Control Pad (continued)

Component	Description
Error Screens (see previous section)	Your Printer is capable of communicating two similar yet different types of message screens: • The first is called an ERROR screen. This screen appears if an error occurs and will completely stop Printer operation. • In this case, the LCD will display ERROR on the first line and a brief description of the error on the second line. • If multiple errors occur at the same time, the first line will display ERROR 1 of 2 or whatever the total number of errors may be. To see the other error(s), use the scroll keys. • Press the **HELP** button to bring up the help screen explaining the nature of the error and how to correct it. If necessary, use the scroll buttons to scroll down the paragraph of help text. • Press **QUIT** when you are done reading. Once the error is corrected, resume operation or reset the Printer according to how you were instructed in the help screen.
Attention Screens (see previous section)	The second type of prompt is called an ATTENTION screen. • This screen will not stop Printer operation and serves to communicate helpful reminder (e.g., when running low on print supplies). • This screen communicates any other Printer conditions of which you should be aware. In this case, the LCD will display ATTENTION on the first line and a brief description of the condition on the second line. • If multiple messages need to be communicated at the same time, the first line will display ATTENTION 1 of 2 or whatever the total number of messages may be. • Like error messages, help text explaining the particular condition can also be accessed by pressing the **HELP** button.

Printer Components: Print Ribbons

The Card Printer utilizes both Dye-Sublimation and/or resin thermal transfer methods to print images directly onto blank cards. Since the Dye-Sublimation and the resin thermal transfer print methods (each) provide their own unique benefits, Print Ribbons are available in resin-only, Dye-Sublimation-only and combination Dye-Sublimation/resin versions.

This letter code indicates the type of Ribbon panel used with each Ribbon.

Y = Dye-Sublimation Yellow Panel

M = Dye-Sublimation Magenta Panel

C = Dye-Sublimation Cyan Panel

K = Resin Black Panel

O = Overlay Panel

O = Overlay Panel

Printer Components: Resin-Only Print Ribbons

Resin-only Print Ribbons consist of a continuous roll of a single resin color. No protective overlay panel (O) is provided since resin images do not require the protection of such an overlay..

Type	Description
Standard Resin Black (K) (provides 3,000 prints)	This Ribbon provides high resin durability ideal for most general-purpose monochrome ID card applications. Resin black bar codes are readable by both infrared and visible-light bar codes scanners. K
Premium Resin Black (K) (provides 3,000 prints)	This Ribbon provides maximum resin durability ideal for applications such as access control where cards are repeatedly swiped through a Magnetic Stripe reader. Resin black bar codes are readable by both infrared and visible-light bar codes scanners. (**Note:** Using a Premium Resin Black Ribbon will provide better photo realistic output.) K
Colored Resin (provides 1,000 prints)	Several colored resin Ribbons are available in a variety of colors for customizing or color-coding resin-only ID cards.
Metallic Resin (provides 500 prints)	Metallic resin Ribbons are available for printing resin images with a unique metallic sheen.

Printer Components: Dye-Sublimation Print Ribbons

Note that the Printer requires both specialized and authorized Print Ribbons in order to print and function properly.

Step	Procedure
1	Do not run the cards with a contaminated, dull or uneven surface through the Printer. **Caution:** Printing onto such cards will ultimately lead to poor print quality and will greatly reduce the life of the Printhead.
2	Always store the card stock in its original packaging or in a clean, dust-free container.
3	Do not print onto cards that have been dropped or soiled. (**Note:** Printhead damage caused by contaminated or poor quality cards will automatically void the Printhead's factory warranty.)
4	If printing onto cards with a pre-punched slot, do not print over the area of the card with the punched slot. (**Note:** To avoid this area when printing, use the options in the Overlay / Print Area tab to omit printing in this area or punch the slot after the card has printed.)

Printer Components: Dye-Sublimation/Resin Print Ribbons

Type	Description
Dye-Sublimation/ resin Print Ribbon	The Dye-Sublimation/resin Print Ribbon combines the yellow (Y), magenta (M) and cyan (C) dye-sublimation panels with a resin black (K) panel. By combining both types of Ribbon panels, this Ribbon can be used to print full-color, photo-quality images with the dye-sublimation panels along with sharp, black text and bar codes with the resin black panel. A clear overlay panel (O) is also included on most Ribbons to protect the dye-sublimation images. Dye-Sublimation images must have an overlay panel applied to them or they will quickly begin to wear or fade.
Full-Color (YMCKO)	This Ribbon is used to print full-color photo ID cards along with resin black text and bar codes. Both infrared and visible-light bar code scanners can read bar codes printed with resin black. • An overlay panel (O) is included to protect the full-color dye-sublimation printing.
YMCKOK	The designation of colored Ribbon by the Panels of color in the order in which they are printed: Yellow (Y), Magenta (M), Cyan (C), Black (K), Overlay (O), Black (K) (used for backside, black only printing).
YMCFKO	The designation of colored Ribbon by the Panels of color in the order in which they are printed: Yellow (Y), Magenta (M), Cyan (C), Flourescent (F), Black (K), Overlay (O), (used for backside, black only printing). 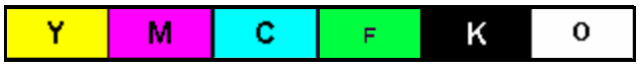

Printer Components: Blank Cards

Caution: Never run cards with a contaminated, dull or uneven surface through the Printer. Printing cards on this surface can lead to poor print quality and can greatly reduce the life of the Printhead. Always store the card stock in its original packaging or in a clean, dust-free container. Do not print onto cards that have been dropped or soiled. Printhead damage caused by contaminated or poor quality cards will automatically void the Printhead's factory warranty.

Type	Description
Card Size	The Card Printer accepts the following: CR-79 sized cards (3.303” L x 2.051” W/83.9mm L x 52.1mm W) with a thickness of 20 mil to 50 mil OR CR-80 sized cards (3.375” L x 2.125” W/85.6mm L x 54mm W; with a thickness of 20 mil. to 50 mil.). This does not apply for the LC Printers.
Card Design	The Printer will print onto any card with a clean, level and polished PVC surface. (**Note:** Although the Printer is equipped with card cleaning Rollers, it is very important to always print onto cards specifically designed for direct-to-card Dye-Sublimation printing.)
Card Surface	Suitable cards must have a polished PVC surface free of fingerprints, dust or any other types of embedded contaminants. Cards must have a completely smooth, level surface in order for the Printer to achieve consistent color coverage. Some types of Proximity cards, for example, have an uneven surface which will inhibit consistent color transfer. Some Smart Card chips are raised slightly above the cards surface, which also results in poor color transfer.

Printer Components: Blank Cards (continued)

Type	Description
UltraCard Stock	Due to the importance of using high-quality blank cards, a factory-approved card stock called UltraCard™ is available and recommended for best results. UltraCard stock has a glossy PVC laminate on top and bottom and is optically inspected to provide the cleanest, most scratch and debris-reduced cards possible. Two types of these cards are available: UltraCard and UltraCard III. **UltraCard** stock has a PVC core and offers medium card durability. **UltraCard III** stock has a 40% polyester core and offers high durability. Both types of UltraCards produce printed images with a glossy, photo-quality finish.

Printer Components: Upgraded 81754 PVC Cards

The upgraded 81754 PVC cards are designed for a sharper card image quality and for reduced debris and defects on Fargo Card Printers. Carefully read these detailed notes and instructions before applying this information to your Fargo Printer or Printers.

- **Technician Note 1:** The new card lot number starts at **Lot # 2010104** with date codes that started on **04/01/2003**. The photo (below) shows a lot number that starts after **Lot # 2010104**, indicating a new card lot number. The **card lot number** and **date** can be read on the bar code label attached to the shrink-wrapped stack of 100 cards, as shown below. All new Fargo Printers with a serial number (S/N) starting with A320 will have factory settings for these new 81754 PVC cards.

- **Technician Note 2:** Do not use the new 81754 PVC card stock with Fargo laminating Printers/encoders. This same guideline is used for the existing 81754 PVC card stock. Fargo recommends using the UltraCard III stock with the Fargo laminating Printers/encoders.

Reviewing the upgraded 81754 PVC Cards (continued)

Follow these two (2) instructions below:

1. **Instruction for new 81754 PVC card stock:** Increase the Printer Driver's Dye-Sub Intensity to print with the new 81754 PVC card stock on Fargo Card Printers (S/N A319 and older). See the chart provided below. See the appropriate Fargo service documents for specific Printer Driver instructions.

Card	New Printer (S/N A320 and newer)	Old Printer (S/N A319 and older)
New Card	No Change Necessary	Increase the Dye-Sub Intensity as follows: DTC550: 5 - 10 %

2. **Instruction for existing 81754 PVC card stock:** The Printer Driver's Dye-Sub Intensity setting may or may not need to be decreased to print existing card stock. See the chart provided below. See the appropriate Fargo service documents for specific Printer Driver instructions.
   - **Technician Note 1:** To control the brightness of the image, adjust the **Dye-Sub Intensity** slide on the **Image Color** tab of the Printer Driver.
   - **Technician Note 2:** Moving the **Dye-Sub Intensity** slide to the left causes less heat to be used in the printing process, thus generating a lighter print.

Card	New Printer (S/N A320 and newer)	Old Printer (S/N A319 and older)
Old Card	Decrease the Dye-Sub Intensity as follows: DTC550: 5 - 10 %	No Change Necessary

Printer Components: Card Input and Output Hoppers

Type	Description
Card Input Hopper	The Card Input Hopper is where cards are initially loaded for printing, as shown below. The Printer's Hopper provides a large door that opens up wide to make card loading simple and closes securely to help protect the card stock. (**Note:** The Printer will hold a maximum of 100 cards in each Card Input Hopper, based on a standard 30 mil. card thickness.)
Card Output Hopper	All standard Card Printers provide a 100 card capacity Card Output Hopper (based on a standard 30 mil card thickness). (**Note:** This Hopper stores the cards after they are printed.)

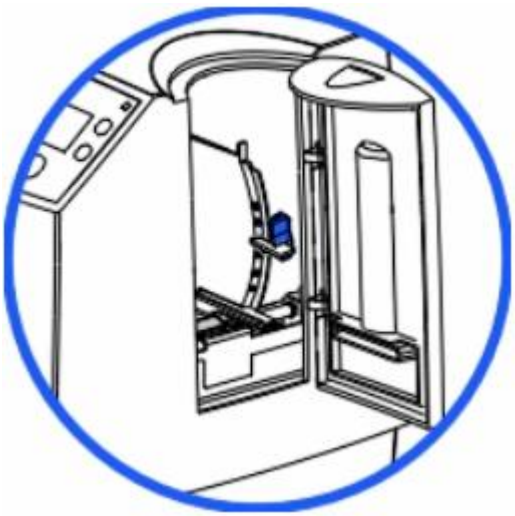

Reviewing the Card Lamination Module

Danger: The Printer's Lamination Roller can reach temperatures exceeding 350° F (175° C). Use extreme caution when operating the Laminator. Never touch the Lamination Roller unless the Printer has been turned off for at least 20 to 30 minutes.

Select Printer models support the attachment of an optional Card Lamination Module. This module can be ordered pre-installed on your Printer from the factory or can be ordered separately as a field upgradeable module.

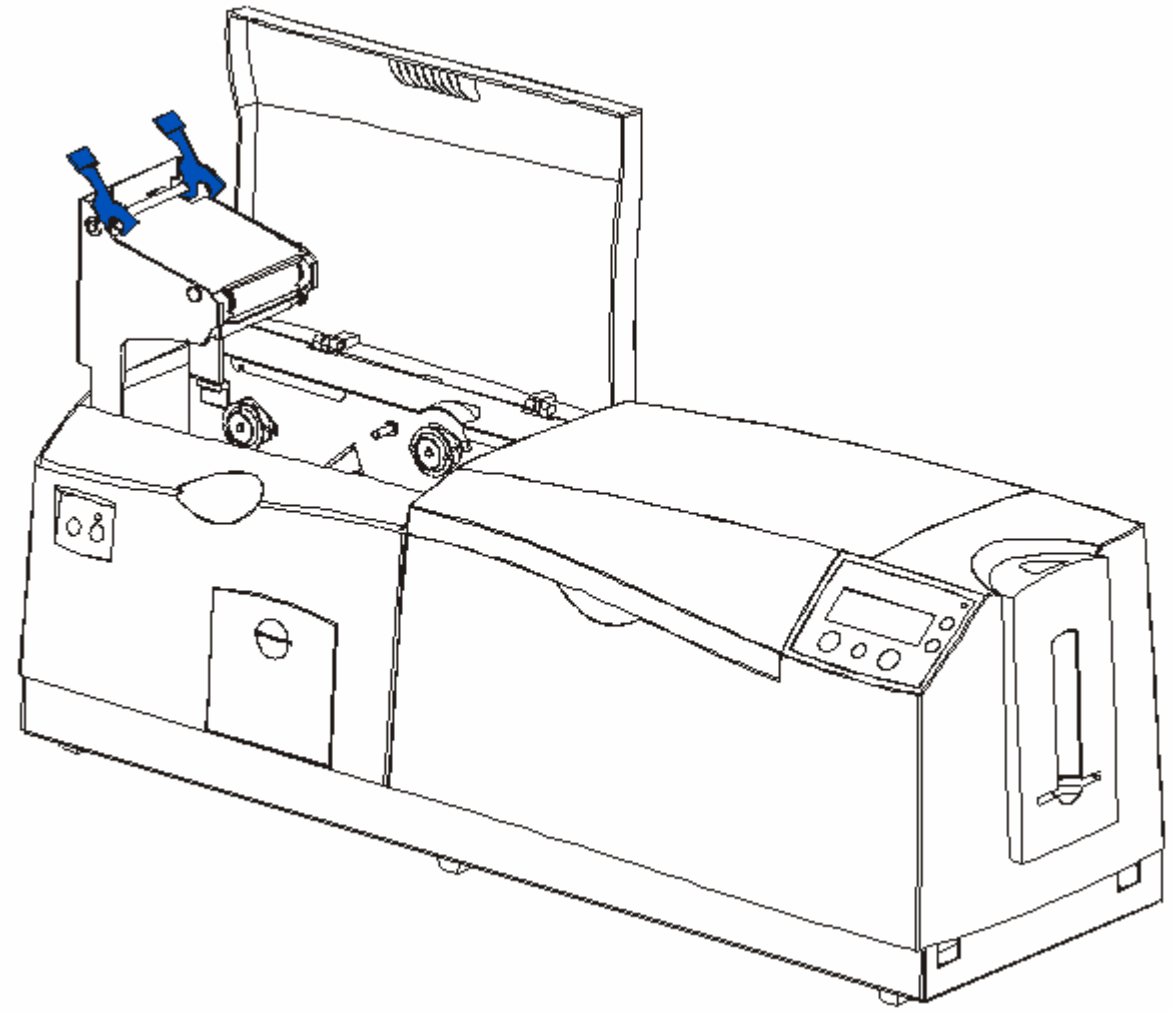

Reviewing the Card Lamination Module (continued)

Here is another display of the Card Lamination Module.

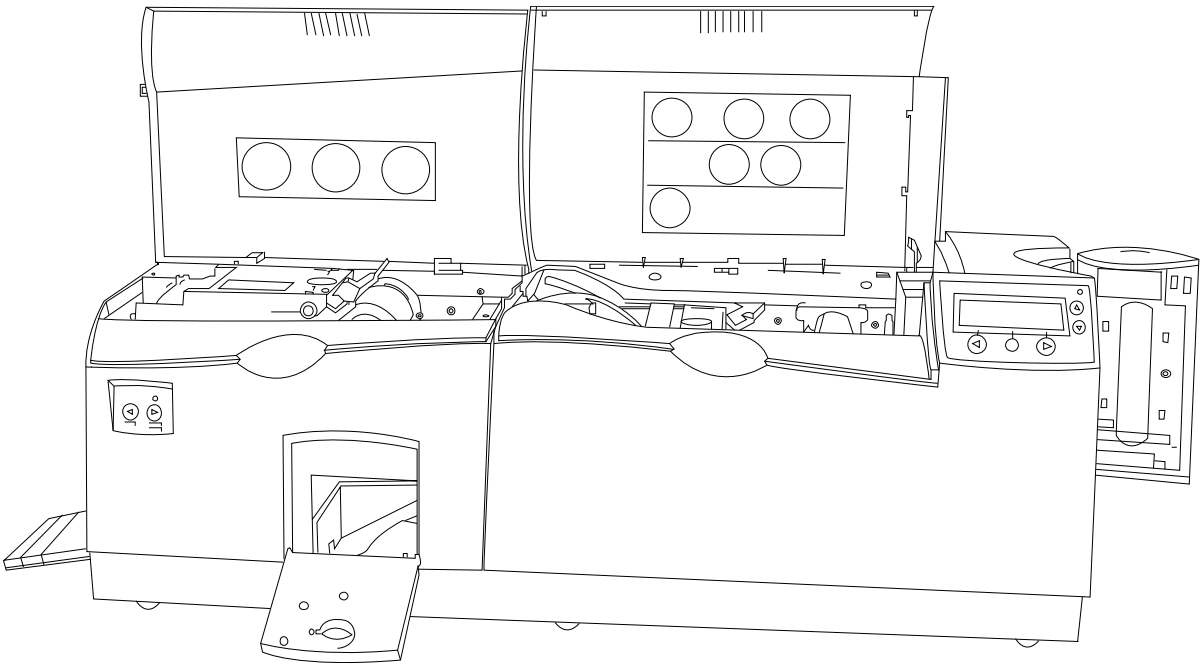

Reviewing the Lamination Top Cover and Station

Component	Description	Cross Reference
Lamination Top Cover	Opens to allow access to the Lamination Station, overlaminate and card path.	See the Loading the Overlaminate procedure.
Lamination Station	Transfers overlaminates onto cards via its heated lamination Roller. The Lamination Station must be closed in order for the Printer to begin laminating.	See the Loading the Overlaminate.

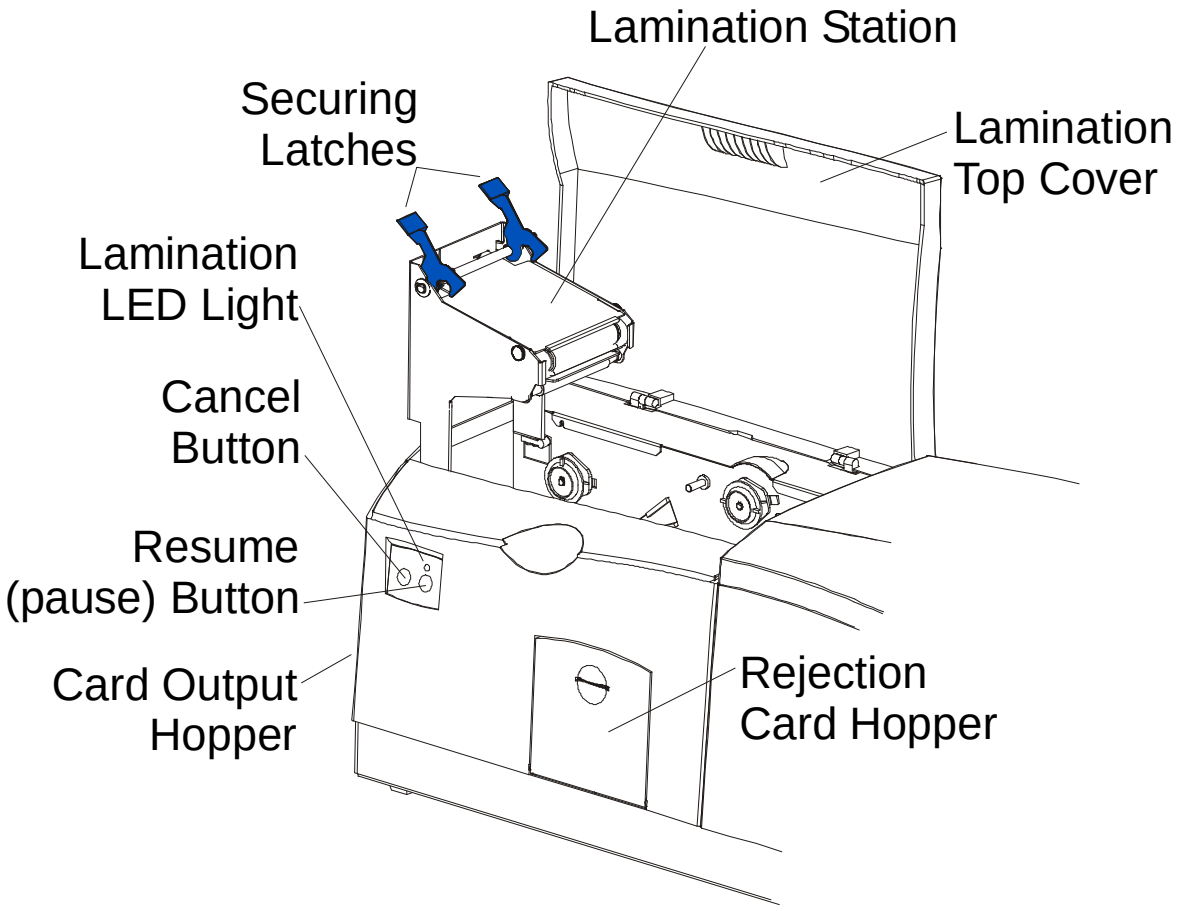

Reviewing the Securing Latches and Lamination LED light

Component	Description	Cross Reference
Securing Latches	Locks the Lamination Station securely in place when closed.	See the Using the Lamination tab (only with Card Lamination Module) procedure.
Lamination LED light	The Lamination LED light works in conjunction with the Printer's LCD display to help communicate the Printer's current status. The following explains how to interpret the LED light. • **Off:** Indicates the Printer and Lamination Module power is OFF. • **Solid Green light:** Indicates the Card Lamination Module is ready for operation. • **Slow Flashing Green light:** Indicates the **Lamination Module's (pause)** button was pushed and that the Lamination Module is paused. This also occurs when the Lamination Station is open. • **Fast Flashing Green light:** Indicates the Lamination Module is in need of attention due to an error or an error condition. Refer to the Printer's LCD display for information.	See the Troubleshooting the LCD Messages section.

Reviewing the Cancel button

Component	Description	Cross Reference
Cancel Button	The **Cancel** button serves to cancel the current lamination job and reset the Card Lamination Module for the next lamination job. • If a card is left within the Lamination Module after a print job is canceled, it will automatically be ejected into the Rejection Card Hopper. (**Note:** With the Lamination Module's Transfer Station open, this button can also be used to manually rotate the Feed Rollers forward. This is helpful when cleaning the Rollers or if clearing jammed media.) • If you are printing and laminating simultaneously and you would like to cancel both the print and lamination jobs, press the Printer's **CANCEL** softkey button. (**Note:** This will cancel all jobs in the Printer. Any card currently laminating will finish and eject. The Lamination Module's **Cancel** button cancels only the lamination job.)	See Card Lamination Module.

Continued on the next page

Reviewing the Resume (pause) button

Component	Description	Cross Reference
Resume (pause) button	Press the **Resume** button to resume operation after an error condition is cleared. • If an error occurs, the Lamination Module's LED will flash and the Printer's LCD will report the specific error. • If this happens, correct the error and press the Lamination Module's **Resume** button to continue printing. Press this button to pause the Lamination Module during normal operation. (**Note:** The Lamination Module will always finish its current task before pausing.) • If this button is pressed while a card is being laminated, the Lamination Module will pause only after the current card has finished laminating and the Lamination Module has reached a safe stopping point.) • If the Printer is paused, the LED light will flash slowly and will return to solid when operation is resumed. (**Note:** with the Lamination Station open, the **Resume** button can also be used to manually rotate the Feed Rollers backward. This is helpful when cleaning the Rollers or when clearing jammed media.)	See the Using the Lamination tab (only with Card Lamination Module) procedure.

Reviewing the Rejection Card Hopper and Card Output Hopper

Component	Description	Cross Reference
Rejection Card Hopper	The Rejection Card Hopper helps to separate potentially bad cards from a stack of good cards, which it ejects into the Card Output Hopper. The Printer will automatically eject cards into this Hopper to indicate: • There is a printing error, laminating error or encoding error. • There is a card is left in the Printer after a print job is canceled or the Printer restarted.	See the Using the Lamination tab (only with Card Lamination Module) procedure.
Card Output Hopper	Stores up to 100 printed cards (30 mil cards). a. When the Hopper has reached its maximum capacity of cards, note that the operation pauses and an Output Hopper Full message appears on the Printer's LCD display. b. Remove the stack of cards from the Hopper. c. Press the Lamination Module's **Resume** button to continue. (**Note:** If printing onto oversized cards, the Card Output Hopper Door should be placed in the open position in order for these larger cards to eject properly.)	See the Using the Lamination tab (only with Card Lamination Module) procedure.

Reviewing the Module and Printer interaction

Term	Description	Cross Reference
Module and Printer interaction	The Card Lamination Module works in conjunction with the Printer to apply a variety of different overlaminates to printed cards, providing increased card durability and security. The Lamination Module features its own LED indicator light and control buttons so it can conveniently be operated separately from the Printer. (**Note:** This means that when printing a batch of cards, for example, the Printer can be encoding and printing one card while the Lamination Module laminates another card for maximum efficiency.) In fact, you can even open the Lamination Module to replace the overlaminate while the Printer is printing or encoding and vice versa.	See the Using the Lamination tab (only with Card Lamination Module) procedure.

Reviewing the Module and LCD display interaction

Term	Description	Cross Reference
Module and LCD display interaction	For ease of operation, the Card Lamination Module works in tandem with the Printer's LCD display to communicate status message such as when an error occurs or when it is time to replace the overlaminate material. If a lamination error does occur, the Lamination Module's LED will flash and an attention level message will appear on the Printer's LCD display. (**Note:** Since it is an ATTENTION level message, it will not interrupt printing.) a. Correct the error. b. Press OK to clear the LCD's ATTENTION message. c. Press the Lamination Module's **Resume** button to resume operation or its **Cancel** button to cancel the current lamination job and accept the next. (**Note:** If canceled, the canceled card will eject into the Rejection Card Hopper.)	See the Using the Lamination tab (only with Card Lamination Module) procedure.

Continued on the next page

Reviewing the Module's Programmed Default Temperature

Term	Description	Reference
Programmed Default Temperature	Upon initial power up, the Lamination Module is programmed to heat the Lamination Roller up to its default temperature. • **Target Temperature:** If a print job is sent while the Lamination Module is heating up, the Printer's LCD display will read Laminator Warming. This will alternate with **LAM Temp: [current] [target]** which shows the current temperature of the Lamination Roller and the target temperature it is trying to reach. (**Note:** This indicates that the lamination Roller is heating to its preset temperature.) • **Initial Heating Process:** The initial heating process will generally take about 3 to 4 minutes. (**Note:** The LCD display will read **Laminator Warming** or **Laminator Cooling** whenever the Lamination Roller is heating up or cooling down to the prescribed temperature. When the Lamination Module has reached its target temperature, lamination will begin.)	See the Using the Lamination tab (only with Card Lamination Module) procedure.

Reviewing the Laminator Temperature Adjustment

Term	Description	
Laminator Temperature Adjustment	To change the temperature of the Laminator, adjust its temperature through the Lamination tab within the Printer Driver setup window. • **New Temperature Settings:** Once adjusted, the new temperature settings will be sent down with the next print job along with the rest of the Printer Driver information. Before printing begins, the laminator will automatically adjust itself to the new temperature setting. (**Note:** This new temperature setting will remain programmed within the Printer until it is once again changed within the Printer Driver or until the Printer is turned OFF.) • **Automatic Reset:** Whenever the Printer is turned OFF, the laminator will automatically reset itself and return to its default temperature the next time the Printer is turned ON. (**Note:** Pressing the Lamination Module's or Printer's **Cancel** button or switching the Printer power OFF and ON both serve to reset the Laminator to its default temperature.) • **Consistent Temperature:** The temperature setting within the Printer Driver stays the same until it is changed.	See the Using the Lamination tab (only with Card Lamination Module) procedure.

Reviewing the Overlaminates

IMPORTANT! Fargo Card Printers require highly specialized overlaminates to function properly. To maximize Printer life, reliability, printed card quality and durability, you must use only Fargo Certified Supplies. For this reason, the Fargo warranty is void, where not prohibited by law, if you use non-Fargo Certified Supplies. To order additional materials, please contact the authorized reseller.

Reviewing the Thermal Transfer Film and PolyGuard Overlaminates

Term	Description	Cross Reference
Thermal Transfer Film and PolyGuard Overlaminates	The Card Lamination Module will accept either a Thermal Transfer Film overlaminate or a polyester patch overlaminate called PolyGuard™. • **Thermal Transfer Film:** The Thermal Transfer Film overlaminate is a relatively thin material which covers a card edge-to-edge and provides a medium level of card durability and security.) • **PolyGuard overlaminate:** PolyGuard is a much thicker material which does not cover edge-to-edge, but provides an extremely high level of card durability and security. (**Note:** PolyGuard is available in either a 1.0 or .6 mil thickness and should always be used for those applications requiring the highest degree of card durability and security.)	See the Loading the Overlaminate procedure.

Reviewing the CR-90 or CR-100 Patch Size

Term	Description	Cross Reference
CR-90 or CR-100	PolyGuard overlaminate is available in a standard CR-80 patch size as well as a CR-90 and CR-100 patch size for laminating oversized CR-90 or CR-100 cards. (**Note:** Thermal Transfer Film overlaminate will accommodate CR-80 and CR-90 card sizes, but is not recommended for CR-100 cards.)	See the Loading the Overlaminate procedure.

Reviewing the Overlaminate Design

Term	Description	Cross Reference
Design	Both PolyGuard and the Thermal Transfer Film overlaminates are available in either a clear or generic secure holographic-type design. (**Note:** Custom holographic-type overlaminates are also available with specific designs, patterns, logos and security features.) Please contact the authorized reseller for more information about custom Overlaminates.	See the Loading the Overlaminate procedure.

Reviewing the Visual Security Solutions

VeriMarkTM Cards - 2-D holographic foil application

VeriMarkTM Cards are a low cost, customized 2-D holographic foil application, that is made in two steps.

- The first step is to emboss a base foil 1.9 cm (L) x 1.3 cm (H) onto the surface of a blank white card.
- The second step is debossing a custom made dye into the surface of the base foil - leaving a customized image, logo or text provided by the customer.
- Two separate color foils are used to contrast the impression.

End Users will be able to choose between 8 different card placements (4 - landscape) and (4-portrait) where the VeriMarkTM can be located. When its time to print through the driver, the End User will select the location on their organizations card design around which no printing and overlay will be placed.

Custom HoloMarkTM Cards

A Custom HoloMark TM Card is a three-dimensional holographic image transferred to metal foil and embossed to blank cards. The image is customer specific and the program mirrors our holographic laminates program with a couple exceptions.

Visual Security - Card Stock Part Numbers

All Visual Security Cards will be offered on the following Fargo Card Stocks only:

- P/N# 81754 Ultra Card
- P/N# 81762 Ultra Card III with hi-coercivity magnetic stripe
- P/N# 81763 Ultra Card III

Visual Security - Fargo Certified Overlaminates (Special Order in 50 quantity minimum)

- Part No. 82255: PolyGuard 1.0 mil for HoloMarkTM and VeriMarkTM Cards, Clear
- Part No. 82256: PolyGuard 1.0 mil for HoloMarkTM and VeriMarkTM Cards, High Resolution Globe design hologram with "Secure" micro-text

Visual Security Card Stock - Tolerances

- Tolerance of base foil placement will equal +/- .010" from the nearest edges of the card
- Tolerance of layered foil will equal +/- .010"

VeriMarkTM - Application Specifications

VeriMarkTM foils will cover a dimensional area of 1.9 cm length x 1.3 cm height. The exclusive areas are as follows:

- VeriMarkTM Card customers will be able to choose 1 of 8 pre-defined placements (corners) via Printer driver (4 positions) Landscape and (4 Positions) Portrait mode.
- VeriMarkTM foil placement will not interfere with card punch slots .
- Foil color base is silver; debossed impression is gold foil.
- VeriMarkTM foil placement will be located 0.4 cm from the edges of the card except for the top two locations on portrait orientation cards (positions E & F). The foil will be located 0.9 cm from the top of the card and 0.4 cm from the sides of the card.

HoloMarkTM and Custom HoloMarkTM - Application Specifications

HoloMarkTM and Custom HoloMarkTM foils will cover a dimensional area of 1.5 cm x 1.5 cm. The exclusive areas are as follows:

- HoloMarkTM and Custom HoloMarkTM card end-users will be able to choose 1 of 8 pre-defined placements (corners) via Printer driver (4 positions) Landscape and (4 positions) Portrait mode.
- HoloMarkTM foil placement will not interfere with card punch slots.
- Foil Color options will be silver or gold.
- Outside edge placement of Foil impression options on card will be 0.4 cm from edge of card.
- HoloMarkTM foil placement options will be at all four corners of card located 0.4 cm from edge of card.

Section 3: Secure Print Security Suite

Overview

SecureMark is a multi-faceted security solution that has been designed for Fargo Electronics, our Import Suppliers, their Integrators and our Printer customers. The SecureMark Media is the core component of the SecureMark program. Using RFID technology, SecureMark Media raises the level of customer security and convenience.

SecureMark Media is used together with the Printer Security CD to convert a generic Fargo Printer to a SecureMark Printer. After this conversion, the Printer will only accept Integrator specific SecureMark media (Ribbon).

In order to enter the Fargo Secure Print Security Suite, an administrator must enter a password and select a Printer. The Fargo Secure Print Security Suite consists of the products listed below.

Refer to the Fargo Secure Print Security Suite User Guide for more detailed procedures.

Print Notification Application

The Print Notification Application gives the User the ability to send an e-mail to an administrator when the Printer used during unauthorized hours.

Security Imaging Application

A Ribbon with a fluorescing panel is used to print an encrypted secure code, User-defined text or a User-defined security graphic. The secure code can be used to produce the Printer serial number, printing time and issue for a given card.

Print Diagnostics Application

An automated report captures Printer status and settings that can be sent to the Integrator (or Fargo) technical support. This report can be easily e-mailed or faxed in order to expedite faster service.

Supplies e-Ordering Application

This is an on-line Media ordering system that enables customers to order their unique SecureMark media directly from their Integrators. When they press the order button, the destination is their exact Ribbon on their Integrators web site.

Password Control Application

A password stored in the Printer protects a Printer from unauthorized use. Password protection can be based on elapsed time to disable the Printer, entering a password for each print or entering a password each day.

Print Security Suite – Main Window

Here are the icons for the five (5) applications within the Print Security Suite. See the Functional Specification section and the Software Instructions section in this same document for more detailed information on these five (5) applications. **Caution:** Be sure and save your work in the Printer Security Suite. By selecting Save All on the File dropdown menu, you can save your work on all active applications.

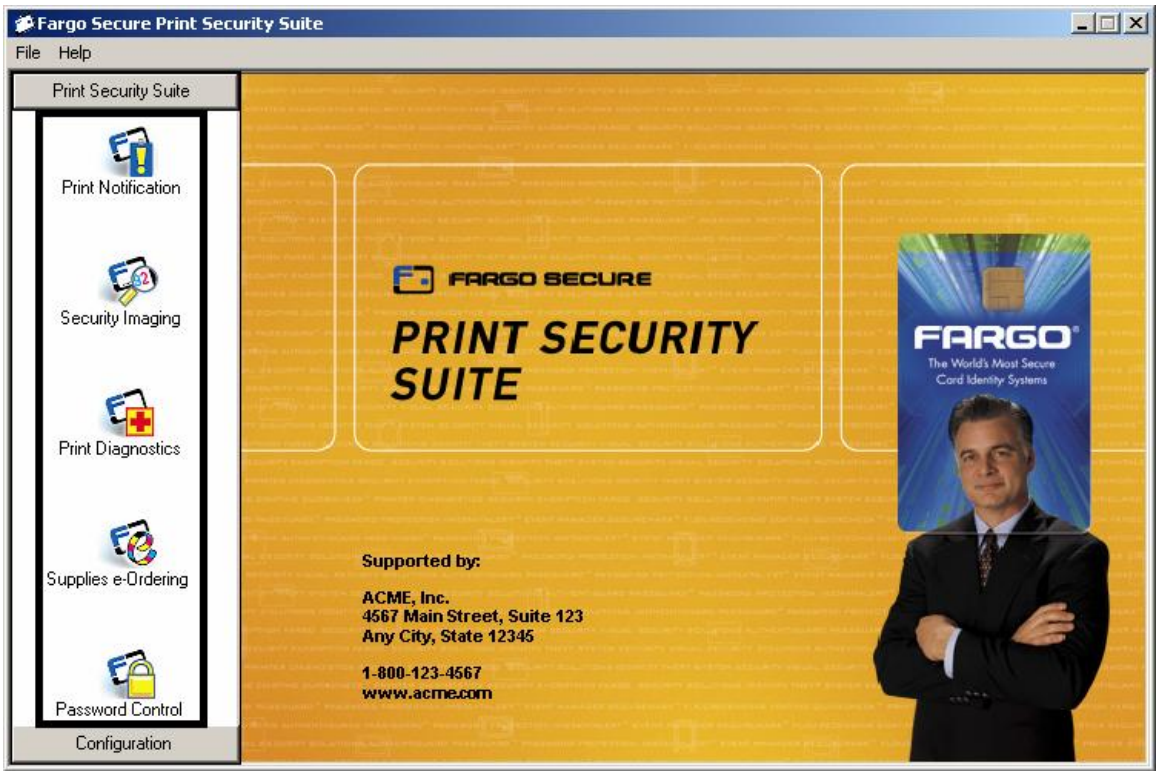

SecureMark Media

SecureMark Media is used together with the Print Security Suite to convert a generic Fargo Printer to a SecureMark Printer. After this conversion, the Printer will only accept Integrator-specific SecureMark media (Ribbon). The following is the basic process for converting to SecureMark media.

a. The User installs the Print Security Suite.

b. The CD Installation process prompts the User to launch the Print Security Suite.

c. The Print Security Suite detects the SecureMark Media installed in the Printer and prompts the User to convert the Printer to be SecureMark enabled.

d. The SecureMark conversion is completed and only Integrator specific SecureMark media will work in this Printer.