Troubleshooting and Warnings!

Unit fails to accept a new user/duress card	• Ensure the User ID assigned is between 0 and 986 for users • Ensure the user card is not already assigned to another user
Unit fails to respond to a programmed user card	• Ensure the unit is in standby mode by pressing the [*] key until the LED becomes steady red

⚠ WARNING!

- **INGESTION HAZARD:** This product contains a button cell or coin battery.
- **DEATH** or serious injury can occur if ingested.
- A swallowed button cell or coin battery can cause **Internal Chemical Burns** in as little as **2 hours**.
- **KEEP** new and used batteries **OUT OF REACH of CHILDREN**.
- **Seek immediate medical attention** if a battery is suspected to be swallowed or inserted inside any part of the body.

- Remove and immediately recycle or dispose of used batteries according to local regulations and keep away from children. Do NOT dispose of batteries in household trash or incinerate.
- Even used batteries may cause severe injury or death.
- Call a local poison control center for treatment information.
- The compatible battery type: CR2025
- Nominal battery voltage: 3VDC
- Non-rechargeable batteries are not to be recharged.
- Do not force discharge, recharge, disassemble, heat above 158° F (70° C), or incinerate. Doing so may result in injury due to venting, leakage, or explosion resulting in chemical burns.
- Ensure the batteries are installed correctly according to polarity (+ and –).
- Do not mix old and new batteries, different brands or types of batteries, such as alkaline, carbon-zinc, or rechargeable batteries.
- Remove and immediately recycle or dispose of batteries from equipment not used for an extended period of time according to local regulations.
- Always completely secure the battery compartment. If the battery compartment does not close securely, stop using the product, remove the batteries, and keep them away from children.

FCC COMPLIANCE STATEMENT **FCC ID: K4EPR3125PQ**

THIS DEVICE COMPLIES WITH PART 15 OF THE FCC RULES. OPERATION IS SUBJECT TO THE FOLLOWING TWO CONDITIONS: (1) THIS DEVICE MAY NOT CAUSE HARMFUL INTERFERENCE AND (2) THIS DEVICE MUST ACCEPT ANY INTERFERENCE RECEIVED, INCLUDING INTERFERENCE THAT MAY CAUSE UNDESIRED OPERATION.

Notice: The changes or modifications not expressly approved by the party responsible for compliance could void the user's authority to operate the equipment.

IMPORTANT NOTE: To comply with the FCC RF exposure compliance requirements, no change to the antenna or the device is permitted. Any change to the antenna or the device could result in the device exceeding the RF exposure requirements and void user's authority to operate the device.

IMPORTANT WARNING: For a weather-resistant installation, ensure that the unit is installed in a waterproof back box, and that the faceplate and faceplate screws are properly sealed. Incorrect mounting may lead to exposure to rain or moisture inside which could cause a dangerous electric shock, damage the device, and void the warranty. Users and installers are responsible for ensuring that this product is properly installed and sealed.

IMPORTANT: Users and installers of this product are responsible for ensuring that the installation and configuration of this product complies with all national, state, and local laws and codes. SECO-LARM will not be held responsible for the use of this product in violation of any current laws or codes.

California Proposition 65 Warning: These products may contain chemicals which are known to the State of California to cause cancer and birth defects or other reproductive harm. For more information, go to www.P65Warnings.ca.gov.

WARRANTY: This SECO-LARM product is warranted against defects in material and workmanship while used in normal service for one (1) year from the date of sale to the original customer. SECO-LARM's obligation is limited to the repair or replacement of any defective part if the unit is returned, transportation prepaid, to SECO-LARM. This Warranty is void if damage is caused by or attributed to acts of God, physical or electrical misuse or abuse, neglect, repair or alteration, improper or abnormal usage, or faulty installation, or if for any other reason SECO-LARM determines that such equipment is not operating properly as a result of causes other than defects in material and workmanship. The sole obligation of SECO-LARM and the purchaser's exclusive remedy, shall be limited to the replacement or repair only, at SECO-LARM's option. In no event shall SECO-LARM be liable for any special, collateral, incidental, or consequential personal or property damage of any kind to the purchaser or anyone else.

NOTICE: The SECO-LARM policy is one of continual development and improvement. For that reason, SECO-LARM reserves the right to change specifications without notice. SECO-LARM is also not responsible for misprints. All trademarks are the property of SECO-LARM U.S.A., Inc. or their respective owners. Copyright © 2024 SECO-LARM U.S.A., Inc. All rights reserved.

SECO-LARM® U.S.A., Inc.
16842 Millikan Avenue, Irvine, CA 92606 Website: www.seco-larm.com
Phone: (949) 261-2999 | (800) 662-0800 Email: sales@seco-larm.com

PICSN8

MI_PR-312x-PQ_240808.docx

ENFORCER®

Stand-Alone / Wiegand Proximity Readers

Installation Manual

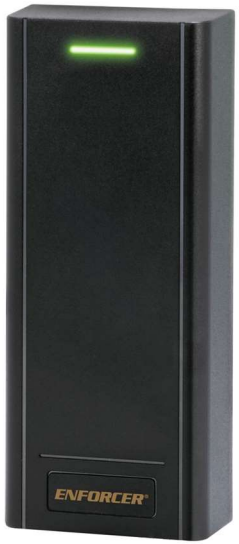

PR-3123-PQ shown

Model	Voltage
PR-3123-PQ	12~18 VDC
PR-3125-PQ	

The ENFORCER Stand-alone / Wiegand proximity reader is an advanced security solution that offers both efficiency and convenience. This versatile device can function as a stand-alone controller or a Wiegand reader. The reader's unique feature of adding multiple cards in bulk at once significantly streamlines access control management in large organizations.

- 12~18 VDC Operation
- Low current draw – 120mA max.
- Form C relay output – 2A@12VDC
- Built-in tamper alarm and external alarm output
- Outdoor rated – IP66 weatherproof
- Can serve as Wiegand output reader or controller, output and input – 26~44 bits
- EM 125kHz Proximity card reader
- 2-Door interlock
- Easy duplication of users to additional devices
- Bulk adding of multiple cards at a time

SECO-LARM®

Parts List

1x **Proximity reader**
1x **Master card**
1x **Diode**
2x **Mounting screws**
10x **User proximity cards***
1x **Security star wrench**
2x **Plastic screw anchors**
1x **Infrared programmer**
1x **Manual**

*Additional Cards / Key fobs are sold separately (pg. 19)

Specifications

Model		PR-3123-PQ	PR-3125-PQ
Operating voltage		12~18 VDC	
Current draw	Standby	50mA@12VDC	
	Active	120mA@12VDC (max.)	
Outputs	Form C	2A@12VDC	
	Alarm	2A@12VDC	
	Wiegand	26~44 bits	
Inputs	Wiegand	26~44 bits, PIN input – 4, 8, or 10 bits	
	Egress	N.O. Ground	
	Door sensor	N.C. Ground	
Card type		EM125	
Enclosure material		Black ABS plastic	
Operating temperature		-40°~140° F (-40°~60° C)	
Operating humidity		0~98% non-condensing	
Dimensions		$1^{7}/_{8}$"x$4^{5}/_{8}$"x$^{13}/_{16}$" (48x117x20 mm)	$2^{15}/_{16}$"x$4^{5}/_{8}$"x$^{13}/_{16}$" (75x117x20 mm)
Weight		5-oz (140g)	7-oz (200g)

Overview

PR-3123-PQ

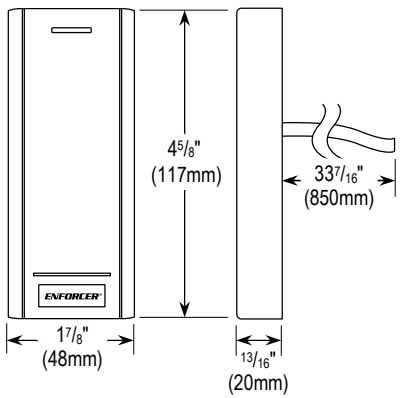

PR-3125-PQ

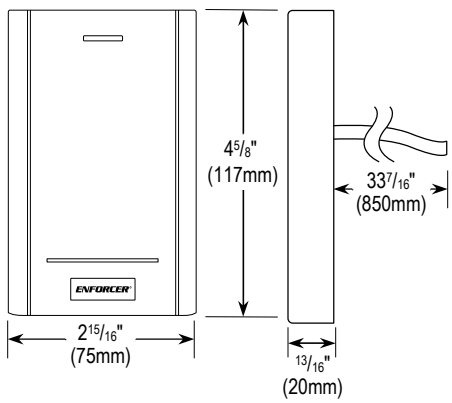

Resetting the Reader to Factory Default

When resetting to factory default, user information is retained. You may also program a new Master Card if it is lost. To reset the reader to factory default settings, follow steps 1~4 below.

1. Power off the reader.
2. Hold down the egress (Request-to-Exit, RTE) button and power the reader on, continuing to hold down the egress button until you hear 2 beeps and the LED turns orange.

   NOTE: If no egress button is installed, use a small jumper wire to momentarily connect the yellow and black wires.

3. Release the egress button.
4. If you only need to reset the reader to factory default, wait until the LED changes to red (about 30 seconds) indicating that the reset has completed successfully.
5. If you need to program a new Master Card, within 30 seconds, read the new card. The LED will change to red indicating that the reset has completed successfully.

User Operation of the Reader

- Present the valid proximity card to activate the relay.
- You should hear 1 beep (if sounds are enabled) and the status LED should turn green to indicate that the user card is accepted, and the door is unlocked.
- Present the proximity card to silence an alarm (except for duress alarms).

Accessories

Proximity Key fobs

PR-K1K1-AQ

Proximity Cards

PR-K1S1-A

Setting Up the Wiegand Reader Mode

The reader can work as a standard Wiegand reader with a controller. Be sure to set the reader operation mode to Wiegand reader mode.

1. Enter programming mode: [*] (master code) [#]
2. Wiegand reader mode: [7][8][#]
3. Exit programming mode: [*]

Connect the reader and controller as in the diagram in Fig. 3.

Fig. 3

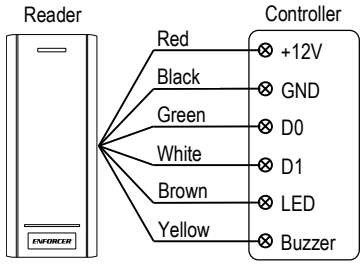

NOTES:

- Nearly all settings in controller mode will be invalid.
- The brown wire will be redefined to control the LED. When its voltage is low, the LED will become green.
- The yellow wire will be redefined to control the internal buzzer. When its voltage is low, the buzzer will sound.

Wiegand Output Bits / Format

Set the Wiegand output bits/format according to the input format of the controller.

1. Enter programming mode: [*] (master code) [#]
2. Set output format: [8] (26~44) [#] [default: 26]
3. Disable parity bits: [8][0]

   OR

   Enable parity bits: [8][1][#] [default]
4. Exit programming mode: [*]

Mounting Diagram

PR-3125-PQ shown, PR-3123-PQ is similar in layout

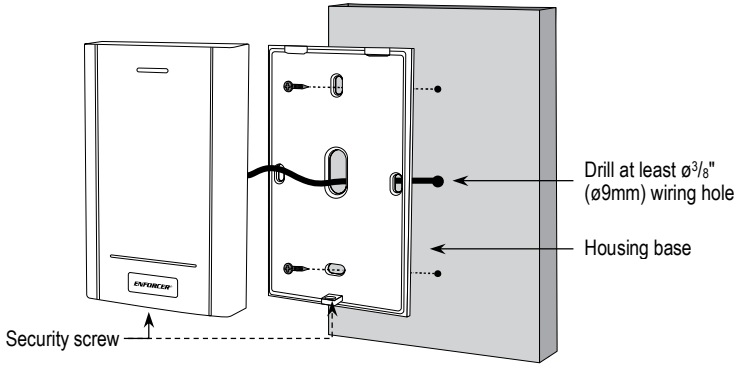

Quick Install Guide

For experienced installers looking to do a basic installation and programming of the reader, but for in-depth installation and programming instructions, see *Table of Contents* on pg. 5

Quick Wiring Guide

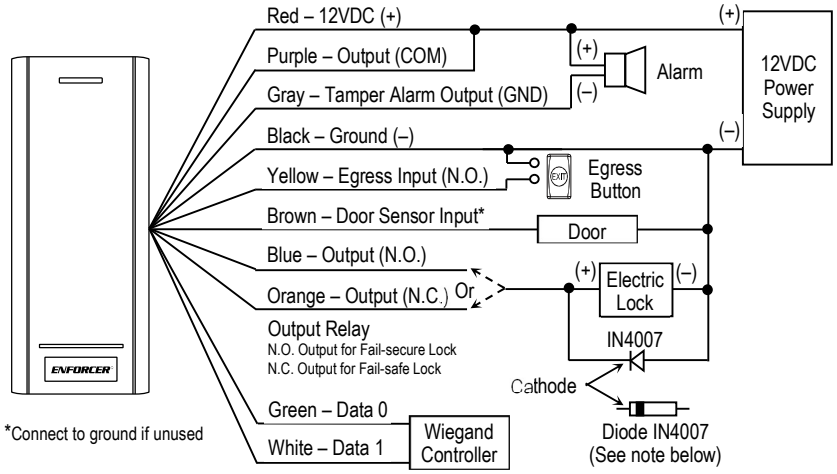

NOTE: To protect the relay, you must install the enclosed diode—with the cathode (striped end) toward the positive side—for DC powered locks **OR** install the varistor (MOV, not supplied) for AC powered locks and for electromagnetic locks ***unless*** *your lock has a diode/MOV built in* (all SECO-LARM electromagnetic locks have built-in protection). Do not install both diode and MOV. Failure to use these as directed will void the warranty.

Quick Install Guide (Continued)

Programming Tips

- All programming is done using the included infrared programmer or Master card.
- Master programming code (6 digits) should be programmed before any other programming.
- A steady red LED indicates that the reader is powered on and ready. The LED will change to flashing red and a single beep will sound to indicate the device has entered programming mode.
- **Do not disconnect the reader from power while in programming mode.** Doing so may cause a memory error.
- Note that, in programming instructions, programming entry actions or options other than specific keystrokes are enclosed within the parentheses, while factory defaults are enclosed within square brackets.

Quick Programming Instructions

Follow the instructions below if the following covers your needs:

- Programming a new master code
- Programming a user card to the first available ID
- Set the output time

1. Enter base programming mode: [*] [1][2][3][4][5][6] [#]

   NOTE: [1][2][3][4][5][6] this is the factory default master programming code.

2. Set the new master programming code (6 digits):

   [0] (the new master code) [#] (repeat the new master code) [#]

   NOTE: The master code must be 6 digits and not the same as any code.

3. Set a user card to operate the output (unlock the door): [1] (read card) [#]

   NOTE: Cards can be added repeatedly in succession.

4. Set the output time (skip this step if the default value of 5 seconds is acceptable): [3] (1~99) [#]

   NOTE: The delay time is 1~99 seconds

5. Exit programming mode: [*]

   NOTE: One short beep indicates that the reader has exited programming mode.

Setting up the Wiegand Controller Mode

The reader can work as a controller connected to a Wiegand reader.

Wiegand Controller Mode Wiring Diagram

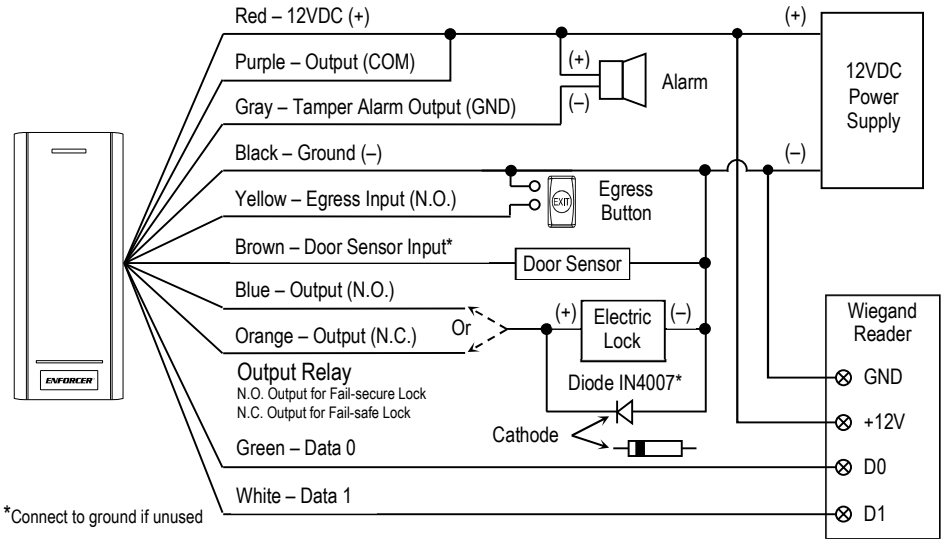

NOTE: To protect the relay, you must install the enclosed diode—with the cathode (striped end) toward the positive side—for DC powered locks **OR** install a varistor (MOV, not supplied) for AC powered locks and for electromagnetic locks ***unless*** *your lock has a diode/MOV built in* (all SECO-LARM electromagnetic locks have protection built-in). Do not install both diode and MOV. Failure to use as directed will void the warranty.

Wiegand Input Format

1. Enter programming mode: [*] (master code) [#]
2. Set input format: [8] (26~44) [#] [default: 26]
3. Disable parity bit: [8][0][#]

   OR

   Enable parity bit: [8][1][#] [default]
4. Exit programming mode: [*]

PIN Input Bits

1. Enter programming mode: [*] (master code) [#]
2. Set PIN input bits: [8] (4 or 8 or 10) [#] [default: 4 bits]
3. Exit programming mode: [*]

NOTE: Basic programming is the same as in the stand-alone mode.

Duplicating Users to Another Reader

User data can be duplicated from one reader to another reader that supports this function. All user data will be transferred to the second unit (taking about 3 minutes for 1,000 users), overwriting any existing user data.

Fig. 2

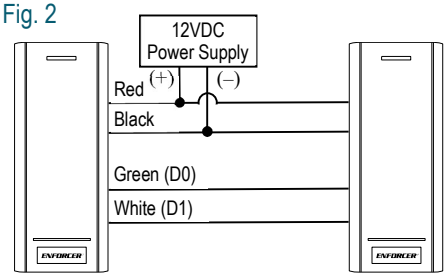

Connect the readers in parallel as shown in Fig. 2, all wires to the same corresponding color.

Make sure that both readers have the same master programming code. To transfer user data, use the following general formula on the main reader containing the user data.

1. Enter programming mode: [*] (master code) [#]
2. Set transferring: [9][8][#]

   Within 30 seconds the LED turns green. When the transfer is complete 1 beep will sound and the LED will turn red.
3. Exit programming mode: [*]

NOTES:

- Both readers must support the data transfer function and have the same master programming code.
- Any user data existing on the second device will be overwritten.

Table of Contents

Parts List **2**
Specifications **2**
Overview **2**
Mounting Diagram **3**
Quick Install Guide **3**
Quick Wiring Guide 3
Programming Tips 4
Quick Programming Instructions 4
Important Notes **5**
LED Indicators and Device Sounds **6**
Wiring Chart **6**
Installation **6**
Programming Functions and Defaults **7**
Initial Programming Steps **7**
Programming Tips 7
Enter and Exit Base Programming Mode 8
Programming the Master Code 8
Setting the Reader Operation Mode 8
Programming the Access Mode 8
Adding Users **9**
User Types, ID Numbers, PIN Codes 9
Adding a Card User 9
Adding a PIN User 9
Adding a Card + PIN User 10
Changing the PIN Number for Card + PIN Users ... 10
Adding Duress Users 10
Adding a Super User 11
Adding a Visitor User 11
Deleting Users **11**
Adding/Deleting Users with the Master Card **12**
Add Card/PIN User 12
Delete Card/PIN User 12
Programming the Output Mode and Duration **12**
Programming Notification Sounds and LED **12**
Programming the External Alarm Output **13**
Programming Wrong Card/PIN Lockout/Alarm **13**
Door-Left-Open Warning **14**
Programming Door-Forced-Open Alarm **14**
Card Collection Mode **14**
Setting Up a Two-Door Interlock System with Two Readers **15**
Two-Door Interlock System Wiring Diagram 15
Programming the Interlock System 15
Duplicating Users to Another Reader **16**
Setting up the Wiegand Controller Mode **17**
Wiegand Controller Mode Wiring Diagram 17
Wiegand Input Format 17
PIN Input Bits 17
Setting Up the Wiegand Reader Mode **18**
Wiegand Output Bits / Format 18
Resetting the Reader to Factory Default **19**
User Operation of the Reader **19**
Accessories **19**
Troubleshooting and Warnings! **20**

Important Notes

IF USING THE READER WITH A MECHANICALLY OPERATED DOOR OR GATE, MOUNT THE UNIT AT LEAST 15' (5m) FROM THE DOOR OR GATE TO PREVENT USERS FROM BEING CRUSHED OR PINNED. FAILURE TO DO SO MAY RESULT IN SERIOUS INJURY OR DEATH.

1. Always disconnect the power before servicing the reader. Do not apply power until all connection wiring is completed.
2. The reader must be properly grounded. Use a minimum 22AWG wire connected to the common ground wire. Failure to do so may damage the unit.
3. All wiring and programming should be done by a professional installer to reduce the risk of improper installation.
4. The user's operating guide for this reader is located on pg. 19 of this manual. Be sure to store this manual in a safe place for future reference.

LED Indicators and Device Sounds

Status	Sounds	LED
Power on in standby mode	–	Red steady
In base programming mode	1 Beep	Red flashing
In function programming mode	1 Beep	Orange steady
Exit programming mode	1 Beep	Red steady
Successful operation	1 Beep	Green flash once
Unsuccessful operation	3 Beep	Red flashes 3 times
Built-in alarm	Rapid beeping*	Red flashing rapidly

*De-activate the built-in alarm by entering a valid master or user credential (card or PIN).

Wiring Chart

Color	Function	Description
Red	Power (+)	Connect to +12VDC power supply
Black	Ground (-)	Connect to Ground
Yellow	Egress Input	N.O. Pushbutton contact to the ground. Press the button to activate the output
Brown	Door Sensor	Connect to a magnetic contact or door sensor (connect to the ground if unused)
Blue	Output N.O.	NO/NC/COM, relay output, max. 2A@12VDC
Purple	Output COM	
Orange	Output N.C.	
Gray	Alarm Output	Transistor ground output, max. 2A@12VDC
Green	Data 0	Wiegand controller
White	Data 1	Wiegand controller

NOTE: To protect the relay, you must install the enclosed diode—with the cathode (striped end) toward the positive side—for DC-powered locks **OR** a varistor (MOV, not supplied) for AC-powered locks and for electromagnetic locks ***unless*** *your lock has a diode/MOV built in* (all SECO-LARM electromagnetic locks have built-in protection). Do not install both diode and MOV. Failure to use these as directed will void the warranty.

Installation

1. Find a suitable location at a height convenient to most users.
2. Remove the security screw from the bottom of the device.
3. Insert a small screwdriver or other flat object into the slot at the top rear of the reader and gently pry the reader from the base.
4. Using the housing base as a template, mark the holes needed for the wiring and mounting screws and drill the needed holes (Fig. 1). Ensure that the wiring hole is large enough to allow the wiring to be pushed in without crimping.

Fig. 1

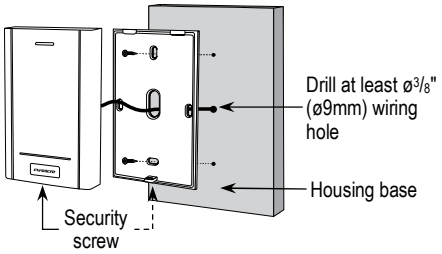

Setting Up a Two-Door Interlock System with Two Readers

In this application, two of the same series of readers are each connected to separate door locks and egress pushbuttons. While one door is open, the other cannot be opened.

Two-Door Interlock System Wiring Diagram

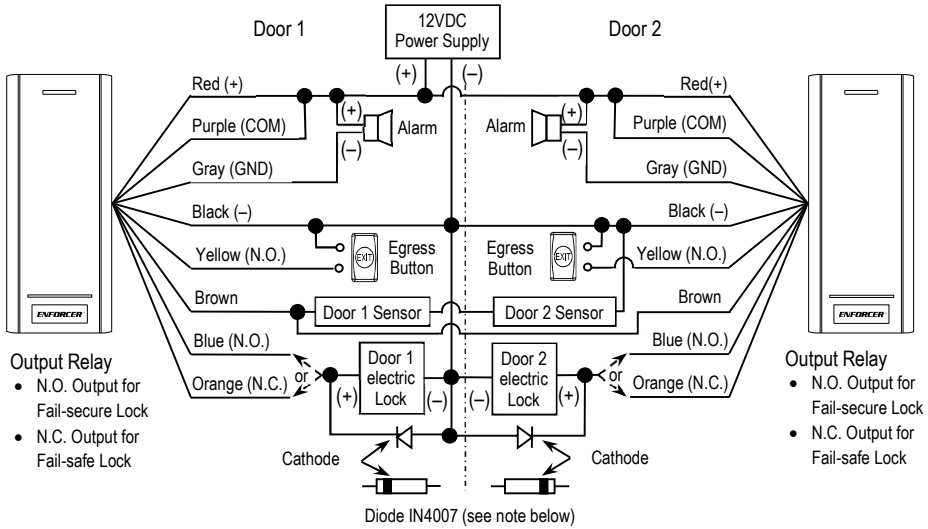

NOTE: To protect the relay, you must install the enclosed diode—with the cathode (striped end) toward the positive side—for DC powered locks **OR** install a varistor (MOV, not supplied) for AC powered locks and for electromagnetic locks ***unless*** *your lock has a diode/MOV built in* (all SECO-LARM electromagnetic locks have built-in protection). Do not install both diode and MOV. Failure to use these as directed will void the warranty.

Programming the Interlock System

1. Enter programming mode: [*] (master code) [#]

   Disable: [9] [0] [#] [default]

   OR

   Enable: [9] [1] [#]
2. Exit programming mode: [*]

NOTE: While you may wish to do so for convenience, it is not necessary for the two readers to have the same master codes.

Door-Left-Open Warning

If used with a magnetic contact (not included) on the door or with a lock with a built-in sensor, and the door is left open longer than 1 minute, the reader's internal notification (if enabled, see *Programming Notification Sounds and LED*, pg. 12) will sound and the external alarm according to its settings (see *Programming the External Alarm Output*, pg. 13) as a reminder.

To stop the notification, either close the door, enter the master code, swipe a master card, or other valid user card/PIN.

Programming Door-Forced-Open Alarm

This feature requires a magnetic contact (not included) or a lock with a built-in sensor connected to the brown wire.

1. Enter programming mode: [*] (master code) [#]

   Disable: [6][3][#] [default]

   OR

   Enable: [6][4][#]

   NOTE: The alarm duration follows the overall setting (see *Programming the External Alarm Output*, pg. 13).
2. Exit programming mode: [*]

Card Collection Mode

This could be convenient if you want to pass out cards to your staff as they enter for the day. As they swipe their card, not only would the door unlock, their card would be assigned the next available User ID. It is important that each card # is recorded with its owner in case the card is lost. This option is *not* recommended if it is necessary to record user IDs since it would be impossible to know what ID is being assigned to each user/card (see note under *Adding Users*, pg. 9).

1. Enter programming mode: [*] (master code) [#]
2. Disable: [9][2][#] [default]

   OR

   Enable: [9][3][#]
3. Exit program mode: [*]

IMPORTANT WARNING

- While *Card Collection Mode* is enabled, ***any card*** will trigger the relay *and* will be entered into the system as a user.
- Therefore, ***it is crucial to remember to disable this mode after initial programming is completed***.

Installation (Continued)

5. Run the wiring through the wall to the wiring hole in the wall and carefully push the wires through the hole in the wall and through the hole in the base.
6. Install the base using the included mounting screws and mounting screw anchors (if necessary). Ensure the correct orientation as shown in Fig. 1 on pg. 6.
7. Connect all wires according to the *Wiring Chart* on pg. 6.
8. Reattach the reader to the base pressing until you hear a click securing the reader to the base.
9. Reinstall the security screw to secure the installation.

Programming Functions and Defaults

Function Code	Description	Basic Formula	Default Values	Pg. #
0	Master code	0 (master code) # (master code) #	[123456]	8
1	Add users (all types)*	1 (user card / PIN) #	N/A	9~11
2	Delete users (all types)*	2 (user card / PIN) #	N/A	11
3	Output mode/duration	3 (1~99) #	[5] Momentary, 5 seconds	12
4	Access mode	4 (0~3) # OR 4 3 (2~9)†	[3] Card or PIN	8
5	External alarm/duration	5 (0~3) #	[1] On, 1 minute	13
6	Wrong-card/PIN lockout	6 (0~2) #	[0] Disabled	13
6	Door-forced-open alarm	6 (3~4) #	[3] Disabled	14
7	Sounds	7 (0 or 1) #	[1] ON	12
7	LED	7 (2 or 3) #	[3] ON	12
7	Operation mode	7 (7 or 8) #	[7] Stand-alone / controller	8
8	Wiegand format	8 (26~44) #	[26]	17~18
8	Wiegand input bits	8 (4 or 8 or 10) #	[4]	
8	Wiegand parity bit	8 (0 or 1) #	[1] Enabled	
9	Two-door interlock	9 (0 or 1) #	[0] Disabled	15
9	Duplicate data	9 8 #	N/A	16
9	Card collection mode	9 (2 or 3) #	[2] Disabled	14

*See also pg. 12, pg. 14. †The second option is for multi-users.

Initial Programming Steps

Programming Tips

- All programming is done using the included infrared programmer or the Master card.
- Master programming code (6 digits) should be programmed before any other programming.
- A steady red LED indicates that the reader is powered on and ready. The LED will change to flashing red and a single beep will sound to indicate the device has entered programming mode.
- **Do not disconnect the reader from power while in programming mode.** Doing so may cause a memory error.
- Note that, in programming instructions, programming entry actions or options other than specific keystrokes are enclosed within the parentheses, while factory defaults are enclosed within square brackets.

Initial Programming Steps (Continued)

Enter and Exit Base Programming Mode

Enter programming mode: [*] (*master code*) [#]

NOTE: The factory default master code is 123456.

Programming the Master Code

1. Enter programming mode: [*] (master code) [#]

   NOTE: The master code factory default is 123456.
2. Set the new master code: [0] (new master code) [#] (repeat the new master code) [#]

   NOTE: The master code must be 6 digits.
3. Exit programming mode: [*]

Setting the Reader Operation Mode

1. Enter programming mode: [*] (master code) [#]
2. Standalone/Controller mode: [7][7][#] [default]

   OR

   Wiegand Reader mode: [7][8][#]
3. Exit programming mode: [*]

Programming the Access Mode

1. Enter programming mode: [*] (master code) [#]
2. Card Access: [4][0][#]

   OR

   Pin Access: [4][1][#] **NOTE:** PIN access requires use of the infrared programmer.

   OR

   Card + PIN access: [4][2][#] **NOTE:** see pg. 10 for details.

   OR

   Card or PIN access: [4][3][#] [default]

   OR

   Multi-User access: [4][3] (2~9) [#]

   NOTES

   - Where 2~9 is the number of users required in order to gain access.
   - In multi-user mode, the elapsed time between each user input must not exceed 5 seconds, otherwise the device will return to standby, and the process must start again.
3. Exit programming mode: [*]

Programming the External Alarm Output

When the reader is programmed in stand-alone mode, the external alarm is triggered by the *tamper* alarm, *duress* alarm, and, if enabled, by the *wrong-card* alarm, *door-left-open* alarm, and *door-forced-open* alarm.

1. Enter programming mode: [*] (master code) [#]
2. OFF: [5][0][#]

   OR
3. ON and set duration: [5] (1~3) [#] **NOTE:** Where 1~3 is minutes, duration [default: ON, 1 min]

NOTE: When the alarm is triggered, it can be disabled by any of the following:

- (Master code) [#]
- Scanning the master card
- Scanning any valid user card
- Entering any valid user PIN

Programming Wrong Card/PIN Lockout/Alarm

This setting tells the reader what to do after 10 failed card/PIN attempts. [Default OFF]

1. Enter programming mode: [*] (master code) [#]
2. Lockout OFF: [6][0][#] [default]

   OR

   Lockout ON:[6][1][#]

   NOTE: This locks the reader for 10 minutes when triggered and cannot be disabled for the duration.

   OR

   Lockout ON with Alarm: [6][2][#]

   NOTE: The alarm duration will follow the global alarm settings, duration [default: 1 min]. However, if the global settings are set to OFF (i.e. duration: 0), those settings will override this and the alarm will not sound (see *Programming the External Alarm Output*, pg. 13)
3. Exit programming mode: [*]

Adding/Deleting Users with the Master Card

The Master Card offers another way to add or delete users without the master code. Not recommended if you are recording user IDs since users will be assigned the next available ID.

Add Card/PIN User

1. Scan master card.
2. Scan user card
   OR:
   (PIN) [#]
3. Repeat step 2 for additional users.
4. Scan master card again to complete.

Delete Card/PIN User

1. Scan master card twice within 5 seconds.
2. Scan user card
   OR:
   (PIN) [#]
3. Repeat step 2 for additional users.
4. Scan master card again to complete.

Programming the Output Mode and Duration

1. Enter programming mode: [*] (master code) [#]
2. Momentary output mode: [3] (1~99) [#] **NOTE:** Duration is 1~99 seconds [default: 5 seconds].
   OR
   Toggle mode: [3][0][#]
3. Exit programming mode: [*]

Programming Notification Sounds and LED

1. Enter programming mode: [*] (master code) [#]
2. Sound OFF: [7][0][#]
   OR
   Sound ON: [7][1][#] [default]
   NOTE: Notification sounds refer only to the reader's sounds (including card entry, door-left-open, wrong-code) and not the external alarm.
3. LED OFF: [7][2][#]
   OR
   LED ON: [7][3][#] [default]
4. Exit programming mode: [*]

Adding Users

User Types, ID Numbers, PIN Codes

User Type	ID Numbers Available
User ID	0~986
Super user ID	987
Duress user ID	988~989
Visitor user ID	990~999

Users are also assigned a PIN of 4~6 digits (Except [8][8][8][8], which may not be used).

IMPORTANT: It is important to record each user's **card #** (recommended if available) **or user ID** as one of those will be necessary to modify or delete the card should it be lost.

Adding a Card User

1. Enter programming mode: [*] (master code) [#]
2. There are several options for adding cards.
   a. Add card using Auto ID: [1] (read card) [#]
      NOTE: Additional cards can be added in succession.
   OR
   b. Add card using specific ID: [1] (user ID) [#] (read card) [#]
      NOTE: User ID, any number 0~986
   OR
   c. Add card by card number: [1] (8 or 10 digit card number) [#]
   OR
   d. Add card by block adding: [1] (user ID) [#] (card quantity) [#] (the 1st card's number) [#]
   NOTES:
   - Use any option except *b* or *d* above with caution if you want to record user IDs, since cards will be assigned the next available user ID.
   - It may take up to 2 minutes to program using block add method (*d*).
   - When using ENFORCER proximity cards, use the 8-digit number when adding user cards by card number (*c*) or block adding (*d*).
3. Exit programming mode: [*]

Adding a PIN User

1. Enter programming mode: [*] (master code) [#]
2. Add PIN using Auto ID: [1] (PIN) [#]
   NOTE: PIN: 4~6 digits. Not recommended if you want to record user IDs since PINs will be assigned the next available user ID. Additional PINs can be added in succession.
3. Add PIN using specific ID: [1] (user ID) [#] (PIN) [#] **NOTE:** user ID: any number 0~986
4. Exit programming mode: [*]

NOTE: PIN users must use infrared programmer.

Adding Users (Continued)

Adding a Card + PIN User

This option requires that you have already chosen the "card + PIN access" option as the access mode earlier (See *Programming the Access Mode*, pg. 8) and all users must use the same mode.

NOTE: During this programming, all cards will be assigned the same PIN [default: 8888]. The PIN for any card can be changed later as will be shown below

1. Enter programming mode: [*] (master code) [#]
2. Add card: [1] (read card) [#]

   OR

   [1] (user ID) [#] (read card) [#] **NOTE:** User ID: 0~986
3. Exit programming mode: [*]

Changing the PIN Number for Card + PIN Users

To change a PIN number for Card + PIN users, be sure you are ***not*** in programming mode.

[*] (read card) (old PIN) [#] (new PIN) [#] (repeat new PIN) [#] [factory default old PIN: 8888]

OR

[*](User ID) (old PIN) [#] (new PIN) [#] (repeat new PIN) [#] [factory default old PIN: 8888]

Adding Duress Users

A Duress user ID (limited to 988 and 989) will unlock the door but also trigger an external alarm connected to the gray wire.

NOTES:

- The alarm will continue for the duration of the set alarm time (see *Programming the External Alarm Output*, pg. 13) and cannot be silenced before the time is up.
- There will be no warning sound or other indication on the reader.

1. Enter programming mode: [*] (master code) [#]
2. Add card: [1] (988 or 989) [#] (8 or 10-digit card number or read card) [#]

   NOTE: When entering ENFORCER proximity card numbers, use the 8-digit number.

   OR

   Add PIN: [1] (988 or 989) [#] (PIN) [#] **NOTE:** PIN: 4~6 digits
3. Exit programming mode: [*]

Adding Users (Continued)

Adding a Super User

When the Super User (ID limited to 987) card/PIN is used, this will unlock the door and momentarily deactivate the reader for all other users. The Super User card/PIN must be entered again to restore the functionality of other users.

1. Enter programming mode: [*] (master code) [#]
2. Add card: [1] [9][8][7] [#] (8 or 10-digit card number or read card) [#]

   NOTE: When entering ENFORCER proximity card numbers, use the 8-digit number.

   OR

   Add PIN: [1] [9][8][7] [#] (PIN) [#] **NOTE:** PIN: 4~6 digits
3. Exit programming mode: [*]

Adding a Visitor User

Visitor Users (IDs limited to 990~999) are allowed temporary access from 1~10 times.

1. Enter programming mode: [*] (master code) [#]
2. Add Card: [1] (990~999) [#] (0~9) [#] (8 or 10-digit card number or read card) [#]

   NOTE: When entering ENFORCER proximity card numbers, use the 8-digit number.

   OR

   Add PIN: [1] (990~999) [#] (0~9) [#] (PIN) [#] **NOTE:** PIN: 4~6 digits

   NOTE: The 0~9 above represents the number of times allowed and 0 represents 10 times.
3. Exit programming mode: [*]

Deleting Users

1. Enter programming mode: [*] (master code) [#]
2. Delete by User ID: [2] (user ID) [#]

   OR

   Delete by Card: [2] (read card) [#]

   OR

   Delete by Card Number: [2] (8 or 10-digit card number) [#]

   OR

   Delete by PIN: [2] (PIN) [#]

   OR

   Delete all users: [2] (master code) [#]
3. Exit programming mode: [*]

FCC STATEMENT :

This device complies with Part 15 of the FCC Rules. Operation is subject to the following two conditions:
(1) This device may not cause harmful interference, and
(2) This device must accept any interference received, including interference that may cause undesired operation.
Warning: Changes or modifications not expressly approved by the party responsible for compliance could void the user's authority to operate the equipment.

NOTE: This equipment has been tested and found to comply with the limits for a Class B digital device, pursuant to Part 15 of the FCC Rules. These limits are designed to provide reasonable protection against harmful interference in a residential installation. This equipment generates uses and can radiate radio frequency energy and, if not installed and used in accordance with the instructions, may cause harmful interference to radio communications. However, there is no guarantee that interference will not occur in a particular installation. If this equipment does cause harmful interference to radio or television reception, which can be determined by turning the equipment off and on, the user is encouraged to try to correct the interference by one or more of the following measures:

Reorient or relocate the receiving antenna.

Increase the separation between the equipment and receiver.

Connect the equipment into an outlet on a circuit different from that to which the receiver is connected.

Consult the dealer or an experienced radio/TV technician for help.

FCC Radiation Exposure Statement:

This equipment complies with FCC radiation exposure limits set forth for an uncontrolled environment.