Shenzhen Huatongwei International Inspection Co., Ltd.
1/F,Bldg 3,Hongfa Hi-tech Industrial Park,Genyu Road,Tianliao,Gongming,Shenzhen,China
Phone:86-755-26748019 Fax:86-755-26748089 http://www.szhtw.com.cn

TEST REPORT

Report Reference No.....:	**TRE1809013601**	R/C…….: 63763
FCC ID ..... :	**K6630643X3D**	
IC ..... :	**511B-3064X3D**	
Applicant's name.....:	**YAESU MUSEN CO., LTD.**	
Address .....:	Tennozu Parkside Building 2-5-8 Higashi-Shinagawa, Shinagawa-ku, Tokyo 140-0002 Japan	
Manufacturer.....:	QUANZHOU QIXIANG ELECTRON SCIENCE & TECHNOLOGY CO., LTD.	
Address.....:	Wan'An Tangxi Industrial Zone, Luojiang District, Quanzhou, Fujian, China	
Test item description .....:	**25 Watt VHF/FM Marine Transceiver**	
Trade Mark .....:	STANDARD HORIZON	
Model/Type reference .....:	GX1850GPS	
Listed Model(s).....:	GX1850,GX1800GPS,GX1800	
Standard .....:	**IEC 62238**	
Date of receipt of test sample…….:	Sep. 25, 2018	
Date of testing……..:	Sep. 25, 2018- Oct. 11, 2018	
Date of issue…….:	Nov. 14, 2018	
Result ……...:	**PASS**	
Compiled by (position+printedname+signature) ..:	File administrators Fanghui Zhu	Fanghui Zhu
Supervised by (position+printedname+signature) ...:	Project Engineer Jerry Wang	Jerry Wang
Approved by (position+printedname+signature) ...:	RF Manager Hans Hu	Hans Hu
Testing Laboratory Name.....:	**Shenzhen Huatongwei International Inspection Co., Ltd**	
Address .....:	1/F, Bldg 3, Hongfa Hi-tech Industrial Park, Genyu Road, Tianliao, Gongming, Shenzhen, China	

Shenzhen Huatongwei International Inspection Co., Ltd. All rights reserved.

This publication may be reproduced in whole or in part for non-commercial purposes as long as the Shenzhen Huatongwei International Inspection Co., Ltd. is acknowledged as copyright owner and source of the material. Shenzhen Huatongwei International Inspection Co., Ltd. takes no responsibility for and will not assume liability for damages resulting from the reader's interpretation of the reproduced material due to its placement and context.

The test report merely correspond to the test sample.

Contents

1. TEST STANDARDS AND REPORT VERSION 4

1.1. Test Standards 4
1.2. Report version information 4

2. TEST DESCRIPTION 5

3. SUMMARY 7

3.1. Client Information 7
3.2. Product Description 7
3.3. Test frequency list 8
3.4. EUT operation mode 8
3.5. EUT configuration 8

4. TEST ENVIRONMENT 9

4.1. Address of the test laboratory 9
4.2. Test Facility 9
4.3. Environmental conditions 10
4.4. Statement of the measurement uncertainty 11
4.5. Equipments Used during the Test 12

5. TEST CONDITIONS AND RESULTS 13

5.1. Environmental Requirement 13
5.1.1. Vibration test 13
5.1.2. Dry heat 14
5.1.3. Damp heat 15
5.1.4. Low temperature 16
5.2. Transmitter Requirement 17
5.2.1. Frequency error 17
5.2.2. Carrier Power (Conducted) 19
5.2.3. Frequency Deviation 21
5.2.4. Sensitivity of the modulator, including microphone 24
5.2.5. Audio frequency response 26
5.2.6. Audio frequency harmonic distortion of the emission 28
5.2.7. Adjacent Channel Power 31
5.2.8. Conducted spurious emissions conveyed to the antenna 33
5.2.9. Transient frequency behaviour of the transmitter 35
5.2.10. Residual modulation of the transmitter 37
5.2.11. Frequency error (demodulated DSC signal) 38
5.2.12. Modulation index for DSC 39
5.2.13. Modulation rate for DSC 40
5.2.14. Testing of generated call sequences 41
5.3. Receiver for Radiotelephone Requirement 42
5.3.1. Harmonic distortion and rated audio frequency output power 42
5.3.2. Audio frequency response 44
5.3.3. Maximum Usable Sensitivity 46
5.3.4. Co-channel rejection 48
5.3.5. Adjacent channel selectivity 49
5.3.6. Spurious Response Rejection 51
5.3.7. Intermodulation response 52
5.3.8. Blocking or Desensitization 53
5.3.9. Conducted spurious emissions 55
5.3.10. Receiver noise and hum level 57

5.3.11. Squelch operation 58
5.3.12. Squelch hysteresis 60
5.3.13. Multiple watch characteristic 61
5.4. Receiver for DSC decoder Requirement 64
5.4.1. Maximum usable sensitivity 64
5.4.2. Co-channel rejection 65
5.4.3. Adjacent channel selectivity 66
5.4.4. Spurious response and blocking immunity 67
5.4.5. Intermodulation response 68
5.4.6. Dynamic range 69
5.4.7. Spurious emissions 70
5.4.8. Verification of correct decoding of various types of DSC calls 71
5.4.9. Reaction to VTS and AIS channel management DSC transmissions 72
5.4.10. Simultaneous reception 73

1. TEST STANDARDS AND REPORT VERSION

1.1. Test Standards

The tests were performed according to following standards:
IEC 62238:2003-Maritime navigation and radiocommunication equipment and systems –VHF radiotelephone equipment incorporating Class "D" Digital Selective Calling (DSC) – Methods of testing and required test results

1.2. Report version information

Revision No.	Date of issue	Description
N/A	2018-10-12	Original
R1	2018-10-30	Updete model name GX1860 to GX1850GPS
R2	2018-11-14	Only add to FCC ID and IC ID

2. Test Description

Environmental Requirement				
Test item		Standards requirement (IEC62238)	Result	Test Engineer
Vibration test		Sub-clause 7.4	Pass	Gaosheng Pan
Temperature tests	Dry heat	Sub-clause 7.5	Pass	Gaosheng Pan
	Damp heat	Sub-clause 7.5	Pass	Gaosheng Pan
	Low temperature	Sub-clause 7.5	Pass	Gaosheng Pan
Transmitter Requirement				
Test item		Standards requirement (IEC62238)	Result	Test Engineer
Frequency error		Sub-clause 8.1	Pass	Gaosheng Pan
Carrier power		Sub-clause 8.2	Pass	Gaosheng Pan
Frequency deviation		Sub-clause 8.3	Pass	Gaosheng Pan
Sensitivity of the modulator, including microphone		Sub-clause 8.4	Pass	Gaosheng Pan
Audio frequency response		Sub-clause 8.5	Pass	Gaosheng Pan
Audio frequency harmonic distortion of the emission		Sub-clause 8.6	Pass	Gaosheng Pan
Adjacent channel power		Sub-clause 8.7	Pass	Gaosheng Pan
Conducted spurious emissions conveyed to the antenna		Sub-clause 8.8	Pass	Gaosheng Pan
Transient frequency behaviour of the transmitter		Sub-clause 8.9	Pass	Gaosheng Pan
Residual modulation of the transmitter		Sub-clause 8.10	Pass	Gaosheng Pan
Frequency error (DSC signal)		Sub-clause 8.11	Pass	Gaosheng Pan
Modulation index for DSC		Sub-clause 8.12	Pass	Gaosheng Pan
Modulation rate for DSC		Sub-clause 8.13	Pass	Gaosheng Pan
Testing of generated call sequences		Sub-clause 8.14	Pass	Gaosheng Pan
Receiver for Radiotelephone Requirement				
Test item		Standards requirement (IEC62238)	Result	Test Engineer
Harmonic distortion and rated audio frequency output power		Sub-clause 9.1	Pass	Gaosheng Pan
Audio frequency response		Sub-clause 9.2	Pass	Gaosheng Pan
Maximum usable sensitivity		Sub-clause 9.3	Pass	Gaosheng Pan
Co-channel rejection		Sub-clause 9.4	Pass	Gaosheng Pan
Adjacent channel selectivity		Sub-clause 9.5	Pass	Gaosheng Pan
Spurious response rejection		Sub-clause 9.6	Pass	Gaosheng Pan
Intermodulation response		Sub-clause 9.7	Pass	Gaosheng Pan
Blocking or desensitization		Sub-clause 9.8	Pass	Gaosheng Pan
Spurious emissions		Sub-clause 9.9	Pass	Gaosheng Pan
Receiver residual noise level		Sub-clause 9.10	Pass	Gaosheng Pan
Squelch operation		Sub-clause 9.11	Pass	Gaosheng Pan
Squelch hysteresis		Sub-clause 9.12	Pass	Gaosheng Pan
Multiple watch characteristic		Sub-clause 9.13	Pass	Gaosheng Pan

Receiver for DSC decoder Requirement			
Test item	Standards requirement (IEC62238)	Result	Test Engineer
Maximum usable sensitivity	Sub-clause 10.1	Pass	Gaosheng Pan
Co-channel rejection	Sub-clause 10.2	Pass	Gaosheng Pan
Adjacent channel selectivity	Sub-clause 10.3	Pass	Gaosheng Pan
Spurious response and blocking immunity	Sub-clause 10.4	Pass	Gaosheng Pan
Intermodulation response	Sub-clause 10.5	Pass	Gaosheng Pan
Dynamic range	Sub-clause 10.6	Pass	Gaosheng Pan
Spurious emissions	Sub-clause 10.7	Pass	Gaosheng Pan
Verification of correct decoding of various types of DSC calls	Sub-clause 10.8	Pass	Gaosheng Pan
Reaction to VTS and AIS channel management DSC transmissions	Sub-clause 10.9	Pass	Gaosheng Pan
Simultaneous reception	Sub-clause 10.10	Pass	Gaosheng Pan

3. SUMMARY

3.1. Client Information

Applicant:	YAESU MUSEN CO., LTD.
Address:	Tennozu Parkside Building 2-5-8 Higashi-Shinagawa, Shinagawa-ku, Tokyo 140-0002 Japan
Manufacturer:	QUANZHOU QIXIANG ELECTRON SCIENCE & TECHNOLOGY CO., LTD.
Address:	Wan'An Tangxi Industrial Zone, Luojiang District, Quanzhou, Fujian, China

3.2. Product Description

Name of EUT:	25 Watt VHF/FM Marine Transceiver	
Trade mark:	STANDARD HORIZON	
Model/Type reference:	GX1850GPS	
Listed mode(s):	GX1850,GX1800GPS,GX1800	
Power supply:	DC 13.8V	
Hardware Version:	SPP01	
Software Version:	V0.00.09	
Marine Radio		
Operation Frequency Range:	TX:156.025MHz to 161.6MHz	
	RX:156.05MHz to 162MHz	
Rated Output Power:	☒ High Power: 25W (43.98dBm) ☒ Low Power 1W (30.00dBm)	
Modulation Type:	Analog Voice:	FM
	Digital Data(DSC):	FSK
Channel Separation:	Analog Voice:	25kHz
	Digital Data(DSC):	25kHz
Emission Designator:	Analog Voice:	16K0G3E
	Digital Data(DSC):	16K0G2B
Antenna Type:	External	

3.3. Test frequency list

Modulation Type	Channel Separation	Test Channel	Test Frequency (MHz)	
			TX	RX
Analog Voice	25kHz	CH_L (CH60)	156.025	160.625
		CH_M(CH16)	156.800	156.800
		CH_H(CH88)	157.425	157.425

Modulation Type	Channel Separation	Test Channel	Test Frequency (MHz)	
			TX	RX
Digital Data(DSC)	25kHz	CH_{M1} (CH70)	156.525	156.525

3.4. EUT operation mode

Test mode	Transmitting	Receiving	Power level		Analog Voice
			High	Low	25kHz
TX-AWH	√		√		√
TX-AWL	√			√	√
RX-AW		√			√

Test mode	Transmitting	Receiving	States			Digital Data(DSC)
			B	Y	B+Y	25kHz
TX-B	√		√			√
TX-Y	√			√		√
TX-(B+Y)	√				√	√
RX-DSC		√				√

√ : is operation mode.

3.5. EUT configuration

The following peripheral devices and interface cables were connected during the measurement:

● - supplied by the manufacturer

○ - supplied by the lab

○	Power Cable	Length (m) :	/
		Shield :	Unshielded
		Detachable :	Undetachable
○	Multimeter	Manufacturer :	/
		Model No. :	/

4. TEST ENVIRONMENT

4.1. Address of the test laboratory

Laboratory: Shenzhen Huatongwei International Inspection Co., Ltd.
Address: 1/F, Bldg 3, Hongfa Hi-tech Industrial Park, Genyu Road, Tianliao, Gongming, Shenzhen, China
Phone: 86-755-26748019 Fax: 86-755-26748089

4.2. Test Facility

The test facility is recognized, certified, or accredited by the following organizations:

CNAS-Lab Code: L1225

Shenzhen Huatongwei International Inspection Co., Ltd. has been assessed and proved to be in compliance with CNAS-CL01 Accreditation Criteria for Testing and Calibration Laboratories (identical to ISO/IEC17025: 2005 General Requirements) for the Competence of Testing and Calibration Laboratories.

A2LA-Lab Cert. No.: 3902.01

Shenzhen Huatongwei International Inspection Co., Ltd. EMC Laboratory has been accredited by A2LA for technical competence in the field of electrical testing, and proved to be in compliance with ISO/IEC 17025: 2005 General Requirements for the Competence of Testing and Calibration Laboratories and any additional program requirements in the identified field of testing.

FCC-Registration No.: 762235

Shenzhen Huatongwei International Inspection Co., Ltd. EMC Laboratory has been registered and fully described in a report filed with the FCC (Federal Communications Commission). The acceptance letter from the FCC is maintained in our files. Registration 762235.

IC-Registration No.: 5377B-1

Two 3m Alternate Test Site of Shenzhen Huatongwei International Inspection Co., Ltd. has been registered by Certification and Engineering Bureau of Industry Canada for the performance of radiated measurements with Registration No. 5377B-1.

ACA

Shenzhen Huatongwei International Inspection Co., Ltd. EMC Laboratory can also perform testing for the Australian C-Tick mark as a result of our A2LA accreditation.

4.3. Environmental conditions

Normal Conditon	Temperature	15 °C to 35 °C	
	Relative humidity	20 % to 75 %.	
	Voltage	☐Mains voltage	Nominal mains voltage
		☐Lead-acid battery	1.1 * the nominal voltage of the battery
		☒Other	the normal test voltage shall be that declared by the equipment provider
Extreme Conditon	Temperature	☐ –15 °C and +55 °C for equipment intended for mounting below deck	
		☒ –25 °C and +55 °C for equipment intended for mounting above deck.	
		☐ -10 °C to +55 °C for Base stations for indoor/controlled climate conditions	
	Voltage	☐Mains voltage	±10 %* the nominal mains voltage
		☐Secondary battery power sources	1,3 and 0,9 multiplied by the nominal voltage of the battery
		☒Other	For equipment using other power sources, the extreme test voltages shall be as stated by the manufacturer.

Normal Conditon	V_N=nominal Voltage	DC 13.8V
	T_N=normal Temperature	25 °C
Extreme Conditon	V_L=lower Voltage	DC 10.8V
	T_L=lower Temperature	-15 °C
	V_H=higher Voltage	DC 15.6V
	T_H=higher Temperature	55 °C

4.4. Statement of the measurement uncertainty

The data and results referenced in this document are true and accurate. The reader is cautioned that there may be errors within the calibration limits of the equipment and facilities. The measurement uncertainty was calculated for all measurements listed in this test report acc. to CISPR 16 - 4 „Specification for radio disturbance and immunity measuring apparatus and methods – Part 4: Uncertainty in EMC Measurements“ and is documented in the Shenzhen Huatongwei International Inspection Co., Ltd quality system acc. to DIN EN ISO/IEC 17025. Furthermore, component and process variability of devices similar to that tested may result in additional deviation. The manufacturer has the sole responsibility of continued compliance of the device.

Hereafter the best measurement capability for Shenzhen Huatongwei laboratory is reported:

Test Items	Measurement Uncertainty	Notes
RF frequency	25 Hz	(1)
RF power	0.55 dB	(1)
Maximum frequency deviation: within 300 Hz to 6 kHz of modulation frequency	2.6 %	(1)
Maximum frequency deviation: within 6 kHz to 25 kHz of modulation frequency	2.20 dB	(1)
Deviation limitation	3.5 %	(1)
Adjacent channel power	1.20 dB	(1)
Conducted spurious emission of transmitter	0.57 dB	(1)
Audio output power	0.25 dB	(1)
Amplitude characteristics of receiver limiter	1.20 dB	(1)
Sensitivity at 20 dB SINAD	2.60 dB	(1)
Conducted emission of receiver	1.60 dB	(1)
Two-signal measurement	2.80 dB	(1)
Three-signal measurement	2.20 dB	(1)
Radiated emission of transmitter	2.20 dB	(1)
Radiated emission of receiver	2.20 dB	(1)
Transmitter transient time	6.8 %	(1)
Transmitter transient frequency	75 Hz	(1)
Receiver desensitization (duplex operation)	0.25 dB	(1)

(1) This uncertainty represents an expanded uncertainty expressed at approximately the 95% confidence level using a coverage factor of k=1.96.

4.5. Equipments Used during the Test

RF Conducted Test						
Item	Equipment	Manufacturer	Model No.	Serial No.	Last Cal. (mm-dd-yy)	Next Cal. (mm-dd-yy)
1	Analog communication tester	HP	8920A	3813A10206	11/11/2017	11/10/2018
2	Digital communication tester	Aeroflex	3920B	1001682041	11/11/2017	11/10/2018
3	Spectrum Analyzer	R&S	FSW26	103440	11/11/2017	11/10/2018
4	Signal Generator	R&S	SML02	100507	11/11/2017	11/10/2018
5	Signal Generator	IFR	2032	203002\100	11/11/2017	11/10/2018
6	RF Cable	Chengdu E-Microwave	----	----	11/11/2017	11/10/2018
7	Attenuator	Chengdu E-Microwave	EMCAXX-10RNZ-3	----	11/11/2017	11/10/2018
8	High-Pass Filter	OCEN	OSP-HPF26300P20-LC	----	11/11/2017	11/10/2018
9	High-Pass Filter	OCEN	OSP-HPF60300P20-LC	----	11/11/2017	11/10/2018
10	RF Control Unit	Tonscend	JS0806-2	N/A	11/11/2017	11/10/2018
11	Climate Chamber	ESPEC	GPL-2	----	11/10/2017	11/09/2018
12	Variable Power Supply	GW INSTEK	GPS-3030D	012578	11/11/2017	11/10/2018

5. TEST CONDITIONS AND RESULTS

5.1. Environmental Requirement

5.1.1. Vibration test

TEST RESULTS:
Complies

Please refer to the below test data:

Frequency Error:

Operation Mode	Test conditions			Frequency Error(kHz)	Limit (KHz)	Result
	Temperature (℃)	Voltage (V)	Vibration Frequency (Hz)	CH_M		
TX-AWH	T_N	V_N	2.5~100	0.078	±1.5	Pass

Carrier power:

Operation Mode	Temperature (℃)	Voltage (V)	Vibration Frequency (Hz)	Test Channel	Measured power (dBm)	Limit (dB)	Result
TX-AWH	T_N	V_N	2.5~100	CH_M	43.19	37.78~43.98	Pass

Maximum usable sensitivity:

Operation Mode	Temperature (℃)	Voltage (V)	Vibration Frequency (Hz)	Test Channel	Measured SINAD (dB)	Limit (dB)	Result
RX-AW	T_N	V_N	2.5~100	CH_L	30.16	⩾20	Pass
				CH_M	31.53		
				CH_H	30.21		

DSC receiver:

Operation Mode	Temperature (℃)	Voltage (V)	Vibration Frequency (Hz)	Test Channel	Measured (error ratio)	Limit (error ratio)	Result
RX-DSC	T_N	V_N	2.5~100	CH_{M1}	0.003	$\leqslant 10^{-2}$	Pass

5.1.2. Dry heat

TEST RESULTS:

Complies

Please refer to the below test data:

Frequency Error:

Operation Mode	Test conditions		Frequency Error(kHz)	Limit (kHz)	Result
	Temperature(℃)	Voltage (V)	CH_M		
TX-AWH	55	V_N	0.164	±1.5	Pass

Carrier power:

Operation Mode	Temperature (℃)	Voltage (V)	Test Channel	Measured power (dBm)	Limit (dB)	Result
TX-AWH	55	V_N	CH_M	43.46	37.78~43.98	Pass

Maximum usable sensitivity:

Operation Mode	Temperature (℃)	Voltage (V)	Test Channel	Measured SINAD (dB)	Limit (dB)	Result
RX-AW	55	V_N	CH_L	32.64	⩾20	Pass
			CH_M	30.85		
			CH_H	30.67		

DSC receiver:

Operation Mode	Temperature (℃)	Voltage (V)	Test Channel	Measured (error ratio)	Limit (error ratio)	Result
RX-DSC	55	V_N	CH_{M1}	0.004	$\leqslant 10^{-2}$	Pass

5.1.3. Damp heat

TEST RESULTS:

Complies

Please refer to the below test data:

Frequency Error:

Operation Mode	Test conditions			Frequency Error(kHz)	Limit (kHz)	Result
	Temperature(℃)	Humidity(%)	Voltage (V)	CH_M		
TX-AWH	40	93	V_N	0.213	±1.5	Pass

Carrier power:

Operation Mode	Temperature(℃)	Humidity(%)	Voltage (V)	Test Channel	Measured power (dBm)	Limit (dB)	Result
TX-AWH	40	93	V_N	CH_M	43.01	37.78~43.98	Pass

Maximum usable sensitivity:

Operation Mode	Humidity(%)	Voltage (V)	Voltage (V)	Test Channel	Measured SINAD (dB)	Limit (dB)	Result
RX-AW	40	93	V_N	CH_L	30.75	⩾20	Pass
				CH_M	31.88		
				CH_H	30.69		

DSC receiver:

Operation Mode	Temperature(℃)	Humidity(%)	Voltage (V)	Test Channel	Measured (error ratio)	Limit (error ratio)	Result
RX-DSC	40	93	V_N	CH_{M1}	0.006	$\leqslant 10^{-2}$	Pass

5.1.4. Low temperature

TEST RESULTS:

Complies

Please refer to the below test data:

Frequency Error:

Operation Mode	Test conditions		Frequency Error(kHz)	Limit (kHz)	Result
	Temperature(℃)	Voltage (V)	CH_M		
TX-AWH	-15	V_N	0.186	±1.5	Pass

Carrier power:

Operation Mode	Temperature (℃)	Voltage (V)	Test Channel	Measured power (dBm)	Limit (dB)	Result
TX-AWH	-15	V_N	CH_M	42.84	37.78~43.98	Pass

Maximum usable sensitivity:

Operation Mode	Temperature (℃)	Voltage (V)	Test Channel	Measured SINAD (dB)	Limit (dB)	Result
RX-AW	-15	V_N	CH_L	31.16	⩾20	Pass
			CH_M	34.02		
			CH_H	31.58		

DSC receiver:

Operation Mode	Temperature (℃)	Voltage (V)	Test Channel	Measured (error ratio)	Limit (error ratio)
RX-DSC	-15	V_N	CH_{M1}	0.007	⩽10^{-2}

5.2. Transmitter Requirement

5.2.1. Frequency error

The frequency error is the difference between the measured carrier frequency and its nominal value.

LIMIT

IEC 62238 Sub-clause 8.1.3
The frequency error shall be within ±1,5 kHz.

TEST CONFIGURATION

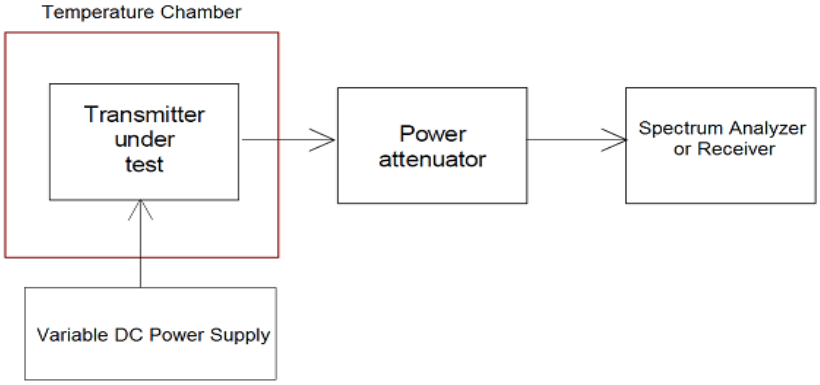

TEST PROCEDURE

1. The test conditions.
☒ normal condition ☐ Extreme conditions

2. Please refer to IEC 62238 Sub-clause 8.1.2 for the measurement method.

TEST MODE:

Please reference to the section 3.4

TEST RESULTS

☒ **Passed** ☐ **Not Applicable**

Please refer to the below test data:

Operation Mode	Test conditions		Frequency Error(kHz)			Limit (kHz)	Result
	Temperature(℃)	Voltage (V)	CH_L	CH_M	CH_H		
TX-AWH	T_N	V_N	-0.008	0.001	0.006	±1.5	Pass
	T_L	V_H	-0.009	0.001	0.007		
		V_L	-0.019	0.031	0.010		
	T_H	V_H	-0.010	0.004	0.008		
		V_L	-0.024	0.012	0.012		

Operation Mode	Test conditions		Frequency Error(kHz)			Limit (kHz)	Result
	Temperature(℃)	Voltage (V)	CH_L	CH_M	CH_H		
TX-AWL	T_N	V_N	-0.008	0.002	0.006	±1.5	Pass
	T_L	V_H	-0.010	0.004	0.009		
		V_L	-0.010	0.019	0.009		
	T_H	V_H	-0.015	0.028	0.015		
		V_L	-0.028	0.012	0.026		

5.2.2. Carrier Power (Conducted)

The carrier power is the mean power delivered to the artificial antenna during one radio frequency cycle in the absence of modulation. The rated output power is the carrier power declared by the manufacturer.

LIMIT

IEC 62238 Sub-clause 8.2.3
Normal test conditions:
The rated output power of the equipment shall be between 6 W and 25 W.
With the output power switch set at maximum, the carrier power shall be within ±1,5 dB of the rated output power under normal test conditions.The output power shall never however exceed 25 W.
With the output power switch set at minimum the carrier power shall remain between 0,1 W and 1 W.
The maximum continuous transmission time shall be between 5 min and 6 min.

Extreme test conditions:
With the output power switch set at maximum, the carrier power shall remain between 6 W and 25 W and be within +2 dB, -3 dB of the rated output power under extreme conditions. The output power shall never however exceed 25 W.
With the output power switch set at minimum the carrier power shall remain between 0,1 W and 1 W.
The maximum continuous transmission time shall be between 5 min and 6 min.

TEST CONFIGURATION

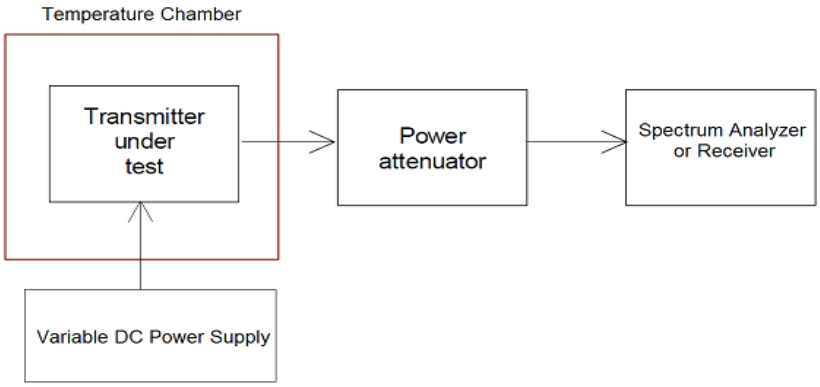

TEST PROCEDURE

1. The test conditions.
☒ normal condition ☒ Extreme conditions
2. Please refer to IEC 62238 Sub-clause 8.2.2 for the measurement method.

TEST MODE:

Please reference to the section 3.4

TEST RESULTS

☒ **Passed** ☐ **Not Applicable**

Please refer to the below test data:

Operation Mode	Temperature (℃)	Voltage (V)	Test Channel	Measured power (dBm)	Limit (dBm)	Result
TX-AWH	T_N	V_N	CH_L	43.69	42.48~43.98	Pass
			CH_M	43.69		
			CH_H	43.68		
	T_L	V_H	CH_L	43.63	40.98~43.98	
			CH_M	43.41		
			CH_H	43.39		
		V_L	CH_L	43.50		
			CH_M	43.42		
			CH_H	43.54		
	T_H	V_H	CH_L	43.48	40.98~43.98	
			CH_M	43.16		
			CH_H	43.20		
		V_L	CH_L	43.22		
			CH_M	43.34		
			CH_H	43.33		

Operation Mode	Temperature (℃)	Voltage (V)	Test Channel	Measured power (dBm)	Limit (dBm)	Result
TX-AWH	T_N	V_N	CH_L	29.36	20~30	Pass
			CH_M	29.51		
			CH_H	29.44		
	T_L	V_H	CH_L	29.20	20~30	
			CH_M	29.38		
			CH_H	29.38		
		V_L	CH_L	29.34		
			CH_M	29.43		
			CH_H	29.22		
	T_H	V_H	CH_L	29.13	20~30	
			CH_M	29.21		
			CH_H	29.21		
		V_L	CH_L	29.32		
			CH_M	29.32		
			CH_H	29.06		

5.2.3. Frequency Deviation

For the purpose of the present document, the frequency deviation is the difference between the instantaneous frequency of the modulated radio frequency signal and the carrier frequency.

LIMIT

IEC 62238 Sub-clause 8.3.3
The maximum permissible frequency deviation shall be:
25 kHz channels: ±5 kHz.
12,5 kHz channels: ±2,5 kHz.
between 3,0 kHz/2,55 kHz and 6,0 kHz: shall not exceed the frequency deviation at a modulation frequency of 3,0 kHz/2,55 kHz.
At 6,0 kHz the deviation shall be not more than 30,0 % of the maximum permissible frequency deviation.
between 6,0 kHz and a frequency equal to the channel separation for which the equipment is intended shall not exceed that given by a linear representation of the frequency deviation (dB) relative to the modulation frequency, starting at the 6,0 kHz limit and having a slope of -14,0 dB per octave.
These limits are illustrated in figure 1.

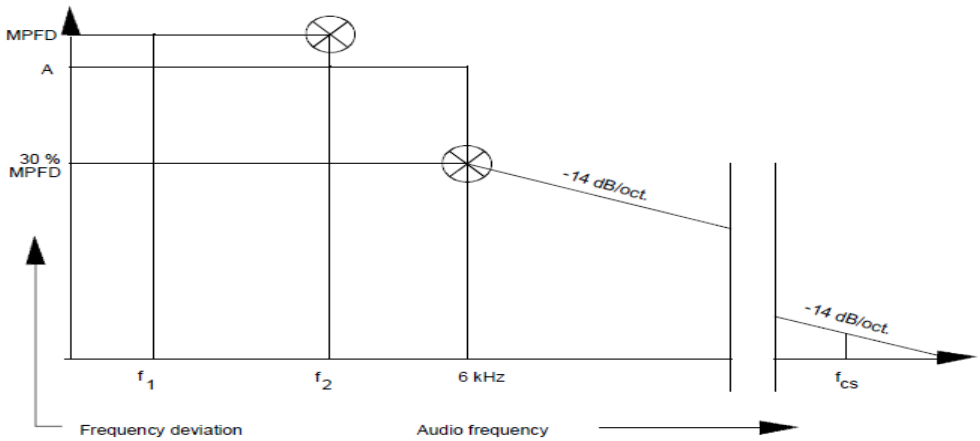

NOTE:
Abbreviations:

f_1	lowest appropriate frequency
f_2	3,0 kHz (for 25 kHz channel separation), or 2,55 kHz (for 12,5 kHz channel separation)
MPFD	Maximum Permissible Frequency Deviation, clause 8.3.2.1
A	measured frequency deviation at f2
f_{cs}	frequency equal to channel separation

Figure 1: Frequency deviation

TEST PROCEDURE

1. The test conditions.
☒ normal condition ☐ Extreme conditions
2. Please refer to IEC 62238 Sub-clause 8.3.2 for the measurement method.

TEST CONFIGURATION

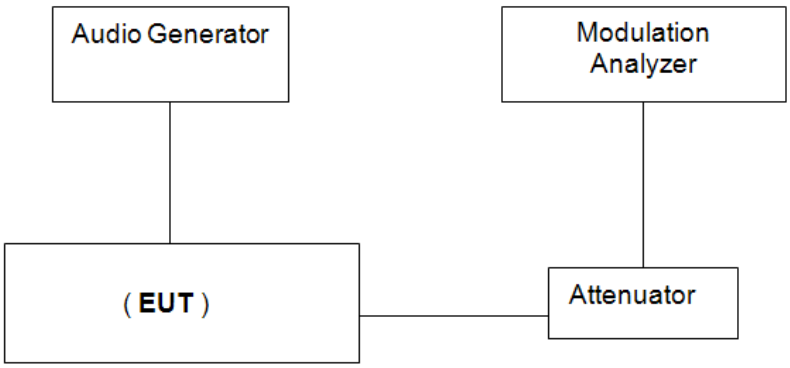

TEST MODE:

Please reference to the section 3.4

TEST RESULTS

☒ **Passed** ☐ **Not Applicable**

Note：We tested TX-AWH and TX-AWL all channel, recorded worst case TX-AWH for CH_M .

TX-AWH:CH_M			
Modulation Frequency (kHz)	Frequency Deviation (kHz)	Limit (kHz)	Result
0.30	4.438	5.00	Pass
0.40	4.465	5.00	Pass
0.50	4.818	5.00	Pass
0.60	4.790	5.00	Pass
0.70	4.768	5.00	Pass
0.80	4.735	5.00	Pass
0.90	4.714	5.00	Pass
1.00	4.709	5.00	Pass
1.20	4.581	5.00	Pass
1.40	4.529	5.00	Pass
1.60	4.551	5.00	Pass
1.80	4.646	5.00	Pass
2.00	4.745	5.00	Pass
2.20	4.835	5.00	Pass
2.40	4.756	5.00	Pass
2.55	4.534	5.00	Pass
2.60	4.440	5.00	Pass
2.80	4.285	5.00	Pass
3.00	4.001	5.00	Pass
3.00	4.001	4.00	Pass
3.50	3.226	4.00	Pass
4.00	2.541	4.00	Pass
4.50	1.940	4.00	Pass
5.00	1.501	4.00	Pass
6.00	0.950	4.00	Pass
6.00	0.950	1.50	Pass
7.00	0.615	1.05	Pass
8.00	0.365	0.77	Pass
9.00	0.230	0.58	Pass
10.00	0.148	0.46	Pass
11.00	0.100	0.37	Pass
12.00	0.050	0.30	Pass
14.00	0.050	0.21	Pass
16.00	0.050	0.15	Pass
18.00	0.050	0.12	Pass
20.00	0.050	0.09	Pass
22.00	0.050	0.07	Pass
24.00	0.050	0.06	Pass
25.00	0.050	0.05	Pass

Test plot as follow:

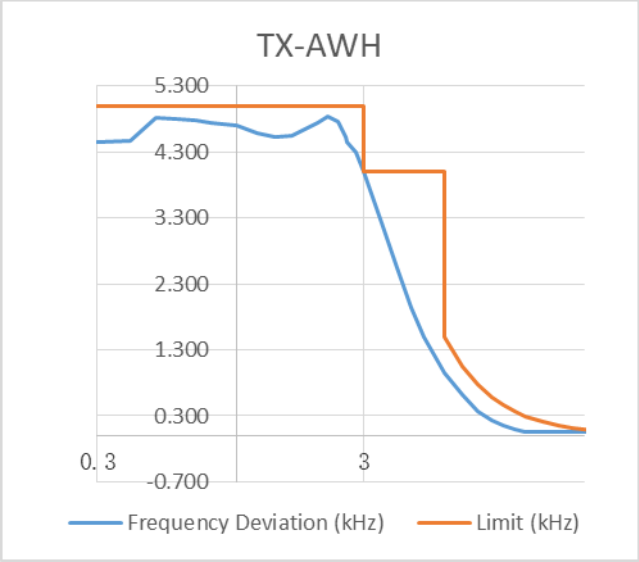

5.2.4. Sensitivity of the modulator, including microphone

This characteristic expresses the capability of the transmitter to produce sufficient modulation when an audio frequency signal corresponding to the normal mean speech level is applied to the microphone.

LIMIT

IEC 62238 Sub-clause 8.4.3

The resulting frequency deviation shall be between ±1,5 kHz and ±3 kHz.

TEST PROCEDURE

1. The test conditions.
   ☒ normal condition ☐ Extreme conditions
2. Please refer to IEC 62238 Sub-clause 8.4.2 for the measurement method.

TEST CONFIGURATION

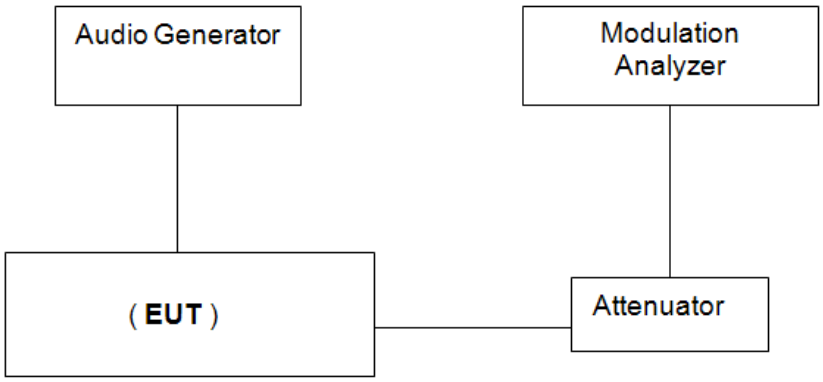

TEST MODE:

Please reference to the section 3.4

TEST RESULTS

☒ **Passed** ☐ **Not Applicable**

Operation Mode	Test Channel	Iuput Frequency (kHz)	Measured (kHz)	Limit (kHz)	Result
TX-AWH	CH_L	1	3.1	±2.5～ ±4.5	Pass
		0.5	3.1		
		0.3	3.1		
	CH_M	1	3.1		
		0.5	3.1		
		0.3	3.1		
	CH_H	1	3.1		
		0.5	3.1		
		0.3	3.1		
TX-AWL	CH_L	1	3.1	±2.5～ ±4.5	Pass
		0.5	3.1		
		0.3	3.1		
	CH_M	1	3.1		
		0.5	3.1		
		0.3	3.1		
	CH_H	1	3.1		
		0.5	3.1		
		0.3	3.1		

5.2.5. Audio frequency response

The audio frequency response is the frequency deviation of the transmitter as a function of the modulating frequency.

LIMIT

IEC 62238 Sub-clause 8.5.3
The audio frequency response shall be within +1 dB and -3 dB of a 6 dB/octave line passing through the reference point (see figure 2). The upper limit frequency shall be 2,55 kHz for 12,5 kHz channels.

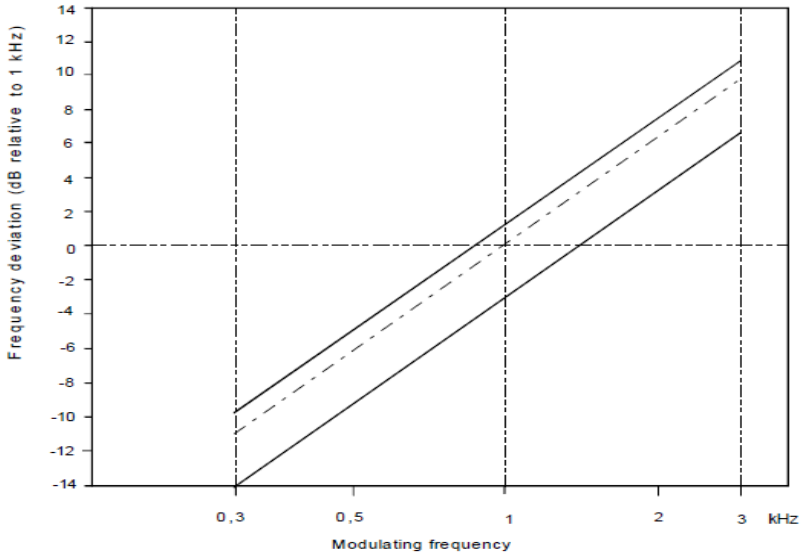

Figure 2: Audio frequency response

TEST CONFIGURATION

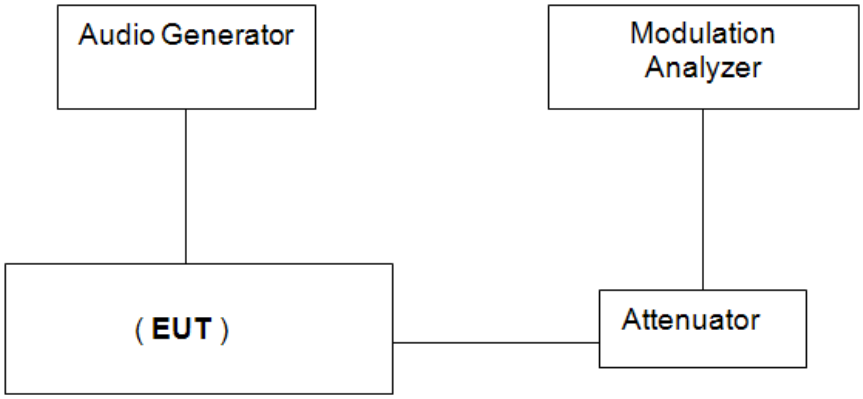

TEST PROCEDURE

1. The test conditions.

☒ normal condition ☐ Extreme conditions

2. Please refer to IEC 62238 Sub-clause 8.5.2 for the measurement method.

TEST MODE:

Please reference to the section 3.4

TEST RESULTS

☒ **Passed** ☐ **Not Applicable**

Note：

We tested TX-AWH and TX-AWL all channel, recorded worst case TX-AWH for CH_M .

TX-AWH:CH$_M$			
Frequency (kHz)	Frequency Deviation (kHz)	1kHz Reference Deviation (kHz)	Audio Frequency Response (dB)
0.3	0.23	1.004	-12.89
0.4	0.34	1.004	-9.52
0.5	0.45	1.004	-6.96
0.6	0.56	1.004	-5.02
0.7	0.67	1.004	-3.47
0.8	0.78	1.004	-2.19
0.9	0.89	1.004	-1.05
1	1.00	1.004	-0.07
1.2	1.21	1.004	1.62
1.4	1.42	1.004	3.02
1.6	1.64	1.004	4.24
1.8	1.85	1.004	5.30
2	2.06	1.004	6.25
2.2	2.26	1.004	7.06
2.55	2.52	1.004	7.99
2.4	2.44	1.004	7.73
2.6	2.54	1.004	8.07
2.7	2.56	1.004	8.13
2.8	2.55	1.004	8.11
3	2.48	1.004	7.86

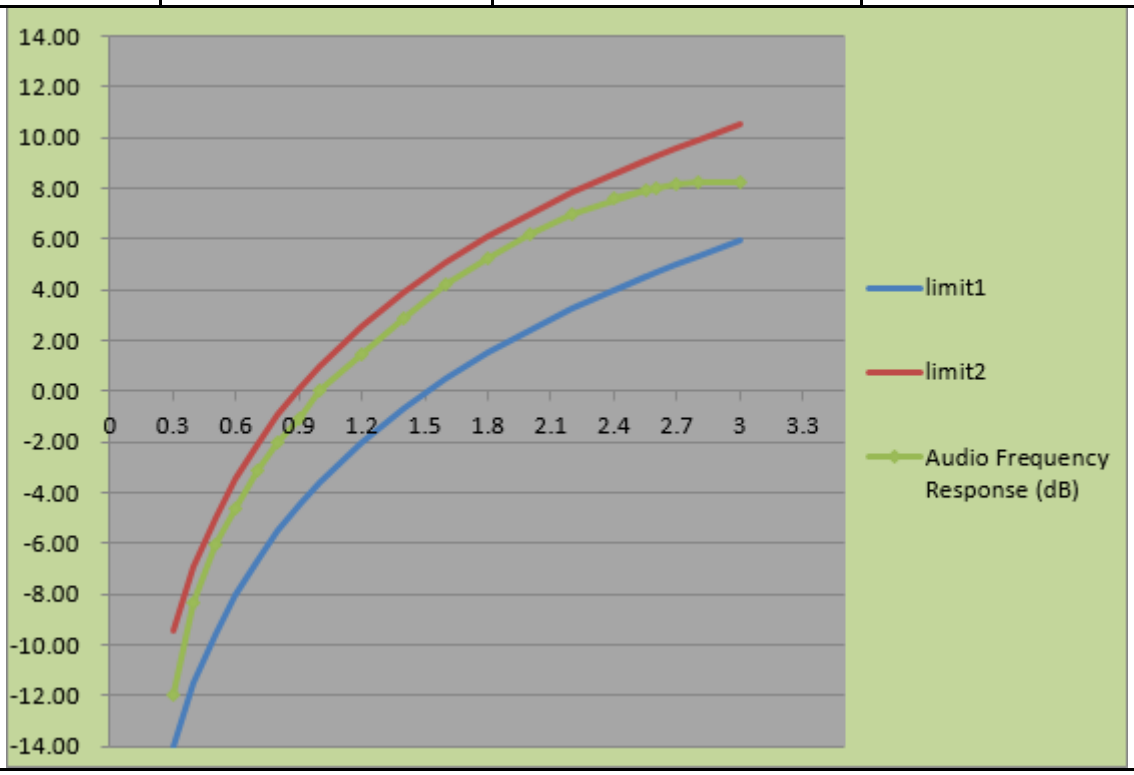

5.2.6. Audio frequency harmonic distortion of the emission

The harmonic distortion of the emission modulated by an audio frequency signal is defined as the ratio, expressed as a percentage, of the root mean square (rms) voltage of all the harmonic components of the fundamental modulation frequency to the total rms voltage of the modulation signal after linear demodulation

LIMIT

IEC 62238 Sub-clause 8.6.3
The harmonic distortion shall not exceed 10 %.

TEST CONFIGURATION

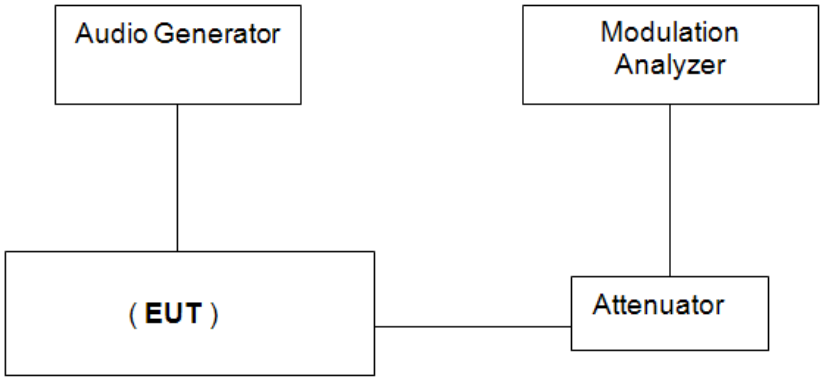

TEST PROCEDURE

1. The test conditions.
☒ normal condition ☒ Extreme conditions
2.Please refer to IEC 62238 Sub-clause 8.6.2 for the measurement method.

TEST MODE:

Please reference to the section 3.4

TEST RESULTS

☒ **Passed** ☐ **Not Applicable**

Operation Mode	Temperature (℃)	Voltage (V)	Modulated Frequency (kHz)	Test Channel	Measured (%)	Limit (%)	Result
TX-AWH	T_N	V_N	0.3	CH_L	4.7	≤10	Pass
				CH_M	5.1		
				CH_H	5.1		
			0.5	CH_L	3.2		
				CH_M	3.1		
				CH_H	3.1		
			1.0	CH_L	1.1		
				CH_M	1.2		
				CH_H	1.1		
	T_L	V_H	1.0	CH_L	1.5	≤10	
				CH_M	1.6		
				CH_H	1.5		
		V_L	1.0	CH_L	1.5		
				CH_M	1.7		
				CH_H	1.3		
	T_H	V_H	1.0	CH_L	1.4		
				CH_M	1.5		
				CH_H	1.7		
		V_L	1.0	CH_L	1.5		
				CH_M	1.5		
				CH_H	1.6		

Operation Mode	Temperature (℃)	Voltage (V)	Modulated Frequency (kHz)	Test Channel	Measured (%)	Limit (%)	Result
TX-AWL	T_N	V_N	0.3	CH_L	5.0	≤10	Pass
				CH_M	5.1		
				CH_H	5.2		
			0.5	CH_L	3.2		
				CH_M	3.1		
				CH_H	3.2		
			1.0	CH_L	1.1		
				CH_M	1.2		
				CH_H	1.2		
	T_L	V_H	1.0	CH_L	1.4	≤10	
				CH_M	1.6		
				CH_H	1.7		
		V_L	1.0	CH_L	1.5		
				CH_M	1.8		
				CH_H	2.1		
	T_H	V_H	1.0	CH_L	1.4		
				CH_M	1.5		
				CH_H	1.9		
		V_L	1.0	CH_L	1.5		
				CH_M	1.8		
				CH_H	1.9		

5.2.7. Adjacent Channel Power

The adjacent channel power is that part of the total power output of a transmitter under defined conditions of modulation, which falls within a specified passband centred on the nominal frequency of either of the adjacent channels. This power is the sum of the mean power produced by the modulation, hum and noise of the transmitter.

LIMIT

IEC 62238 Sub-clause 8.7.3
The adjacent channel power shall not exceed a value of:
25 kHz channel: 70 dB below the carrier power of the transmitter without any need to be below 0,2 μW.
12 kHz channel: 60 dB below the carrier power of the transmitter without any need to be below 0,2 μW.

TEST CONFIGURATION

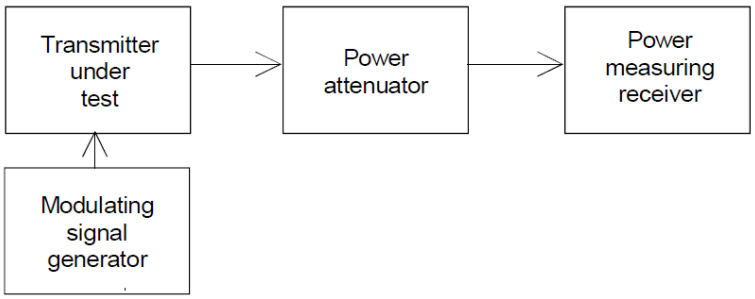

TEST PROCEDURE

1. The test conditions.
☒ normal condition ☐ Extreme conditions
2.Please refer to IEC 62238 Sub-clause 8.7.2 for the measurement method.

TEST MODE:

Please reference to the section 3.4

TEST RESULTS

☒ **Passed** ☐ **Not Applicable**

Please refer to the below test data:

TX-AWH				
Test Channel	Test Channel	Measurement Power (dBc)	Limit (dB)	Result
CH_L	Lower adjacent	-71.06	⩽-70	Pass
	Upper adjacent	-71.24		
CH_M	Lower adjacent	-70.65	⩽-70	Pass
	Upper adjacent	-70.32		
CH_H	Lower adjacent	-71.08	⩽-70	Pass
	Upper adjacent	-70.54		

TX-AWL				
Test Channel	Test Channel	Measurement Power (dBc)	Limit (dB)	Result
CH_L	Lower adjacent	-70.29	⩽-70	Pass
	Upper adjacent	-71.08		
CH_M	Lower adjacent	-70.23	⩽-70	Pass
	Upper adjacent	-70.59		
CH_H	Lower adjacent	-71.04	⩽-70	Pass
	Upper adjacent	-70.86		

5.2.8. Conducted spurious emissions conveyed to the antenna

Conducted spurious emissions are emissions on a frequency or frequencies which are outside the necessary bandwidth and the level of which may be reduced without affecting the corresponding transmission of information. Spurious emissions include harmonic emissions, parasitic emissions, intermodulation products and frequency conversion products, but exclude out of band emissions.

.

LIMIT

IEC 62238 Sub-clause 8.8.3

The power of any conducted spurious emission on any discrete frequency shall not exceed 0,25μW(-36dBm).

TEST CONFIGURATION

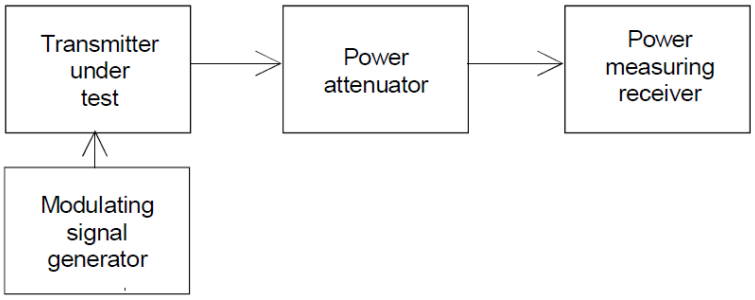

TEST PROCEDURE

1. The test conditions.

☒ normal condition ☐ Extreme conditions

2. Please refer to IEC 62238 Sub-clause 8.8.2 for the measurement method.

TEST MODE:

Please reference to the section 3.4

TEST RESULTS

☒ **Passed** ☐ **Not Applicable**

Note：

We tested TX-AWH to TX-AWL, recorded worst case for TX-AWH.

Test mode:	TX-AWH	Test Frequency:	CH_L

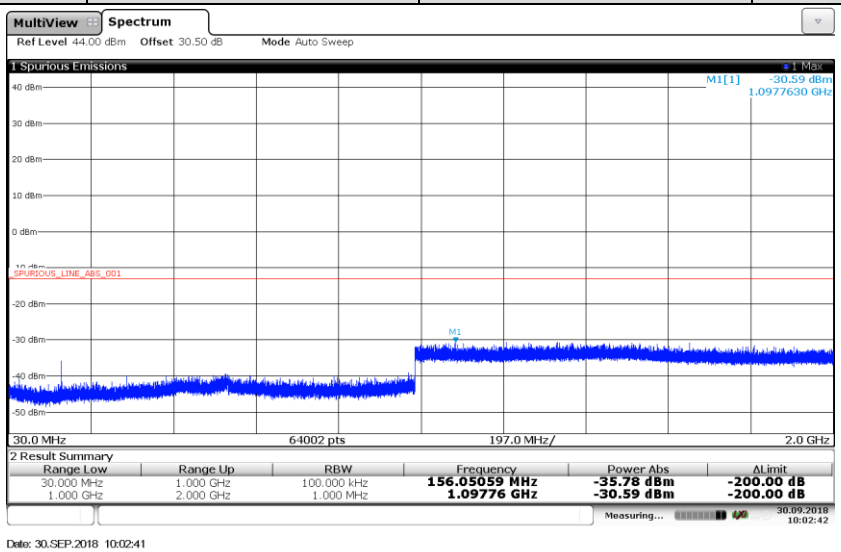

9kHz-2GHz

Test mode:	TX-AWH	Test Frequency:	CH_M

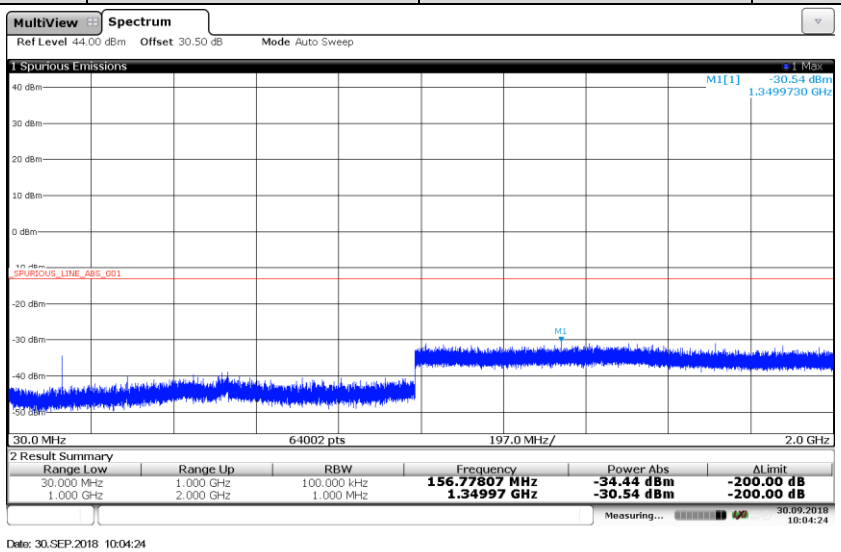

9kHz-2GHz

Test mode:	TX-AWH	Test Frequency:	CH_H

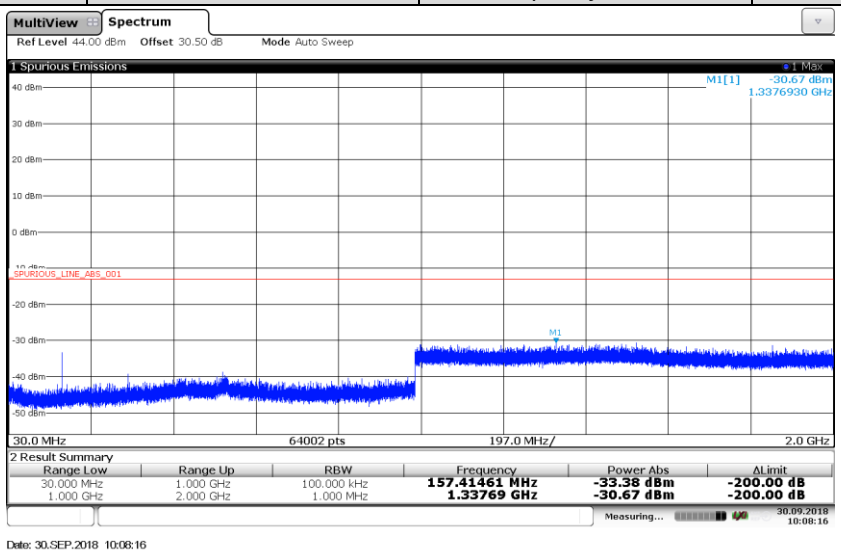

9kHz-2GHz

5.2.9. Transient frequency behaviour of the transmitter

The residual modulation of the transmitter is the ratio, in decibels, of the demodulated radiofrequency signal in the absence of wanted modulation, to the modulated radiofrequency signal produced when the normal test modulation is applied.

.

LIMIT

IEC 62238 Sub-clause 8.9.3

During the period of time t_1 and t_3 the frequency difference shall not exceed the value of one channel separation. The frequency difference, after the end of t_2, shall be within the limit of the frequency error of ±1,5 kHz.

During the period of time t_2 the frequency difference shall not exceed the value of half a channel separation. Before the start of t_3 the frequency difference shall be within the limit of the frequency error of ±1,5 kHz.

TEST CONFIGURATION

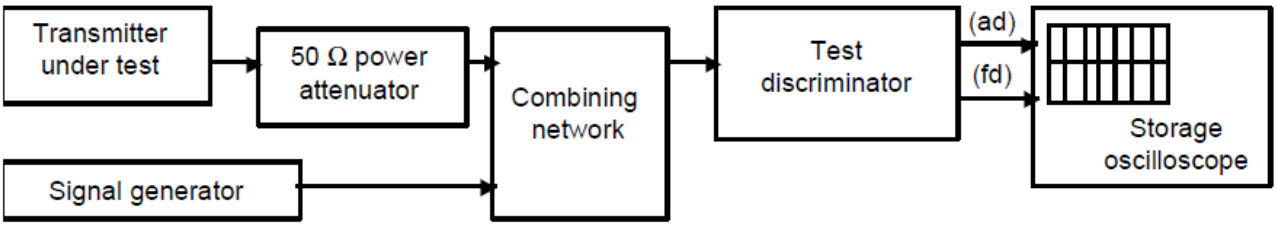

TEST PROCEDURE

1. The test conditions.

☒ normal condition ☐ Extreme conditions

2. Please refer to IEC 62238 Sub-clause 8.9.2 for the measurement method.

TEST MODE:

Please reference to the section 3.4

TEST RESULTS

☒ **Passed** ☐ **Not Applicable**

Please refer to the below test data:

Note:

We tested TX-AWH to TX-AWL,recorded worst case at TX-AWH for CH_M.

Transmitter Frequency Behaviour @ 25kHz Channel Separation------Off – On

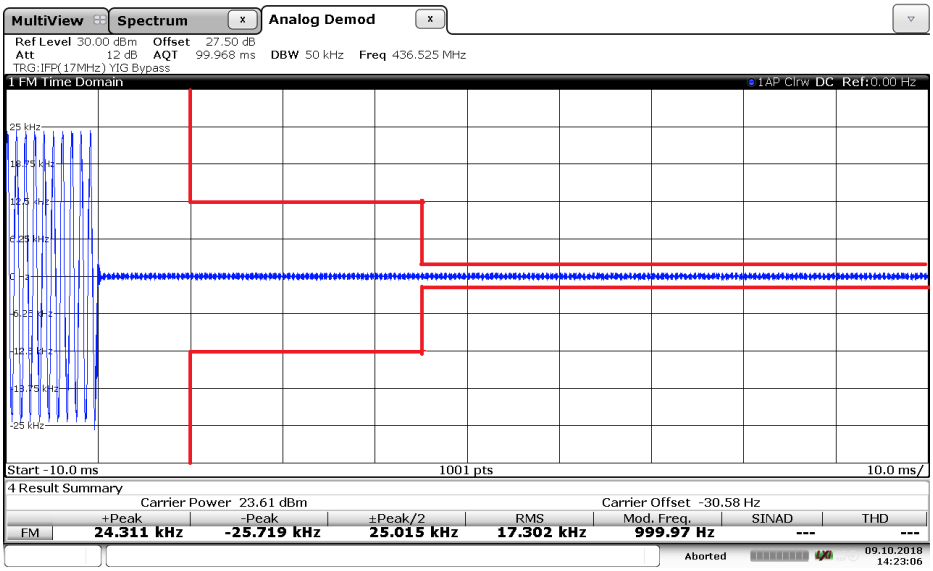

Date: 9.OCT.2018 14:23:05

Transmitter Frequency Behaviour @ 25kHz Channel Separation------On – Off

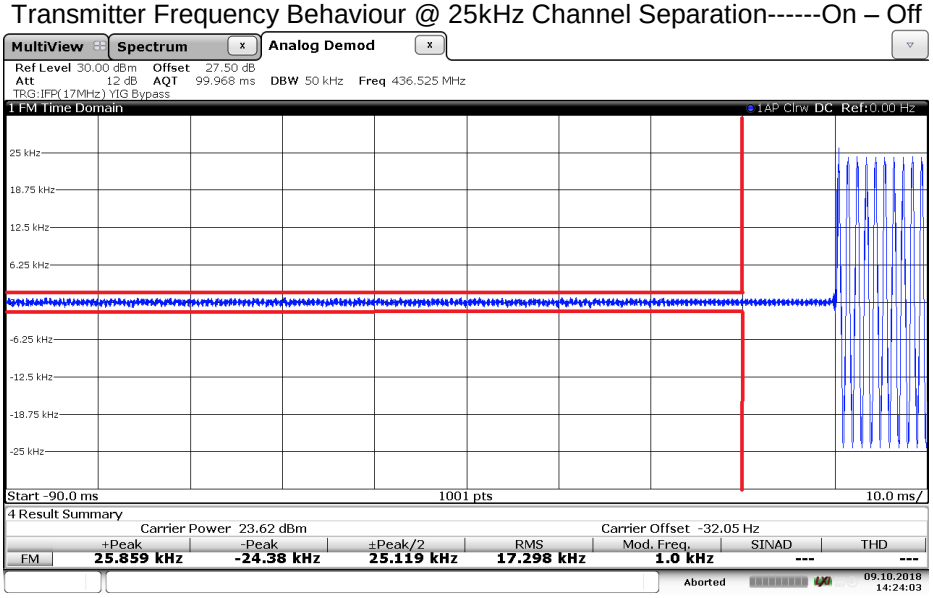

Date: 9.OCT.2018 14:24:03

5.2.10. Residual modulation of the transmitter

The residual modulation of the transmitter is the ratio, in dB, of the demodulated RF signal in the absence of wanted modulation, to the demodulated RF signal produced when the normal test modulation is applied.
.

LIMIT

IEC 62238 Sub-clause 8.10.3
The residual modulation shall not exceed -40 dB on either 25 kHz or 12,5 kHz channels.

TEST CONFIGURATION

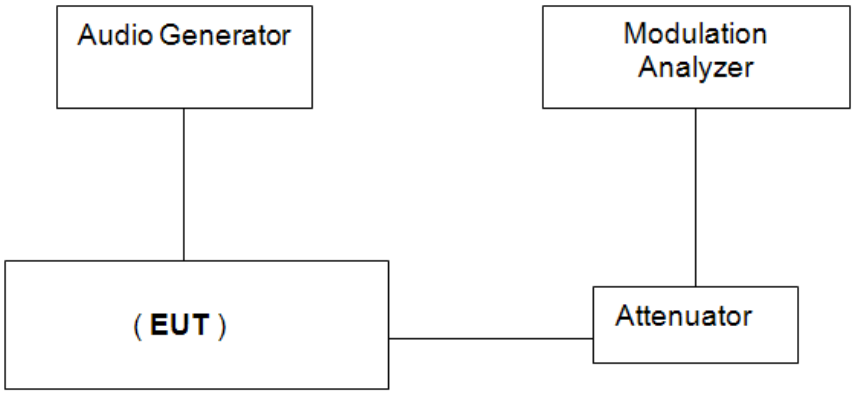

TEST PROCEDURE

1. The test conditions.
☒ normal condition ☐ Extreme conditions

2. Please refer to IEC 62238 Sub-clause 8.10.2 for the measurement method.

TEST MODE:

Please reference to the section 3.4

TEST RESULTS

☒ **Passed** ☐ **Not Applicable**

Operation Mode	Test Channel	Measured (dB)	Limit (dB)	Result
TX-AWH	CH_L	-43.05	⩽-40	Pass
	CH_M	-43.17		
	CH_H	-43.28		

Operation Mode	Test Channel	Measured (dB)	Limit (dB)	Result
TX-AWL	CH_L	-42.86	⩽-40	Pass
	CH_M	-43.01		
	CH_H	-42.65		

5.2.11. Frequency error (demodulated DSC signal)

The frequency error for the B- and the Y-state is the difference between the measured frequency from the demodulator and the nominal values.

LIMIT

IEC 62238 Sub-clause 8.11.3
The measured frequency from the demodulator at any time for the B-state shall be within 2 100 Hz ±10 Hz and for the Y-state within 1 300 Hz ± 10 Hz.

TEST CONFIGURATION

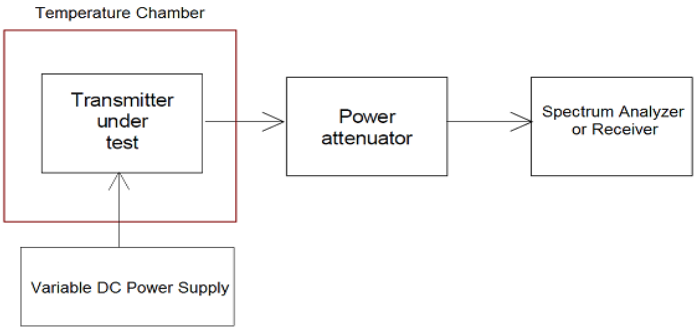

TEST PROCEDURE

1. The test conditions.
☒ normal condition ☒ Extreme conditions
2. Please refer to IEC 62238 Sub-clause 8.11.2 for the measurement method.

TEST MODE:

Please reference to the section 3.4

TEST RESULTS

☒ **Passed** ☐ **Not Applicable**

Operation Mode	Test conditions		Frequency Error (kHz)	Limit (Hz)	Result
	Temperature(℃)	Voltage(V)	CH_{M1}		
TX-B	T_N	V_N	2099.67	2100±10	Pass
	T_L	V_H	2099.54		
		V_L	2099.56		
	T_H	V_H	2099.81		
		V_L	2099.79		

Operation Mode	Test conditions		Frequency Error (kHz)	Limit (Hz)	Result
	Temperature(℃)	Voltage(V)	CH_{M1}		
TX-Y	T_N	V_N	1299.82	1300±10	Pass
	T_L	V_H	1299.78		
		V_L	1299.81		
	T_H	V_H	1299.86		
		V_L	1299.83		

5.2.12. Modulation index for DSC

This test measures the modulation index in the B and Y states.

LIMIT

IEC 62238 Sub-clause 8.12.3
The modulation index shall be 2,0 ± 10 %.

TEST CONFIGURATION

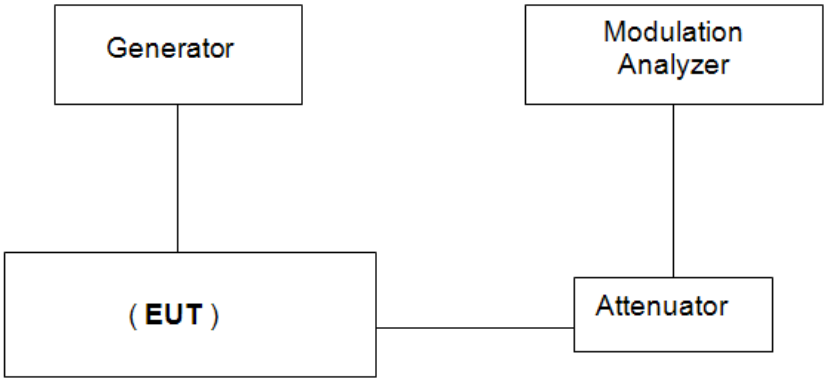

TEST PROCEDURE

1. The test conditions.
☒ normal condition ☐ Extreme conditions
2.Please refer to IEC 62238 Sub-clause 8.12.2 for the measurement method.

TEST MODE:

Please reference to the section 3.4

TEST RESULTS

☒ **Passed** ☐ **Not Applicable**

Operation Mode	Test Channel	Modulation index	Limit	Result
TX-B	CH_{M1}	2.12	2.0 ± 10 %	Pass
TX-Y	CH_{M1}	2.06	2.0 ± 10 %	Pass

5.2.13. Modulation rate for DSC

The modulation rate is the bit stream speed measured in bit/s.

LIMIT

IEC 62238 Sub-clause 8.13.3
The frequency shall be 600 Hz ± 30 ppm corresponding to a modulation rate of 1 200 baud.

TEST CONFIGURATION

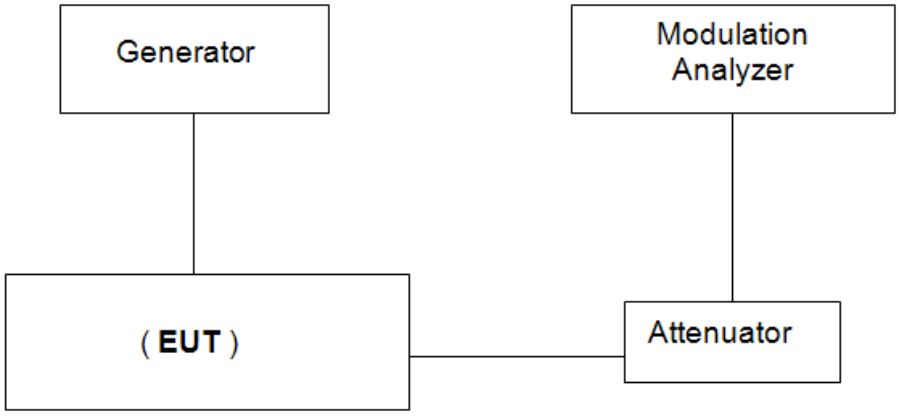

TEST PROCEDURE

1. The test conditions.
☒ normal condition ☐ Extreme conditions
2. Please refer to IEC 62238 Sub-clause 8.13.2 for the measurement method.

TEST MODE:

Please reference to the section 3.4

TEST RESULTS

☒ **Passed** ☐ **Not Applicable**

Operation Mode	Test Channel	Modulation rate (Hz)	Limit	Result
TX-(B+Y)	CH_{M1}	599.997	600Hz ± 30 ppm	Pass

5.2.14. Testing of generated call sequences

Generated call sequences are call which comply with the requirements of ITU-R. Recommendation M.493-13.

Requirement

IEC 62238 Sub-clause 8.14.3
The requirements of ITU-R Recommendation M.493-13 regarding message composition and content shall be met.
The generated calls shall be analyzed with the calibrated apparatus for correct configuration of the signal format, including time diversity. It shall be verified that, after transmission of a DSC call, the transmitter re-tunes to the original channel. However, in the case of a distress call, the transmitter shall tune to channel 16 and automatically select the maximum power. The telecommands used and the channels tested for switching shall be stated in the test report.

TEST RESULTS

☒ **Passed** ☐ **Not Applicable**

Please refer to the below test data:

Call Sent	Received without error	Telecommand 1	Telecommand 2
Distress	Yes	100	126
All Ships Urgency	Yes	100	126
All Ships Safety	Yes	100	126
Individual Routine	Yes	100	126
Group Routine	Yes	100	126

5.3. Receiver for Radiotelephone Requirement

5.3.1. Harmonic distortion and rated audio frequency output power

The harmonic distortion at the receiver output is defined as the ratio, expressed as a percentage, of the total rms voltage of all the harmonic components of the modulation audio frequency to the total rms voltage of the signal delivered by the receiver.
The rated audio frequency output power is the value stated by the manufacturer to be the maximum power available at the output, for which all the requirements of the present document are met.

LIMIT

IEC 62238 Sub-clause 9.1.3
• 2 W in a loudspeaker;
• 1 mW in the handset earphone.
The harmonic distortion shall not exceed 10 %.

TEST CONFIGURATION

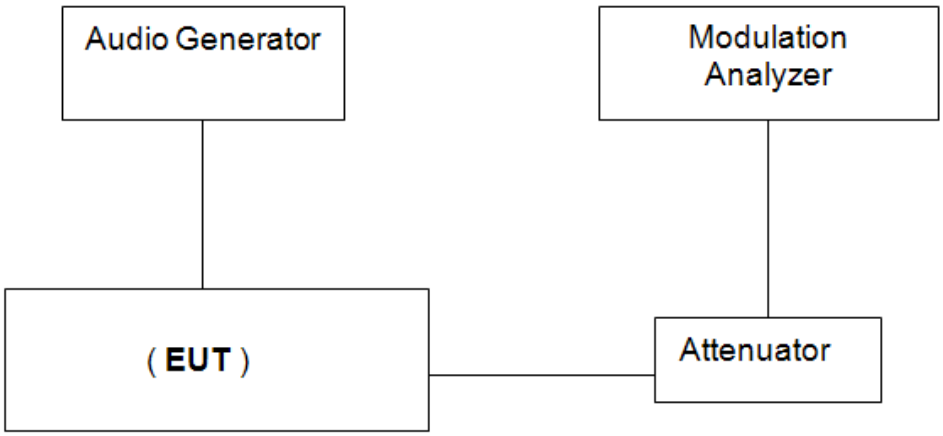

TEST PROCEDURE

1. The test conditions.
☒ normal condition ☐ Extreme conditions

2. Please refer to IEC 62238 Sub-clause 9.1.2 for the measurement method.

TEST MODE:

Please reference to the section 3.4

TEST RESULTS

☒ **Passed** ☐ **Not Applicable**

Please refer to the below test data:

Harmonic distortion:

RX-AW					
Signals Level (dBμV)	Modulated Frequency (kHz)	Test Frequency (MHz)	Measured (%)	Limit (%)	Result
60	0.3	CH_L	2.8	⩽10	Pass
		CH_M	2.8		
		CH_H	2.7		
	0.5	CH_L	1.8		
		CH_M	1.7		
		CH_H	1.7		
	1.0	CH_L	1.4		
		CH_M	1.3		
		CH_H	1.3		
100	0.3	CH_L	3.2	⩽10	Pass
		CH_M	3.1		
		CH_H	3.2		
	0.5	CH_L	2.5		
		CH_M	2.6		
		CH_H	2.5		
	1.0	CH_L	2.7		
		CH_M	2.7		
		CH_H	2.7		

rated audio frequency output power:

RX-AW			
Test Channel	Measured (W)	Limit (W)	Result
CH_L	2.18	⩾2.0	Pass
CH_M	2.17		
CH_H	2.15		

5.3.2. Audio frequency response

The audio frequency response is the variation in the receiver's audio frequency output level as a function of the modulating frequency of a received radio frequency signal modulated with constant deviation.

LIMIT

IEC 62238 Sub-clause 9.2.3
The audio frequency response shall not deviate by more than +1 dB or -3 dB from a characteristic giving the output level as a function of the audio frequency, decreasing by 6 dB per octave and passing through the measured point at 1 kHz (figure 5).
Certified Intrinsically Safe equipment need not comply with the limits below 700 Hz.

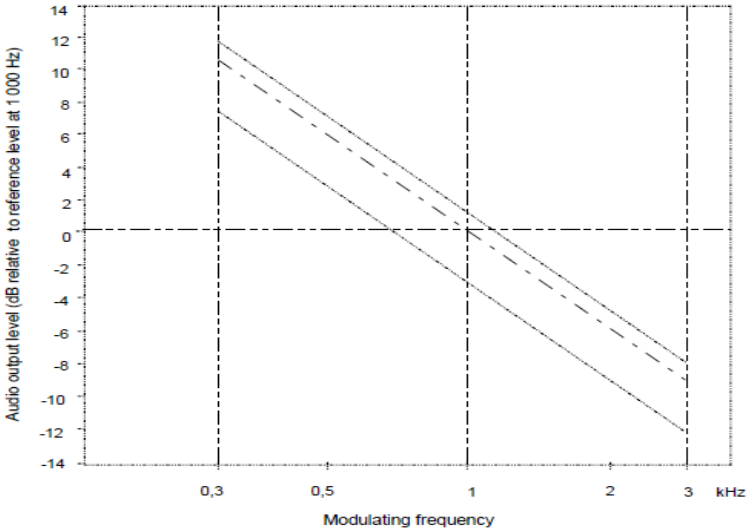

Figure 5: Audio frequency response

TEST CONFIGURATION

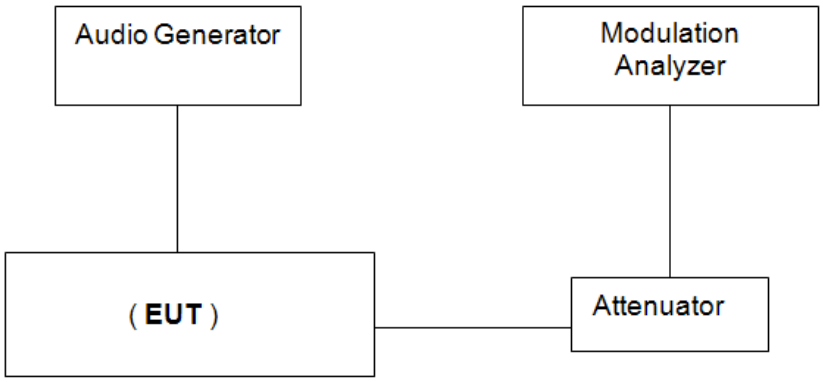

TEST PROCEDURE

1. The test conditions.

☒ normal condition ☐ Extreme conditions

2.Please refer to IEC 62238 Sub-clause 9.2.2 for the measurement method.

TEST MODE:

Please reference to the section 3.4

TEST RESULTS

☒ **Passed** ☐ **Not Applicable**

Please refer to the below test data:

RX-AW			
Frequency (kHz)	Output Level (V)	Reference Level at 1kHz (V)	Audio Frequency Response (dB)
0.3	0.8614	0.3215	8.56
0.4	0.7222	0.3215	7.03
0.5	0.6305	0.3215	5.85
0.6	0.5469	0.3215	4.62
0.7	0.4689	0.3215	3.28
0.8	0.4078	0.3215	2.06
0.9	0.3600	0.3215	0.98
1.0	0.3294	0.3215	0.21
1.2	0.2716	0.3215	-1.46
1.4	0.2356	0.3215	-2.70
1.6	0.2057	0.3215	-3.88
1.8	0.1811	0.3215	-4.99
2	0.1630	0.3215	-5.90
2.2	0.1508	0.3215	-6.57
2.4	0.1287	0.3215	-7.95
2.6	0.1371	0.3215	-7.40
2.7	0.1273	0.3215	-8.05
2.8	0.1225	0.3215	-8.38
3	0.1166	0.3215	-8.81

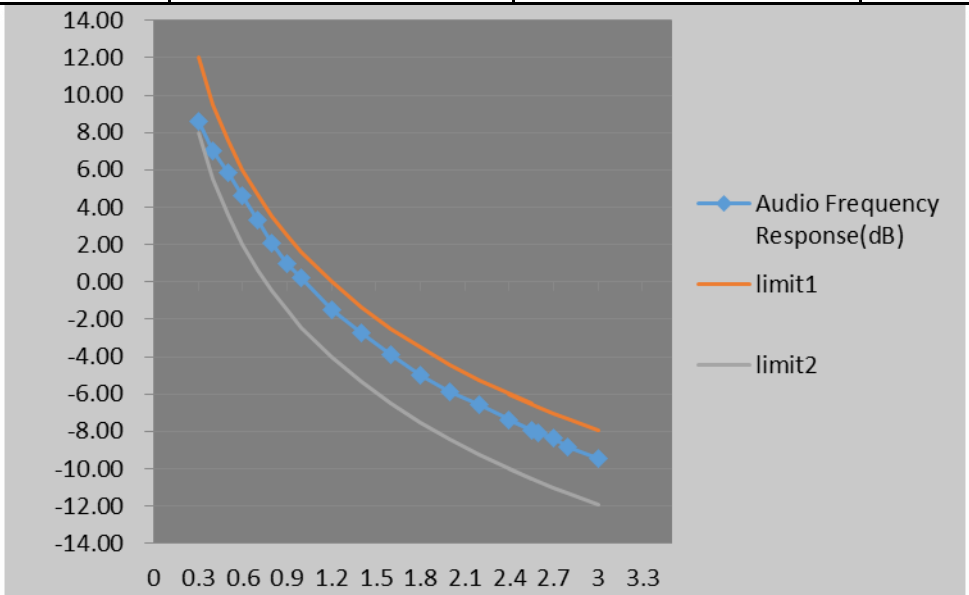

5.3.3. Maximum Usable Sensitivity

The maximum usable sensitivity of the receiver is the minimum level of the signal (emf) at the nominal frequency of the receiver which, when applied to the receiver input with normal test modulation (clause 6.4), will produce:
- in all cases, an audio frequency output power of at least 50 % of the rated output power (clause 9.1); and
- a SINAD ratio of 20 dB, measured at the receiver output through a psophometric telephone filtering network such as described in ITU-T Recommendation O.41 [6].

LIMIT

IEC 62238 Sub-clause 9.3.3
The maximum usable sensitivity for either 25 kHz or 12,5 kHz channels shall not exceed +6 dBµV (emf) under normal test conditions and +12 dBµV (emf) under extreme test conditions.

TEST CONFIGURATION

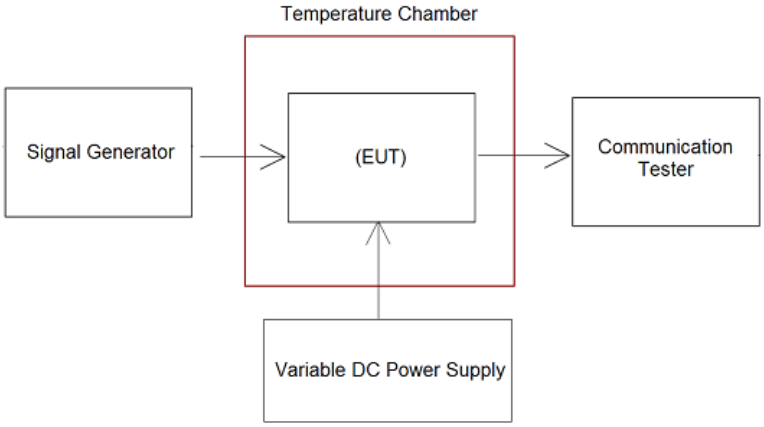

TEST PROCEDURE

1. The test conditions.

☒ normal condition ☒ Extreme conditions

2.Please refer to IEC 62238 Sub-clause 9.3.2 for the measurement method.

TEST MODE:

Please reference to the section 3.4

TEST RESULTS

☒ **Passed** ☐ **Not Applicable**

Please refer to the below test data:

Operation Mode	Temperature (℃)	Voltage (V)	Test Channel	Measured (dBμV)	Limit (dB)	Result
RX-AW	T_N	V_N	CH_L	-6.4	⩽+6.0	Pass
			CH_M	-5.4		
			CH_H	-5.4		
	T_L	V_H	CH_L	-5.1	⩽+12.0	
			CH_M	-4.2		
			CH_H	-4.5		
		V_L	CH_L	-5.2		
			CH_M	-3.9		
			CH_H	-4.2		
	T_H	V_H	CH_L	-4.8		
			CH_M	-3.2		
			CH_H	-3.1		
		V_L	CH_L	-3.8		
			CH_M	-2.7		
			CH_H	-2.4		

5.3.4. Co-channel rejection

The co-channel rejection is a measure of the capability of the receiver to receive a wanted modulated signal without exceeding a given degradation due to the presence of an unwanted modulated signal, both signals being at the nominal frequency of the receiver.

LIMIT

IEC 62238 Sub-clause 9.4.3
The co-channel rejection ratio, at any frequency of the unwanted signal within the specified range, shall be between: -10 dB and 0 dB.

TEST CONFIGURATION

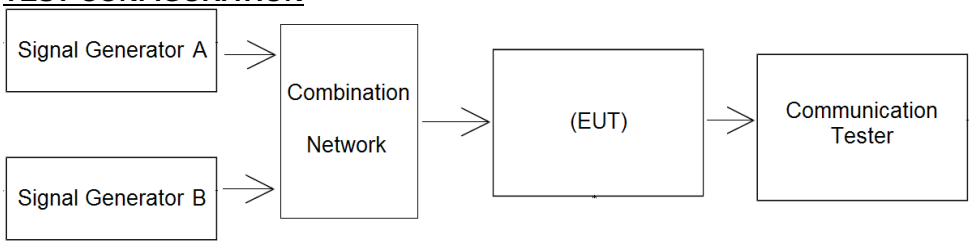

TEST PROCEDURE

1. The test conditions.
☒ normal condition ☐ Extreme conditions

2. Please refer to IEC 62238 Sub-clause 9.4.2 for the measurement method.

TEST MODE:

Please reference to the section 3.4

TEST RESULTS

☒ **Passed** ☐ **Not Applicable**

Please refer to the below test data:

RX-AW				
Test Channel	Measurement Offset (kHz)	SG B – SG A (dB)	Limit (dB)	Result
CH_L	-3	-4.1	-10～0	Pass
	0	-4.4		
	3	-3.2		
CH_M	-3	-3.9	-10～0	Pass
	0	-3.9		
	3	-2.9		
CH_H	-3	-4.2	-10～0	Pass
	0	-3.9		
	3	-3.5		

5.3.5. Adjacent channel selectivity

The adjacent channel selectivity is a measure of the capability of the receiver to receive a wanted modulated signal without exceeding a given degradation due to the presence of an unwanted modulated signal which differs in frequency from the wanted signal by the nominal channel spacing.

LIMIT

IEC 62238 Sub-clause 9.5.3
The adjacent channel selectivity shall be not less than 70 dB under normal test conditions and not less than 60 dB under extreme test conditions.

TEST CONFIGURATION

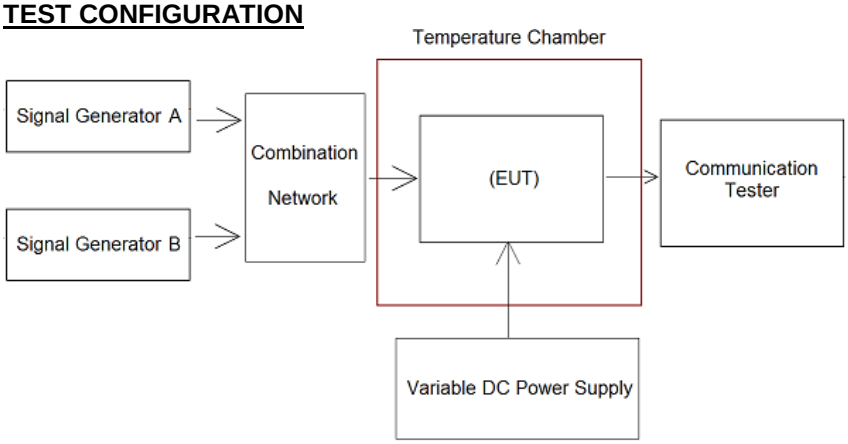

TEST PROCEDURE

1. The test conditions.
☒ normal condition ☒ Extreme conditions

2. Please refer to IEC 62238 Sub-clause 9.5.2 for the measurement method.

TEST MODE:

Please reference to the section 3.4

TEST RESULTS

☒ **Passed** ☐ **Not Applicable**

Please refer to the below test data:

RX-AW						
Test Condition		Test Channel	Measurement Position	SG B – SG A (dB)	Limit (dB)	Result
Temperature (℃)	Voltage (V)					
T_N	V_N	CH_L	Lower adjacent	74.1	⩾70	Pass
			Upper adjacent	73.7		
		CH_M	Lower adjacent	73.5		
			Upper adjacent	74.5		
		CH_H	Lower adjacent	74.8		
			Upper adjacent	74.2		
T_L	V_H	CH_L	Lower adjacent	73.2	⩾60	Pass
			Upper adjacent	73.8		
		CH_M	Lower adjacent	73.3		
			Upper adjacent	73.2		
		CH_H	Lower adjacent	73.5		
			Upper adjacent	73.2		
	V_L	CH_L	Lower adjacent	73.9	⩾60	Pass
			Upper adjacent	72.6		
		CH_M	Lower adjacent	72.3		
			Upper adjacent	72.5		
		CH_H	Lower adjacent	73.9		
			Upper adjacent	72.8		
T_H	V_H	CH_L	Lower adjacent	73.3	⩾60	Pass
			Upper adjacent	72.7		
		CH_M	Lower adjacent	72.8		
			Upper adjacent	73.4		
		CH_H	Lower adjacent	73.3		
			Upper adjacent	73.1		
	V_L	CH_L	Lower adjacent	72.1	⩾60	Pass
			Upper adjacent	73.2		
		CH_M	Lower adjacent	73.7		
			Upper adjacent	73.3		
		CH_H	Lower adjacent	72.2		
			Upper adjacent	72.5		

5.3.6. Spurious Response Rejection

The spurious response rejection is a measure of the capability of the receiver to discriminate between the wanted modulated signal at the nominal frequency and an unwanted signal at any other frequency at which a response is obtained.

LIMIT

IEC 62238 Sub-clause 9.6.3
At any frequency separated from the nominal frequency of the receiver by more than 25 kHz, the spurious response rejection ratio shall be not less than 70 dB.

TEST CONFIGURATION

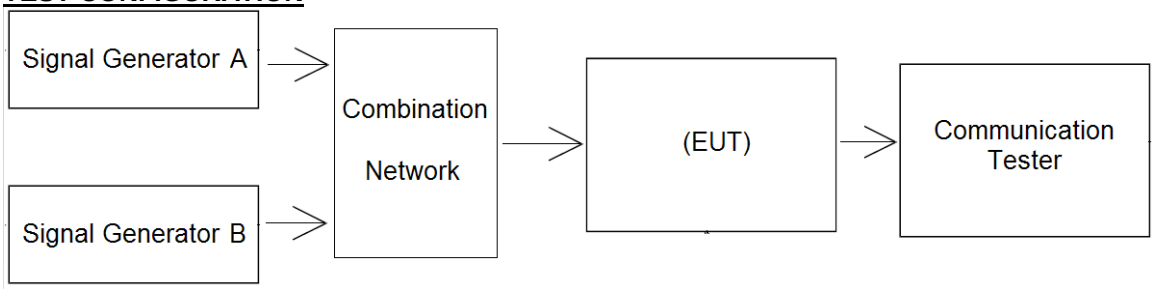

TEST PROCEDURE

1. The test conditions.
☒ normal condition ☐ Extreme conditions

2. Please refer to IEC 62238 Sub-clause 9.6.2 for the measurement method.

TEST MODE:

Please reference to the section 3.4

TEST RESULTS

☒ **Passed** ☐ **Not Applicable**

Please refer to the below test data:

RX-AW				
Test Channel	Spurious Frequency (MHz)	SG B – SG A (dB)	Limit (dB)	Result
CH_L	156.075	77.8	⩾70	Pass
	156.525	78.3		
	134.900	80.2		
	177.700	78.3		
CH_M	156.575	79.1	⩾70	Pass
	157.025	80.2		
	135.400	79.3		
	178.200	80.3		
CH_H	161.775	80.5	⩾70	Pass
	162.225	78.4		
	140.600	79.3		
	183.400	77.9		

An increment sweep was made between 100 kHz - 2000 MHz with no other significant responses detected.

5.3.7. Intermodulation response

The intermodulation response is a measure of the capability of a receiver to receive a wanted modulated signal without exceeding a given degradation due to the presence of two or more unwanted signals with a specific frequency relationship to the wanted signal frequency.

LIMIT

IEC 62238 Sub-clause 9.7.3
The intermodulation response ratio shall not be less than 68 dB.

TEST CONFIGURATION

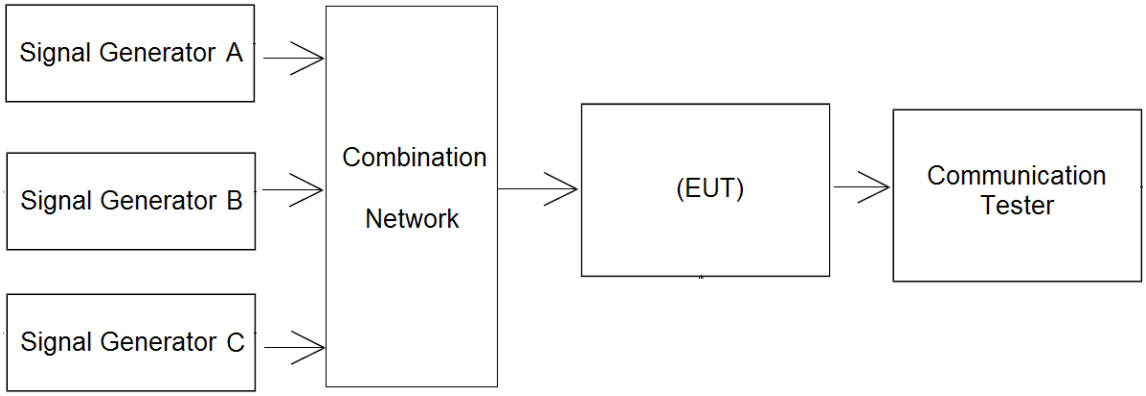

TEST PROCEDURE

1. The test conditions.
☒ normal condition ☐ Extreme conditions

2. Please refer to IEC 62238 Sub-clause 9.7.2 for the measurement method.

TEST MODE:

Please reference to the section 3.4

TEST RESULTS

☒ **Passed** ☐ **Not Applicable**

Please refer to the below test data:

RX-AW					
Test Channel	Measurement Offset (kHz)		SG B/C – SG A (dB)	Limit (dB)	Result
	SG B	SG C			
CH_L	-50	-100	70.6	⩾68	Pass
	50	100	70.1		
CH_M	-50	-100	71.2	⩾68	Pass
	50	100	70.3		
CH_H	-50	-100	70.5	⩾68	Pass
	50	100	70.2		

5.3.8. Blocking or Desensitization

Blocking is a change (generally a reduction) in the wanted output power of the receiver or a reduction of the SINAD ratio due to an unwanted signal on another frequency.

LIMIT

IEC 62238 Sub-clause 9.8.3
The blocking level for any frequency within the specified ranges, shall be not less than 90 dBµV (emf), except at frequencies on which spurious responses are found

TEST CONFIGURATION

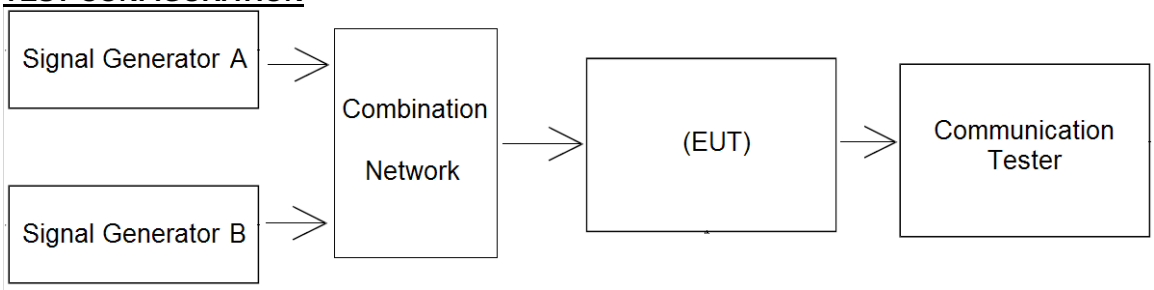

TEST PROCEDURE

1. The test conditions.

☒ normal condition ☐ Extreme conditions

2.Please refer to IEC 62238 Sub-clause 9.8.2 for the measurement method.

TEST MODE:

Please reference to the section 3.4

TEST RESULTS

☒ **Passed** ☐ **Not Applicable**

Please refer to the below test data:

RX-AW				
Test Channel	Measurement Offset (MHz)	SG B (dBμV)	Limit (dBμV)	Result
CH_L	-10	103.4	⩾90	Pass
	-5	102.2		
	-2	101.1		
	-1	100.8		
	1	99.7		
	2	101.1		
	5	102.5		
	10	103.6		
CH_M	-10	103.2	⩾90	Pass
	-5	102.1		
	-2	101.5		
	-1	100.5		
	1	99.5		
	2	101.5		
	5	102.0		
	10	103.0		
CH_H	-10	103.8	⩾90	Pass
	-5	102.4		
	-2	101.0		
	-1	99.2		
	1	100.5		
	2	101.8		
	5	102.3		
	10	103.9		

5.3.9. Conducted spurious emissions

Conducted spurious emissions from the receiver are components at any frequency, present at the receiver input port.

LIMIT

IEC 62238 Sub-clause 9.9.3
The power of any spurious radiation shall not exceed 2 nw(-57dBm) at any frequency in the range between 9 kHz and 2 GHz.

TEST CONFIGURATION

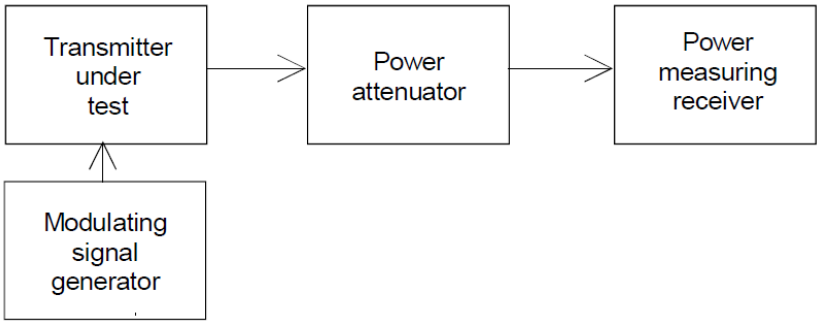

TEST PROCEDURE

1. The test conditions.
☒ normal condition ☐ Extreme conditions

2. Please refer to IEC 62238 Sub-clause 9.9.2 for the measurement method.

TEST MODE:

Please reference to the section 3.4

TEST RESULTS

☒ **Passed** ☐ **Not Applicable**

Please refer to the below test data:

Test mode:	RX-AW	Test Frequency:	CH_L

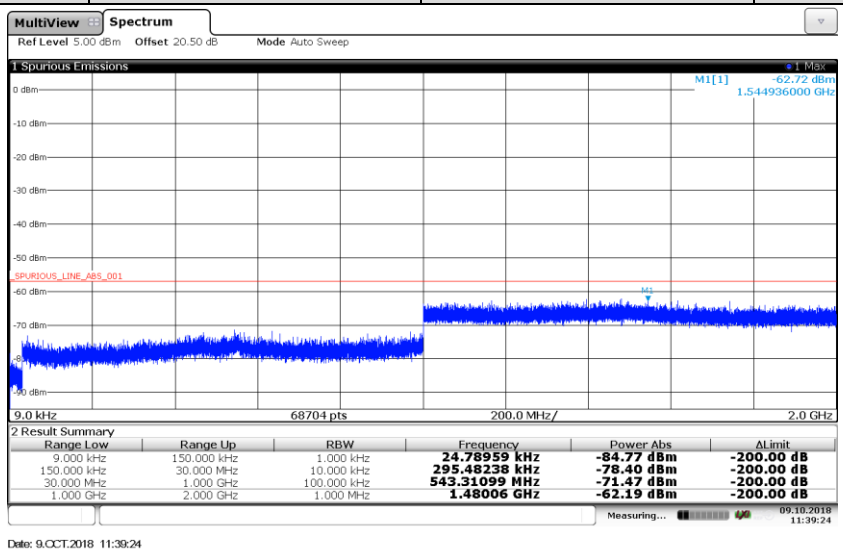

9kHz-2GHz

Test mode:	RX-AW	Test Frequency:	CH_M

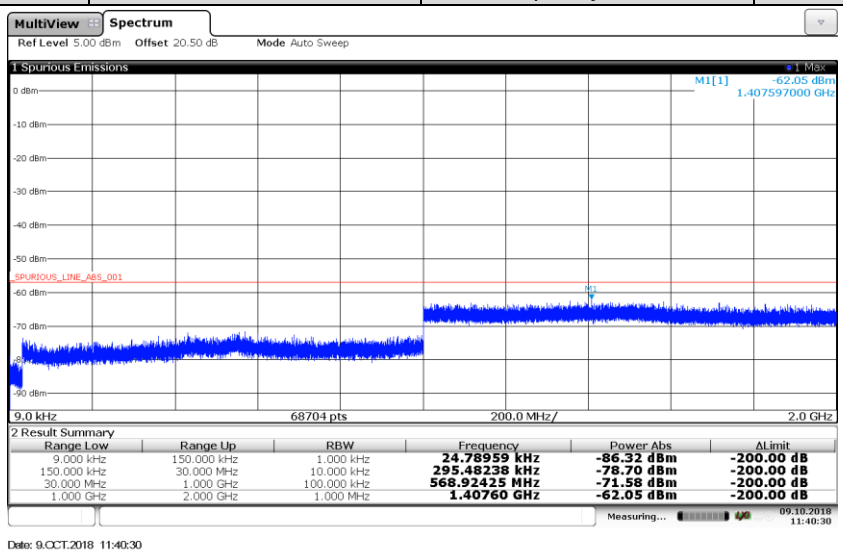

9kHz-2GHz

Test mode:	RX-AW	Test Frequency:	CH_H

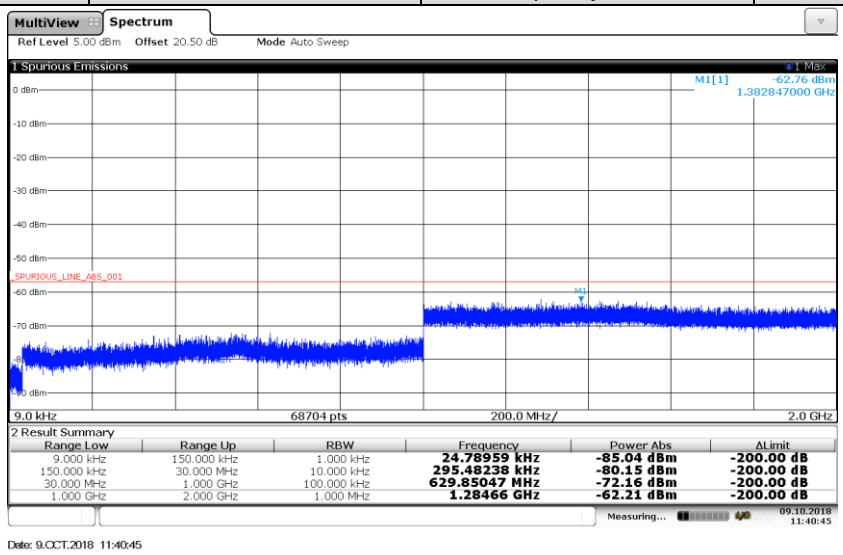

9kHz-2GHz

5.3.10. Receiver noise and hum level

The receiver noise and hum level is defined as the ratio, in dB, of the audio frequency power of the noise and hum resulting from spurious effects of the power supply system or from other causes, to the audio frequency power produced by a high frequency signal of average level, modulated by the normal test modulation and applied to the receiver input.

LIMIT

IEC 62238 Sub-clause 9.10.3
The receiver noise and hum level shall not exceed -40 dB, relative to the modulated signal.

TEST CONFIGURATION

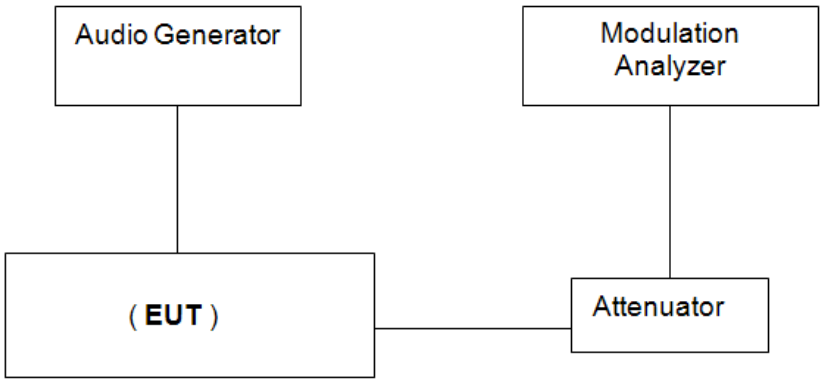

TEST PROCEDURE

1. The test conditions.
☒ normal condition ☐ Extreme conditions

2. Please refer to IEC 62238 Sub-clause 9.10.2 for the measurement method.

TEST MODE:

Please reference to the section 3.4

TEST RESULTS

☒ **Passed** ☐ **Not Applicable**

Please refer to the below test data:

Operation Mode	Test Channel	Measured (dB)	Limit (dB)	Result
RX-AW	CH_L	-41.4	⩽-40	Pass
	CH_M	-40.7		
	CH_H	-41.0		

5.3.11. Squelch operation

The purpose of the squelch facility is to mute the receiver audio output signal when the level of the signal at the receiver input is less than a given value.

LIMIT

IEC 62238 Sub-clause 9.11.3
Under the conditions specified in a) clause 9.11.2, the audio frequency output power shall not exceed -40 dB relative to the rated output power.
Under the conditions specified in b) clause 9.11.2, the input level shall not exceed +6 dBμV (emf) and the SINAD ratio shall be at least 20 dB.
Under the conditions specified in c) clause 9.11.2, the input signal shall not exceed +6 dBμV (emf) when the control is set at maximum.

TEST CONFIGURATION

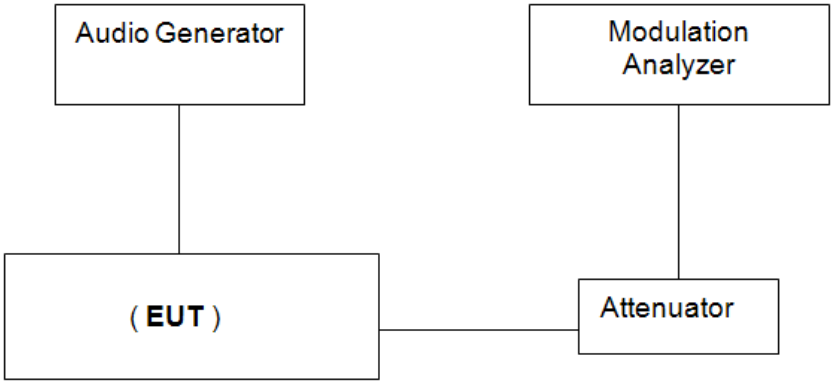

TEST PROCEDURE

1. The test conditions.
   ☒ normal condition ☐ Extreme conditions
2. Please refer to IEC 62238 Sub-clause 9.11.2 for the measurement method.

TEST MODE:

Please reference to the section 3.4

TEST RESULTS

☒ **Passed** ☐ **Not Applicable**

Please refer to the below test data:

Under the conditions specified in a):

RX-AW			
Test Channel	Measured (dB)	Limit (dB)	Result
CH_L	-41.3	≤-40	Pass
CH_M	-40.9		
CH_H	-40.8		

Under the conditions specified in b):

RX-AW			
Test Channel	Measured (dBμV)	Limit (dBμV)	Result
CH_L	1.9	≤+6.0	Pass
CH_M	2.6		
CH_H	2.9		

RX-AW			
Test Channel	Measured SINAD (dB)	Limit (dBμV)	Result
CH_L	32.19	⩾20	Pass
CH_M	32.16		
CH_H	31.85		

Under the conditions specified in c):

RX-AW			
Test Channel	Measured (dBμV)	Limit (dBμV)	Result
CH_L	2.8	≤+6.0	Pass
CH_M	2.7		
CH_H	3.2		

5.3.12. Squelch hysteresis

Squelch hysteresis is the difference in dB between the receiver input signal levels at which the squelch opens and closes.

LIMIT

IEC 62238 Sub-clause 9.12.3
The squelch hysteresis shall be between 3 dB and 6 dB.

TEST CONFIGURATION

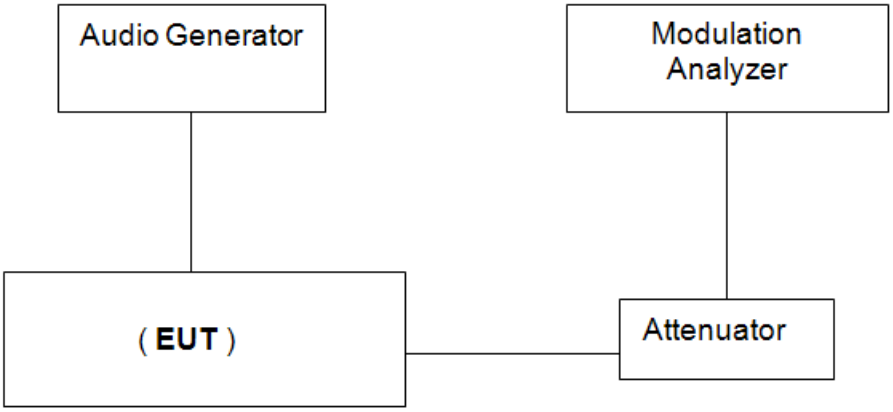

TEST PROCEDURE

1. The test conditions.
☒ normal condition ☐ Extreme conditions

2. Please refer to IEC 62238 Sub-clause 9.12.2 for the measurement method.

TEST MODE:

Please reference to the section 3.4

TEST RESULTS

☒ **Passed** ☐ **Not Applicable**

Please refer to the below test data:

RX-AW			
Test Channel	Measured (dB)	Limit (dB)	Result
CH_L	3.8	3～6	Pass
CH_M	3.9		
CH_H	3.8		

5.3.13. Multiple watch characteristic

The scanning period is the time between the start of two successive samples of the priority channel in the absence of a signal on that channel.

LIMIT

IEC 62238 Sub-clause 9.13.3
The scanning period shall not exceed 2 s.
The dwell time on the priority channel shall not exceed 150 ms.
The dwell time on the additional channel shall be between 850 ms and 2 s as indicated by the time of the gap between two output bursts.

TEST CONFIGURATION

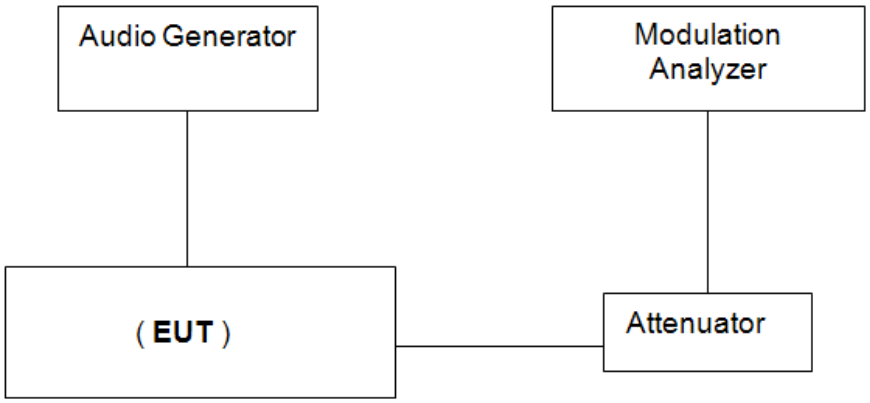

TEST PROCEDURE

1. The test conditions.
☒ normal condition ☒ Extreme conditions

2. Please refer to IEC 62238 Sub-clause 9.13.2 for the measurement method.

TEST MODE:

Please reference to the section 3.4

TEST RESULTS

☒ **Passed** ☐ **Not Applicable**

Please refer to the below test data:

Scanning Period:

RX-AW					
Test Condition		Test Channel	Measured Scanning Period (s)	Limit (s)	Result
Temperature (℃)	Voltage (V)				
T_N	V_N	CH_L	1	≤2.0	Pass
		CH_M	1		
		CH_H	1		
T_L	V_H	CH_L	1	≤2.0	Pass
		CH_M	1		
		CH_H	1		
	V_L	CH_L	1	≤2.0	Pass
		CH_M	1		
		CH_H	1		
T_H	V_H	CH_L	1	≤2.0	Pass
		CH_M	1		
		CH_H	1		
	V_L	CH_L	1	≤2.0	Pass
		CH_M	1		
		CH_H	1		

Dwell Time:

RX-AW					
Test Condition		Test Channel	Measured Dwell Time (ms)	Limit (ms)	Result
Temperature (℃)	Voltage (V)				
T_N	V_N	CH_L	100	≤150	Pass
		CH_M	100		
		CH_H	100		
T_L	V_H	CH_L	100	≤150	Pass
		CH_M	100		
		CH_H	100		
	V_L	CH_L	100	≤150	Pass
		CH_M	101		
		CH_H	100		
T_H	V_H	CH_L	100	≤150	Pass
		CH_M	100		
		CH_H	100		
	V_L	CH_L	100	≤150	Pass
		CH_M	100		
		CH_H	101		

Dwell time on the additional channel:

RX-AW					
Test Condition		Test Channel	Measured (s)	Limit (s)	Result
Temperature (℃)	Voltage (V)				
T_N	V_N	CH_L	1	0.85~2	Pass
		CH_M	1		
		CH_H	1		
T_L	V_H	CH_L	1	0.85~2	Pass
		CH_M	1		
		CH_H	1		
	V_L	CH_L	1	0.85~2	Pass
		CH_M	1		
		CH_H	1		
T_H	V_H	CH_L	1	0.85~2	Pass
		CH_M	1		
		CH_H	1		
	V_L	CH_L	1	0.85~2	Pass
		CH_M	1		
		CH_H	1		

5.4. Receiver for DSC decoder Requirement

5.4.1. Maximum usable sensitivity

The maximum usable sensitivity of the receiver is the minimum level of the signal (e.m.f.) at the nominal frequency of the receiver which when applied to the receiver input with a test modulation will produce a bit error ratio of 10^{-2}

LIMIT

IEC 62238 Sub-clause 10.1.3
The bit error ratio shall be equal to or less than 10^{-2}

TEST CONFIGURATION

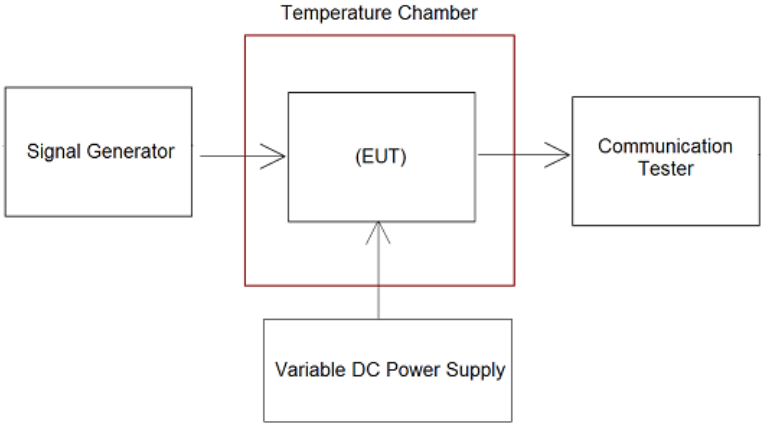

TEST PROCEDURE

1. The test conditions.
☒ normal condition ☒ Extreme conditions

2. Please refer to IEC 62238 Sub-clause 10.1.2 for the measurement method.

TEST MODE:

Please reference to the section 3.4

TEST RESULTS

☒ **Passed** ☐ **Not Applicable**

Please refer to the below test data:

Operation Mode	Temperature (℃)	Voltage (V)	Test Channel	Measured (error ratio)	Limit (error ratio)	Result
RX-DSC	T_N	V_N	CH_{M1}	0.003	$\leqslant 10^{-2}$	Pass
	T_L	V_H	CH_{M1}	0.005	$\leqslant 10^{-2}$	
		V_L	CH_{M1}	0.005		
	T_H	V_H	CH_{M1}	0.007		
		V_L	CH_{M1}	0.006		

5.4.2. Co-channel rejection

The co-channel rejection is a measure of the capability of the receiver to receive a wanted modulated signal without exceeding a given degradation due to the presence of an unwanted modulated signal, both signals being at the nominal frequency of the receiver.

LIMIT

IEC 62238 Sub-clause 10.2.3
The bit error ratio shall be equal to or less than 10^{-2}.

TEST CONFIGURATION

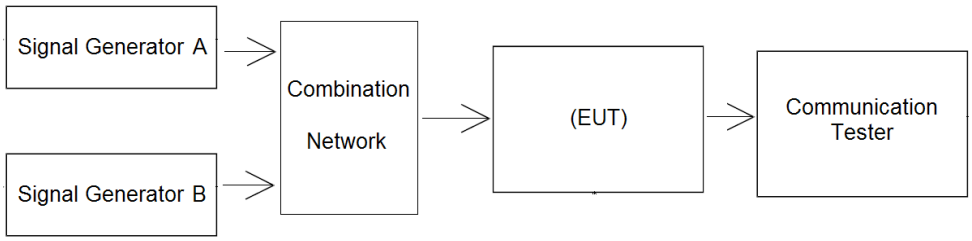

TEST PROCEDURE

1. The test conditions.

☒ normal condition ☐ Extreme conditions

2. Please refer to IEC 62238 Sub-clause 10.2.2 for the measurement method.

TEST MODE:

Please reference to the section 3.4

TEST RESULTS

☒ **Passed** ☐ **Not Applicable**

Please refer to the below test data:

Operation Mode	Test Channel	Measurement Offset (kHz)	Measured (error ratio)	Limit(error ratio)	Result
RX-DSC	CH_{M1}	-3	0.004	$\leqslant 10^{-2}$	Pass
		0	0.006		
		3	0.003		

5.4.3. Adjacent channel selectivity

The adjacent channel selectivity is a measure of the capability of the receiver to receive a wanted modulated signal without exceeding a given degradation due to the presence of an unwanted modulated signal which differs in frequency from the wanted signal by 25 kHz.

LIMIT

IEC 62238 Sub-clause 10.3.3
The bit error ratio shall be equal to or less than 10^{-2}

TEST CONFIGURATION

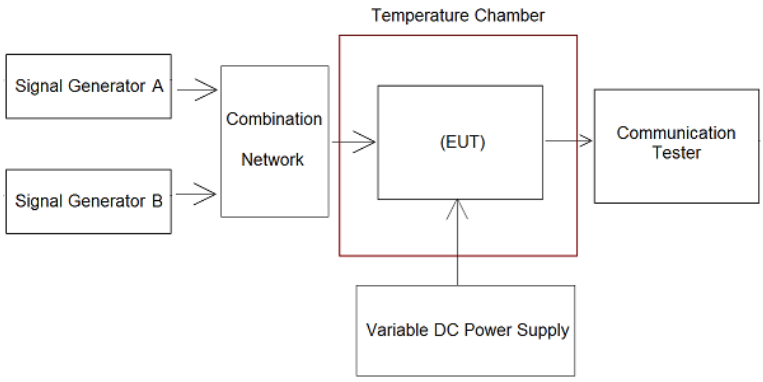

TEST PROCEDURE

1. The test conditions.
☒ normal condition ☒ Extreme conditions
2. Please refer to IEC61138 Sub-clause 10.3.2 for the measurement method.

TEST MODE:

Please reference to the section 3.4

TEST RESULTS

☒ **Passed** ☐ **Not Applicable**

Please refer to the below test data:

Operation Mode	Test Condition		Test Channel	Measurement Position	Measured (error ratio)	Limit (error ratio)	Result
	Temperature (℃)	Voltage (V)					
RX-DSC	T_N	V_N	CH_{M1}	Lower adjacent	0.006	$\leqslant 10^{-2}$	Pass
				Upper adjacent	0.006		
	T_L	V_H	CH_{M1}	Lower adjacent	0.007	$\leqslant 10^{-2}$	Pass
				Upper adjacent	0.006		
		V_L	CH_{M1}	Lower adjacent	0.008	$\leqslant 10^{-2}$	Pass
				Upper adjacent	0.007		
	T_L	V_H	CH_{M1}	Lower adjacent	0.006	$\leqslant 10^{-2}$	Pass
				Upper adjacent	0.007		
		V_L	CH_{M1}	Lower adjacent	0.008	$\leqslant 10^{-2}$	Pass
				Upper adjacent	0.007		

5.4.4. Spurious response and blocking immunity

The spurious response and blocking immunity is a measure of the capability of the receiver to receive a wanted modulated signal without exceeding a given degradation due to the presence of an unwanted modulated signal with frequencies outside the pass band of the receiver.

LIMIT

IEC 62238 Sub-clause 10.4.3
The bit error ratio shall be equal to or less than 10^{-2}

TEST CONFIGURATION

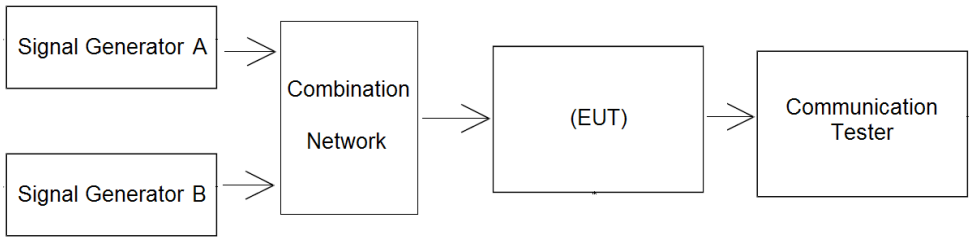

TEST PROCEDURE

1. The test conditions.

☒ normal condition ☐ Extreme conditions

2. Please refer to IEC 62238 Sub-clause 10.4.2 for the measurement method

TEST MODE:

Please reference to the section 3.4

TEST RESULTS

☒ **Passed** ☐ **Not Applicable**

Please refer to the below test data:

Spurious response:

Operation Mode	Test Channel	Spurious Frequency (MHz)	Measured (error ratio)	Limit (error ratio)	Result
RX-DSC	CH_{M1}	156.3	0.006	$\leqslant 10^{-2}$	Pass
		156.75	0.006		
		135.125	0.004		
		177.925	0.006		

Blocking immunity:

Operation Mode	Test Channel	Measurement Offset (MHz)	Measured (error ratio)	Limit (error ratio)	Result
RX-DSC	CH_{M1}	-10	0.004	$\leqslant 10^{-2}$	Pass
		-5	0.005		
		-2	0.005		
		-1	0.008		
		1	0.007		
		2	0.007		
		5	0.004		
		10	0.003		

5.4.5. Intermodulation response

The intermodulation response is a measure of the capability of the receiver to receive a wanted modulated signal without exceeding a given degradation due to the presence of two or more unwanted signals with a specific frequency relationship to the wanted signal frequency.

LIMIT

IEC 62238 Sub-clause 10.5.3
The bit error ratio shall be equal to or less than 10^{-2}

TEST CONFIGURATION

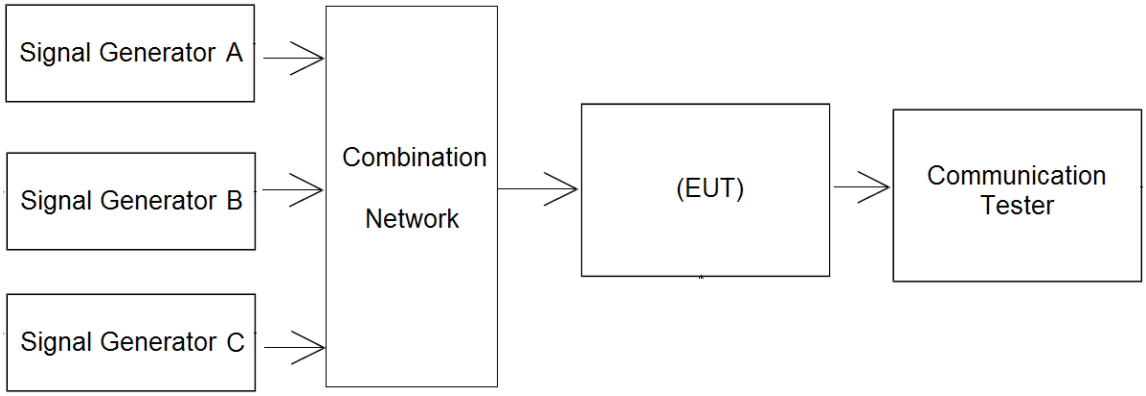

TEST PROCEDURE

1. The test conditions.

☒ normal condition ☐ Extreme conditions

2. Please refer to IEC 62238 Sub-clause 10.5.2 for the measurement method.

TEST MODE:

Please reference to the section 3.4

TEST RESULTS

☒ **Passed** ☐ **Not Applicable**

Please refer to the below test data:

Operation Mode	Test Channel	Measurement Offset (kHz)		Measured (error ratio)	Limit (error ratio)	Result
		SG B	SG C			
RX-DSC	CH_{M1}	-50	-100	0.008	$\leqslant 10^{-2}$	Pass
		50	100	0.007		

5.4.6. Dynamic range

The dynamic range of the equipment is the range from the minimum to the maximum level of a radio frequency input signal at which the bit error ratio in the output of the decoder does not exceed a specified value.

Limit

IEC 62238 Sub-clause 10.6.3

The bit error ratio shall be equal to or less than 10^{-2}.

TEST CONFIGURATION

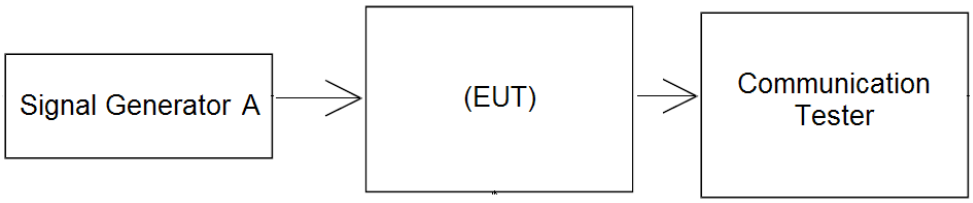

TEST PROCEDURE

1. The test conditions.

☒ normal condition ☐ Extreme conditions

2. Please refer to IEC 62238 Sub-clause 10.6.2 for the measurement method

TEST MODE:

Please reference to the section 3.4

TEST RESULTS

☒ **Passed** ☐ **Not Applicable**

Please refer to the below test data:

Operation Mode	Test Channel	Measured (error ratio)	Limit (error ratio)	Result
RX-DSC	CH_{M1}	0.007	$\leqslant 10^{-2}$	Pass

5.4.7. Spurious emissions

Spurious emissions from the receiver are components at any frequency, present at the receiver input port.
The level of spurious emissions shall be measured as the power level at the antenna.

Limit
IEC 62238 Sub-clause 10.7.3
The power of any spurious emission shall not exceed 2 nW at any frequency in the range between 9 kHz and 2 GHz.

TEST CONFIGURATION

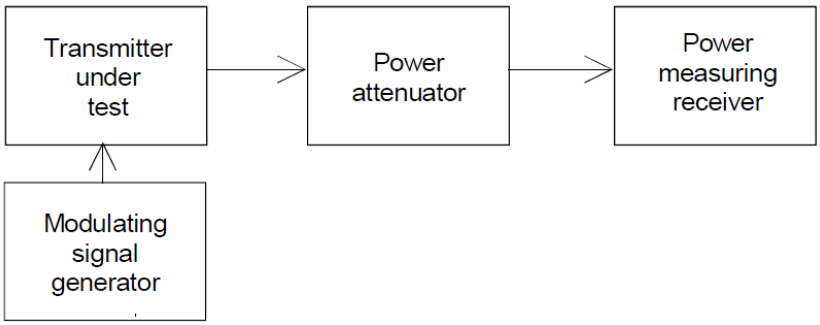

TEST PROCEDURE
1. The test conditions.
☒ normal condition ☐ Extreme conditions

2. Please refer to IEC 62238 Sub-clause 10.7.2 for the measurement method.

TEST MODE:

Please reference to the section 3.4

TEST RESULTS

☒ **Passed** ☐ **Not Applicable**

Please refer to the below test data:

Test mode:	RX-DSC	Test Frequency:	CH_{M1}
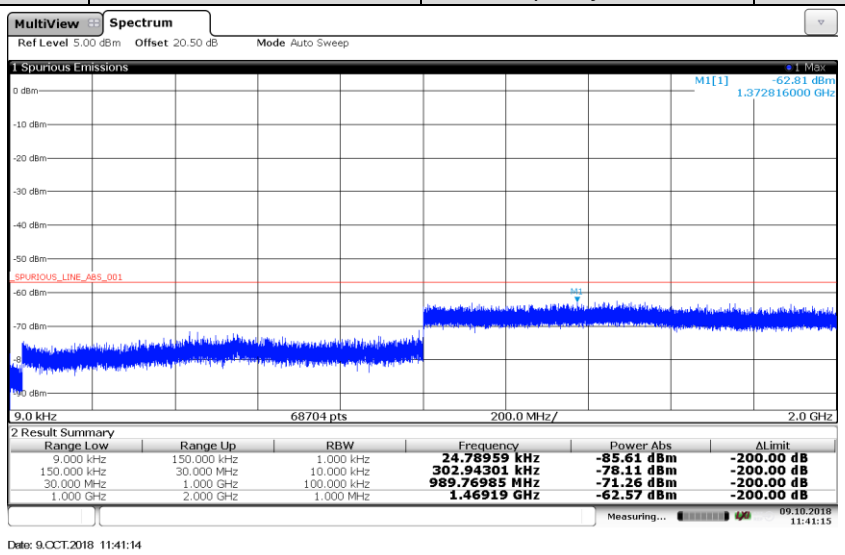			
9kHz-2GHz			

5.4.8. Verification of correct decoding of various types of DSC calls

DSC call sequences are calls that comply with ITU-R Recommendation M.493-13.

Requirement

The requirements of ITU-R Recommendation M.493-13 regarding message composition and content shall be met.
The decoded call sequences at the output of the receiver shall be examined for correct technical format, including error-check characters.
When receiver measurements are made by use of a printer or a computer, a check shall be made to ensure accordance between printer output and display indication.
It shall be verified that the equipment is capable of switching to a channel identified in the DSC call.

TEST RESULTS

☒ **Passed** ☐ **Not Applicable**

Please refer to the below test data:

Call Sent	Received (Y or N)	Telecommand 1	Telecommand 2
Distress	Y	100	126
All Ships Distress Ack	Y	110	126
All Ships Distress Relay	Y	112	126
All Ships Urgency	Y	110	126
All Ships Safety	Y	100	126
Individual Urgency	Y	100	126
Individual Safety	Y	100	126
Individual Routine	Y	100	126
Group Routine	v	100	126

Function Check	Result
Confirm that the decoded call sequences at the output of the receiver have been examined for correct technical format, including error check characteristics.	Yes
Errors found:	No
Confirm that the checks have been made to ensure accordance between printer output and display	Yes
Errors found:	No
It has been verified that the equipment is capable of switching to a channel identified in the DSC call:	Yes

5.4.9. Reaction to VTS and AIS channel management DSC transmissions

VTS and AIS channel management DSC transmissions are any DSC transmissions that are in accordance with Recommendation ITU-R M.825 or M.1371.

Requirement

The equipment shall not sound an alarm, display a message (an accurate, imformative display is permissible but not required), transmit a response or suggest a transmitted response, lock up, or require operator intervention.

TEST RESULTS

☒ **Passed** ☐ **Not Applicable**

Please refer to the below test data:

Function Check	Received (Y or N)
Not sound an alarm	Y
Not display a message(An accurate informative display is permissible but not required)	Y
Not transmit a response	Y
Not suggest a transmitted response	Y
Not lock up	Y
Not require operator intervention	Y

5.4.10. Simultaneous reception

Simultaneous reception is the ability of the unit to correctly receive DSC traffic and radiotelephony traffic at the same time.

Limit

IEC 62238 Sub-clause 10.10.3

The bit error ratio shall be equal to or less than 10^{-2}

TEST CONFIGURATION

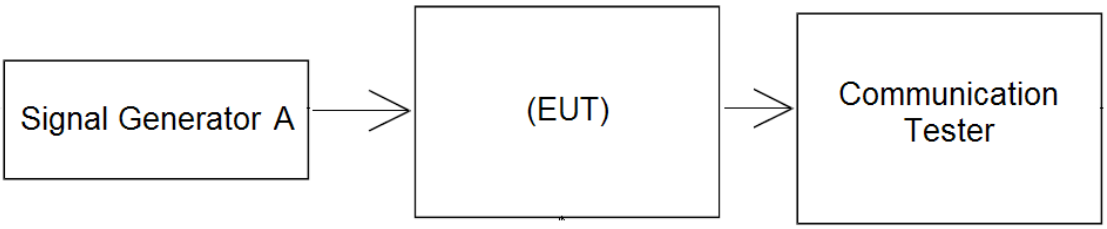

TEST PROCEDURE

1. The test conditions.

☒ normal condition ☐ Extreme conditions

2. Please refer to IEC 62238 Sub-clause 10.10.2 for the measurement method.

TEST MODE:

Please reference to the section 3.4

TEST RESULTS

☒ **Passed** ☐ **Not Applicable**

Please refer to the below test data:

TEST RESULTS

☒ **Passed** ☐ **Not Applicable**

Operation Mode	Test Channel	Measured SINAD (dB)	Limit (dB)	Result
RX-AW	CH_M	22.36	⩾20	Pass

Operation Mode	Test Channel	Measured (error ratio)	Limit (error ratio)	Result
RX-DSC	CH_{M1}	0.006	⩽10^{-2}	Pass

----------End of Report----------