TEST REPORT

For

25 Watt VHF/FM Marine Transceiver

In conformity with

IEC 60945: 2002

Model: GX2400GPS

FCC ID: K6630673X3D

ISED: 511B-30673X3D

Report No: WE190925BC1-12

Issue Date: 19 Mar. 2020

Prepared for

YAESU MUSEN CO., LTD.
Tennozu Parkside Building 2-5-8 Higashi-Shinagawa,
Shinagawa-ku, Tokyo 140-0002 JAPAN
Telephone: +81+(0) 3-6711-4121
FAX: +81+(0) 3-6711-4278

Prepared by

SGS Japan Inc.
3-5-23, Kitayamata, Tsuzuki-ku, Yokohama, 224-0021, Japan
Telephone: +81+ (0)45 - 550 - 3520
FAX: +81+ (0)45 - 592 - 7506

This Test Report is issued by the Company under its General Conditions of Service printed overleaf or available on request and accessible at http://www.sgs.com. Attention is drawn to the limitation of liability, indemnification and jurisdiction issues defined therein. Unless otherwise stated the results shown in this Test Report refer only to the sample(s) tested. This Test Report cannot be reproduced expert, in full, without prior approval of the Company. Any unauthorized alteration, forgery or falsification of the content or appearance of this test report is unlawful and offenders may be prosecuted to the fullest extent of the law.
この試験報告書は裏面に記載された、もしくは http://www.sgs.com で入手が可能なサービスに関する一般的条件に則して発行されます。そちらに明記されている弊社の負うべき債務・補償の範囲及び司法管轄の項目をご注意ください。他に特に明記のない限り、この試験報告書に記載された結果は、試験サンプルのみに属します。この書面全体の複製以外には、弊社からの事前の許可を得ること無く複製することを禁じます。この検査報告書を無断で変更、偽造、改ざんすることは違法であり、違反者に対しては法的手段を講じることになります。

Table of contents

1 General information 3
1.1 Product description 3
1.2 Test(s) performed / Summary of test result 4
1.3 Applicable basic standards 5
1.4 Test facility 5
1.5 Measurement uncertainty 6
1.6 Description of essencial requirements and test results 7
1.7 Performance Criteria 8
1.8 Setup of equipment under test (EUT) 9
1.9 Equipment modifications 11
1.10 Deviation from the standard 11

2 Test result and procedure 12
2.1 EMI requirement 12
2.1.1 Radiated emissions 12
2.1.2 Conducted emissions 21
2.2 EMS requirement 24
2.2.1 Radiated disturbance 24
2.2.2 Electrostatic discharge 26
2.2.3 Fast transients (bursts) 27
2.2.4 Conducted radio frequency disturbance 29
2.2.5 Power supply short term variation 35
2.2.6 Power supply failure 36
2.2.7 Slow transients (surges) 37

3 Test setup photographs 38

4 List of utilized test equipment/ calibration 44

History

Report No	Date	Revisions	Issued by
WE190925BC1-11	18 Nov. 2019	Initial Issue	T. Kato
WE190925BC1-12	19 Mar. 2020	Delete the family model	T. Kato

This Test Report is issued by the Company under its General Conditions of Service printed overleaf or available on request and accessible at http://www.sgs.com. Attention is drawn to the limitation of liability, indemnification and jurisdiction issues defined therein. Unless otherwise stated the results shown in this Test Report refer only to the sample(s) tested. This Test Report cannot be reproduced expert, in full, without prior approval of the Company. Any unauthorized alteration, forgery or falsification of the content or appearance of this test report is unlawful and offenders may be prosecuted to the fullest extent of the law.
この試験報告書は裏面に記載された、もしくは http://www.sgs.com で入手が可能なサービスに関する一般的条件に則して発行されます。そちらに明記されている弊社の負うべき債務・補償の範囲及び司法管轄の項目をご注意ください。他に特に明記のない限り、この試験報告書に記載された結果は、試験サンプルのみに属します。この書面全体の複製以外には、弊社からの事前の許可を得ること無く複製することを禁じます。この検査報告書を無断で変更、偽造、改ざんすることは違法であり、違反者に対しては法的手段を講じることになります。

1 General information

1.1 Product description

Test item	: 25 Watt VHF/FM Marine Transceiver
Manufacturer	: YAESU MUSEN CO., LTD.
Address	: 43 Utsuroda, Morijuku, Sukagawa-shi, Fukushima-ken 962-0001 Japan
Model	: GX2400GPS
Serial number	: 9A00 0001
Operating frequency	: 156.025 - 161.600 MHz (TX) 156.050 - 163.275 MHz (RX)
Modulation	: FM
Output power	: 25 W
Hardware Version	: SPP1
Software Version	: V0.00.20
FCC ID	: K6630673X3D
ISED Cert. No.	: 511B-30673X3D
Equipment Classification	: Exposed Equipment
Receipt date of EUT	: 25 Oct. 2019
Nominal power voltages	: DC 13.8V (DC Power supply)

This Test Report is issued by the Company under its General Conditions of Service printed overleaf or available on request and accessible at http://www.sgs.com. Attention is drawn to the limitation of liability, indemnification and jurisdiction issues defined therein. Unless otherwise stated the results shown in this Test Report refer only to the sample(s) tested. This Test Report cannot be reproduced expert, in full, without prior approval of the Company. Any unauthorized alteration, forgery or falsification of the content or appearance of this test report is unlawful and offenders may be prosecuted to the fullest extent of the law.
この試験報告書は裏面に記載された、もしくは http://www.sgs.com で入手が可能なサービスに関する一般的条件に則して発行されます。そちらに明記されている弊社の負うべき債務・補償の範囲及び司法管轄の項目をご注意ください。他に特に明記のない限り、この試験報告書に記載された結果は、試験サンプルのみに属します。この書面全体の複製以外には、弊社からの事前の許可を得ること無く複製することを禁じます。この検査報告書を無断で変更、偽造、改ざんすることは違法であり、違反者に対しては法的手段を講じることになります。

1.2 Test(s) performed / Summary of test result

Applicable Standard(s)	: IEC 60945: 2002
Test(s) started	: 28 Oct. 2019
Test(s) completed	: 07 Nov. 2019
Purpose of test(s)	: Verification of compliance with the applicable standards

Summary of test result : *Complied (Tested item only)*

Note: The above judgment is only based on the measurement data and it does not include the measurement uncertainty. Accordingly, the statement below is applied to the test result.
The EUT complies with the limit required in the standard in case that the margin is not less than the measurement uncertainty in the Laboratory.
Compliance of the EUT is more probable than non-compliance is case that the margin is less than the measurement uncertainty in the Laboratory.

Test engineer : T. Kato
(EMC/RF testing Lab.)

Reviewer : K. Onishi
(Testing Leader, EMC/RF Testing Lab.)

This Test Report is issued by the Company under its General Conditions of Service printed overleaf or available on request and accessible at http://www.sgs.com. Attention is drawn to the limitation of liability, indemnification and jurisdiction issues defined therein. Unless otherwise stated the results shown in this Test Report refer only to the sample(s) tested. This Test Report cannot be reproduced expert, in full, without prior approval of the Company. Any unauthorized alteration, forgery or falsification of the content or appearance of this test report is unlawful and offenders may be prosecuted to the fullest extent of the law.
この試験報告書は裏面に記載された、もしくは http://www.sgs.com で入手が可能なサービスに関する一般的条件に則して発行されます。そちらに明記されている弊社の負うべき債務・補償の範囲及び司法管轄の項目をご注意ください。他に特に明記のない限り、この試験報告書に記載された結果は、試験サンプルのみに属します。この書面全体の複製以外には、弊社からの事前の許可を得ること無く複製することを禁じます。この検査報告書を無断で変更、偽造、改ざんすることは違法であり、違反者に対しては法的手段を講じることになります。

1.3 Applicable basic standards

1.3.1 EMI test

Basic Standard	Title
IEC 60945 (2002) + Corr.1	"Maritime navigation and radio communication equipment and systems - General requirements - Methods of testing and required test results
CISPR 16-1-1 (2015)	Specification for radio disturbance and immunity measuring apparatus and methods - Part 1: Radio disturbance and immunity measuring apparatus

1.3.2 EMS test

Basic Standard	Title
IEC 60945 (2002) + Corr.1	"Maritime navigation and radio communication equipment and systems - General requirements - Methods of testing and required test results
IEC 61000-4-2 (2008)	Electromagnetic compatibility (EMC) - Part 4-2: Testing and measurement techniques - Electrostatic discharge immunity test
IEC 61000-4-3 (2006) +A1/A2	Electromagnetic compatibility (EMC) - Part 4-3: Testing and measurement techniques – Radiated, radio-frequency, electromagnetic field immunity test
IEC 61000-4-4 (2012)	Electromagnetic compatibility (EMC) - Part 4-4: Testing and measurement techniques - Electrical fast transient/burst immunity test
IEC 61000-4-5 (2014)	Electromagnetic compatibility (EMC) - Part 4-5: Testing and measurement techniques - Surge immunity test
IEC 61000-4-6 (2013)	Electromagnetic compatibility (EMC) - Part 4-6: Testing and measurement techniques - Immunity to conducted disturbances, induced by radio-frequency fields

1.4 Test facility

Test Site : SGS Japan Inc.
Address : 472, Nippa-cho, Kohoku-ku, Yokohama, 223-0057, Japan
TEL : +81-45-534-0645
FAX : +81-45-534-0646

Accredited by The Japan Accreditation Board for Conformity Assessment (JAB) for EMC tests stated in the scope of the certificate under Certificate Number RTL02770

Accredited by National Voluntary Laboratory Accreditation Program (NVLAP) for the emission tests stated in the scope of the certificate under Certificate Number 200780-0

Registered by Innovation, Science and Economic Development Canada (ISED):
The registered CAB identifier is JP0009.

This Test Report is issued by the Company under its General Conditions of Service printed overleaf or available on request and accessible at http://www.sgs.com. Attention is drawn to the limitation of liability, indemnification and jurisdiction issues defined therein. Unless otherwise stated the results shown in this Test Report refer only to the sample(s) tested. This Test Report cannot be reproduced expert, in full, without prior approval of the Company. Any unauthorized alteration, forgery or falsification of the content or appearance of this test report is unlawful and offenders may be prosecuted to the fullest extent of the law.
この試験報告書は裏面に記載された、もしくは http://www.sgs.com で入手が可能なサービスに関する一般的条件に則して発行されます。そちらに明記されている弊社の負うべき債務・補償の範囲及び司法管轄の項目をご注意ください。他に特に明記のない限り、この試験報告書に記載された結果は、試験サンプルのみに属します。この書面全体の複製以外には、弊社からの事前の許可を得ること無く複製することを禁じます。この検査報告書を無断で変更、偽造、改ざんすることは違法であり、違反者に対しては法的手段を講じることになります。

1.5 Measurement uncertainty

The treatment of uncertainty is based on the general matters on the definition of uncertainty in "Guide to the expression of uncertainty in measurement (GUM)" published by ISO. The Lab's uncertainty is determined by referring UKAS Publication LAB34: 2002 "The Expression of Uncertainty in EMC Testing" and CISPR16-4-2: 2011 "Uncertainty in EMC Measurements".
The uncertainty of the measurement result in the level of confidence of approximately 95% (k=2) is as follows;

Conducted emissions (10 kHz – 30 MHz):	± 3.7 dB
Radiated emissions (150 kHz - 30 MHz):	± 3.2 dB
Radiated emissions (30 MHz - 1000 MHz):	± 6.1 dB
Radiated emissions (1000 MHz - 2000 MHz):	± 4.4 dB
Electrostatic discharge:	Within the tolerance specified by the standard
Radiated disturbance:	±2.6 dB
Fast transients (bursts):	Within the tolerance specified by the standard
Conducted radio frequency disturbance:	± 1.3 dB
Slow transients (surges):	Within the tolerance specified by the standard

This Test Report is issued by the Company under its General Conditions of Service printed overleaf or available on request and accessible at http://www.sgs.com. Attention is drawn to the limitation of liability, indemnification and jurisdiction issues defined therein. Unless otherwise stated the results shown in this Test Report refer only to the sample(s) tested. This Test Report cannot be reproduced expert, in full, without prior approval of the Company. Any unauthorized alteration, forgery or falsification of the content or appearance of this test report is unlawful and offenders may be prosecuted to the fullest extent of the law.
この試験報告書は裏面に記載された、もしくは http://www.sgs.com で入手が可能なサービスに関する一般的条件に則して発行されます。そちらに明記されている弊社の負うべき債務・補償の範囲及び司法管轄の項目をご注意ください。他に特に明記のない限り、この試験報告書に記載された結果は、試験サンプルのみに属します。この書面全体の複製以外には、弊社からの事前の許可を得ること無く複製することを禁じます。この検査報告書を無断で変更、偽造、改ざんすることは違法であり、違反者に対しては法的手段を講じることになります。

1.6 Description of essencial requirements and test results

This section refers to the standard IEC 60945 clause 9.1 and 10.1

1.6.1 EMC emission measurements

Phenomena	Equipment test requirement		Applied in this report	Result (Tested HW version)
	Exposed Equipment	Portable Equipment		
Radiated emissions	**Applicable**	Applicable	Yes	Complied
Conducted emissions	**Applicable**	Not applicable	Yes	Complied

1.6.2 Immunity tests

Phenomenon	Application	Equipment test requirement		Applicable for the EUT	Result (tested HW version)
		Exposed Equipment	Portable Equipment		
Radiated Disturbance	Enclosure	**Applicable**	Applicable	Yes	Complied
Electrostatic discharge	Enclosure	**Applicable**	Applicable	Yes	Complied
Fast transients (bursts)	Signal and control ports, DC and AC power port	**Applicable**	Not applicable	Yes	Complied
Conducted radio frequency disturbance	Signal and control ports, DC and AC power port	**Applicable**	Not applicable	Yes	Complied
Power supply short term variation	AC power input ports	**Applicable**	Not Applicable	No (Note 1)	-
Power supply failure	DC and AC power input ports	**Applicable**	Not applicable	Yes	Complied
Slow transients (surges)	AC power input ports	**Applicable**	Not applicable	No (Note 1)	-

Note 1: The EUT have no AC power port

This Test Report is issued by the Company under its General Conditions of Service printed overleaf or available on request and accessible at http://www.sgs.com. Attention is drawn to the limitation of liability, indemnification and jurisdiction issues defined therein. Unless otherwise stated the results shown in this Test Report refer only to the sample(s) tested. This Test Report cannot be reproduced expert, in full, without prior approval of the Company. Any unauthorized alteration, forgery or falsification of the content or appearance of this test report is unlawful and offenders may be prosecuted to the fullest extent of the law.
この試験報告書は裏面に記載された、もしくは http://www.sgs.com で入手が可能なサービスに関する一般的条件に則して発行されます。そちらに明記されている弊社の負うべき債務・補償の範囲及び司法管轄の項目をご注意ください。他に特に明記のない限り、この試験報告書に記載された結果は、試験サンプルのみに属します。この書面全体の複製以外には、弊社からの事前の許可を得ること無く複製することを禁じます。この検査報告書を無断で変更、偽造、改ざんすることは違法であり、違反者に対しては法的手段を講じることになります。

1.7 Performance Criteria

For the immunity tests, the results are evaluated against performance criteria relating to the operating conditions and functional specifications of the EUT, and defined as follows.

1.7.1 Performance criteria A

The EUT shall continue to operate as intended during and after the test. No degradation of performance or loss of function is allowed, as defined in the relevant equipment standard and in the technical specification published by the manufacturer.

1.7.2 Performance criteria B

The EUT shall continue to operate as intended after the test. No degradation of performance or loss of function is allowed, as defined in the relevant equipment standard and in the technical specification published by the manufacturer. During the test, degradation or loss of function or performance which is self-recoverable is however, allowed, but no change of actual operating state or stored data is allowed.

1.7.3 Performance criteria C

Temporary degradation or loss of function performance is allowed during the test, provided the function is self-recoverable, or can be restored at the end of the test by the operation of the controls, as defined in the relevant equipment standard and in the technical specification published by the manufacturer.

1.7.4 Judgment Method

Volume knob position is set to approximately center position.
When the EUT shall be amplified by 1 kHz sinusoidal tone, the SINAD of the audio output measured during each individual exposure in the test sequence shall not deteriorate below a level of 20 dB.

This Test Report is issued by the Company under its General Conditions of Service printed overleaf or available on request and accessible at http://www.sgs.com. Attention is drawn to the limitation of liability, indemnification and jurisdiction issues defined therein. Unless otherwise stated the results shown in this Test Report refer only to the sample(s) tested. This Test Report cannot be reproduced expert, in full, without prior approval of the Company. Any unauthorized alteration, forgery or falsification of the content or appearance of this test report is unlawful and offenders may be prosecuted to the fullest extent of the law.
この試験報告書は裏面に記載された、もしくは http://www.sgs.com で入手が可能なサービスに関する一般的条件に則して発行されます。そちらに明記されている弊社の負うべき債務・補償の範囲及び司法管轄の項目をご注意ください。他に特に明記のない限り、この試験報告書に記載された結果は、試験サンプルのみに属します。この書面全体の複製以外には、弊社からの事前の許可を得ること無く複製することを禁じます。この検査報告書を無断で変更、偽造、改ざんすることは違法であり、違反者に対しては法的手段を講じることになります。

1.8 Setup of equipment under test (EUT)

1.8.1 Test configuration of EUT

The test configuration of the equipment under test (EUT) refers to tables and figure below.

Table: Equipment

No.	Item	Manufacturer	Model No.	Serial No.
1	25 Watt VHF/FM Marine Transceiver	YAESU MUSEN CO., LTD	GX2400GPS	9A000001

Table: Support equipment

No.	Item	Manufacturer	Model No.	Serial No.
2	External GPS Antenna	YAESU MUSEN CO., LTD	SCU-38	YTS40
3	Remote Access Microphone	YAESU MUSEN CO., LTD	SSM-70H	8F040117

Table: The following cables were used and connected to the EUT

No.	Cable Name	From	To	Length [m]	Shielded	Ferrite
A	Mic. Cable	1 (Main unit)	1 (Mic unit)	0.5	No	No
B	GPS Cable	1	2	5.0	Yes	No
C	Remote mic Cable	1	3	7.7	Yes	Yes
D	NMEA Cable	1	Load	1.5	No	No
E	SP Cable	1	Load	1.5	No	No
F	PA Cable	1	Load	1.5	No	No
G	DC Cable	1	DC	1.3	No	No
H	GND Cable	1	GND	2.0	No	No
I	NMEA2000 Cable	1	Load	1.0	Yes	No

This Test Report is issued by the Company under its General Conditions of Service printed overleaf or available on request and accessible at http://www.sgs.com. Attention is drawn to the limitation of liability, indemnification and jurisdiction issues defined therein. Unless otherwise stated the results shown in this Test Report refer only to the sample(s) tested. This Test Report cannot be reproduced expert, in full, without prior approval of the Company. Any unauthorized alteration, forgery or falsification of the content or appearance of this test report is unlawful and offenders may be prosecuted to the fullest extent of the law.
この試験報告書は裏面に記載された、もしくは http://www.sgs.com で入手が可能なサービスに関する一般的条件に則して発行されます。そちらに明記されている弊社の負うべき債務・補償の範囲及び司法管轄の項目をご注意ください。他に特に明記のない限り、この試験報告書に記載された結果は、試験サンプルのみに属します。この書面全体の複製以外には、弊社からの事前の許可を得ること無く複製することを禁じます。この検査報告書を無断で変更、偽造、改ざんすることは違法であり、違反者に対しては法的手段を講じることになります。

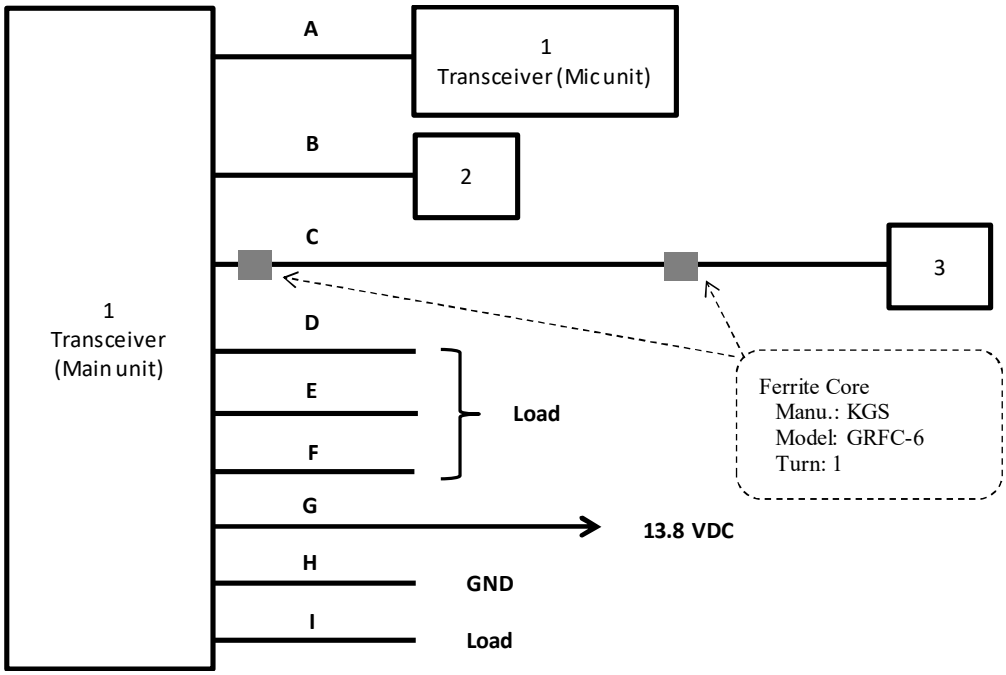

Figure: Test Configuration

This Test Report is issued by the Company under its General Conditions of Service printed overleaf or available on request and accessible at http://www.sgs.com. Attention is drawn to the limitation of liability, indemnification and jurisdiction issues defined therein. Unless otherwise stated the results shown in this Test Report refer only to the sample(s) tested. This Test Report cannot be reproduced expert, in full, without prior approval of the Company. Any unauthorized alteration, forgery or falsification of the content or appearance of this test report is unlawful and offenders may be prosecuted to the fullest extent of the law.
この試験報告書は裏面に記載された、もしくは http://www.sgs.com で入手が可能なサービスに関する一般的条件に則して発行されます。そちらに明記されている弊社の負うべき債務・補償の範囲及び司法管轄の項目をご注意ください。他に特に明記のない限り、この試験報告書に記載された結果は、試験サンプルのみに属します。この書面全体の複製以外には、弊社からの事前の許可を得ること無く複製することを禁じます。この検査報告書を無断で変更、偽造、改ざんすることは違法であり、違反者に対しては法的手段を講じることになります。

1.8.2 Operating condition:

- Rx 16ch: Receiving mode @ 16ch (156.800 MHz)
- Rx 70ch: Receiving mode @ 70ch (156.525 MHz)
- Tx 16ch: Transmitting mode @ 16ch (156.800 MHz)

1.9 Equipment modifications

No modifications have been made to the equipment in order to achieve compliance with the applicable standards described in clause 1.2.

1.10 Deviation from the standard

No deviations from the standards described in clause 1.2.

This Test Report is issued by the Company under its General Conditions of Service printed overleaf or available on request and accessible at http://www.sgs.com. Attention is drawn to the limitation of liability, indemnification and jurisdiction issues defined therein. Unless otherwise stated the results shown in this Test Report refer only to the sample(s) tested. This Test Report cannot be reproduced expert, in full, without prior approval of the Company. Any unauthorized alteration, forgery or falsification of the content or appearance of this test report is unlawful and offenders may be prosecuted to the fullest extent of the law.
この試験報告書は裏面に記載された、もしくは http://www.sgs.com で入手が可能なサービスに関する一般的条件に則して発行されます。そちらに明記されている弊社の負うべき債務・補償の範囲及び司法管轄の項目をご注意ください。他に特に明記のない限り、この試験報告書に記載された結果は、試験サンプルのみに属します。この書面全体の複製以外には、弊社からの事前の許可を得ること無く複製することを禁じます。この検査報告書を無断で変更、偽造、改ざんすることは違法であり、違反者に対しては法的手段を講じることになります。

2 Test result and procedure

2.1 EMI requirement

2.1.1 Radiated emissions

[Test setup]

Test setup is implemented according to the method of IEC 60945 "Radiated measurements".

150 kHz - 30 MHz

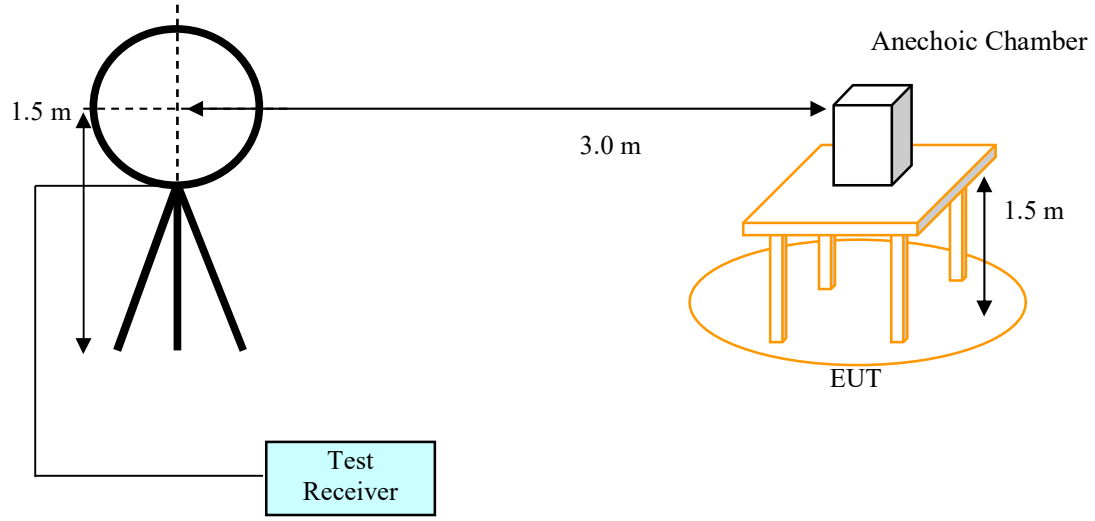

30 MHz - 2 GHz

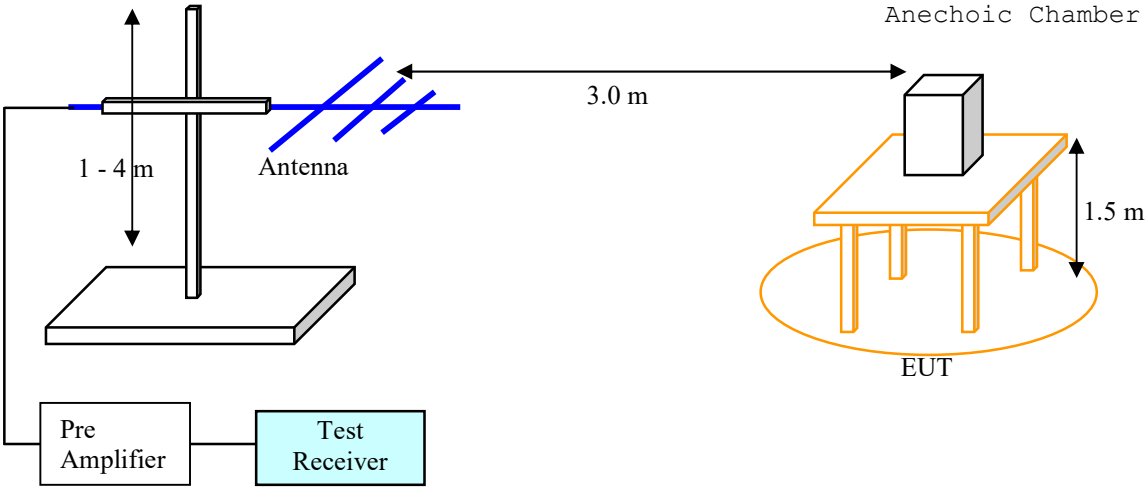

This Test Report is issued by the Company under its General Conditions of Service printed overleaf or available on request and accessible at http://www.sgs.com. Attention is drawn to the limitation of liability, indemnification and jurisdiction issues defined therein. Unless otherwise stated the results shown in this Test Report refer only to the sample(s) tested. This Test Report cannot be reproduced expert, in full, without prior approval of the Company. Any unauthorized alteration, forgery or falsification of the content or appearance of this test report is unlawful and offenders may be prosecuted to the fullest extent of the law.
この試験報告書は裏面に記載された、もしくは http://www.sgs.com で入手が可能なサービスに関する一般的条件に則して発行されます。そちらに明記されている弊社の負うべき債務・補償の範囲及び司法管轄の項目をご注意ください。他に特に明記のない限り、この試験報告書に記載された結果は、試験サンプルのみに属します。この書面全体の複製以外には、弊社からの事前の許可を得ること無く複製することを禁じます。この検査報告書を無断で変更、偽造、改ざんすることは違法であり、違反者に対しては法的手段を講じることになります。

[Test method]

The test method shall be in accordance with IEC 60945.
The ancillary equipment shall be tested under operational conditions typical for its normal use. If these conditions cannot be achieved without connection to the radio equipment, then the ancillary equipment shall be tested in combination with the radio equipment to the related requirements for the enclosure radiation in the relevant radio product standard for the effective use of the radio spectrum.

The EUT shall be placed on a non-conductive support with a height of 1.5 m. The measuring distance between the centre of the test antenna and the EUT shall be 3 m. A test site in accordance with IEC 60945 and CISPR 16-1-1 shall be used.

The measuring bandwidth shall be in accordance with a table below.

Table: Measuring bandwidth for radiated emissions

Frequency Range	Measuring bandwidth
30 MHz to 2 GHz	120 kHz
156 MHz to 165 MHz	9 kHz
150 kHz to 30 MHz	9 kHz

The setting of controls which may affect the level of radiated interference shall be varied in order to ascertain the maximum emission level.

When the EUT consists of more than one unit the interconnecting cables shall have the maximum length and type as indicated by the manufacturer. Available input and output ports of the ancillary equipment under test shall be connected to the maximum length of cable as indicated by the manufacturer and terminated to simulate the impedance of the relevant ports of the radio equipment. These cables shall be bundled at the approximate centre of the cable with the bundles of 30 cm to 40 cm in length running in the horizontal plane from the port to which it is connected. If it is impractical to do so because of cable bulk or stiffness, the disposition of the excess cable shall be precisely noted in the test report.
The emissions shall be measured in the frequency range of 150 kHz to 2 GHz in accordance with CISPR 16-1-1 using the measuring receiver or a comparable spectrum analyzer. During the measurements up to 2 GHz the quasi-peak detector shall be used.

In addition, for the frequency band 156 MHz to 165 MHz, the measurement shall be repeated with a receiver bandwidth of 9 kHz to 10 kHz. The equipment shall meet both, the quasi peak and the peak emission limits set out in table below.

This Test Report is issued by the Company under its General Conditions of Service printed overleaf or available on request and accessible at http://www.sgs.com. Attention is drawn to the limitation of liability, indemnification and jurisdiction issues defined therein. Unless otherwise stated the results shown in this Test Report refer only to the sample(s) tested. This Test Report cannot be reproduced expert, in full, without prior approval of the Company. Any unauthorized alteration, forgery or falsification of the content or appearance of this test report is unlawful and offenders may be prosecuted to the fullest extent of the law.
この試験報告書は裏面に記載された、もしくは http://www.sgs.com で入手が可能なサービスに関する一般的条件に則して発行されます。そちらに明記されている弊社の負うべき債務・補償の範囲及び司法管轄の項目をご注意ください。他に特に明記のない限り、この試験報告書に記載された結果は、試験サンプルのみに属します。この書面全体の複製以外には、弊社からの事前の許可を得ること無く複製することを禁じます。この検査報告書を無断で変更、偽造、改ざんすることは違法であり、違反者に対しては法的手段を講じることになります。

[Limits]

The levels of field strength of any radiated emission from the enclosure of the EUT in the frequency range 150 kHz to 2 GHz shall not exceed the values given in table below.

Table: EMC emission limits

Frequency range	Limit (QP) [dBμV/m]	Limit (PK) [dBμV/m]	Measuring distance
150 kHz - 300 kHz	80 - 52	-	3 m
300 kHz - 30 MHz	52 - 34	-	3 m
30 MHz - 1 GHz	54	-	3 m
1 GHz - 2 GHz	54	-	3 m
156 MHz - 165 MHz	24	30	3 m

[Test equipment used (refer to List of utilized test equipment)]

AC01(EM)	AC01(EG)	BA07	CL11	CL30	CL38
LP06	PR21	PR12	TR06	DH06	

[Test result] - ***Complied with requirement***

[Test Date]

Tested Date: 31 Oct. 2019 Temperature: 21 degC
Humidity: 62 % Atmos. Press: 1020 hPa

[Test Result]

Range 1: 150 kHz - 30 MHz

Operating mode: Rx 16ch

No.	Frequency [MHz]	Reading [dBμV]	Antenna [dB/m]	Loss [dB]	Gain [dB]	Result [dBμV/m]	Limit [dBμV/m]	Margin [dB]	Ant. [deg]
-	-	-	-	-	-	-	-	-	-
-	-	-	-	-	-	-	-	-	-

Note: All emissions were under noise floor.

Operating mode: Rx 70ch

No.	Frequency [MHz]	Reading [dBμV]	Antenna [dB/m]	Loss [dB]	Gain [dB]	Result [dBμV/m]	Limit [dBμV/m]	Margin [dB]	Ant. [deg]
-	-	-	-	-	-	-	-	-	-
-	-	-	-	-	-	-	-	-	-

Note: All emissions were under noise floor.

This Test Report is issued by the Company under its General Conditions of Service printed overleaf or available on request and accessible at http://www.sgs.com. Attention is drawn to the limitation of liability, indemnification and jurisdiction issues defined therein. Unless otherwise stated the results shown in this Test Report refer only to the sample(s) tested. This Test Report cannot be reproduced expert, in full, without prior approval of the Company. Any unauthorized alteration, forgery or falsification of the content or appearance of this test report is unlawful and offenders may be prosecuted to the fullest extent of the law.
この試験報告書は裏面に記載された、もしくは http://www.sgs.com で入手が可能なサービスに関する一般的条件に則して発行されます。そちらに明記されている弊社の負うべき債務・補償の範囲及び司法管轄の項目をご注意ください。他に特に明記のない限り、この試験報告書に記載された結果は、試験サンプルのみに属します。この書面全体の複製以外には、弊社からの事前の許可を得ること無く複製することを禁じます。この検査報告書を無断で変更、偽造、改ざんすることは違法であり、違反者に対しては法的手段を講じることになります。

Operating mode: Tx 16ch

No.	Frequency [MHz]	Reading [dBμV]	Antenna [dB/m]	Loss [dB]	Gain [dB]	Result [dBμV/m]	Limit [dBμV/m]	Margin [dB]	Ant. [deg]
-	-	-	-	-	-	-	-	-	-
-	-	-	-	-	-	-	-	-	-

Note: All emissions were under noise floor.

[Graph]

Operating mode: Tx 16ch (Worst)

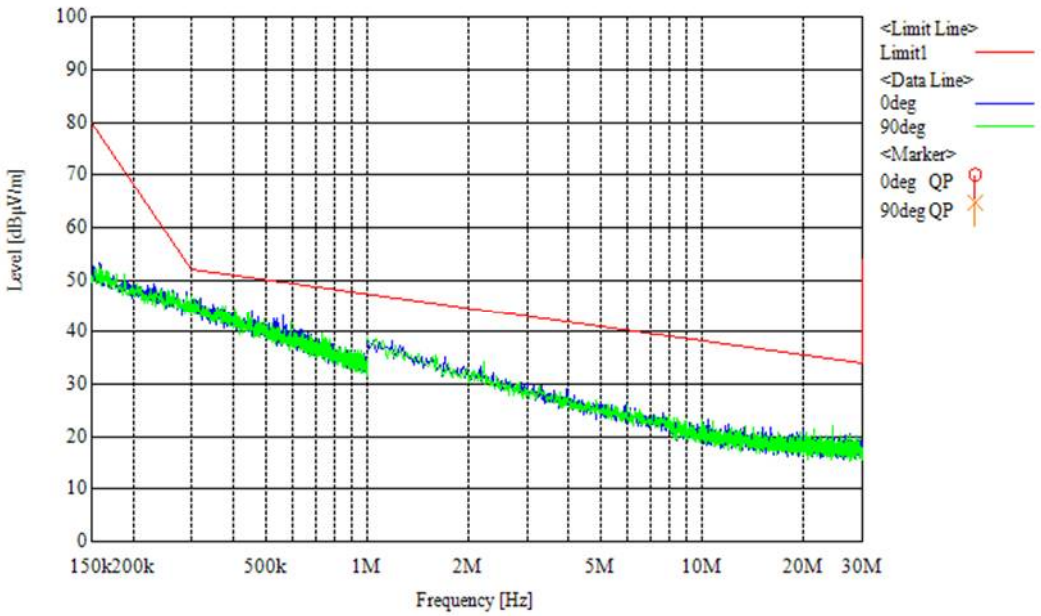

This Test Report is issued by the Company under its General Conditions of Service printed overleaf or available on request and accessible at http://www.sgs.com. Attention is drawn to the limitation of liability, indemnification and jurisdiction issues defined therein. Unless otherwise stated the results shown in this Test Report refer only to the sample(s) tested. This Test Report cannot be reproduced expert, in full, without prior approval of the Company. Any unauthorized alteration, forgery or falsification of the content or appearance of this test report is unlawful and offenders may be prosecuted to the fullest extent of the law.
この試験報告書は裏面に記載された、もしくは http://www.sgs.com で入手が可能なサービスに関する一般的条件に則して発行されます。そちらに明記されている弊社の負うべき債務・補償の範囲及び司法管轄の項目をご注意ください。他に特に明記のない限り、この試験報告書に記載された結果は、試験サンプルのみに属します。この書面全体の複製以外には、弊社からの事前の許可を得ること無く複製することを禁じます。この検査報告書を無断で変更、偽造、改ざんすることは違法であり、違反者に対しては法的手段を講じることになります。

Range 2: 30 MHz - 1000 MHz

Operating mode: Rx 16ch

No.	Freq. [MHz]	Reading [dBμV]	Factor [dB/m]	Loss [dB]	Gain [dB]	Result [dBμV/m]	Limit [dBμV/m]	Margin [dB]	Ant.
1	229.625	37.9	12.1	8.9	30.2	28.7	54.0	25.3	Hori.
2	505.600	34.9	17.4	10.9	30.1	33.1	54.0	20.9	Hori.
3	688.874	33.3	18.7	11.8	30.2	33.6	54.0	20.4	Hori.
4	803.499	36.8	19.8	12.2	29.9	38.9	54.0	15.1	Hori.
5	229.625	39.2	12.1	8.9	30.2	30.0	54.0	24.0	Vert.
6	505.600	35.3	17.4	10.9	30.1	33.5	54.0	20.5	Vert.
7	632.000	31.7	18.6	11.5	30.2	31.6	54.0	22.4	Vert.
8	688.874	34.9	18.7	11.8	30.2	35.2	54.0	18.8	Vert.
9	803.499	33.1	19.8	12.2	29.9	35.2	54.0	18.8	Vert.

Operating mode: Rx 70ch

No.	Freq. [MHz]	Reading [dBμV]	Factor [dB/m]	Loss [dB]	Gain [dB]	Result [dBμV/m]	Limit [dBμV/m]	Margin [dB]	Ant.
1	504.500	35.3	17.4	10.9	30.1	33.5	54.0	20.5	Hori.
2	630.625	29.2	18.6	11.5	30.2	29.1	54.0	24.9	Hori.
3	688.874	33.4	18.7	11.8	30.2	33.7	54.0	20.3	Hori.
4	803.499	36.8	19.8	12.2	29.9	38.9	54.0	15.1	Hori.
5	229.625	39.1	12.1	8.9	30.2	29.9	54.0	24.1	Vert.
6	504.500	34.1	17.4	10.9	30.1	32.3	54.0	21.7	Vert.
7	630.625	31.6	18.6	11.5	30.2	31.5	54.0	22.5	Vert.
8	688.874	35.0	18.7	11.8	30.2	35.3	54.0	18.7	Vert.
9	803.499	32.6	19.8	12.2	29.9	34.7	54.0	19.3	Vert.
10	882.875	29.1	20.3	12.5	29.4	32.5	54.0	21.5	Vert.

Operating mode: Tx 16ch

No.	Freq. [MHz]	Reading [dBμV]	Factor [dB/m]	Loss [dB]	Gain [dB]	Result [dBμV/m]	Limit [dBμV/m]	Margin [dB]	Ant.
-	-	-	-	-	-	-	-	-	-
-	-	-	-	-	-	-	-	-	-

Note: All emissions were under noise floor.

This Test Report is issued by the Company under its General Conditions of Service printed overleaf or available on request and accessible at http://www.sgs.com. Attention is drawn to the limitation of liability, indemnification and jurisdiction issues defined therein. Unless otherwise stated the results shown in this Test Report refer only to the sample(s) tested. This Test Report cannot be reproduced expert, in full, without prior approval of the Company. Any unauthorized alteration, forgery or falsification of the content or appearance of this test report is unlawful and offenders may be prosecuted to the fullest extent of the law.
この試験報告書は裏面に記載された、もしくは http://www.sgs.com で入手が可能なサービスに関する一般的条件に則して発行されます。そちらに明記されている弊社の負うべき債務・補償の範囲及び司法管轄の項目をご注意ください。他に特に明記のない限り、この試験報告書に記載された結果は、試験サンプルのみに属します。この書面全体の複製以外には、弊社からの事前の許可を得ること無く複製することを禁じます。この検査報告書を無断で変更、偽造、改ざんすることは違法であり、違反者に対しては法的手段を講じることになります。

[Graph]

Operating mode: Rx 16ch (Worst)

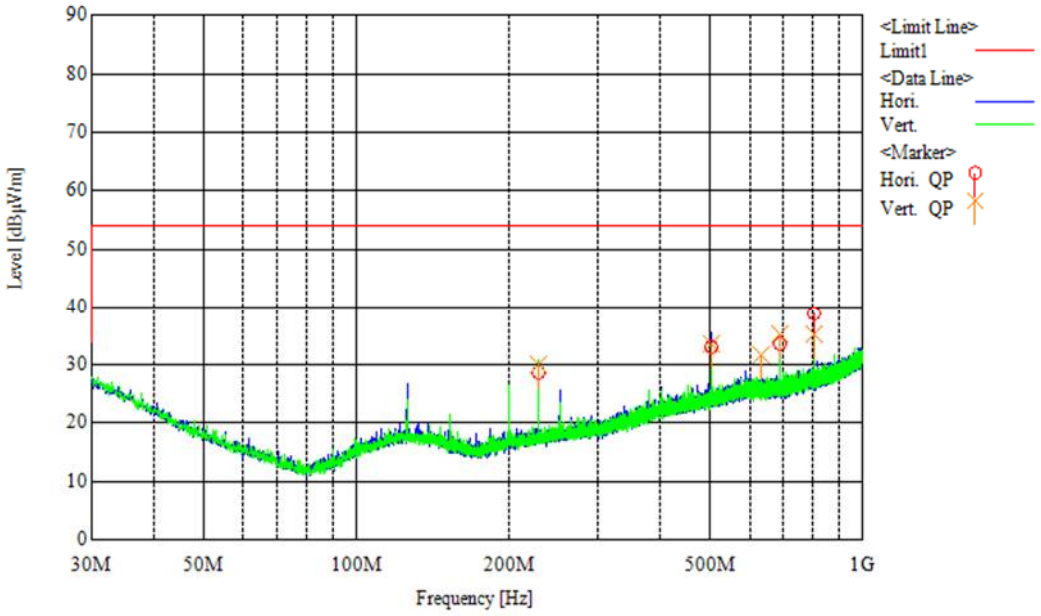

This Test Report is issued by the Company under its General Conditions of Service printed overleaf or available on request and accessible at http://www.sgs.com. Attention is drawn to the limitation of liability, indemnification and jurisdiction issues defined therein. Unless otherwise stated the results shown in this Test Report refer only to the sample(s) tested. This Test Report cannot be reproduced expert, in full, without prior approval of the Company. Any unauthorized alteration, forgery or falsification of the content or appearance of this test report is unlawful and offenders may be prosecuted to the fullest extent of the law.
この試験報告書は裏面に記載された、もしくは http://www.sgs.com で入手が可能なサービスに関する一般的条件に則して発行されます。そちらに明記されている弊社の負うべき債務・補償の範囲及び司法管轄の項目をご注意ください。他に特に明記のない限り、この試験報告書に記載された結果は、試験サンプルのみに属します。この書面全体の複製以外には、弊社からの事前の許可を得ること無く複製することを禁じます。この検査報告書を無断で変更、偽造、改ざんすることは違法であり、違反者に対しては法的手段を講じることになります。

Range 3: 1000 MHz - 2000 MHz

Operating mode: Rx 16ch

No.	Freq. [MHz]	Reading [dBμV]	C.Factor [dB/m]	Result [dBμV/m]	Limit [dBμV/m]	Margin [dB]	Ant.
1	1406.124	48.5	-9.1	39.4	54.0	14.6	Hori.
2	1606.999	46.7	-8.6	38.1	54.0	15.9	Hori.
3	1807.873	55.3	-8.0	47.3	54.0	6.7	Hori.
4	1406.124	49.5	-9.1	40.4	54.0	13.6	Vert.
5	1606.999	49.7	-8.6	41.1	54.0	12.9	Vert.
6	1807.873	56.9	-8.0	48.9	54.0	5.1	Vert.
7	1836.998	49.6	-7.9	41.7	54.0	12.3	Vert.

Operating mode: Rx 70ch

No.	Freq. [MHz]	Reading [dBμV]	C.Factor [dB/m]	Result [dBμV/m]	Limit [dBμV/m]	Margin [dB]	Ant.
1	1406.124	48.8	-9.1	39.7	54.0	14.3	Hori.
2	1807.873	55.5	-8.0	47.5	54.0	6.5	Hori.
3	1406.124	49.8	-9.1	40.7	54.0	13.3	Vert.
4	1606.998	49.7	-8.6	41.1	54.0	12.9	Vert.
5	1807.873	57.1	-8.0	49.1	54.0	4.9	Vert.
6	1836.998	49.6	-7.9	41.7	54.0	12.3	Vert.

Operating mode: Tx 16ch

No.	Freq. [MHz]	Reading [dBμV]	C.Factor [dB/m]	Result [dBμV/m]	Limit [dBμV/m]	Margin [dB]	Ant.
-	-	-	-	-	-	-	-
-	-	-	-	-	-	-	-

Note: All emissions are under noise floor.

This Test Report is issued by the Company under its General Conditions of Service printed overleaf or available on request and accessible at http://www.sgs.com. Attention is drawn to the limitation of liability, indemnification and jurisdiction issues defined therein. Unless otherwise stated the results shown in this Test Report refer only to the sample(s) tested. This Test Report cannot be reproduced expert, in full, without prior approval of the Company. Any unauthorized alteration, forgery or falsification of the content or appearance of this test report is unlawful and offenders may be prosecuted to the fullest extent of the law.
この試験報告書は裏面に記載された、もしくは http://www.sgs.com で入手が可能なサービスに関する一般的条件に則して発行されます。そちらに明記されている弊社の負うべき債務・補償の範囲及び司法管轄の項目をご注意ください。他に特に明記のない限り、この試験報告書に記載された結果は、試験サンプルのみに属します。この書面全体の複製以外には、弊社からの事前の許可を得ること無く複製することを禁じます。この検査報告書を無断で変更、偽造、改ざんすることは違法であり、違反者に対しては法的手段を講じることになります。

[Graph]

Operating mode: Rx 70ch (Worst)

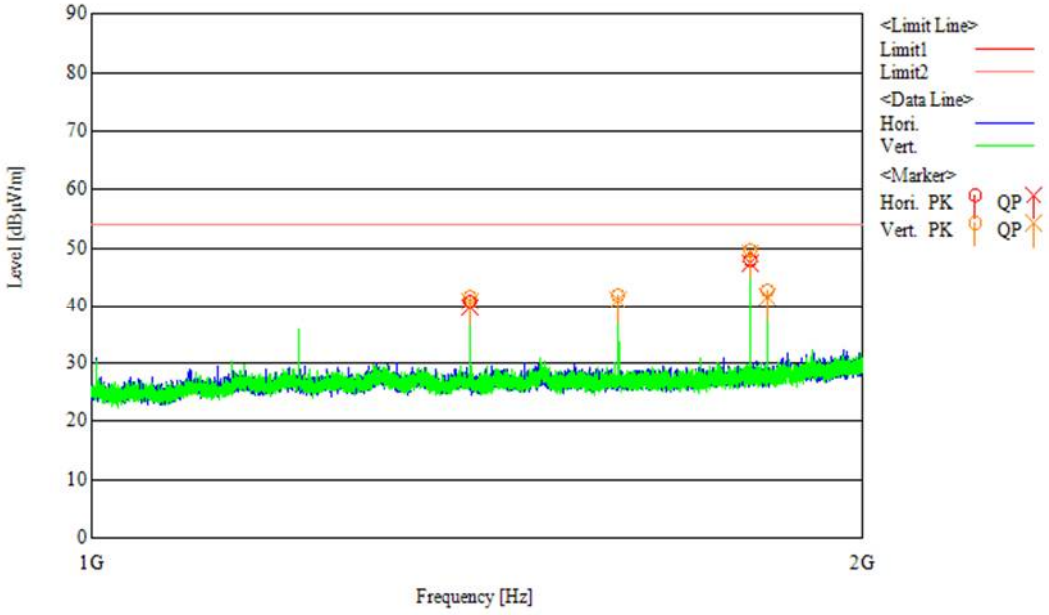

This Test Report is issued by the Company under its General Conditions of Service printed overleaf or available on request and accessible at http://www.sgs.com. Attention is drawn to the limitation of liability, indemnification and jurisdiction issues defined therein. Unless otherwise stated the results shown in this Test Report refer only to the sample(s) tested. This Test Report cannot be reproduced expert, in full, without prior approval of the Company. Any unauthorized alteration, forgery or falsification of the content or appearance of this test report is unlawful and offenders may be prosecuted to the fullest extent of the law.
この試験報告書は裏面に記載された、もしくは http://www.sgs.com で入手が可能なサービスに関する一般的条件に則して発行されます。そちらに明記されている弊社の負うべき債務・補償の範囲及び司法管轄の項目をご注意ください。他に特に明記のない限り、この試験報告書に記載された結果は、試験サンプルのみに属します。この書面全体の複製以外には、弊社からの事前の許可を得ること無く複製することを禁じます。この検査報告書を無断で変更、偽造、改ざんすることは違法であり、違反者に対しては法的手段を講じることになります。

Range 4: 156 MHz - 165 MHz

Operating mode: Rx 16ch

No.	Freq. [MHz]	Reading PK [dBμV]	Reading QP [dBμV]	Correct. Factor [dB/m]	Result PK [dBμV/m]	Result QP [dBμV/m]	Limit PK [dBμV/m]	Limit QP [dBμV/m]	Margin PK [dB]	Margin QP [dB]	Ant.
1	163.200	20.3	16.2	-11.3	9.0	4.9	30.0	24.0	21.0	19.1	Hori.

Operating mode: Rx 70ch

No.	Freq. [MHz]	Reading PK [dBμV]	Reading QP [dBμV]	Correct. Factor [dB/m]	Result PK [dBμV/m]	Result QP [dBμV/m]	Limit PK [dBμV/m]	Limit QP [dBμV/m]	Margin PK [dB]	Margin QP [dB]	Ant.
1	163.200	21.0	17.3	-11.3	9.7	6.0	30.0	24.0	20.3	18.0	Hori.

Operating mode: Tx 16ch

No.	Freq. [MHz]	Reading PK [dBμV]	Reading QP [dBμV]	Correct. Factor [dB/m]	Result PK [dBμV/m]	Result QP [dBμV/m]	Limit PK [dBμV/m]	Limit QP [dBμV/m]	Margin PK [dB]	Margin QP [dB]	Ant.
1	163.200	20.3	16.6	-11.3	9.0	5.3	30.0	24.0	21.0	18.7	Hori.

[Graph]

Operating mode: Rx 70ch (Worst)

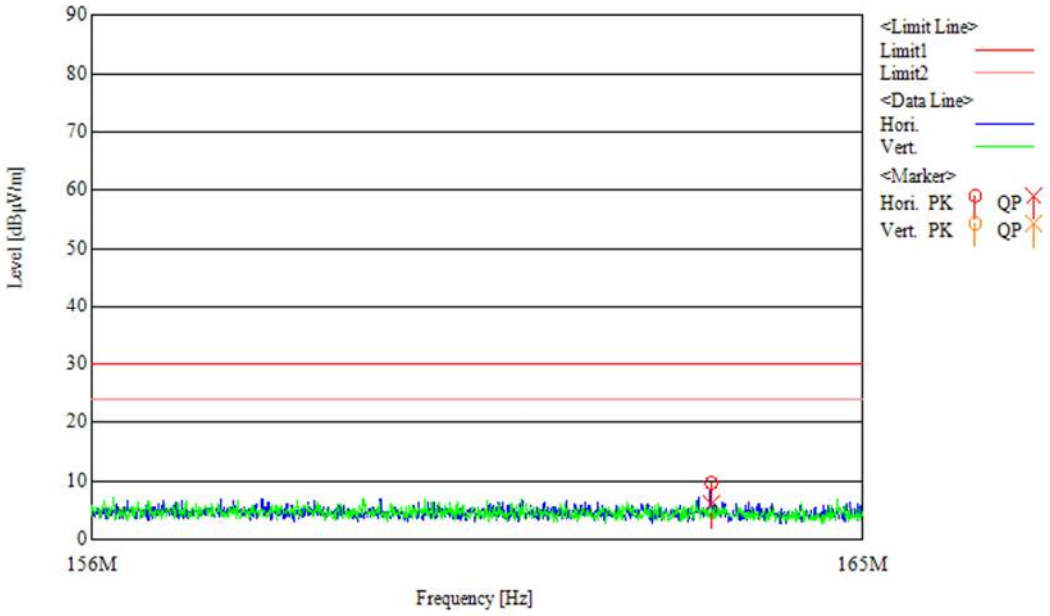

This Test Report is issued by the Company under its General Conditions of Service printed overleaf or available on request and accessible at http://www.sgs.com. Attention is drawn to the limitation of liability, indemnification and jurisdiction issues defined therein. Unless otherwise stated the results shown in this Test Report refer only to the sample(s) tested. This Test Report cannot be reproduced expert, in full, without prior approval of the Company. Any unauthorized alteration, forgery or falsification of the content or appearance of this test report is unlawful and offenders may be prosecuted to the fullest extent of the law.
この試験報告書は裏面に記載された、もしくは http://www.sgs.com で入手が可能なサービスに関する一般的条件に則して発行されます。そちらに明記されている弊社の負うべき債務・補償の範囲及び司法管轄の項目をご注意ください。他に特に明記のない限り、この試験報告書に記載された結果は、試験サンプルのみに属します。この書面全体の複製以外には、弊社からの事前の許可を得ること無く複製することを禁じます。この検査報告書を無断で変更、偽造、改ざんすることは違法であり、違反者に対しては法的手段を講じることになります。

2.1.2 Conducted emissions

[Test Method]

The test method shall be in accordance with IEC 60945.

This test shall be performed on a representative configuration of the EUT in both, the receive and the transmit mode of operation, as appropriate.

The power input cable between DC input ports of the EUT and the Artificial Mains Network (AMN) shall be screened and not exceed 0.8 m in length.

If the EUT consists of more than one unit with individual DC power input ports, power input ports of identical nominal supply voltages shall be connected in parallel to the artificial mains network.

The setting of controls which may affect the level of conducted interference shall be varied in order to ascertain the maximum emission level.

The measuring bandwidth shall be:
- 200 Hz in the frequency range 10 kHz to 150 kHz
- 9 kHz in the frequency range 150 kHz to 30 MHz.

The measurement frequency range extends from 10 kHz to 30 MHz. When the EUT is a transmitter operating at frequencies below 30 MHz, then the exclusion band for transmitters applies (see clause 4.3) for measurements in the transmit mode of operation.

Test setup is implemented according to the method of IEC 60945 "Conducted measurements".

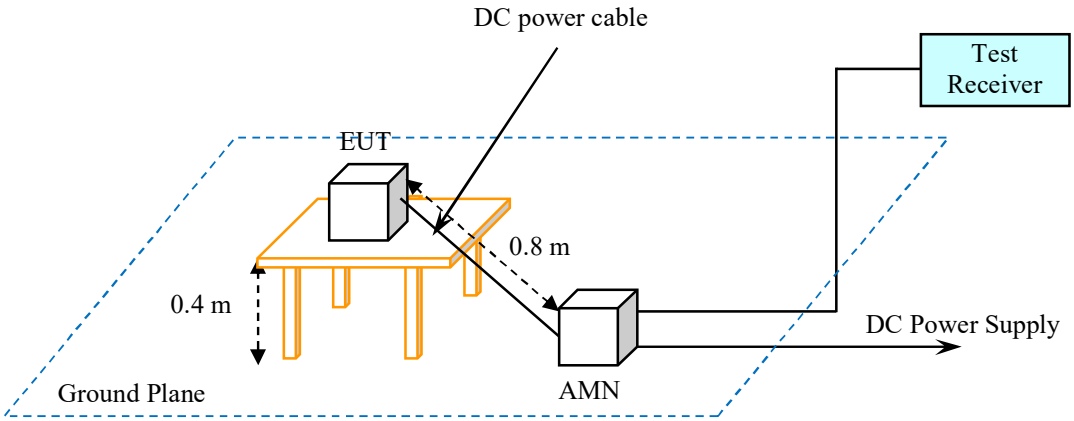

This Test Report is issued by the Company under its General Conditions of Service printed overleaf or available on request and accessible at http://www.sgs.com. Attention is drawn to the limitation of liability, indemnification and jurisdiction issues defined therein. Unless otherwise stated the results shown in this Test Report refer only to the sample(s) tested. This Test Report cannot be reproduced expert, in full, without prior approval of the Company. Any unauthorized alteration, forgery or falsification of the content or appearance of this test report is unlawful and offenders may be prosecuted to the fullest extent of the law.
この試験報告書は裏面に記載された、もしくは http://www.sgs.com で入手が可能なサービスに関する一般的条件に則して発行されます。そちらに明記されている弊社の負うべき債務・補償の範囲及び司法管轄の項目をご注意ください。他に特に明記のない限り、この試験報告書に記載された結果は、試験サンプルのみに属します。この書面全体の複製以外には、弊社からの事前の許可を得ること無く複製することを禁じます。この検査報告書を無断で変更、偽造、改ざんすることは違法であり、違反者に対しては法的手段を講じることになります。

[Limits]

The level of any conducted spurious signal shall not exceed the values given in below table.

Frequency range	Limit (QP) [dBμV]
10 kHz - 150 kHz	96 - 50
150 kHz - 350 kHz	60 - 50
350 kHz - 30 MHz	50

[Test equipment used (refer to List of utilized test equipment)]

TR06	LN18	CL11			

[Test result] - ***Complied with requirement***

[Test Date]

Tested Date: 30 Oct. 2019 Temperature: 21 degC
Humidity: 60 % Atmos. Press: 1018 hPa

[Test Data]

Tested line: DC power line

Operating mode: Rx 16ch

No.	Frequency [MHz]	Reading [dB]	LISN [dB]	Loss [dB]	Gain [dB]	Result [dBμV]	Limit [dBμV]	Margin [dB]	Phase
-	-	-	-	-	-	-	-	-	-
-	-	-	-	-	-	-	-	-	-

Note: All emissions have more than 20 dB margin.

The power line conducted emission voltage is calculated by adding the LISN factor and the cable loss attenuation from the measured reading. The calculation is as follows:

Result = Reading + C. F
where C.F = LISN Factor + Cable Loss + Gain [dB]

This Test Report is issued by the Company under its General Conditions of Service printed overleaf or available on request and accessible at http://www.sgs.com. Attention is drawn to the limitation of liability, indemnification and jurisdiction issues defined therein. Unless otherwise stated the results shown in this Test Report refer only to the sample(s) tested. This Test Report cannot be reproduced expert, in full, without prior approval of the Company. Any unauthorized alteration, forgery or falsification of the content or appearance of this test report is unlawful and offenders may be prosecuted to the fullest extent of the law.
この試験報告書は裏面に記載された、もしくは http://www.sgs.com で入手が可能なサービスに関する一般的条件に則して発行されます。そちらに明記されている弊社の負うべき債務・補償の範囲及び司法管轄の項目をご注意ください。他に特に明記のない限り、この試験報告書に記載された結果は、試験サンプルのみに属します。この書面全体の複製以外には、弊社からの事前の許可を得ること無く複製することを禁じます。この検査報告書を無断で変更、偽造、改ざんすることは違法であり、違反者に対しては法的手段を講じることになります。

Operating mode: Rx 70ch

No.	Frequency [MHz]	Reading [dB]	LISN [dB]	Loss [dB]	Gain [dB]	Result [dBμV]	Limit [dBμV]	Margin [dB]	Phase
-	-	-	-	-	-	-	-	-	-
-	-	-	-	-	-	-	-	-	-

Note: All emissions have more than 20 dB margin.

Operating mode: Tx 16ch

No.	Frequency [MHz]	Reading [dB]	LISN [dB]	Loss [dB]	Gain [dB]	Result [dBμV]	Limit [dBμV]	Margin [dB]	Phase
-	-	-	-	-	-	-	-	-	-
-	-	-	-	-	-	-	-	-	-

Note: All emissions have more than 20 dB margin.

[Graph]

Operating mode: Rx 16ch (Worst)

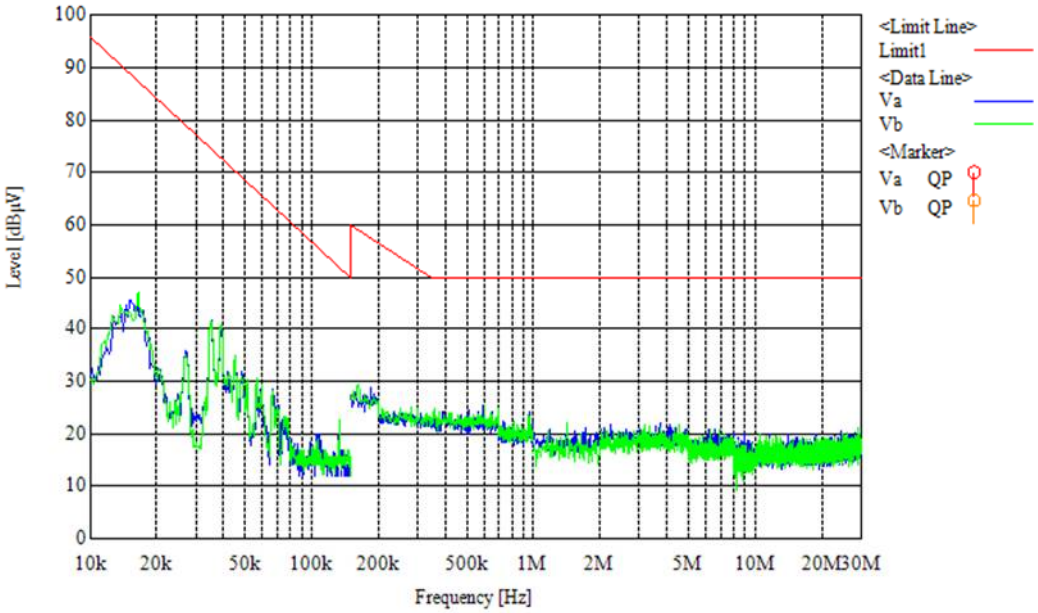

This Test Report is issued by the Company under its General Conditions of Service printed overleaf or available on request and accessible at http://www.sgs.com. Attention is drawn to the limitation of liability, indemnification and jurisdiction issues defined therein. Unless otherwise stated the results shown in this Test Report refer only to the sample(s) tested. This Test Report cannot be reproduced expert, in full, without prior approval of the Company. Any unauthorized alteration, forgery or falsification of the content or appearance of this test report is unlawful and offenders may be prosecuted to the fullest extent of the law.
この試験報告書は裏面に記載された、もしくは http://www.sgs.com で入手が可能なサービスに関する一般的条件に則して発行されます。そちらに明記されている弊社の負うべき債務・補償の範囲及び司法管轄の項目をご注意ください。他に特に明記のない限り、この試験報告書に記載された結果は、試験サンプルのみに属します。この書面全体の複製以外には、弊社からの事前の許可を得ること無く複製することを禁じます。この検査報告書を無断で変更、偽造、改ざんすることは違法であり、違反者に対しては法的手段を講じることになります。

2.2 EMS requirement

2.2.1 Radiated disturbance

[Test Condition]

Test level:	10 V/m
Frequency range:	80 - 2000 MHz
Modulation:	Amplitude, 400 Hz, 80 %
Frequency step size:	1.0 %
Dwell time:	3 s (80 - 1000 MHz), 9 s (1000 - 2000 MHz)
Field orientation:	Horizontal and vertical
Performance criteria:	A

[Test equipment used (refer to List of utilized test equipment)]

AC01(IM)	AC01(IG)	EM10	LA03	SL02	SG05	RP07
RP13	CL19	RC05				

[Test result] - ***Complied with requirement***

[Test Date 1]

Tested Date:	28 Oct. 2019	Temperature:	22 degC
Humidity:	61 %	Atmos. Press:	1019 hPa

[Test Date 2]

Tested Date:	29 Oct. 2019	Temperature:	22 degC
Humidity:	57 %	Atmos. Press:	1018 hPa

[Test Data]

Operating Mode	Frequency	Test voltage	Criteria	Antenna Polarization	Result
Rx 16ch	80 – 2000 MHz	10 V/m	A	Hori./Vert.	Pass
Rx 70ch	80 – 2000 MHz	10 V/m	A	Hori./Vert.	Pass
Tx 16ch	80 – 2000 MHz	10 V/m	A	Hori./Vert.	Pass

This Test Report is issued by the Company under its General Conditions of Service printed overleaf or available on request and accessible at http://www.sgs.com. Attention is drawn to the limitation of liability, indemnification and jurisdiction issues defined therein. Unless otherwise stated the results shown in this Test Report refer only to the sample(s) tested. This Test Report cannot be reproduced expert, in full, without prior approval of the Company. Any unauthorized alteration, forgery or falsification of the content or appearance of this test report is unlawful and offenders may be prosecuted to the fullest extent of the law.
この試験報告書は裏面に記載された、もしくは http://www.sgs.com で入手が可能なサービスに関する一般的条件に則して発行されます。そちらに明記されている弊社の負うべき債務・補償の範囲及び司法管轄の項目をご注意ください。他に特に明記のない限り、この試験報告書に記載された結果は、試験サンプルのみに属します。この書面全体の複製以外には、弊社からの事前の許可を得ること無く複製することを禁じます。この検査報告書を無断で変更、偽造、改ざんすることは違法であり、違反者に対しては法的手段を講じることになります。

[Graph (Worst)]

Operating condition: Rx 16ch
Test condition: Back / Horizontal

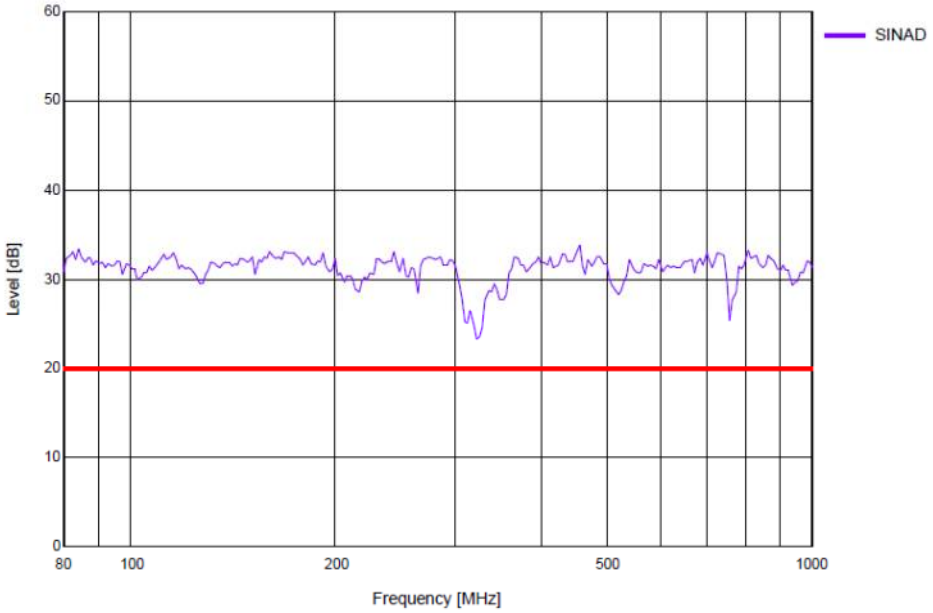

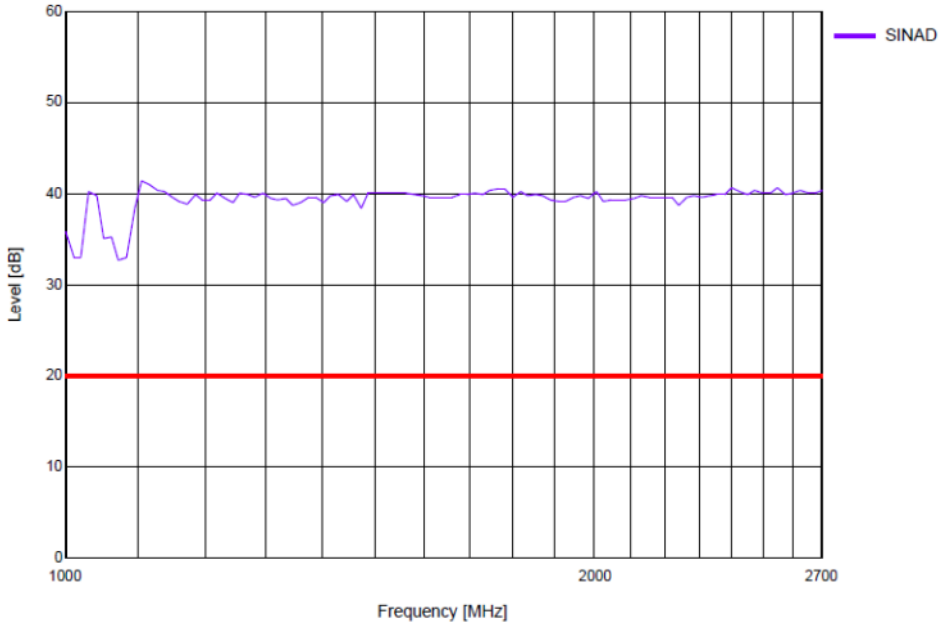

Note: This test was applied up to 2700 MHz since the result will be used in common with EN 301 843-2 testing.

This Test Report is issued by the Company under its General Conditions of Service printed overleaf or available on request and accessible at http://www.sgs.com. Attention is drawn to the limitation of liability, indemnification and jurisdiction issues defined therein. Unless otherwise stated the results shown in this Test Report refer only to the sample(s) tested. This Test Report cannot be reproduced expert, in full, without prior approval of the Company. Any unauthorized alteration, forgery or falsification of the content or appearance of this test report is unlawful and offenders may be prosecuted to the fullest extent of the law.
この試験報告書は裏面に記載された、もしくは http://www.sgs.com で入手が可能なサービスに関する一般的条件に則して発行されます。そちらに明記されている弊社の負うべき債務・補償の範囲及び司法管轄の項目をご注意ください。他に特に明記のない限り、この試験報告書に記載された結果は、試験サンプルのみに属します。この書面全体の複製以外には、弊社からの事前の許可を得ること無く複製することを禁じます。この検査報告書を無断で変更、偽造、改ざんすることは違法であり、違反者に対しては法的手段を講じることになります。

2.2.2 Electrostatic discharge

[Test condition]

Test levels: ± 6.0 kV (Contact discharge)
± 8.0 kV (Air discharge)
Number of discharges: 10 for each polarity
Performance criteria: B

[Test equipment used (refer to List of utilized test equipment)]

ES04					

[Test result] - ***Complied with requirement***

[Test Date]

Tested Date: 30 Oct. 2019 Temperature: 24 degC
Humidity: 42 % Atmos. Press: 1018 hPa

[Test Data]

Operating mode: Rx 16ch

Discharge method	Coupling of interference	Test voltage	Criteria	Result
Contact discharge	VCP / HCP	± 2 kV, ± 4 kV,± 6 kV	B	Pass
Air discharge	EUT	± 2 kV, ± 4 kV,± 8 kV	B	Pass
Contact discharge	EUT	± 2 kV, ± 4 kV,± 6 kV	B	Pass

VCP: Vertical coupling panel
HCP: Horizontal coupling panel
The discharge points of the EUT show the following photographs. (Refer to Sec 3.2.3)

Operating mode: Rx 70ch

Discharge method	Coupling of interference	Test voltage	Criteria	Result
Contact discharge	VCP / HCP	± 2 kV, ± 4 kV,± 6 kV	B	Pass
Air discharge	EUT	± 2 kV, ± 4 kV,± 8 kV	B	Pass
Contact discharge	EUT	± 2 kV, ± 4 kV,± 6 kV	B	Pass

Operating mode: Tx 16ch

Discharge method	Coupling of interference	Test voltage	Criteria	Result
Contact discharge	VCP / HCP	± 2 kV, ± 4 kV,± 6 kV	B	Pass
Air discharge	EUT	± 2 kV, ± 4 kV,± 8 kV	B	Pass
Contact discharge	EUT	± 2 kV, ± 4 kV,± 6 kV	B	Pass

This Test Report is issued by the Company under its General Conditions of Service printed overleaf or available on request and accessible at http://www.sgs.com. Attention is drawn to the limitation of liability, indemnification and jurisdiction issues defined therein. Unless otherwise stated the results shown in this Test Report refer only to the sample(s) tested. This Test Report cannot be reproduced expert, in full, without prior approval of the Company. Any unauthorized alteration, forgery or falsification of the content or appearance of this test report is unlawful and offenders may be prosecuted to the fullest extent of the law.
この試験報告書は裏面に記載された、もしくは http://www.sgs.com で入手が可能なサービスに関する一般的条件に則して発行されます。そちらに明記されている弊社の負うべき債務・補償の範囲及び司法管轄の項目をご注意ください。他に特に明記のない限り、この試験報告書に記載された結果は、試験サンプルのみに属します。この書面全体の複製以外には、弊社からの事前の許可を得ること無く複製することを禁じます。この検査報告書を無断で変更、偽造、改ざんすることは違法であり、違反者に対しては法的手段を講じることになります。

2.2.3 Fast transients (bursts)

[Test condition]

Test level: ± 2.0 kV (AC cable)
± 1.0 kV (Signal / GND Cable)
Repetition rate: 5.0 kHz
Duration of each test: 180 s
Application method: CDN (AC Cable), Capacitive Clamp (Signal / GND Cable)
Performance criterion: B

[Test equipment]

IM04	BC56					

[Test result] - ***Complied with requirement***

[Test Date]

Tested Date: 07 Nov. 2019 Temperature: 20 degC
Humidity: 41 % Atmos. Press: 1016 hPa

[Test Data]

Operating mode: Rx 16ch

Tested Port	Injection	Test voltage	Criteria	Result
Mic. Cable (Main unit side)	Clamp	± 1.0 kV	B	Pass
Mic. Cable (Mic unit side)	Clamp	± 1.0 kV	B	Pass
GPS Cable	Clamp	± 1.0 kV	B	Pass
Remote mic Cable	Clamp	± 1.0 kV	B	Pass
NMEA Cable	Clamp	± 1.0 kV	B	Pass
SP Cable	Clamp	± 1.0 kV	B	Pass
PA Cable	Clamp	± 1.0 kV	B	Pass
GND Cable	Clamp	± 1.0 kV	B	Pass
NMEA2000 Cable	Clamp	± 1.0 kV	B	Pass

This Test Report is issued by the Company under its General Conditions of Service printed overleaf or available on request and accessible at http://www.sgs.com. Attention is drawn to the limitation of liability, indemnification and jurisdiction issues defined therein. Unless otherwise stated the results shown in this Test Report refer only to the sample(s) tested. This Test Report cannot be reproduced expert, in full, without prior approval of the Company. Any unauthorized alteration, forgery or falsification of the content or appearance of this test report is unlawful and offenders may be prosecuted to the fullest extent of the law.
この試験報告書は裏面に記載された、もしくは http://www.sgs.com で入手が可能なサービスに関する一般的条件に則して発行されます。そちらに明記されている弊社の負うべき債務・補償の範囲及び司法管轄の項目をご注意ください。他に特に明記のない限り、この試験報告書に記載された結果は、試験サンプルのみに属します。この書面全体の複製以外には、弊社からの事前の許可を得ること無く複製することを禁じます。この検査報告書を無断で変更、偽造、改ざんすることは違法であり、違反者に対しては法的手段を講じることになります。

Operating mode: Rx 70ch

Tested Port	Injection	Test voltage	Criteria	Result
Mic. Cable (Main unit side)	Clamp	± 1.0 kV	B	Pass
Mic. Cable (Mic unit side)	Clamp	± 1.0 kV	B	Pass
GPS Cable	Clamp	± 1.0 kV	B	Pass
Remote mic Cable	Clamp	± 1.0 kV	B	Pass
NMEA Cable	Clamp	± 1.0 kV	B	Pass
SP Cable	Clamp	± 1.0 kV	B	Pass
PA Cable	Clamp	± 1.0 kV	B	Pass
GND Cable	Clamp	± 1.0 kV	B	Pass
NMEA2000 Cable	Clamp	± 1.0 kV	B	Pass

Operating mode: Tx 16ch

Tested Port	Injection	Test voltage	Criteria	Result
Mic. Cable (Main unit side)	Clamp	± 1.0 kV	B	Pass
Mic. Cable (Mic unit side)	Clamp	± 1.0 kV	B	Pass
GPS Cable	Clamp	± 1.0 kV	B	Pass
Remote mic Cable	Clamp	± 1.0 kV	B	Pass
NMEA Cable	Clamp	± 1.0 kV	B	Pass
SP Cable	Clamp	± 1.0 kV	B	Pass
PA Cable	Clamp	± 1.0 kV	B	Pass
GND Cable	Clamp	± 1.0 kV	B	Pass
NMEA2000 Cable	Clamp	± 1.0 kV	B	Pass

This Test Report is issued by the Company under its General Conditions of Service printed overleaf or available on request and accessible at http://www.sgs.com. Attention is drawn to the limitation of liability, indemnification and jurisdiction issues defined therein. Unless otherwise stated the results shown in this Test Report refer only to the sample(s) tested. This Test Report cannot be reproduced expert, in full, without prior approval of the Company. Any unauthorized alteration, forgery or falsification of the content or appearance of this test report is unlawful and offenders may be prosecuted to the fullest extent of the law.
この試験報告書は裏面に記載された、もしくは http://www.sgs.com で入手が可能なサービスに関する一般的条件に則して発行されます。そちらに明記されている弊社の負うべき債務・補償の範囲及び司法管轄の項目をご注意ください。他に特に明記のない限り、この試験報告書に記載された結果は、試験サンプルのみに属します。この書面全体の複製以外には、弊社からの事前の許可を得ること無く複製することを禁じます。この検査報告書を無断で変更、偽造、改ざんすることは違法であり、違反者に対しては法的手段を講じることになります。

2.2.4 Conducted radio frequency disturbance

[Test condition (sweep)]

Test level:	3 Vrms
Frequency range:	0.15 - 80 MHz
Modulation:	Amplitude, 400 Hz, 80 %
Frequency step size:	1.0 %
Dwell time:	3.0 s
Application method:	CDN (DC/GND Cable), EM clamp (Signal cable)
Performance criterion:	A

[Test condition (spot)]

Test level:	10 V rms
Test Frequency:	2, 3, 4, 6.2, 8.2, 12.6, 16.5, 18.8, 22, 25 MHz
Modulation:	Amplitude, 400 Hz, 80 %
Dwell time:	3.0 s
Application method:	CDN (DC/GND Cable), EM clamp (Signal cable)
Performance criterion:	A

[Test equipment]

CD21	CL65	SG13	RP04	EC01	RC05	CD25

[Test result] - ***Complied with requirement***

[Test Date 1]

Tested Date:	01 Nov. 2019	Temperature:	23 degC
Humidity:	55 %	Atmos. Press:	1017 hPa

[Test Date 2]

Tested Date:	05 Nov. 2019	Temperature:	21 degC
Humidity:	43 %	Atmos. Press:	1018 hPa

[Test Date 3]

Tested Date:	06 Nov. 2019	Temperature:	21 degC
Humidity:	46 %	Atmos. Press:	1017 hPa

This Test Report is issued by the Company under its General Conditions of Service printed overleaf or available on request and accessible at http://www.sgs.com. Attention is drawn to the limitation of liability, indemnification and jurisdiction issues defined therein. Unless otherwise stated the results shown in this Test Report refer only to the sample(s) tested. This Test Report cannot be reproduced expert, in full, without prior approval of the Company. Any unauthorized alteration, forgery or falsification of the content or appearance of this test report is unlawful and offenders may be prosecuted to the fullest extent of the law.
この試験報告書は裏面に記載された、もしくは http://www.sgs.com で入手が可能なサービスに関する一般的条件に則して発行されます。そちらに明記されている弊社の負うべき債務・補償の範囲及び司法管轄の項目をご注意ください。他に特に明記のない限り、この試験報告書に記載された結果は、試験サンプルのみに属します。この書面全体の複製以外には、弊社からの事前の許可を得ること無く複製することを禁じます。この検査報告書を無断で変更、偽造、改ざんすることは違法であり、違反者に対しては法的手段を講じることになります。

[Test Data (Sweep_3V)]

Operating mode: Rx 16ch

Tested Port	Injection	Test voltage	Criteria	Result
Mic. Cable (Main unit side)	EM Clamp	3 Vrms	A	Pass
Mic. Cable (Mic unit side)	EM Clamp	3 Vrms	A	Pass
GPS Cable	EM Clamp	3 Vrms	A	Pass
Remote mic Cable	EM Clamp	3 Vrms	A	Pass
NMEA Cable	EM Clamp	3 Vrms	A	Pass
SP Cable	EM Clamp	3 Vrms	A	Pass
PA Cable	EM Clamp	3 Vrms	A	Pass
DC Cable	CDN	3 Vrms	A	Pass
GND Cable	CDN	3 Vrms	A	Pass
NMEA2000 Cable	EM Clamp	3 Vrms	A	Pass

Operating mode: Rx 70ch

Tested Port	Injection	Test voltage	Criteria	Result
Mic. Cable (Main unit side)	EM Clamp	3 Vrms	A	Pass
Mic. Cable (Mic unit side)	EM Clamp	3 Vrms	A	Pass
GPS Cable	EM Clamp	3 Vrms	A	Pass
Remote mic Cable	EM Clamp	3 Vrms	A	Pass
NMEA Cable	EM Clamp	3 Vrms	A	Pass
SP Cable	EM Clamp	3 Vrms	A	Pass
PA Cable	EM Clamp	3 Vrms	A	Pass
DC Cable	CDN	3 Vrms	A	Pass
GND Cable	CDN	3 Vrms	A	Pass
NMEA2000 Cable	EM Clamp	3 Vrms	A	Pass

This Test Report is issued by the Company under its General Conditions of Service printed overleaf or available on request and accessible at http://www.sgs.com. Attention is drawn to the limitation of liability, indemnification and jurisdiction issues defined therein. Unless otherwise stated the results shown in this Test Report refer only to the sample(s) tested. This Test Report cannot be reproduced expert, in full, without prior approval of the Company. Any unauthorized alteration, forgery or falsification of the content or appearance of this test report is unlawful and offenders may be prosecuted to the fullest extent of the law.
この試験報告書は裏面に記載された、もしくは http://www.sgs.com で入手が可能なサービスに関する一般的条件に則して発行されます。そちらに明記されている弊社の負うべき債務・補償の範囲及び司法管轄の項目をご注意ください。他に特に明記のない限り、この試験報告書に記載された結果は、試験サンプルのみに属します。この書面全体の複製以外には、弊社からの事前の許可を得ること無く複製することを禁じます。この検査報告書を無断で変更、偽造、改ざんすることは違法であり、違反者に対しては法的手段を講じることになります。

Operating mode: Tx 16ch

Tested Port	Injection	Test voltage	Criteria	Result
Mic. Cable (Main unit side)	EM Clamp	3 Vrms	A	Pass
Mic. Cable (Mic unit side)	EM Clamp	3 Vrms	A	Pass
GPS Cable	EM Clamp	3 Vrms	A	Pass
Remote mic Cable	EM Clamp	3 Vrms	A	Pass
NMEA Cable	EM Clamp	3 Vrms	A	Pass
SP Cable	EM Clamp	3 Vrms	A	Pass
PA Cable	EM Clamp	3 Vrms	A	Pass
DC Cable	CDN	3 Vrms	A	Pass
GND Cable	CDN	3 Vrms	A	Pass
NMEA2000 Cable	EM Clamp	3 Vrms	A	Pass

This Test Report is issued by the Company under its General Conditions of Service printed overleaf or available on request and accessible at http://www.sgs.com. Attention is drawn to the limitation of liability, indemnification and jurisdiction issues defined therein. Unless otherwise stated the results shown in this Test Report refer only to the sample(s) tested. This Test Report cannot be reproduced expert, in full, without prior approval of the Company. Any unauthorized alteration, forgery or falsification of the content or appearance of this test report is unlawful and offenders may be prosecuted to the fullest extent of the law.
この試験報告書は裏面に記載された、もしくは http://www.sgs.com で入手が可能なサービスに関する一般的条件に則して発行されます。そちらに明記されている弊社の負うべき債務・補償の範囲及び司法管轄の項目をご注意ください。他に特に明記のない限り、この試験報告書に記載された結果は、試験サンプルのみに属します。この書面全体の複製以外には、弊社からの事前の許可を得ること無く複製することを禁じます。この検査報告書を無断で変更、偽造、改ざんすることは違法であり、違反者に対しては法的手段を講じることになります。

[Test Data (Spot_10V)]

Operating mode: Rx 16ch

Tested Port	Injection	Test voltage	Criteria	Result
Mic. Cable (Main unit side)	EM Clamp	10 Vrms	A	Pass
Mic. Cable (Mic unit side)	EM Clamp	10 Vrms	A	Pass
GPS Cable	EM Clamp	10 Vrms	A	Pass
Remote mic Cable	EM Clamp	10 Vrms	A	Pass
NMEA Cable	EM Clamp	10 Vrms	A	Pass
SP Cable	EM Clamp	10 Vrms	A	Pass
PA Cable	EM Clamp	10 Vrms	A	Pass
DC Cable	CDN	10 Vrms	A	Pass
GND Cable	CDN	10 Vrms	A	Pass
NMEA2000 Cable	EM Clamp	10 Vrms	A	Pass

Operating mode: Rx 70ch

Tested Port	Injection	Test voltage	Criteria	Result
Mic. Cable (Main unit side)	EM Clamp	10 Vrms	A	Pass
Mic. Cable (Mic unit side)	EM Clamp	10 Vrms	A	Pass
GPS Cable	EM Clamp	10 Vrms	A	Pass
Remote mic Cable	EM Clamp	10 Vrms	A	Pass
NMEA Cable	EM Clamp	10 Vrms	A	Pass
SP Cable	EM Clamp	10 Vrms	A	Pass
PA Cable	EM Clamp	10 Vrms	A	Pass
DC Cable	CDN	10 Vrms	A	Pass
GND Cable	CDN	10 Vrms	A	Pass
NMEA2000 Cable	EM Clamp	10 Vrms	A	Pass

This Test Report is issued by the Company under its General Conditions of Service printed overleaf or available on request and accessible at http://www.sgs.com. Attention is drawn to the limitation of liability, indemnification and jurisdiction issues defined therein. Unless otherwise stated the results shown in this Test Report refer only to the sample(s) tested. This Test Report cannot be reproduced expert, in full, without prior approval of the Company. Any unauthorized alteration, forgery or falsification of the content or appearance of this test report is unlawful and offenders may be prosecuted to the fullest extent of the law.
この試験報告書は裏面に記載された、もしくは http://www.sgs.com で入手が可能なサービスに関する一般的条件に則して発行されます。そちらに明記されている弊社の負うべき債務・補償の範囲及び司法管轄の項目をご注意ください。他に特に明記のない限り、この試験報告書に記載された結果は、試験サンプルのみに属します。この書面全体の複製以外には、弊社からの事前の許可を得ること無く複製することを禁じます。この検査報告書を無断で変更、偽造、改ざんすることは違法であり、違反者に対しては法的手段を講じることになります。

Operating mode: Tx 16ch

Tested Port	Injection	Test voltage	Criteria	Result
Mic. Cable (Main unit side)	EM Clamp	10 Vrms	A	Pass
Mic. Cable (Mic unit side)	EM Clamp	10 Vrms	A	Pass
GPS Cable	EM Clamp	10 Vrms	A	Pass
Remote mic Cable	EM Clamp	10 Vrms	A	Pass
NMEA Cable	EM Clamp	10 Vrms	A	Pass
SP Cable	EM Clamp	10 Vrms	A	Pass
PA Cable	EM Clamp	10 Vrms	A	Pass
DC Cable	CDN	10 Vrms	A	Pass
GND Cable	CDN	10 Vrms	A	Pass
NMEA2000 Cable	EM Clamp	10 Vrms	A	Pass

This Test Report is issued by the Company under its General Conditions of Service printed overleaf or available on request and accessible at http://www.sgs.com. Attention is drawn to the limitation of liability, indemnification and jurisdiction issues defined therein. Unless otherwise stated the results shown in this Test Report refer only to the sample(s) tested. This Test Report cannot be reproduced expert, in full, without prior approval of the Company. Any unauthorized alteration, forgery or falsification of the content or appearance of this test report is unlawful and offenders may be prosecuted to the fullest extent of the law.
この試験報告書は裏面に記載された、もしくは http://www.sgs.com で入手が可能なサービスに関する一般的条件に則して発行されます。そちらに明記されている弊社の負うべき債務・補償の範囲及び司法管轄の項目をご注意ください。他に特に明記のない限り、この試験報告書に記載された結果は、試験サンプルのみに属します。この書面全体の複製以外には、弊社からの事前の許可を得ること無く複製することを禁じます。この検査報告書を無断で変更、偽造、改ざんすることは違法であり、違反者に対しては法的手段を講じることになります。

[Graph]

Operating mode: Rx 16ch
Tested port: Mic Cable (Main unit side)

Sweep test

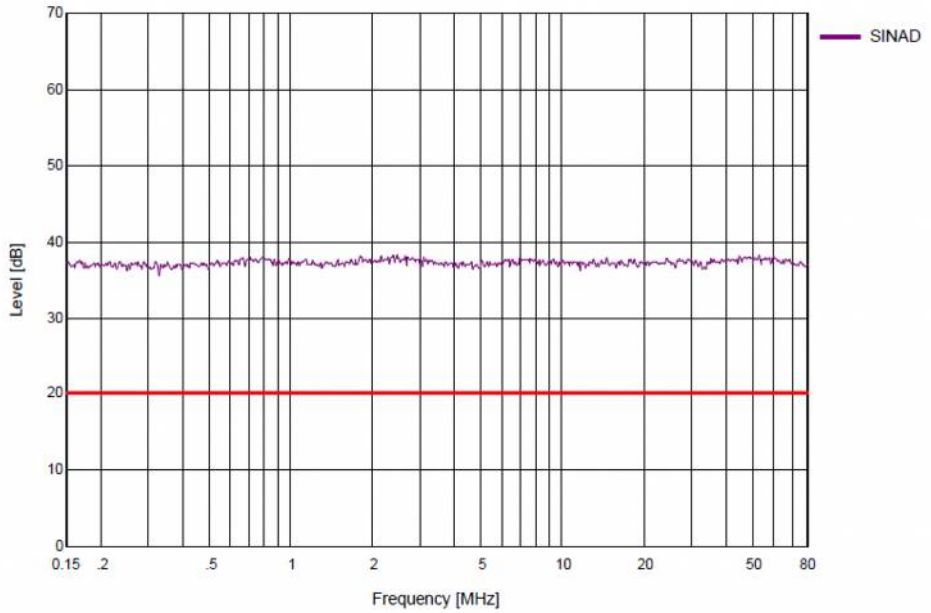

Spot test

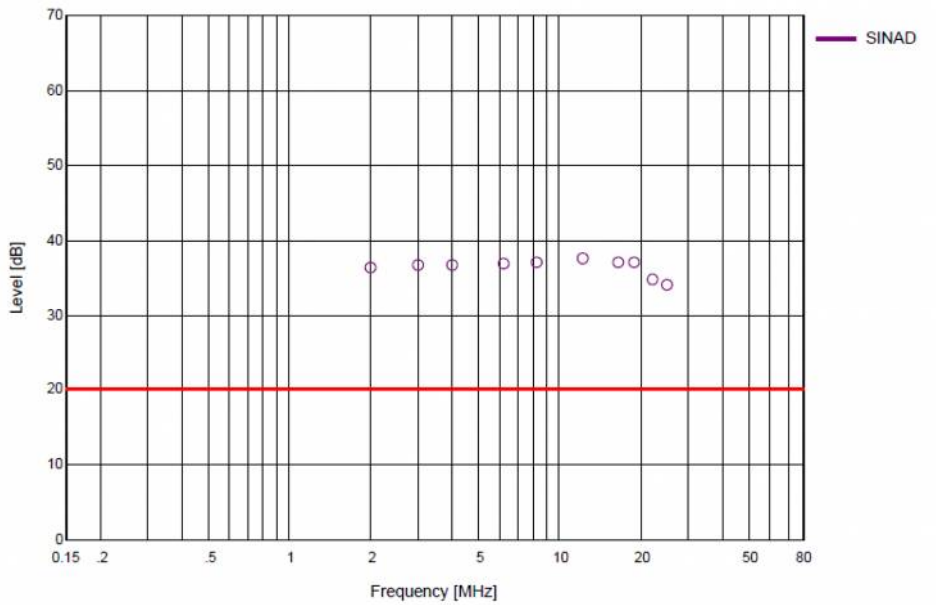

This Test Report is issued by the Company under its General Conditions of Service printed overleaf or available on request and accessible at http://www.sgs.com. Attention is drawn to the limitation of liability, indemnification and jurisdiction issues defined therein. Unless otherwise stated the results shown in this Test Report refer only to the sample(s) tested. This Test Report cannot be reproduced expert, in full, without prior approval of the Company. Any unauthorized alteration, forgery or falsification of the content or appearance of this test report is unlawful and offenders may be prosecuted to the fullest extent of the law.
この試験報告書は裏面に記載された、もしくは http://www.sgs.com で入手が可能なサービスに関する一般的条件に則して発行されます。そちらに明記されている弊社の負うべき債務・補償の範囲及び司法管轄の項目をご注意ください。他に特に明記のない限り、この試験報告書に記載された結果は、試験サンプルのみに属します。この書面全体の複製以外には、弊社からの事前の許可を得ること無く複製することを禁じます。この検査報告書を無断で変更、偽造、改ざんすることは違法であり、違反者に対しては法的手段を講じることになります。

2.2.5 Power supply short term variation

[Test condition]

Variation A:	Voltage (1.2 times), Frequency (1.1 times)
Variation B:	Voltage (0.8 times), Frequency (0.9 times)
Duration:	1.5 s per minute (Voltage), 5.0 s per minute (Frequency)
Test time:	10 min
Performance criterion:	B

[Test equipment]

[Test result] - ***This item was not tested.***

[Test Data]

Variation	Voltage	Frequency	Criteria	Result
A	1.2 times	1.1 times	B	-
B	0.8 times	0.9 times	B	-

[Test Date]

Tested Date:	-	Temperature:	- degC
Humidity:	- %	Atmos. Press:	- hPa

This Test Report is issued by the Company under its General Conditions of Service printed overleaf or available on request and accessible at http://www.sgs.com. Attention is drawn to the limitation of liability, indemnification and jurisdiction issues defined therein. Unless otherwise stated the results shown in this Test Report refer only to the sample(s) tested. This Test Report cannot be reproduced expert, in full, without prior approval of the Company. Any unauthorized alteration, forgery or falsification of the content or appearance of this test report is unlawful and offenders may be prosecuted to the fullest extent of the law.
この試験報告書は裏面に記載された、もしくは http://www.sgs.com で入手が可能なサービスに関する一般的条件に則して発行されます。そちらに明記されている弊社の負うべき債務・補償の範囲及び司法管轄の項目をご注意ください。他に特に明記のない限り、この試験報告書に記載された結果は、試験サンプルのみに属します。この書面全体の複製以外には、弊社からの事前の許可を得ること無く複製することを禁じます。この検査報告書を無断で変更、偽造、改ざんすることは違法であり、違反者に対しては法的手段を講じることになります。

2.2.6 Power supply failure

[Test condition]

Break time: 60 s
Number of Break: 3
Performance criterion: C

[Test equipment]

[Test result] - ***Complied with requirement***

[Test Date]

Tested Date: 06 Nov. 2019 Temperature: 21 degC
Humidity: 46 % Atmos. Press: 1017 hPa

[Test Data]

Tested Line	Operating mode	Criteria	Result
DC power	Rx 16ch	C	Pass
	Rx 70ch	C	Pass
	Tx 16ch	C	Pass

This Test Report is issued by the Company under its General Conditions of Service printed overleaf or available on request and accessible at http://www.sgs.com. Attention is drawn to the limitation of liability, indemnification and jurisdiction issues defined therein. Unless otherwise stated the results shown in this Test Report refer only to the sample(s) tested. This Test Report cannot be reproduced expert, in full, without prior approval of the Company. Any unauthorized alteration, forgery or falsification of the content or appearance of this test report is unlawful and offenders may be prosecuted to the fullest extent of the law.
この試験報告書は裏面に記載された、もしくは http://www.sgs.com で入手が可能なサービスに関する一般的条件に則して発行されます。そちらに明記されている弊社の負うべき債務・補償の範囲及び司法管轄の項目をご注意ください。他に特に明記のない限り、この試験報告書に記載された結果は、試験サンプルのみに属します。この書面全体の複製以外には、弊社からの事前の許可を得ること無く複製することを禁じます。この検査報告書を無断で変更、偽造、改ざんすることは違法であり、違反者に対しては法的手段を講じることになります。

2.2.7 Slow transients (surges)

[Test Condition]

Test levels: ± 0.5 kV (Line to Line; AC port)
± 1.0 kV (Line to GND; AC port)
Number of discharge: 18 (each polarity)
Repetition rate: 6 per minute

[Test equipment]

[Test result] - ***This item was not tested.***

[Test Date]

Tested Date: - Temperature: - degC
Humidity: - % Atmos. Press: - hPa

[Test Data]

Discharge Point	Test level [kV]	Phase	Criteria	Result
L - N (Line to Line)	± 0.5	0/90/180/270 deg	B	-
	± 1.0	0/90/180/270 deg	B	-

This Test Report is issued by the Company under its General Conditions of Service printed overleaf or available on request and accessible at http://www.sgs.com. Attention is drawn to the limitation of liability, indemnification and jurisdiction issues defined therein. Unless otherwise stated the results shown in this Test Report refer only to the sample(s) tested. This Test Report cannot be reproduced expert, in full, without prior approval of the Company. Any unauthorized alteration, forgery or falsification of the content or appearance of this test report is unlawful and offenders may be prosecuted to the fullest extent of the law.
この試験報告書は裏面に記載された、もしくは http://www.sgs.com で入手が可能なサービスに関する一般的条件に則して発行されます。そちらに明記されている弊社の負うべき債務・補償の範囲及び司法管轄の項目をご注意ください。他に特に明記のない限り、この試験報告書に記載された結果は、試験サンプルのみに属します。この書面全体の複製以外には、弊社からの事前の許可を得ること無く複製することを禁じます。この検査報告書を無断で変更、偽造、改ざんすることは違法であり、違反者に対しては法的手段を講じることになります。

4 List of utilized test equipment/ calibration

ID No.	Kind of Equipment	Manufacturer	Model No.	Serial Number	Cal. Date	Cal. until
AC01(EM)	Anechoic Chamber (1st test room)	JSE	203397C	-	2019/4/20	2020/4/30
AC01(EG)	Anechoic Chamber (1st test room)	JSE	203397C	-	2019/3/30	2020/3/31
BA07	Bilogical Antenna	TESEQ	CBL6143A	26670	2018/12/7	2019/12/31
CL11	RF Cable for RE	RFT	-	-	2019/3/19	2020/3/31
CL30	RF Cable 5 m	SUHNER	SUCOFLEX104PE	MY3599	2019/1/23	2020/1/31
CL38	RF Cable 2 m	Junkosha	MWX221	1603S626	2019/1/23	2020/1/31
DH06	DRG Horn Antenna	A.H. Systems	SAS-571	1339	2018/6/19	2020/6/30
LN18	LISN (9kHz)	Kyoritsu	TNW-242F2	12-15-54	2019/3/4	2020/3/31
LP06	Loop Antenna	ETS-Lindgren	6502	00164299	2019/4/13	2020/4/30
PR12	Pre. Amplifier (1-26G)	Agilent Technologies	8449B	3008A02513	2019/1/23	2020/1/31
PR21	Pre. Amplifier	Anritsu	MH648A	6200467119	2018/12/4	2019/12/31
TR06	Test Receiver (F/W : 4.73 SP4)	Rohde & Schwarz	ESU26	100002	2019/10/7	2020/10/31
AC01(IM)	Anechoic Chamber	JSE	203397C	-	2019/10/13	2020/10/31
AC01(IG)	Anechoic Chamber	JSE	203397C	-	2019/9/28	2020/9/30
BC56	Burst Clamp	EM Test	HFK	1112-125	2019/4/11	2020/4/30
CD21	CDN (M2)	FCC	FCC-801-M2-16A	141672	2019/4/11	2020/4/30
CD25	CDN (M1)	FCC	FCC-801-M1-16A	141671	2019/4/11	2020/4/30
CL19	RF Cable for RS	SUCOFLEX	—	—	2019/10/13	2020/10/31
CL65	RF Cable for CS	RFT	—	—	2019/5/27	2020/5/31
EC01	EM Injection Clamp	FCC	TSIC-32	472	2019/4/12	2020/4/30
EM10	EM Probe/Monitor	AR	FL7006	0334662	2019/11/5	2020/11/30
ES04	ESDTester	EMC Partner	ESD3000	374	2019/5/9	2020/5/31
IM04	Surge/Burst/Dip Simulator	EM Test	UCS500N5	P1304111117	2019/4/11	2020/4/30
LA03	Logperiodic Antenna (High Power)	SCHWARZBECK	VULP9118-D	613	2019/10/13	2020/10/31
RP04	RF Power Amplifier	PRANA	AP32DT120	0509-688	2019/5/27	2020/5/31

This Test Report is issued by the Company under its General Conditions of Service printed overleaf or available on request and accessible at http://www.sgs.com. Attention is drawn to the limitation of liability, indemnification and jurisdiction issues defined therein. Unless otherwise stated the results shown in this Test Report refer only to the sample(s) tested. This Test Report cannot be reproduced expert, in full, without prior approval of the Company. Any unauthorized alteration, forgery or falsification of the content or appearance of this test report is unlawful and offenders may be prosecuted to the fullest extent of the law.
この試験報告書は裏面に記載された、もしくは http://www.sgs.com で入手が可能なサービスに関する一般的条件に則して発行されます。そちらに明記されている弊社の負うべき債務・補償の範囲及び司法管轄の項目をご注意ください。他に特に明記のない限り、この試験報告書に記載された結果は、試験サンプルのみに属します。この書面全体の複製以外には、弊社からの事前の許可を得ること無く複製することを禁じます。この検査報告書を無断で変更、偽造、改ざんすることは違法であり、違反者に対しては法的手段を講じることになります。

ID No.	Kind of Equipment	Manufacturer	Model No.	Serial Number	Cal. Date	Cal. until
RP07	RF Power Amplifier 350W	PRANA	AP32LT235	0604-740	2019/6/21	2020/6/30
RP13	RF Power AMP 0.8-4.2GHz 50W	AR	50S1G4A	0326341	2019/10/30	2020/10/31
SL02	Stacked logperiodic Antenna	SCHWARZBECK	STLP9149	507	2019/9/28	2020/9/30
RC05	Radio communication tester	Agilent Technologies	8920B	US35240529	2018/11/20	2019/11/30
SG05	Signal Generator	Rohde & Schwarz	SMR20	100905	2019/9/3	2020/9/30
SG13	Signal Generator	Agilent Technologies	N5181A	MY47420721	2019/9/3	2020/9/30

The measuring equipment, which was utilized in performing the tests documented herein, has been calibrated in accordance with the manufacturer's recommendations for utilizing calibration equipment, which is traceable to recognized national standards.

This Test Report is issued by the Company under its General Conditions of Service printed overleaf or available on request and accessible at http://www.sgs.com. Attention is drawn to the limitation of liability, indemnification and jurisdiction issues defined therein. Unless otherwise stated the results shown in this Test Report refer only to the sample(s) tested. This Test Report cannot be reproduced expert, in full, without prior approval of the Company. Any unauthorized alteration, forgery or falsification of the content or appearance of this test report is unlawful and offenders may be prosecuted to the fullest extent of the law.
この試験報告書は裏面に記載された、もしくは http://www.sgs.com で入手が可能なサービスに関する一般的条件に則して発行されます。そちらに明記されている弊社の負うべき債務・補償の範囲及び司法管轄の項目をご注意ください。他に特に明記のない限り、この試験報告書に記載された結果は、試験サンプルのみに属します。この書面全体の複製以外には、弊社からの事前の許可を得ること無く複製することを禁じます。この検査報告書を無断で変更、偽造、改ざんすることは違法であり、違反者に対しては法的手段を講じることになります。

SGS Japan Inc. 3-5-23, Kitayamata, Tsuzuki-ku, Yokohama 224-0021, Japan
t +81(0) 45 550 3520 f +81(0) 45 592 7506 URL: www.jp.sgs.com

Member of the SGS Group (Société Générale de Surveillance)