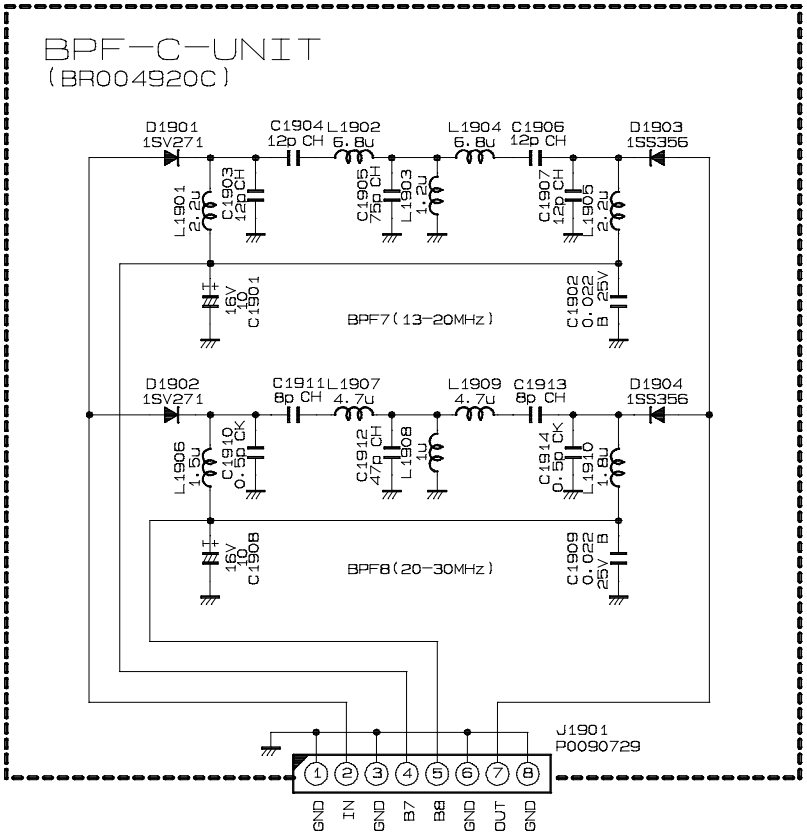

CIRCUIT DIAGRAM	MODEL VX-1200
DES. B-AC002H000/BPF-C-UNIT	
REF. BP006510D.cir/001.sht	EDITION 0000
DATE 30 JUN., 1999	UPDATE 06.Jan., 2000
YAESU MUSEN CO., LTD	

yaesu1 2000.01.13 13:38