FCC TEST REPORT

according to

FCC Rules and Regulations

Part 15 Subpart C

Applicant	Belkin Corporation
Address	501 West Walnut Street, Compton CA 90220, USA
Equipment	Wireless G Router
Model No.	F5D7230-4
FCC ID	K7SF5D7230A
Trade Name	Belkin

Laboratory Accreditation

1332

ILAC MRA

- The test result refers exclusively to the test presented test model / sample.,
- Without written approval of ***E**xclusive **C**ertification **C**orp.* the test report shall not be reproduced except in full.
- The EUT is also considered as a kind of computer peripheral, because the connection to computer is necessary for typical use. It has been verified to comply with the requirements of FCC Part 15, Subpart B, Class B (DoC). The test report has been issued separately.

Contents

1. Report of Measurements and Examinations 4
   1.1. List of Measurements and Examinations 4
   1.2. Antenna Requirements 5
   1.3. Test of Conducted Emission 6
   1.4. Test of Radiated Emission 8
   1.5. 6dB Bandwidth 9
   1.6. Maximum Peak Output Power 9
   1.7. Band Edges Measurement 10
   1.8. Power Spectral Density 10
   1.9. Restricted Bands of Operation 11
   1.10. Labeling Requirement 11
   1.11. RF Exposure 12
2. Test Configuration of Equipment under Test 14
   2.1. Test Mode and Test Software 14
   2.2. Description of Test System 14
   2.3. Connection Diagram of Test System 15
   2.4. Feature of Equipment under Test 15
   2.5. RF Module Specifications 16
   2.6. History of this test report 16
3. General Information of Test 17
4. Test Result and Data 18
   4.1. Antenna Requirement 18
   4.2. Test Result of Conducted Emission 19
   4.3. Test Result of Radiated emission 32
   4.4. 6dB Bandwidth Measurement Data 40
   4.5. Peak Output Power Measurement Data 44
   4.6. Band Edges Measurement Data 48
   4.7. Restrict band emission Measurement Data 53
   4.8. Power Spectral Density Measurement Data 54
5. List of Measuring Equipment Used 58
Appendix A. Photographs of EUT ..... A1 ~ A6

CERTIFICATE OF COMPLIANCE

according to

FCC Rules and Regulations

Part 15 Subpart C

Applicant	Belkin Corporation
Address	501 West Walnut Street, Compton CA 90220, USA
Equipment	Wireless G Router
Model No.	F5D7230-4
FCC ID	K7SF5D7230A

I **HEREBY** CERTIFY THAT :

The measurements shown in this test report were made in accordance with the procedures given in **ANSI C63.4** The equipment was ***passed*** the test performed according to **FCC Rules and Regulations Part 15 Subpart C (2003).** The test was carried out on Feb. 21, 2005 at ***E**xclusive **C**ertification **C**orp.*

Signature

Anson Chou Mar. 1, 2005

Anson Chou / Manager

1. Report of Measurements and Examinations

1.1. List of Measurements and Examinations

FCC Rule	. Description of Test	Result
15.203	. Antenna Requirement	Pass
15.207	. Conducted Emission	Pass
15.209	. Radiated Emission	Pass
15.247(a)(2)	. 6dB Bandwidth	Pass
15.247(b)	. Maximum Peak Output Power	Pass
15.247(c)	. 100kHz Bandwidth of Frequency Band Edges	Pass
15.247(d)	. Power Spectral Density	Pass
1.1307 1.1310 2.1091 2.1093	. RF Exposure Compliance	Pass

Test by: Jerry Feb.18.2005

1.2. Antenna Requirements

1.2.1. Standard Applicable

For intentional device, according to FCC 47 CFR Section 15.203, an intentional radiator shall be designed to ensure that no antenna other than that furnished by the responsible party shall be used with the device.

And according to FCC 47 CFR Section 15.247 (b), if transmitting antennas of directional gain greater than 6dBi are used, the power shall be reduced by the amount in dB that the directional gain of the antenna exceeds 6dBi.

1.3. Test of Conducted Emission

Conducted Emissions were measured from 150 kHz to 30 MHz with a bandwidth of 9 KHz on the 115 VAC power and return leads of the EUT according to the methods defined in ANSI C63.4-2003 Section 3.1. The EUT was placed on a nonmetallic stand in a shielded room 0.8 meters above the ground plane as shown in section 2.2. The interface cables and equipment positioning were varied within limits of reasonable applications to determine the position produced maximum conducted emissions.

1.3.1. Test Procedures

a. The EUT was placed 0.4 meter from the conducting wall of the shielding room was kept at least 80 centimeters from any other grounded conducting surface.
b. Connect EUT to the power mains through a line impedance stabilization network (LISN).
c. All the support units are connecting to the other LISN.
d. The LISN provides 50 ohm coupling impedance for the measuring instrument.
e. The FCC states that a 50 ohm, 50 microhenry LISN should be used.
f. Both sides of AC line were checked for maximum conducted interference.
g. The frequency range from 150 kHz to 30 MHz was searched.
h. Set the test-receiver system to Peak Detect Function and Specified Bandwidth with Maximum Hold Mode.

1.3.2. Typical Test Setup Layout of Conducted Emission

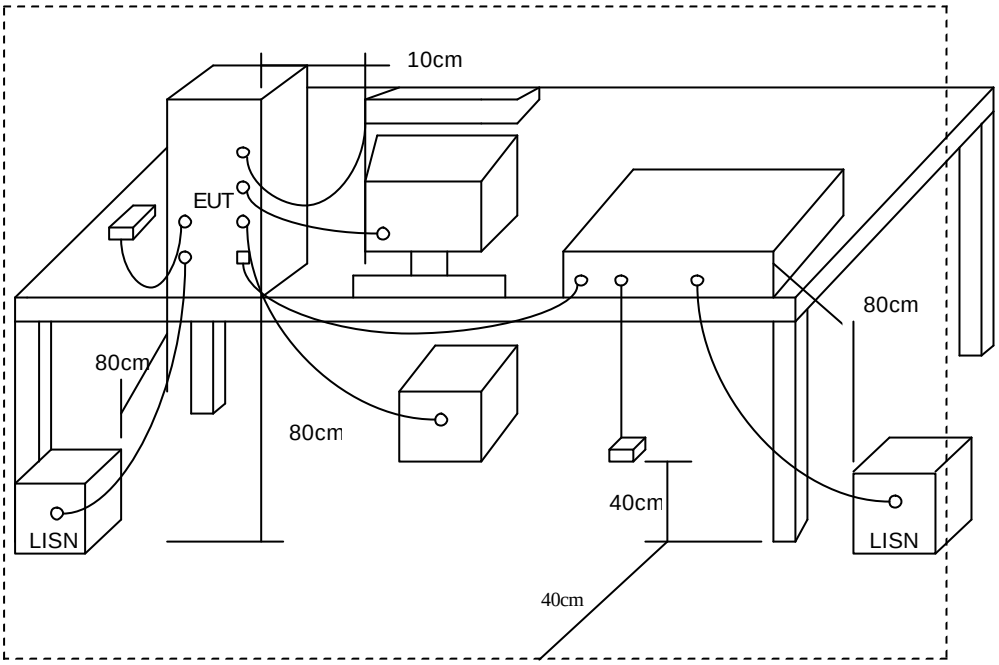

1.3.3. Conducted Emission Requirement

Except for A digital devices, for equpment that is designed to be connected to the public utility (AC) power line on any frequency voltage that is conducted back onto the AC power line on ant frequency or frequencies within the band 150KHz to 30MHz shall not exceed the limits in the following table, as measured using a 50µH/50 ohms line impeddance stabilization network (LISN). Compliance with the provisions of this paragraph shall be based on the measurement of the Radio frequency voltage between each power line and ground at the power terminal. The lower limit applies at the band edges.

Frequency (MHz)	**Quasi Peak (dB µ V)**	**Average (dB µ V)**
0.15 – 0.5	66-56*	56-46*
0.5 – 5.0	56	46
5.0 – 30.0	60	50

1.4. Test of Radiated Emission

Radiated emissions from 30 MHz to 25 GHz were measured according to the methods defines in ANSI C63.4-2003. The EUT was placed, 0.8 meter above the ground plane, as shown in section 5.6.3. The interface cables and equipment positions were varied within limits of reasonable applications to determine the positions producing maximum radiated emissions

1.4.1. Test Procedures

1. The EUT was placed on a rotatable table top 0.8 meter above ground.
2. The EUT was set 3 meters from the interference receiving antenna which was mounted on the top of a variable height antenna tower.
3. The table was rotated 360 degrees to determine the position of the highest radiation.
4. The antenna is a broadband antenna and its height is varied between one meter and four meters above ground to find the maximum value of the field strength both horizontal polarization and vertical polarization of the antenna are set to make the measurement.
5. For each suspected emission the EUT was arranged to its worst case and then tune the antenna tower (from 1 M to 4 M) and turn table (from 0 degree to 360 degrees) to find the maximum reading.
6. Set the test-receiver system to Peak or CISPR quasi-peak Detect Function and specified bandwidth with Maximum Hold Mode.
7. If the emission level of the EUT in peak mode was 3 dB lower than the limit specified, then testing will be stopped and peak values of EUT will be reported, otherwise, the emissions which do not have 3 dB margin will be repeated one by one using the quasi-peak method and reported.
8. For testing above 1GHz, the emission level of the EUT in peak mode was 20dB lower than average limit (that means the emission level in peak mode also complies with the limit in average mode), then testing will be stopped and peak values of EUT will be reported, otherwise, the emissions will be measured in average mode again and reported.

1.4.2. Typical Test Setup Layout of Radiated Emission

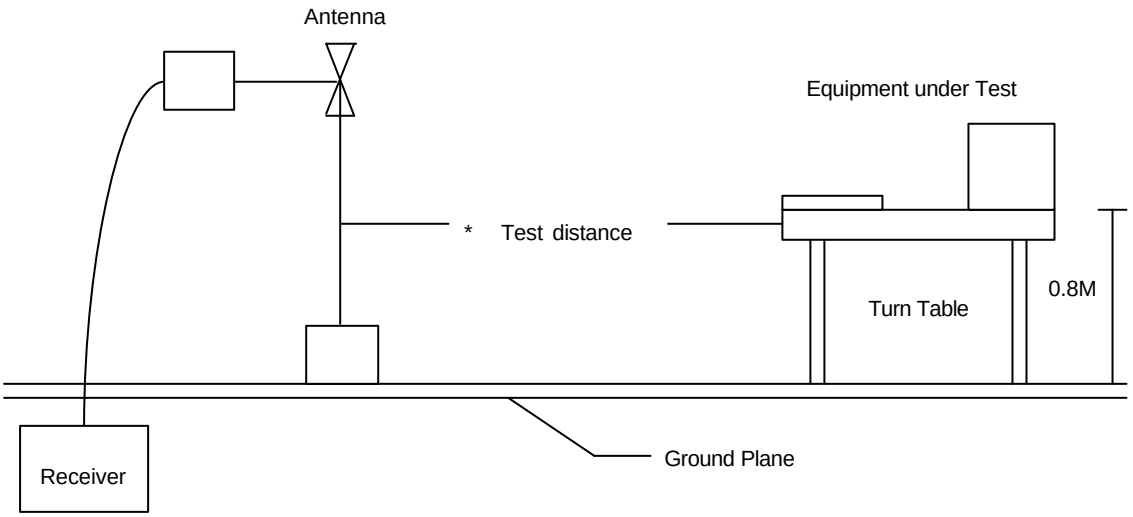

1.5. 6dB Bandwidth

1.5.1. Test Procedure：

1. The transmitter output was connected to the spectrum analyzer.
2. Set RBW of spectrum analyzer to 100 KHz and VBW to 100 KHz.
3. The 6 dB bandwidth is defined as the total spectrum the power of which is higher than peak power minus 6 dB.

1.5.2. Test Setup Layout：

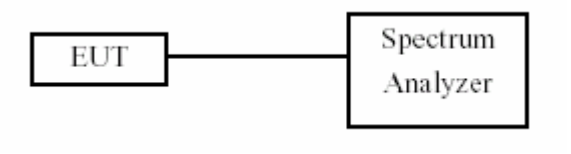

1.6. Maximum Peak Output Power

1.6.1. Test Procedure：

The antenna port（RF output）of the EUT was connected to the input（RF input）of a spectrum analyzer. Power was read directly from the spectrum analyzer and cable loss connection was added to the reading to obtain power at the EUT antenna terminal. The EUT Output Power was set to maximum to produce the worse case test result.

1.6.2. Test Setup Layout：

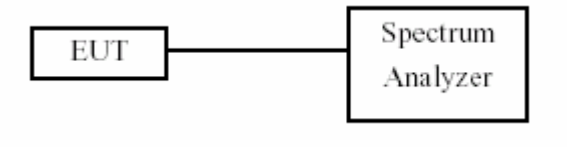

1.7. Band Edges Measurement

1.7.1. Test Procedure：

1. The transmitter output was connected to the spectrum analyzer via a low lose cable.
2. Set both RBW and VBW of spectrum analyzer to 100 KHz with convenient frequency span including 100 MHz bandwidth from band edge.
3. The band edges was measured and recorded.

1.8. Power Spectral Density

1.8.1. Test Procedure：

1. The transmitter output was connected to spectrum analyzer.
2. The spectrum analyzer' s resolution bandwidth were set at 3KHz RBW and 30KHz VBW as that of the fundamental frequency. Set the sweep time=span/3KHz.
3. The power spectral density was measured and recorded.
4. The Sweep time is allowed to be longer than span/3KHz for a full response of the mixer in the spectrum analyzer.

1.8.2. Test Setup Layout：

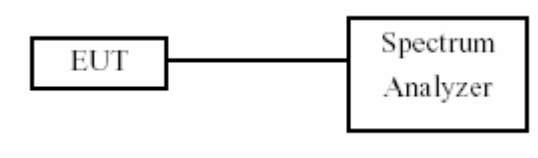

1.9. Restricted Bands of Operation

Only spurious emissions are permitted in any of the frequency bands listed below:

MHz	MHz	MHz	GHz
0.09000 – 0.11000	16.42000 – 16.42300	399.9 – 410.0	4.500 – 5.250
0.49500 – 0.505**	16.69475 – 16.69525	608.0 – 614.0	5.350 – 5.460
2.17350 – 2.19050	16.80425 – 16.80475	960.0 – 1240.0	7.250 – 7.750
4.12500 – 4.12800	25.50000 – 25.67000	1300.0 – 1427.0	8.025 – 8.500
4.17725 – 4.17775	37.50000 – 38.25000	1435.0 – 1626.5	9.000 – 9.200
4.20725 – 4.20775	73.00000 – 74.60000	1645.5 – 1646.5	9.300 – 9.500
6.21500 – 6.21800	74.80000 – 75.20000	1660.0 – 1710.0	10.600 – 12.700
6.26775 – 6.26825	108.00000 – 121.94000	1718.8 – 1722.2	13.250 – 13.400
6.31175 – 6.31225	123.00000 – 138.00000	2200.0 – 2300.0	14.470 – 14.500
8.29100 – 8.29400	149.90000 – 150.05000	2310.0 – 2390.0	15.350 – 16.200
8.36200 – 8.36600	156.52475 – 156.52525	2483.5 – 2500.0	17.700 – 21.400
8.37625 – 8.38675	156.70000 – 156.90000	2655.0 – 2900.0	22.010 – 23.120
8.41425 – 8.41475	162.01250 – 167.17000	3260.0 – 3267.0	23.600 – 24.000
12.29000 – 12.29300	167.72000 – 173.20000	3332.0 – 3339.0	31.200 – 31.800
12.51975 – 12.52025	240.00000 – 285.00000	3345.8 – 3358.0	36.430 – 36.500
12.57675 – 12.57725	322.00000 – 335.40000	3600.0 – 4400.0	Above 38.6
13.36000 – 13.41000			

**: Until February 1, 1999, this restricted band shall be 0.490-0.510 MHz

1.10. Labeling Requirement

The device shall bear the following statement in a conspicuous location on the device:

This device complies with part 15 of the FCC Rules. Operation is subject to the following two conditions: (1) This device may not cause harmful interference, and (2) this device must accept any interference received, including interference that may cause undesired operation.

1.11. RF Exposure

FCC Rules and Regulations Part 1.1307, 1.1310, 2.1091, 2.1093:

RF Exposure Compliance

1.11.1. Limit For Maximum Permissible Exposure (MPE)

(A) Limits for Occupational / Controlled Exposure

Frequency Range (MHz)	Electric Field Strength (E) (V/m)	Magnetic Field Strength (H) (A/m)	Power Density (S) (mW/ cm²)	Averaging Time |E|², |H|² or S (minutes)
0.3-3.0	614	1.63	(100)*	6
3.0-30	1842/f	4.89/f	(900/f)*	6
30-300	61.4	0.163	1.0	6
300-1500			F/300	6
1500-100,000			5	6

(B) Limits for General Population / Uncontrolled Exposure

Frequency Range (MHz)	Electric Field Strength (E) (V/m)	Magnetic Field Strength (H) (A/m)	Power Density (S) (mW/cm²)	Averaging Time |E|², |H|² or S (minutes)
0.3-1.34	614	1.63	(100)*	30
1.34-30	824/f	2.19/f	(180/f)*	30
30-300	27.5	0.073	0.2	30
300-1500			F/1500	30
1500-100,000			1.0	30

F=frequency in MHz *Plane-wave equivalent power density

1.11.2. MPE Calculations

$$E\ (V/m) = \frac{\sqrt{30 \times P \times G}}{d} \qquad \text{Power Density: } Pd\ (mW/cm^2) = \frac{E^2}{3770}$$

E＝Electric field (V/m)

P＝Peak output power (W)

G＝Antenna numeric gain (numeric)

d＝Separation distance (m)

Because the EUT is belong to General Population/ Uncontrolled Exposure. So the Limit of Power Density is 10 W/m². We can change the formula to:

$$d = \sqrt{\frac{30 \times P \times G}{3770}}$$

1.11.3. FCC Radiation Exposure Statement

This equipment complies with FCC radiation exposure limits set forth for an uncontrolled environment. In order to avoid the possibility of exceeding the FCC radio frequency exposure limits, human proximity to the antenna shall not be less than 20cm (8 inches) during normal operation. Proposed RF exposure safety information to include in User' s Manual.

2. Test Configuration of Equipment under Test

2.1. Test Mode and Test Software

The following test mode and test software was performed for conduction and radiation test:

- 802.11b (CH LO: 2412MHz)
- 802.11b (CH MID: 2437MHz)
- 802.11b (CH HI: 2462MHz)
- 802.11g (CH LO: 2412MHz)
- 802.11g (CH MID: 2437MHz)
- 802.11g (CH HI: 2462MHz)
- An executive programs, “Dutapidll.exe” Application under WIN XP.

2.2. Description of Test System

Device	Manufacturer	Model No.	Description
PC	IBM	IGV	Power Cable, Unshielding 1.8 m
Monitor	SlimAGE	510A	Power Cable, Adapter Unshielding 1.8 m Data Cable, VGA shielding 1.35 m
Keyboard	IBM	KB-0225	Data Cable, PS2 shielding 1.85 m
Mouse	IBM	MO28VO	Data Cable, USB shielding 1.85 m
Modem	ACEXX	DM-1414	Power Cable, Adapter Unshielding 1.8 m Data Cable, RS232 Unshielding 1.35 m
Printer	HP	Desk Jet400	Power Cable, Adapter Unshielding 1.8 m Data Cable, PRINT Shielding 1.6 m
Notebook (Remote Site)	IBM	R40(2723-BV1)	Power Cable, Adapter Unshielding 1.8 m

Use Cable:

Cable	Description
RJ-45	Unshielding, 10m
RJ-45	Unshielding, 1.5m
RJ-45*3	Unshielding, 0.5m

2.3. Connection Diagram of Test System

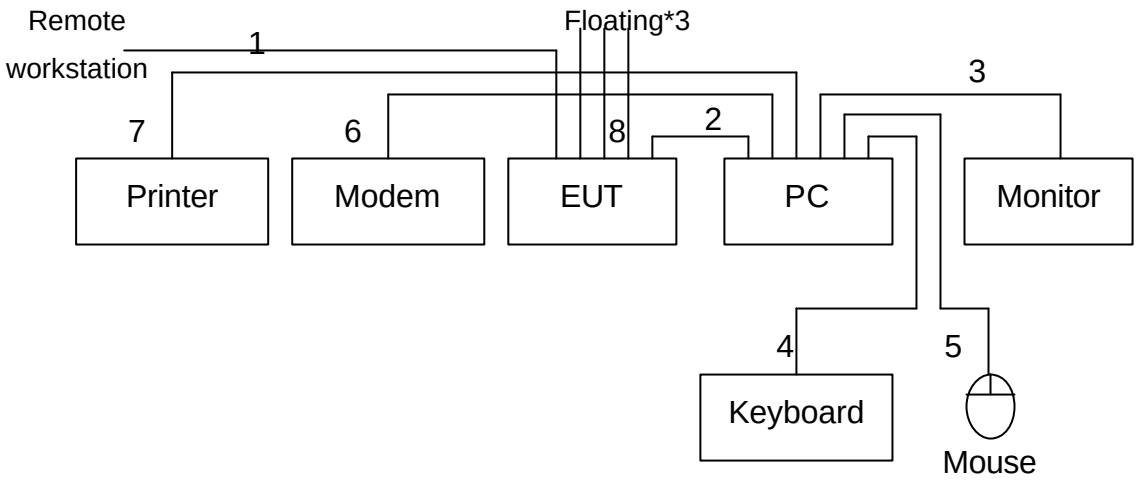

1. The RJ45 cable is connected form remote workstation to the EUT.
2. The RJ45 cable is connected form PC to the EUT.
3. The I/O cable is connected from PC to the Monitor.
4. The I/O cable is connected from PC to the Keyboard.
5. The I/O cable is connected from PC to the Mouse.
6. The I/O cable is connected from PC to the MODEM
7. The I/O cable is connected from PC to the Printer.
8. These RJ45 cables are floating.

2.4. Feature of Equipment under Test

Integrated 802.11g Wireless Access Point

802.11g is an exciting new wireless technology that achieves data rates up to 54Mbps, nearly five times faster than 802.11b.

Works with Both PCs and Mac®Computers

The Router supports a variety of networking environments including Mac®OS 8.x, 9.x, X v10.x, AppleTalk®, Linux®, Windows®95, 98, Me, NT®, 2000, and XP, and others. All that is needed is an Internet browser and a network adapter that supports TCP/IP (the standard language of the Internet).

Integrated 10/100 4-Port Switch

The Router has a built-in, 4-port network switch to allow your wired computers to share printers, data and MP3 files, digital photos, and much more. The switch features automatic detection so it will adjust to the speed of connected devices. The switch will transfer data between computers and the Internet simultaneously without interrupting or consuming resources.

2.5. RF Module Specifications

A) General			
Item	Specification	Item	Specification
Frequency Range	Tx: 2.4 GHz ISM Band (2,400 - 2,497MHz) Rx: 2.4 GHz ISM Band (2,400 - 2,497MHz)	Type of Modulation	DSSS and OFDM
Channel Spacing	5MHz	Channel Capacity	54Mbps
B) Receiver			
RF Sensitivity	-72dBm at 54Mbps -80dBm at 11Mbps	Rx Band:	2.412GHz~2.483.5GHz
C)Transmitter			
RF Output Power	dBm:+12~+14dBm at 54Mbps and +16~+18dBm at 11Mbps	Spurious Emission	FCC 15.247
Frequency Stability	ppm:40MHz+/-20ppm	Tx Band:	2.412GHz~2.483.5GHz
Frequency Deviation Limiting	(2.412GHz~2.4835GHz)+/-20ppm		

2.6. History of this test report

ORIGINAL.

3. General Information of Test

Test Site:	Exclusive Certification Corp. 4F-2, No. 28, Lane 78, Xing-Ai Rd. Nei-hu, Taipei City 114 Taiwan R.O.C.
Test Site Location (OATS1-SD):	No.68-1, Shihbachongsi, shihding Township, Taipei County 223, Taiwan, R.O.C.
Test Voltage:	AC 110V/ 60Hz
Test in Compliance with:	ANSI C63.4-2003 FCC Part 15 Subpart C
Frequency Range Investigated:	Conducted: from 150kHz to 30 MHz Radiation: from 30 MHz to 24620MHz
Test Distance:	The test distance of radiated emission from antenna to EUT is 3 M.

4. Test Result and Data

4.1. Antenna Requirement

4.1.1. Antenna Construction and Directional Gain

Antenna type: Integral dipole antenna.

Antenna Gain: 2 dBi.

4.2. Test Result of Conducted Emission

EUT : F5D7230-4
Power : AC 110V
Test Mode : 802.11b CH LO
Memo :

Pol/Phase : NEUTRAL
Temperature : 25 ℃
Humidity : 60 %

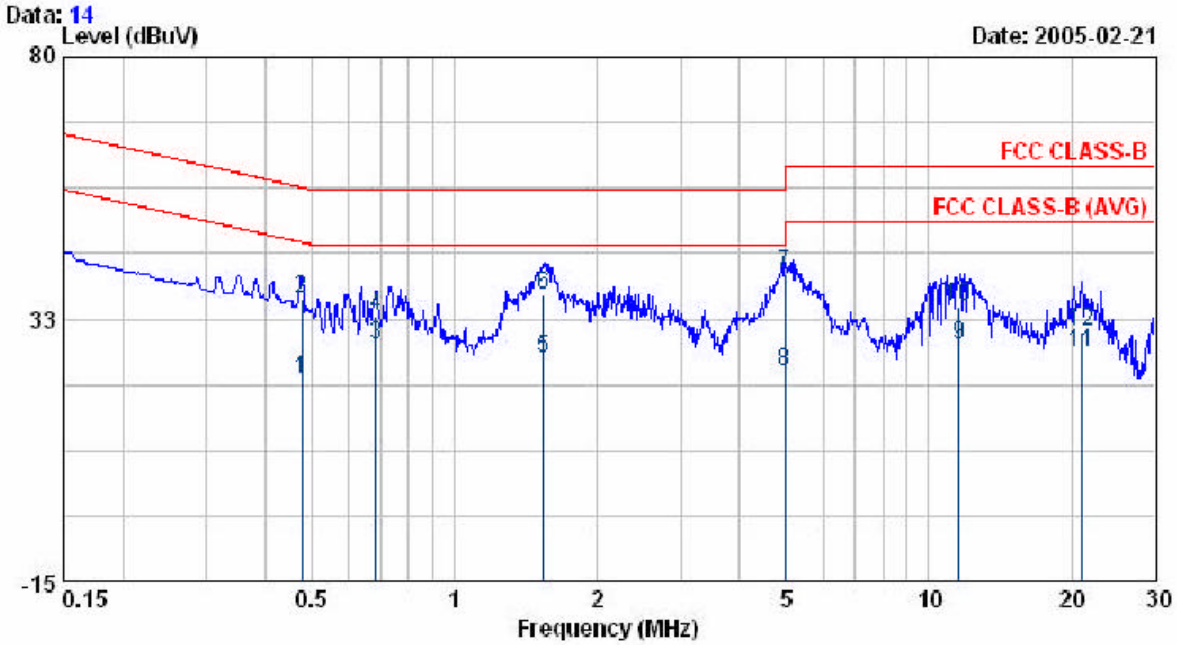

Freq	Read Level	Factor	Level	Limit	Over Limit	Remark
MHz	dBuV	dB	dBuV	dBuV	dBuV	
0.476	20.92	0.48	21.40	46.41	-25.01	AVERAGE
0.476	35.80	0.48	36.28	56.41	-20.13	QP
0.685	27.39	0.44	27.83	46.00	-18.17	AVERAGE
0.685	32.43	0.44	32.87	56.00	-23.13	QP
1.538	24.80	0.46	25.26	46.00	-20.74	AVERAGE
1.538	36.43	0.46	36.89	56.00	-19.11	QP
4.979	40.20	0.50	40.70	56.00	-15.30	QP
4.979	22.33	0.50	22.83	46.00	-23.17	AVERAGE
11.615	27.04	0.61	27.65	50.00	-22.35	AVERAGE
11.615	34.24	0.61	34.85	60.00	-25.15	QP
20.991	25.83	0.72	26.55	50.00	-23.45	AVERAGE
20.991	29.60	0.72	30.32	60.00	-29.68	QP

Remarks: 1. Level = Read Level + Factor
2. Factor = LISN(ISN) Factor + Cable Loss

EUT : F5D7230-4
Power : AC 110V
Test Mode : 802.11b CH LO
Memo :

Pol/Phase : LINE
Temperature : 25 ℃
Humidity : 60 %

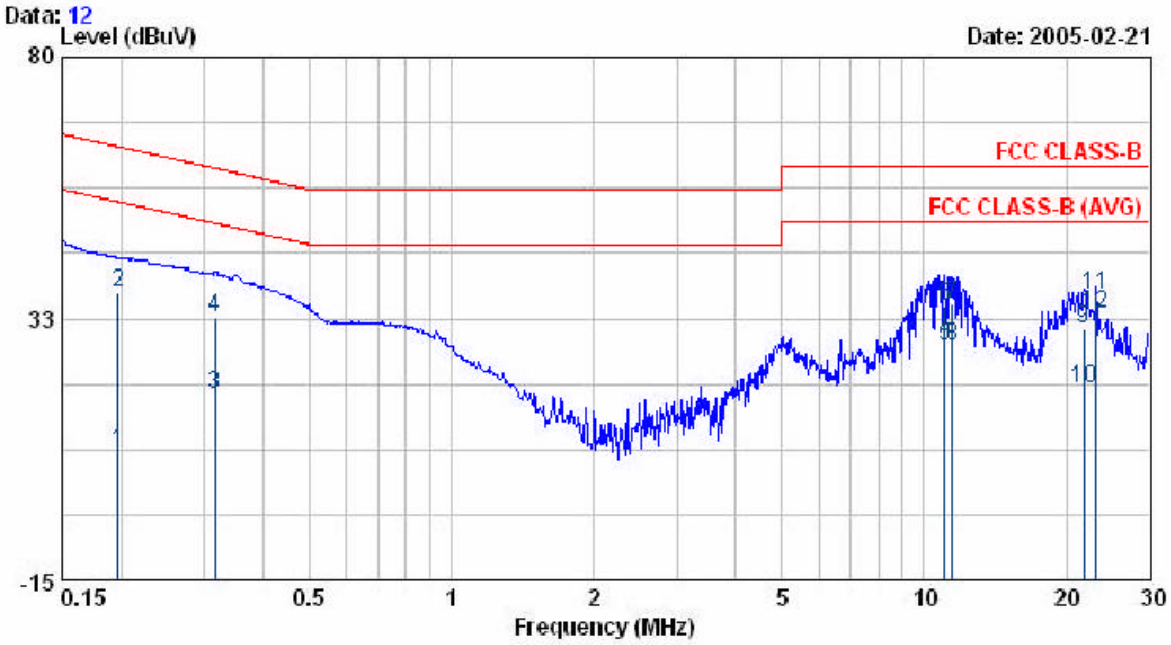

Freq	Read Level	Factor	Level	Limit	Over Limit	Remark
MHz	dBuV	dB	dBuV	dBuV	dBuV	
0.198	8.14	0.20	8.34	53.71	-45.37	AVERAGE
0.198	36.98	0.20	37.18	63.71	-26.53	QP
0.317	18.51	0.40	18.91	49.80	-30.89	AVERAGE
0.317	32.40	0.40	32.80	59.80	-27.00	QP
11.069	26.81	0.50	27.31	50.00	-22.69	AVERAGE
11.069	34.32	0.50	34.82	60.00	-25.18	QP
11.498	34.69	0.54	35.23	60.00	-24.77	QP
11.498	27.05	0.54	27.59	50.00	-22.41	AVERAGE
21.788	29.69	0.85	30.54	60.00	-29.46	QP
21.788	18.80	0.85	19.65	50.00	-30.35	AVERAGE
23.128	35.74	0.96	36.70	60.00	-23.30	QP
23.128	32.47	0.96	33.43	50.00	-16.57	AVERAGE

Remarks: 1. Level = Read Level + Factor
2. Factor = LISN(ISN) Factor + Cable Loss

EUT : F5D7230-4
Power : AC 110V
Test Mode : 802.11b CH MID
Memo :

Pol/Phase : NEUTRAL
Temperature : 25 ℃
Humidity : 60 %

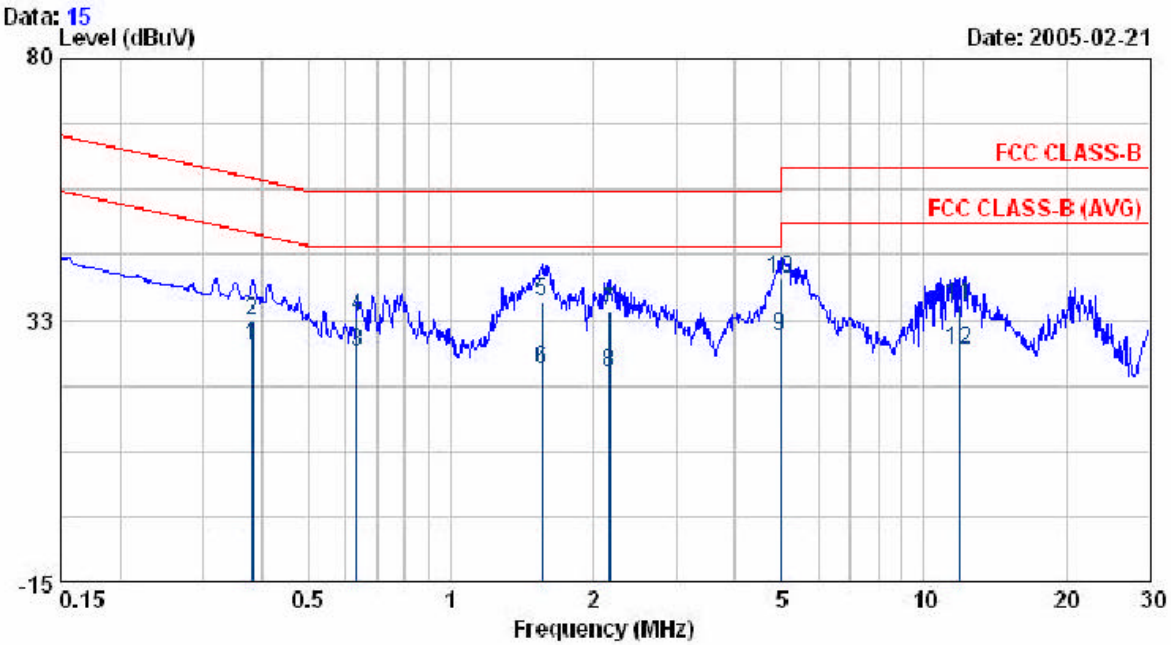

Freq	Read Level	Factor	Level	Limit	Over Limit	Remark
MHz	dBuV	dB	dBuV	dBuV	dBuV	
0.381	27.19	0.48	27.67	48.27	-20.60	AVERAGE
0.381	31.99	0.48	32.47	58.27	-25.80	QP
0.633	26.34	0.45	26.79	46.00	-19.21	AVERAGE
0.633	32.47	0.45	32.92	56.00	-23.08	QP
1.564	35.39	0.46	35.85	56.00	-20.15	QP
1.564	23.26	0.46	23.72	46.00	-22.28	AVERAGE
2.164	33.48	0.50	33.98	56.00	-22.02	QP
2.164	22.28	0.50	22.78	46.00	-23.22	AVERAGE
4.978	28.93	0.50	29.43	46.00	-16.57	AVERAGE
4.978	39.50	0.50	40.00	56.00	-16.00	QP
11.846	34.42	0.63	35.05	60.00	-24.95	QP
11.846	26.56	0.63	27.19	50.00	-22.81	AVERAGE

Remarks: 1. Level = Read Level + Factor
2. Factor = LISN(ISN) Factor + Cable Loss

EUT	: F5D7230-4		
Power	: AC 110V	Pol/Phase	: LINE
Test Mode	: 802.11b CH MID	Temperature	: 25 °C
Memo	:	Humidity	: 60 %

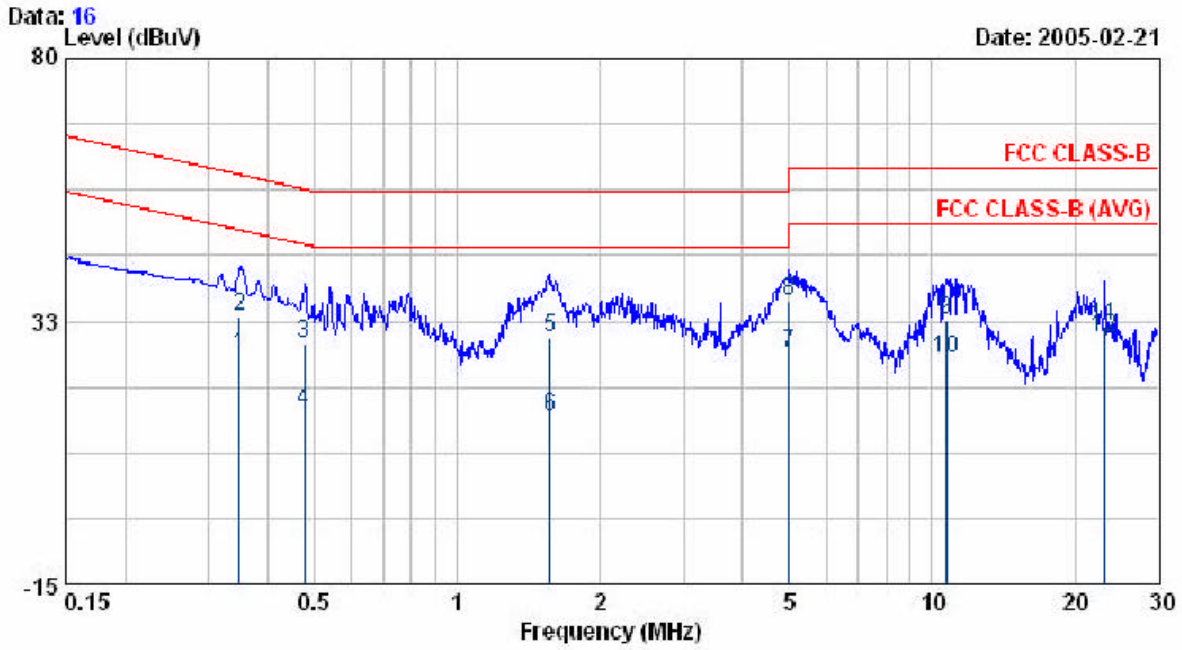

Freq	Read Level	Factor	Level	Limit	Over Limit	Remark
MHz	dBuV	dB	dBuV	dBuV	dBuV	
0.348	25.80	0.44	26.24	49.01	-22.77	AVERAGE
0.348	32.87	0.44	33.31	59.01	-25.70	QP
0.477	28.19	0.48	28.67	56.40	-27.73	QP
0.477	15.73	0.48	16.21	46.40	-30.19	AVERAGE
1.573	29.10	0.47	29.57	56.00	-26.43	QP
1.573	14.76	0.47	15.23	46.00	-30.77	AVERAGE
5.002	26.11	0.48	26.59	50.00	-23.41	AVERAGE
5.002	35.66	0.48	36.14	60.00	-23.86	QP
10.721	32.29	0.47	32.76	60.00	-27.24	QP
10.721	25.15	0.47	25.62	50.00	-24.38	AVERAGE
23.129	30.83	0.96	31.79	60.00	-28.21	QP
23.129	28.49	0.96	29.45	50.00	-20.55	AVERAGE

Remarks: 1. Level = Read Level + Factor
2. Factor = LISN(ISN) Factor + Cable Loss

EUT : F5D7230-4
Power : AC 110V
Test Mode : 802.11b CH HI
Memo :

Pol/Phase : NEUTRAL
Temperature : 25 °C
Humidity : 60 %

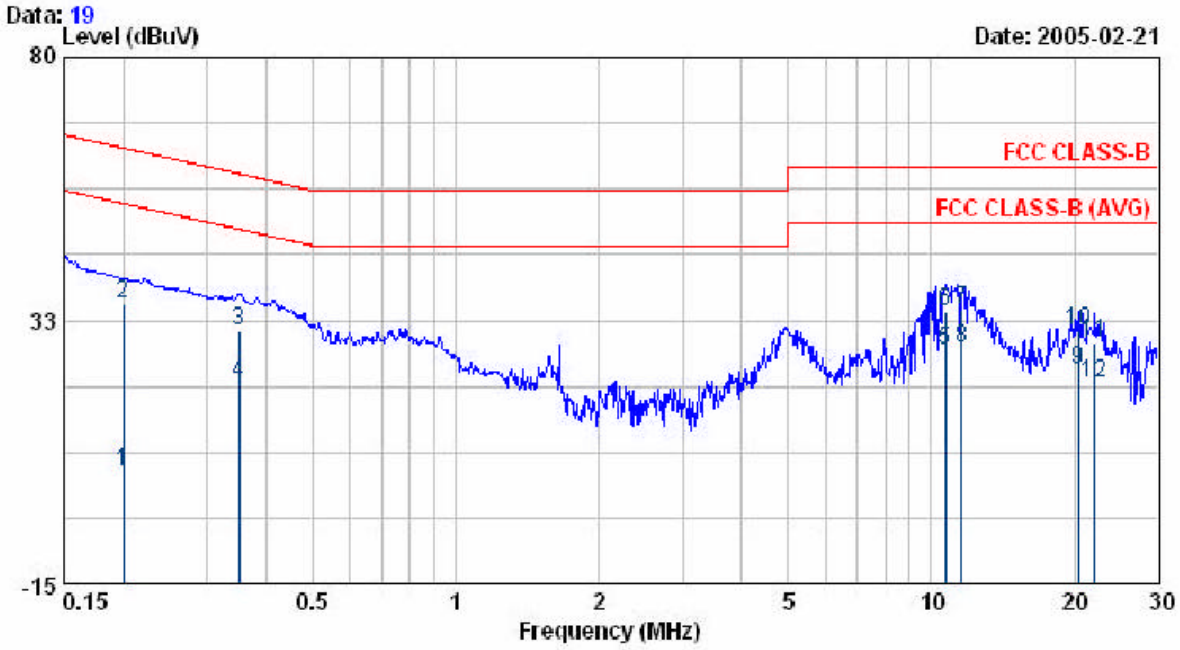

Freq	Read Level	Factor	Level	Limit	Over Limit	Remark
MHz	dBuV	dB	dBuV	dBuV	dBuV	
0.200	5.13	0.20	5.33	53.62	-48.29	AVERAGE
0.200	35.15	0.20	35.35	63.62	-28.27	QP
0.350	30.09	0.44	30.53	58.96	-28.43	QP
0.350	20.70	0.44	21.14	48.96	-27.82	AVERAGE
10.730	26.59	0.55	27.14	50.00	-22.86	AVERAGE
10.730	33.56	0.55	34.11	60.00	-25.89	QP
11.591	33.88	0.61	34.49	60.00	-25.51	QP
11.591	26.80	0.61	27.41	50.00	-22.59	AVERAGE
20.379	22.94	0.71	23.65	50.00	-26.35	AVERAGE
20.379	29.92	0.71	30.63	60.00	-29.37	QP
22.031	27.73	0.74	28.47	60.00	-31.53	QP
22.031	20.59	0.74	21.33	50.00	-28.67	AVERAGE

Remarks: 1. Level = Read Level + Factor
2. Factor = LISN(ISN) Factor + Cable Loss

EUT : F5D7230-4
Power : AC 110V
Test Mode : 802.11b CH HI
Memo :

Pol/Phase : LINE
Temperature : 25 ℃
Humidity : 60 %

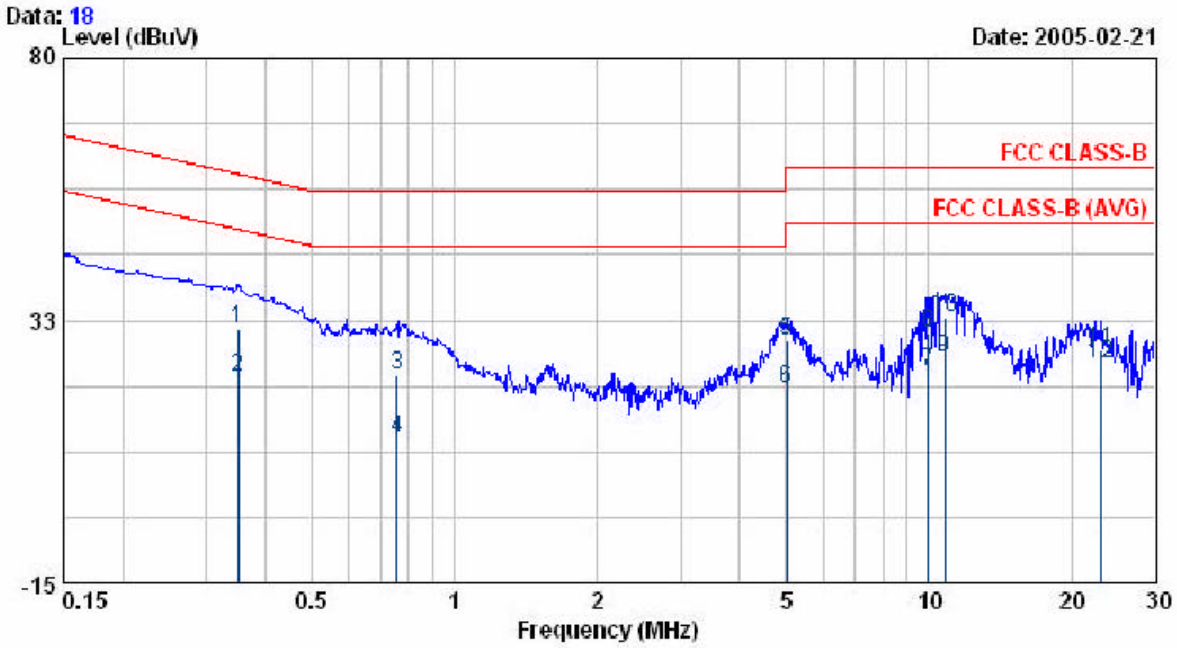

Freq	Read Level	Factor	Level	Limit	Over Limit	Remark
MHz	dBuV	dB	dBuV	dBuV	dBuV	
0.350	30.62	0.44	31.06	58.96	-27.90	QP
0.350	21.70	0.44	22.14	48.96	-26.82	AVERAGE
0.759	22.25	0.43	22.68	56.00	-33.32	QP
0.759	10.69	0.43	11.12	46.00	-34.88	AVERAGE
5.023	28.34	0.48	28.82	60.00	-31.18	QP
5.023	19.72	0.48	20.20	50.00	-29.80	AVERAGE
10.005	22.96	0.40	23.36	50.00	-26.64	AVERAGE
10.005	29.95	0.40	30.35	60.00	-29.65	QP
10.799	25.14	0.48	25.62	50.00	-24.38	AVERAGE
10.799	32.56	0.48	33.04	60.00	-26.96	QP
23.069	26.19	0.96	27.15	60.00	-32.85	QP
23.069	23.66	0.96	24.62	50.00	-25.38	AVERAGE

Remarks: 1. Level = Read Level + Factor
2. Factor = LISN(ISN) Factor + Cable Loss