FCC TEST REPORT

for

47 CFR, Part 15, Subpart C

Equipment	:	RF Wireless Keyboard and Mouse (Keyboard)
Model No.	:	F8E815-KYBD, F8E815-BNDL, F8E815deBNDL, F8E815auBNDL, F8E815fcBNDL, F8E815msBNDL, F8E815ukBNDL
FCC ID	:	K7SF8E815KYBD
Filing Type	:	Certification
Applicant	:	**Belkin Components** 501 West Walnut Street Compton, CA 90220-5221, United States

- The test result refers exclusively to the test presented test model / sample.
- Without written approval of SPORTON International Inc., the test report shall not be reproduced except in full.
- **Certificate or Test Report must not be used by the applicant to claim the product in this test report endorsement by NVLAP or any agency of U.S. government.**

SPORTON International Inc.

6F, No.106, Sec. 1, Hsin Tai Wu Rd., Hsi Chih, Taipei Hsien, Taiwan, R.O.C.

Table of Contents

History of this test report ii
CERTIFICATE OF COMPLIANCE 1
1. General Description of Equipment under Test 2
1.1. Applicant 2
1.2. Manufacturer 2
1.3. Basic Description of Equipment under Test 2
1.4. Feature of Equipment under Test 2
2. Test Configuration of Equipment under Test 3
2.1. Test Manner 3
2.2. Description of Test System 3
2.3. Band edge compliance plot per 15.227(b) 5
2.4. Connection Diagram of Test System 6
3. General Information of Test 7
3.1. Test Facility 7
3.2. Standard for Methods of Measurement 7
3.3. Test in Compliance with 7
3.4. Frequency Range Investigated 7
3.5. Test Distance 7
4. Test of Conducted Powerline 8
5. Test of Radiated Emission 9
5.1. Major Measuring Instruments 9
5.2. Test Procedures 10
5.3. Typical Test Setup Layout of Radiated Emission 11
5.4. Test Result of Radiated Emission 12
6. EMI Suppression Component List 13
7. Antenna Factor & Cable Loss 14
8. List of Measuring Equipments Used 15
9. Uncertainty of Test Site 16
Appendix A. Photographs of EUT ..... A1 ~ A9

History of this test report

Original Report Issue Date: Sep. 12, 2002

■ No additional attachment.

☐ Additional attachment were issued as following record:

Attachment No.	Issue Date	Description

Certificate No. : F273006-01

CERTIFICATE OF COMPLIANCE

for

47 CFR, Part 15, Subpart C

Equipment	:	RF Wireless Keyboard and Mouse (Keyboard)
Model No.	:	F8E815-KYBD, F8E815-BNDL, F8E815deBNDL, F8E815auBNDL, F8E815fcBNDL, F8E815msBNDL, F8E815ukBNDL
FCC ID	:	K7SF8E815KYBD
Applicant	:	**Belkin Components** 501 West Walnut Street Compton, CA 90220-5221, United States

I **HEREBY** CERTIFY THAT :

The measurements shown in this test report were made in accordance with the procedures given in **ANSI C63.4 - 1992** and the energy emitted by this equipment was ***passed*** both radiated and conducted emission limits. Testing was carried out on Aug. 8, 2002 at **SPORTON International Inc.** LAB.

Sep. 16, 2002

K. J. Lin
Manager

SPORTON International Inc.

6F, No.106, Sec. 1, Hsin Tai Wu Rd., Hsi Chih, Ta ipei Hsien, Taiwan, R.O.C.

1. General Description of Equipment under Test

1.1. Applicant

Belkin Components
501 West Walnut Street Compton, CA 90220-5221, United States

1.2. Manufacturer

WEI FU MOLD PLASTIC METAL FACTORY
Da-Ning Industrial Zone Humen Dongguan Guangdong, CHINA

1.3. Basic Description of Equipment under Test

Equipment	: RF Wireless Keyboard and Mouse (Keyboard)
Model No.	: F8E815-KYBD, F8E815-BNDL, F8E815deBNDL, F8E815auBNDL, F8E815fcBNDL, F8E815msBNDL, F8E815ukBNDL
FCC ID	: K7SF8E815KYBD
Trade Name	: Belkin
Power Supply Type	: From Battery (3V)
Power Cord	: N/A

1.4. Feature of Equipment under Test

- Channel (With Multi Task, Paten's Patent)
- Security ID: 256 Sets
- Cordless Technology: Radio Frequency (TDMA technology)
- Carry Frequency: 27.095MHZ
- Modulation Mode: FSK (Frequency Shift Key)
- Transfer Rate: 10 kbps
- Input Power: 3VDC (2*AAA)
- Power Consumption: 10 mA
- RF Power: 500uv/m at 3m
- Switch Activation Mechanism: Membrane
- Indicator LED: 1 LED (Red, Blinking)
- Operation Switch: 1 Link Switch (Tact switch)
- Effective Distance: 2 M
- Battery Life: 6 Months

2. Test Configuration of Equipment under Test

2.1. Test Manner

a. The EUT has been configured and operated pursuant to ANSI C63.4-1992 in a manner which tended to maximize its emission characteristics in a typical application.
b. The complete test system included HP PC, VIEWSONIC Monitor, Belkin RF Mouse, Belkin RF Receiver, HP Printer, ACEEX Modem and EUT for EMI test.
c. Frequency range investigated: conduction 450 KHz to 30 MHz, radiation 30 MHz to 1000MHz.

2.2. Description of Test System

Support Unit 1. -- Personal Computer (HP)

FCC ID	: N/A
Model No.	: VECTRA VL420 DT
Power Supply Type	: Switching
Power Cord	: Non-Shielded
Serial No.	: SP0002
Data Cable	: Shielded, 360 degree via metal backshells
Remark	: This support device was tested to comply with FCC standards and authorized under a declaration of conformity.

Support Unit 2. -- Monitor (VIEWSONIC)

FCC ID	: N/A
Model No.	: VCDTS 21553-3P
Power Supply Type	: Switching
Power Cord	: Non-Shielded
Serial No.	: SP0023
Data Cable	: Shielded, 360 degree via metal backshells, 1.7m
Remark	: This support device was tested to comply with FCC standards and authorized under a declaration of conformity.

Support Unit 3. – RF Mouse (Belkin)

FCC ID	: K7S- F8E815-MSE
Model No.	: F8E815-MSE
Serial No.	: SP0087

Support Unit 4. – RF Receiver (Belkin)

FCC ID	: N/A
Model No.	: F8E815-REX
Serial No.	: SP0087
Remark	: This support device was tested to comply with FCC standards and authorized under a declaration of conformity.

Support Unit 5. -- Printer (HP)

FCC ID	: B94C2642X
Model No.	: C2642A
Power Supply Type	: Linear
Power Cord	: Non-Shielded
Serial No.	: SP0048
Data Cable	: Shielded, 360 degree via metal backshells, 1.8m

Support Unit 6. -- Modem (ACEEX)

FCC ID	: IFAXDM1414
Model No.	: DM1414
Power Supply Type	: Linear
Power Cord	: Non-Shielded
Serial No.	: SP0015
Data Cable	: Shielded, 360 degree via metal backshells, 1.1m

2.3. Band edge compliance plot per 15.227(b).

Horizontal:

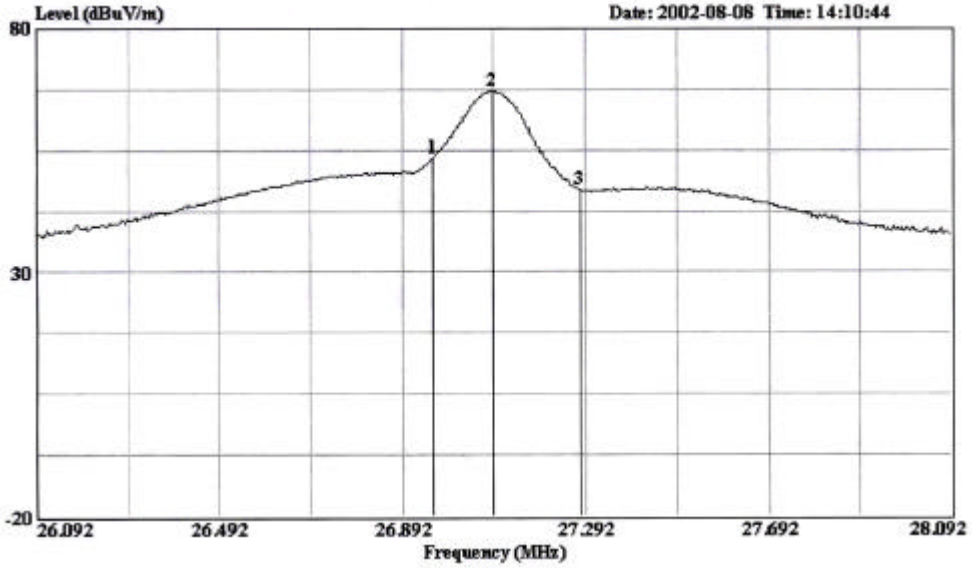

Mark 1 : 26.96MHz
Mark 3 : 27.28MHz
Conformation of the fundamental frequency

Vertical:

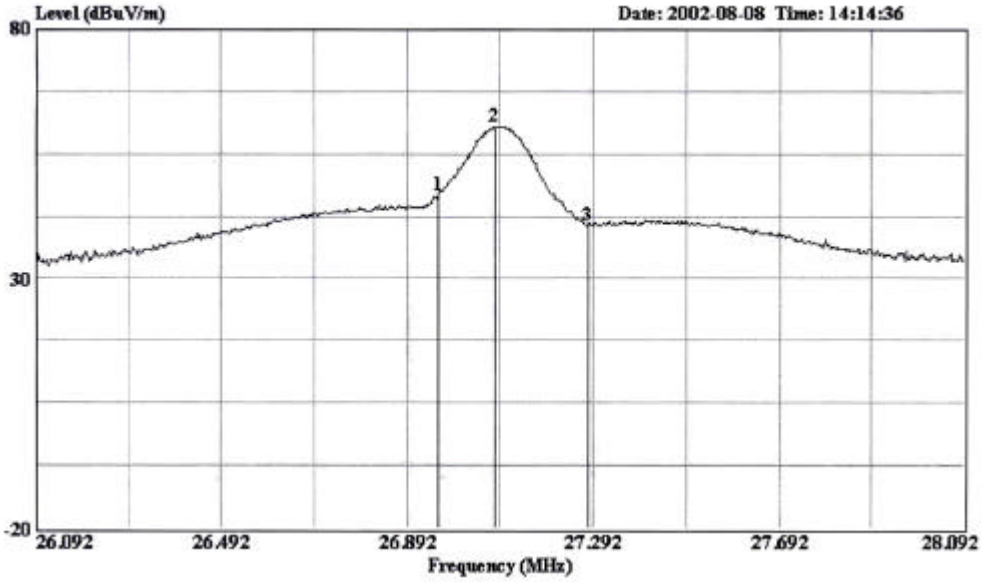

Mark 1 : 26.96MHz
Mark 3 : 27.28MHz
Conformation of the fundamental frequency

2.4. Connection Diagram of Test System

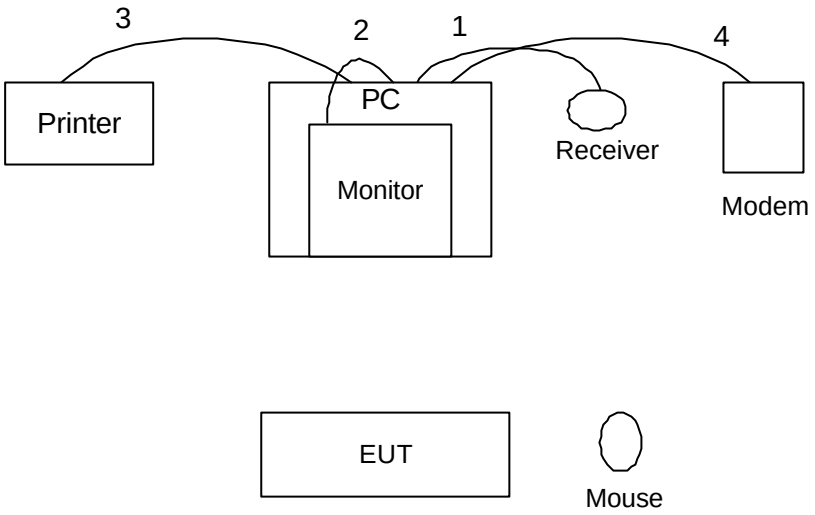

1. The I/O cable is connected from PC to the support unit 4.
2. The I/O cable is connected from PC to the support unit 2.
3. The I/O cable is connected from PC to the support unit 5.
4. The I/O cable is connected from PC to the support unit 6.

3. General Information of Test

3.1. Test Facility

Test Site Location	:	No. 30-2, Lin 6, Diing-Fwu Tsuen, Lin-Kou-Hsiang, Taipei Hsien, Taiwan, R.O.C. TEL : 886-2-2601-1640 FAX : 886-2-2601-1695
Test Site No	:	SH03

3.2. Standard for Methods of Measurement

ANSI C63.4-1992

3.3. Test in Compliance with

FCC Part 15, Subpart C

3.4. Frequency Range Investigated

a. Conduction: from 450 kHz to 30 MHz
b. Radiation : from 30 MHz to 1 GHz

3.5. Test Distance

The test distance of radiated emission from antenna to EUT is 3 M.

4. Test of Conducted Powerline

The power supply of the EUT is from battery.

So the conducted powerline test is not applicable to the EUT.

5. Test of Radiated Emission

Radiated emissions from 30 MHz to 1 GHz were measured with a bandwidth of 120 kHz according to the methods defines in ANSI C63.4-1992. The EUT was placed on a nonmetallic stand in the open-field site, 0.8 meter above the ground plane, as shown in section 5.3. The interface cables and equipment positions were varied within limits of reasonable applications to determine the positions producing maximum radiated emissions.

5.1. Major Measuring Instruments

• Amplifier	(ADVANTEST BB525C)
Attenuation	10 dB
RF Gain	30 dB
Signal Input	9 KHz to 3 GHz
• Spectrum Analyzer	(RAHDE&SCHEARZ & FSP7)
Attenuation	10 dB
Start Frequency	30 MHz
Stop Frequency	1000 MHz
Resolution Bandwidth	120 KHz
Signal Input	9 KHz to 7 GHz

5.2. Test Procedures

a. The EUT was placed on a rotatable table top 0.8 meter above ground.
b. The EUT was set 3 meters from the interference receiving antenna which was mounted on the top of a variable height antenna tower.
c. The table was rotated 360 degrees to determine the position of the highest radiation.
d. The antenna is a half wave dipole and its height is varied between one meter and four meters above ground to find the maximum value of the field strength both horizontal polarization and vertical polarization of the antenna are set to make the measurement.
e. For each suspected emission the EUT was arranged to its worst case and then tune the antenna tower (from 1 M to 4 M) and turn table (from 0 degree to 360 degrees) to find the maximum reading.
f. Set the test-receiver system to Peak or CISPR quasi-peak Detect Function and specified bandwidth with Maximum Hold Mode.
g. If the emission level of the EUT in peak mode was 3 dB lower than the limit specified, then testing will be stopped and peak values of EUT will be reported, otherwise, the emissions which do not have 3 dB margin will be repeated one by one using the quasi-peak method and reported.

5.3. Typical Test Setup Layout of Radiated Emission

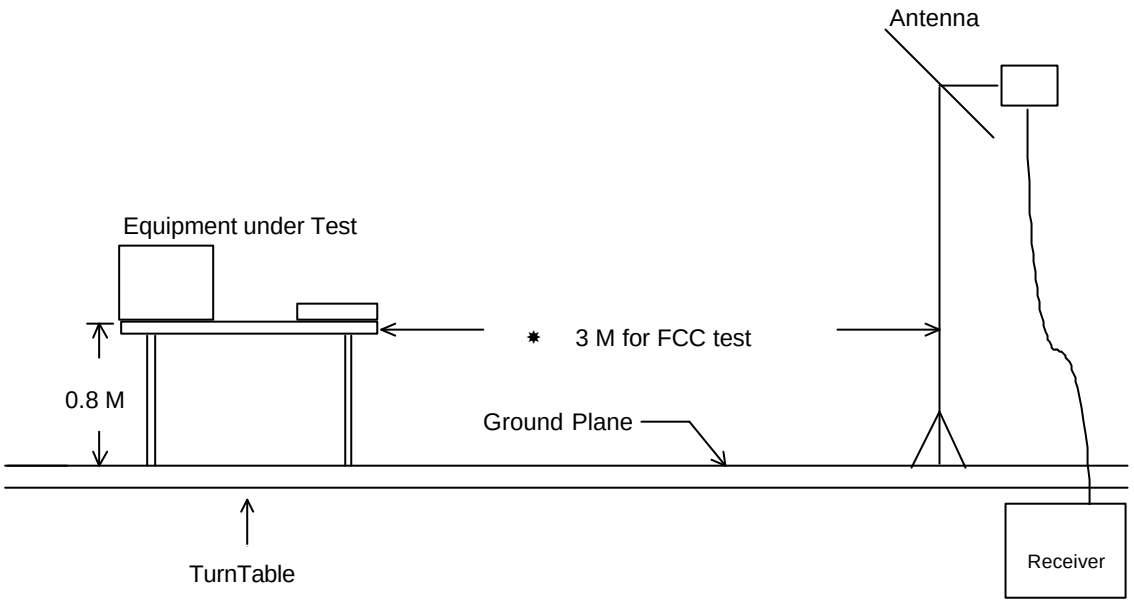

5.4. Test Result of Radiated Emission

- Test Distance : 3 M
- Temperature : 28.4°C
- Relative Humidity : 65 %
- Test Date : Aug. 5, 2002
- Emission level (dBuV/m) = 20 log Emission level (uV/m)
- Corrected Reading : Antenna Factor + Cable Loss + Reading = Emission

The Radiated Emission test was passed at minimum margin
53.490 MHz / 31.86 dBuV/m (HORIZONTAL) Antenna Height 1 Meter, Turntable Degree 260 ^{o}.

- Spurious Emissions:

Frequency	Polarity	Antenna Factor	Cable Loss	Reading	Limits		Emission Level		Margin	Detect
(MHz)		(dB/m)	(dB)	(dBuV)	(dBuV/m)	(uV/m)	(dBuV/m)	(uV/m)	(dB)	Mode
53.490	H	6.85	1.31	23.70	40.00	100.00	31.86	39.17	-8.14	Peak
81.300	H	7.27	1.63	14.17	40.00	100.00	23.07	14.24	-16.93	Peak
108.300	H	11.14	1.90	9.96	43.50	149.62	23.00	14.13	-20.50	Peak
178.500	H	8.73	2.39	15.98	43.50	149.62	27.10	22.65	-16.40	Peak
215.490	H	8.62	2.63	20.23	43.50	149.62	31.48	37.50	-12.02	Peak
53.490	V	6.85	1.31	16.49	40.00	100.00	24.65	17.08	-15.35	Peak

- Field strength of fundamental and harmonics

Frequency	Polarity	Antenna Factor	Cable Loss	Reading	Limits		Emission Level		Margin	Detect
(MHz)		(dB/m)	(dB)	(dBuV)	(dBuV/m)	(uV/m)	(dBuV/m)	(uV/m)	(dB)	Mode
27.090	V	15.40	0.93	36.75	80.00	10000.0	53.08	450.82	-26.92	Peak
27.080	V	15.40	0.93	30.24	80.00	10000.0	46.57	213.06	-33.43	Peak

Test Engineer : Wayne

Wayue Hsu

6. EMI Suppression Component List

No EMI suppression components.

7. Antenna Factor & Cable Loss

Frequency (MHz)	Antenna Factor (dB)	Cable Loss (dB)
30	18.10	0.99
35	16.00	1.07
40	13.29	1.13
45	10.75	1.20
50	8.10	1.26
55	6.40	1.32
60	5.36	1.40
65	4.94	1.41
70	5.19	1.51
75	6.05	1.57
80	6.96	1.60
85	8.04	1.70
90	8.76	1.70
95	9.70	1.75
100	10.30	1.79
110	11.17	1.93
120	11.60	1.95
130	11.23	2.01
140	10.61	2.12
150	10.10	2.20
160	9.20	2.26
170	9.01	2.33
180	8.71	2.40
190	8.80	2.52
200	8.24	2.55
220	8.80	2.64
240	10.72	2.78
260	13.20	2.89
280	12.50	2.98
300	12.96	3.11
320	13.50	3.20
340	13.93	3.25
360	14.39	3.44
380	14.70	3.63
400	15.76	3.50
450	16.35	3.82
500	17.29	4.01
550	18.50	4.16
600	18.43	4.39
650	18.85	4.72
700	18.93	4.71
750	19.75	4.83
800	19.92	5.27
850	20.24	5.22
900	20.30	5.22
950	20.46	5.54
1000	20.80	5.81

8. List of Measuring Equipments Used

Instrument	Manufacturer	Model No.	Serial No.	Characteristics	Calibration Date	Remark
Spectrum Analyzer	RAHDE & SCHEARZ	FSP7	838858/039	9KHz – 7GHz	Jan. 07, 2002	Radiation (SH03)
Amplifier	ADVANTEST	BB525C	CH300001	9KHz – 3GHz	Nov. 15, 2001	Radiation (SH03)
Bilog Antenna	SCHAFFNER	CBL61128	2681	30MHz –2GHz	Dec. 23, 2001	Radiation (SH03)
Turn Table	HD	DS 420	420/649/00	0 ~ 360 degree	N/A	Radiation (SH03)
Antenna Mast	HD	MA 240	240/559/00	1 m - 4 m	N/A	Radiation (SH03)
Half-wave dipole antenna	Schwarzbeck	UHA P VHAP	995+99 1024+1024	30MHz - 1GHz	Sep. 27, 2001	Radiation (SH03)

※ Calibration Interval of instruments listed above is one year.

9. Uncertainty of Test Site

Uncertainty of Radiated Emission Measurement

Contribution	**Probability Distribution**	**3m**
Antenna factor calibration	normal(k=2)	±1
cable loss calibration	normal(k=2)	±0.3
RCV/SPA specification	rectangular	±2
Antenna Directivity	rectangular	±3
Antenna Factor V.S. Height	rectangular	±2
Antenna Factor Interpolation for Frequency	rectangular	±0.25
site imperfection	rectangular	±2
Mismatch Receiver VSWR Γ1=0.09 Antenna VSWR Γ2=0.67 Uncertainty=20log(1-Γ1*Γ2)	U-shaped	±0.54
combined standard uncertainty Ue(y)	**normal**	**±2.7**
Measuring uncertainty for a level of confidence of 95% U=2Ue(y)	**normal (k=2)**	**±5.4**

$U=\sqrt{\{(1/2)^2+(0.3/2)^2+(2^2+0.5^2+2^2+0.25^2+2^2)/3+(0.54)^2/2\}}=2.2$ for 10m test distance

$U=\sqrt{\{(1/2)^2+(0.3/2)^2+(2^2+3^2+2^2+0.25^2+2^2)/3+(0.54)^2/2\}}=2.7$ for 3m test distance

Uncertainty of Conducted Emission Measurement

Contribution	Probability Distribution	150KHz – 30MHz
Cable and I/P attenuator calibration	normal(k=2)	±0.3
RCV/SPA specification	rectangular	±2
LISN coupling specification	rectangular	±1.5
Transducer factor frequency interpolation	rectangular	±0.2
Mismatch Receiver VSWR Γ1=0.09 LISN VSWR Γ2=0.33 Uncertainty=20log(1-Γ1*Γ2)	U-shaped	0.2
combined standard uncertainty Ue(y)	**normal**	**±1.66**
Measuring uncertainty for a level of confidence of 95% U=2Ue(y)	**normal (k=2)**	**±3.32**

$U=\sqrt{\{(0.3/2)^2+(2^2+1.5^2+0.2^2)/3+(0.2)^2/2\}}=1.66$