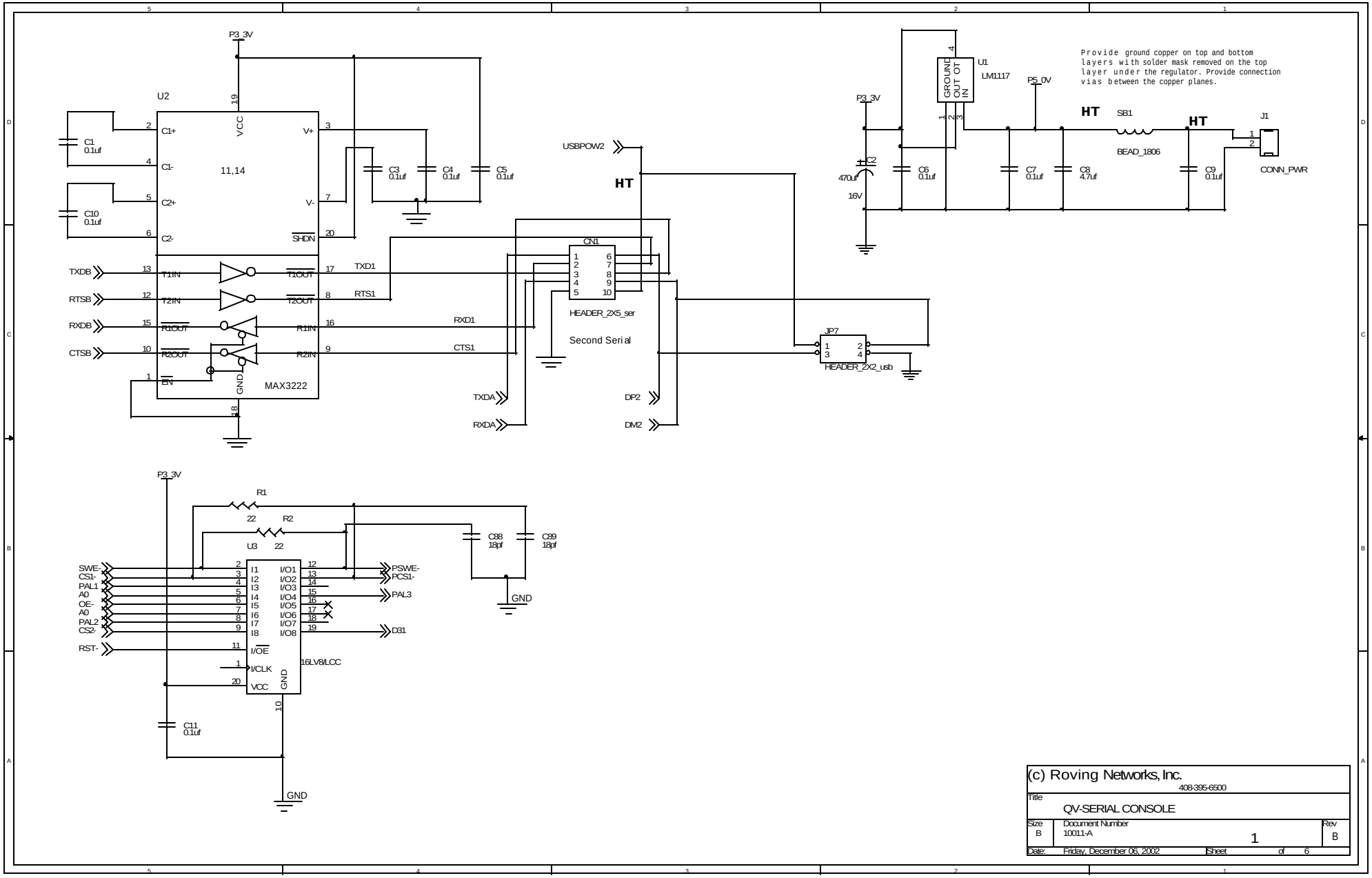
P3_3V
U2
11,14
VCC
C1+
C1-
C2+
C2-
V+
V-
SHDN
C1 0.1uf
C10 0.1uf
C3 0.1uf
C4 0.1uf
C5 0.1uf
TXDB
RTSB
RXDB
CTSB
T1IN
T2IN
R1OUT
R2OUT
T1OUT
T2OUT
R1IN
R2IN
EN
GND
MAX3222
TXD1
RTS1
RXD1
CTS1
USBPOW2
HT
CN1
HEADER_2X5_ser
Second Serial
TXDA
RXDA
DP2
DM2
JP7
HEADER_2X2_usb
U1
LM1117
GROUND
OUT OT
IN
P5_0V
C2
470uf
16V
C6 0.1uf
C7 0.1uf
C8 4.7uf
C9 0.1uf
SB1
BEAD_1806
J1
CONN_PWR
Provide ground copper on top and bottom layers with solder mask removed on the top layer under the regulator. Provide connection vias between the copper planes.
R1
22
R2
22
U3
C88 18pf
C89 18pf
SWE-
CS1-
PAL1
A0
OE-
A0
PAL2
CS2-
RST-
I1
I2
I3
I4
I5
I6
I7
I8
I/O1
I/O2
I/O3
I/O4
I/O5
I/O6
I/O7
I/O8
I/OE
I/CLK
VCC
GND
16LV8/LCC
PSWE-
PCS1-
PAL3
D31
C11 0.1uf
(c) Roving Networks, Inc.
408-395-6500
Title
QV-SERIAL CONSOLE
Size B
Document Number 10011-A
Rev B
Date: Friday, December 06, 2002
Sheet 1 of 6

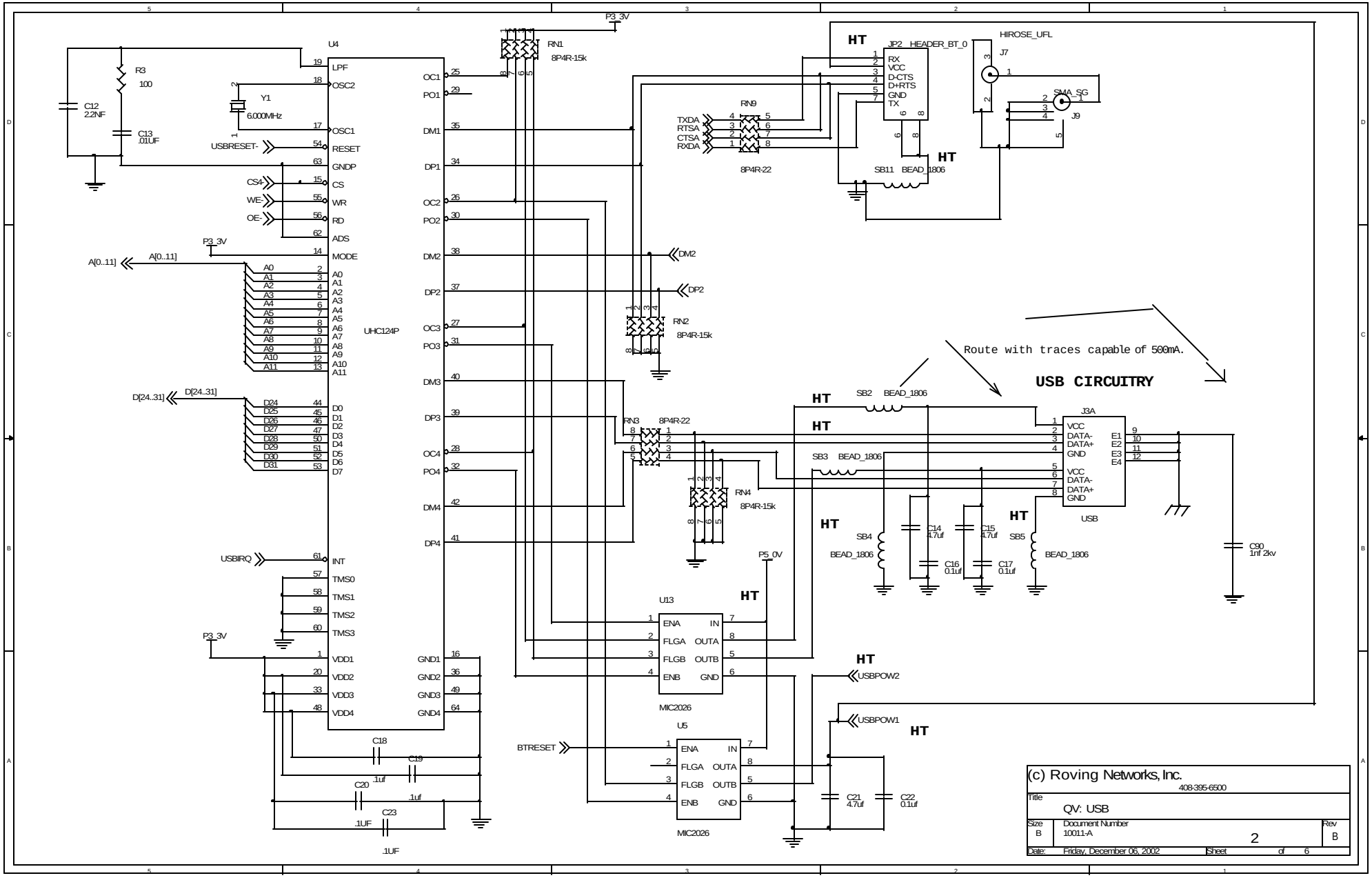

(c) Roving Networks, Inc.
408-395-6500

Title: QV: USB

Size	Document Number	Rev
B	10011-A	B

Date: Friday, December 06, 2002 Sheet 2 of 6

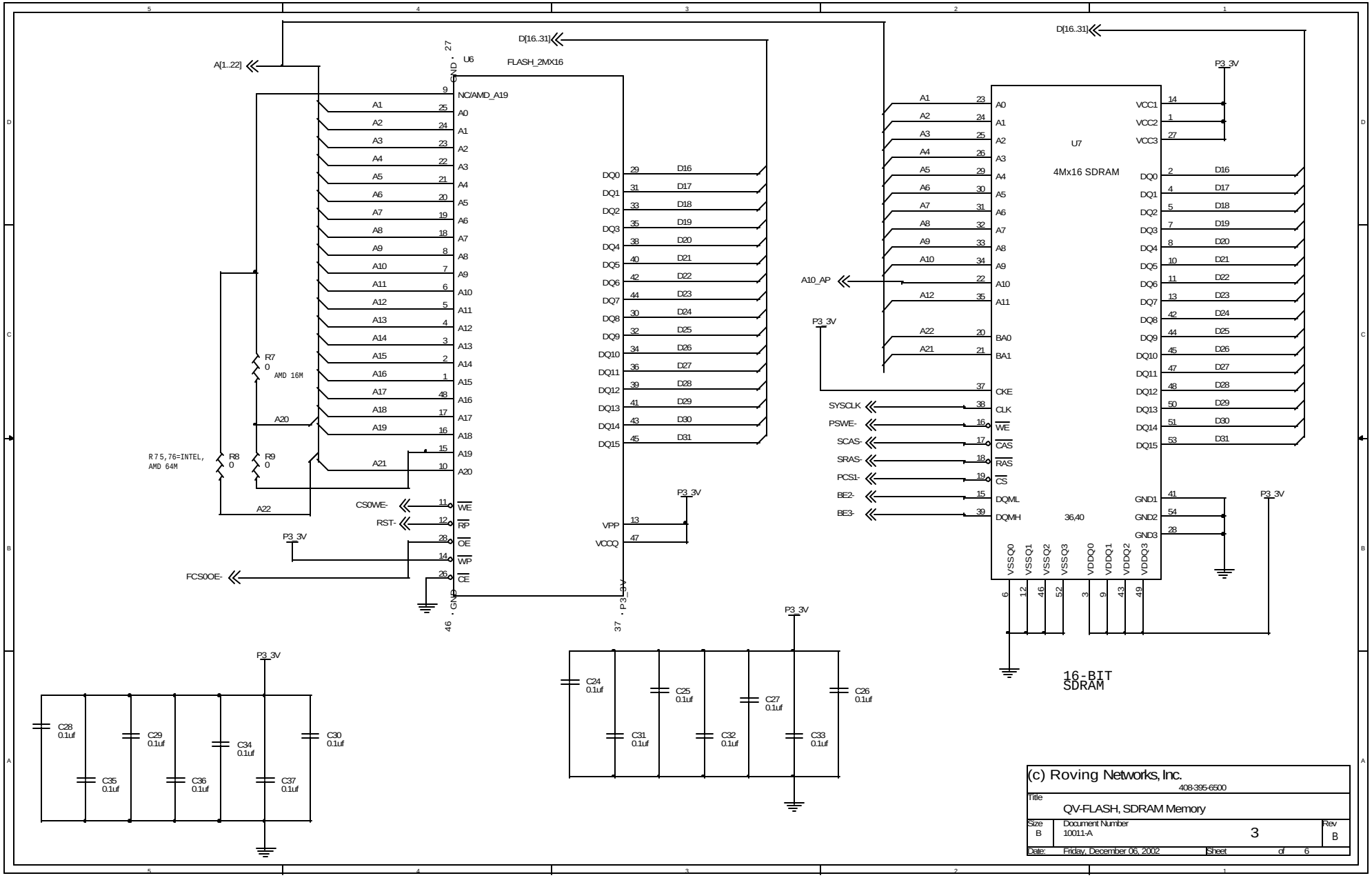
U6
FLASH_2MX16
A[1..22]
D[16..31]
NC/AMD_A19
GND
P3_3V
CS0WE-
RST-
FCS0OE-
R7
0
AMD 16M
R8
0
R9
0
R75,76=INTEL,
AMD 64M
A20
A21
A22
VPP
VCCQ
U7
4Mx16 SDRAM
A10_AP
SYSCLK
PSWE-
SCAS-
SRAS-
PCS1-
BE2-
BE3-
36,40
16-BIT
SDRAM
C24
0.1uf
C25
0.1uf
C26
0.1uf
C27
0.1uf
C28
0.1uf
C29
0.1uf
C30
0.1uf
C31
0.1uf
C32
0.1uf
C33
0.1uf
C34
0.1uf
C35
0.1uf
C36
0.1uf
C37
0.1uf
(c) Roving Networks, Inc.
408-395-6500
Title
QV-FLASH, SDRAM Memory
Size
B
Document Number
10011-A
3
Rev
B
Date: Friday, December 06, 2002
Sheet of 6

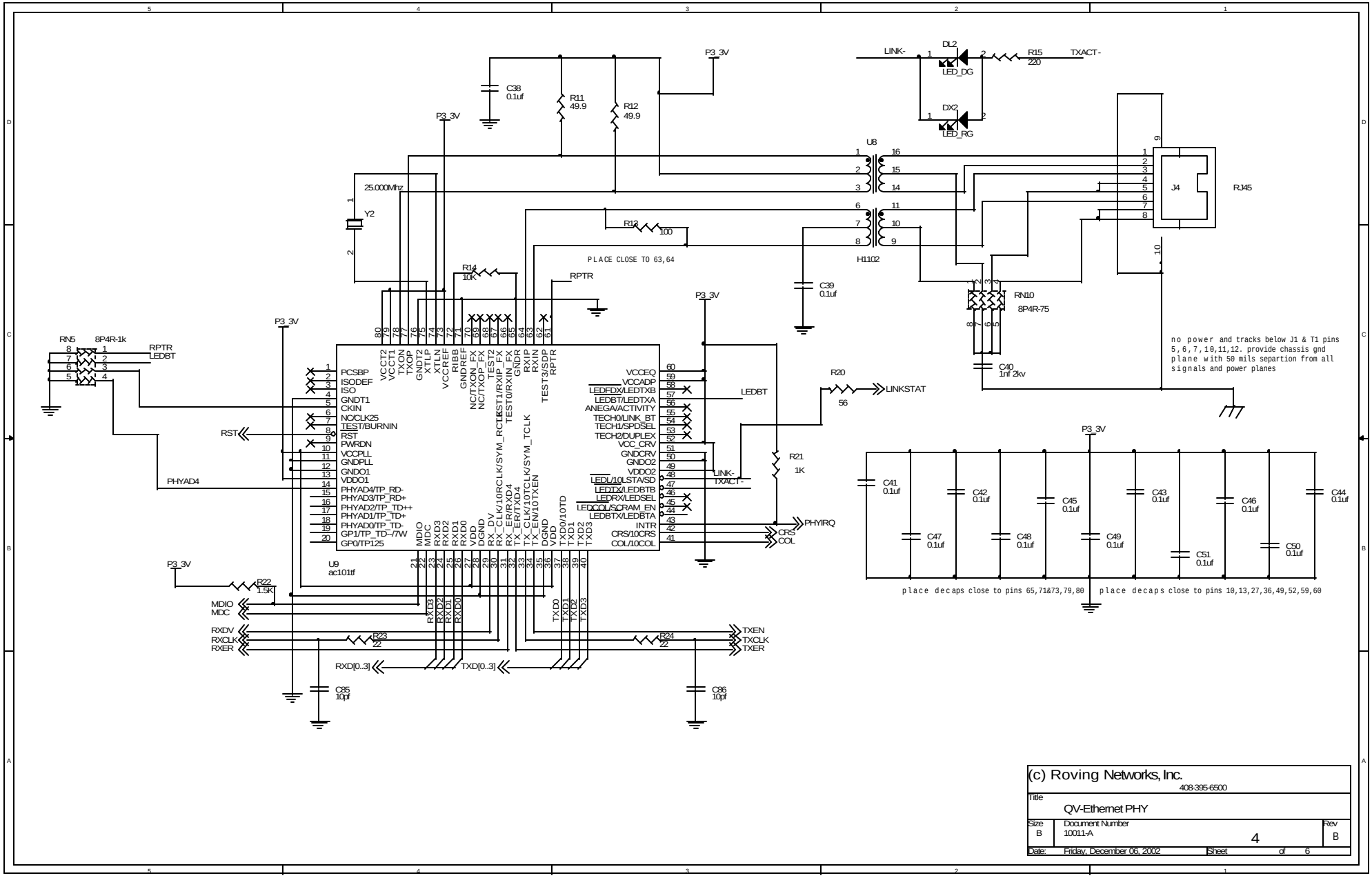

(c) Roving Networks, Inc.
408-395-6500

Title	QV-Ethernet PHY		
Size B	Document Number 10011-A	4	Rev B
Date: Friday, December 06, 2002	Sheet	of 6	

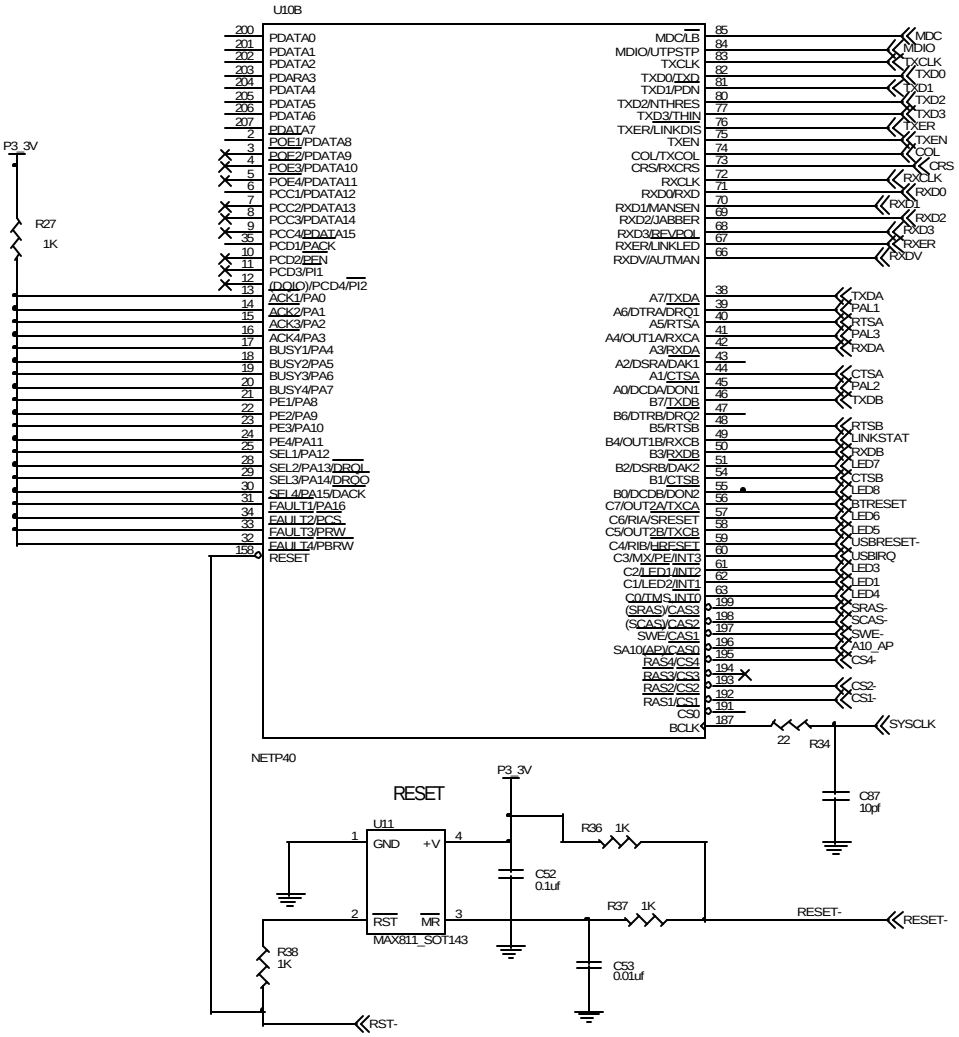

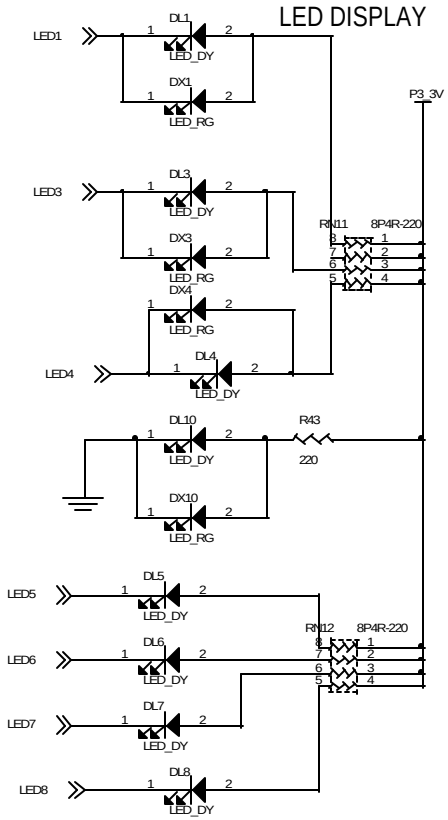

(c) Roving Networks, Inc.
408-395-6500

Title	QV:processor 2	
Size B	Document Number 10011-A	Rev B
Date: Friday, December 06, 2002	Sheet 5 of 6	

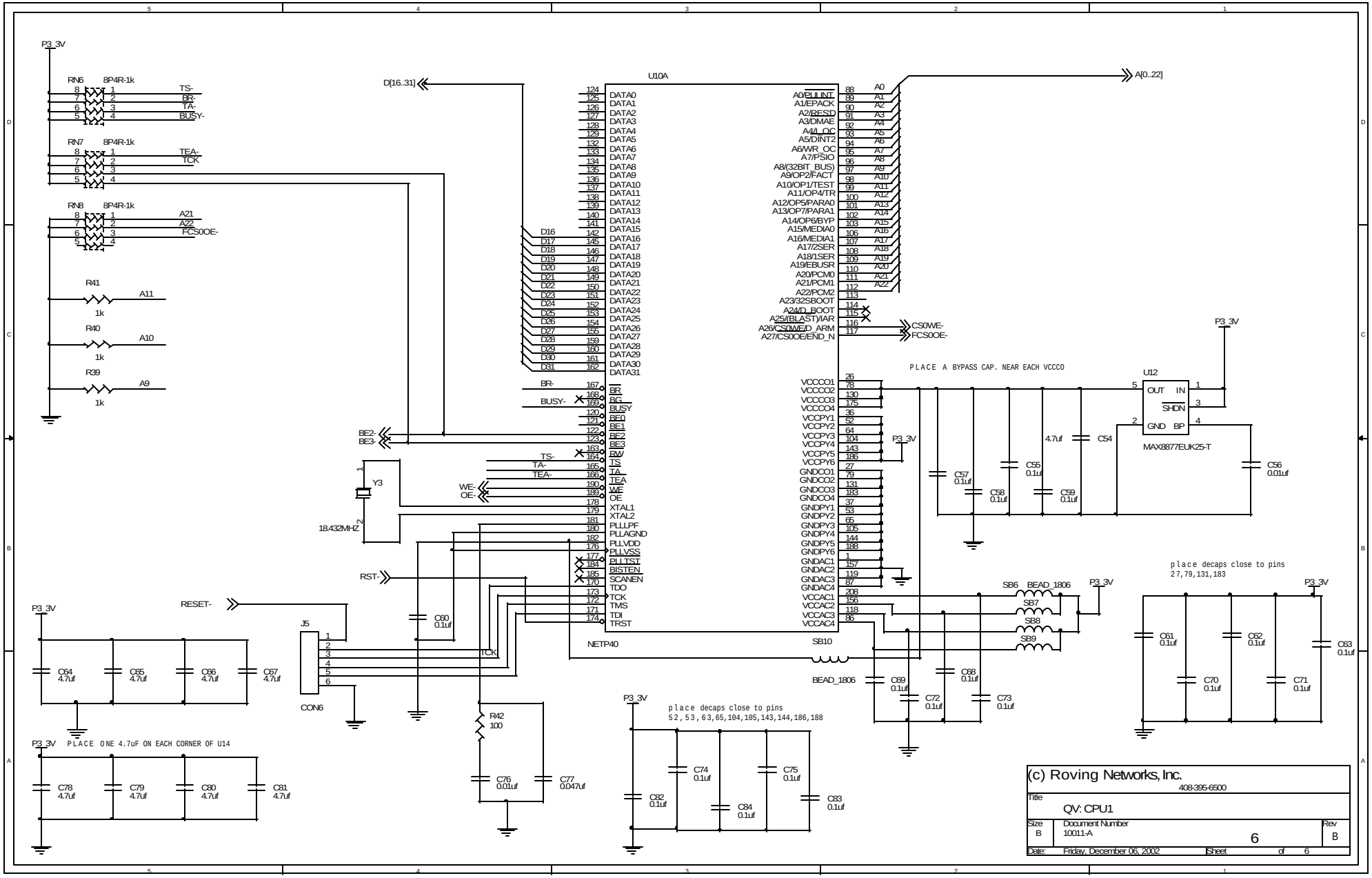
P3_3V
RN6 8P4R-1k
TS-
BR-
TA-
BUSY-
RN7 8P4R-1k
TEA-
TCK
RN8 8P4R-1k
A21
A22
FCS0OE-
R41 1k A11
R40 1k A10
R39 1k A9
D[16..31]
U10A
A[0..22]
CS0WE-
FCS0OE-
BE2-
BE3-
WE-
OE-
Y3
18.432MHZ
RST-
RESET-
J5
CON6
TCK
NETP40
SB10
BEAD_1806
PLACE A BYPASS CAP. NEAR EACH VCCCO
U12
MAX8877EUK25-T
OUT IN
SHDN
GND BP
C54 4.7uf
C55 0.1uf
C56 0.01uf
C57 0.1uf
C58 0.1uf
C59 0.1uf
C60 0.1uf
C61 0.1uf
C62 0.1uf
C63 0.1uf
C64 4.7uf
C65 4.7uf
C66 4.7uf
C67 4.7uf
C68 0.1uf
C69 0.1uf
C70 0.1uf
C71 0.1uf
C72 0.1uf
C73 0.1uf
C74 0.1uf
C75 0.1uf
C76 0.01uf
C77 0.047uf
C78 4.7uf
C79 4.7uf
C80 4.7uf
C81 4.7uf
C82 0.1uf
C83 0.1uf
C84 0.1uf
SB6 BEAD_1806
SB7
SB8
SB9
R42 100
PLACE ONE 4.7uF ON EACH CORNER OF U14
place decaps close to pins 52,53,63,65,104,105,143,144,186,188
place decaps close to pins 27,79,131,183
(c) Roving Networks, Inc.
408-395-6500
Title
QV: CPU1
Size B
Document Number 10011-A
Rev B
Date: Friday, December 06, 2002
Sheet 6 of 6