承　　認　　書

SPECIFICATION FOR APPROVAL

客　　戶： CUSTOMER:	SZ003
客 戶 料 號： CUST P/N:	
泛 亞 料 號： FINE P/N:	
產 品 型 號： DESC:	FYSZ0032025022603
日　　期： DATE:	2025/03/03
版　　本： Version:	A.0

CUSTOMER AUTHORIZED SIGNATURE/客户承认签核		

擬制 PREPARED BY	審核 CHECKED BY	批准 APPROVED BY
彭霆茵	韦炳福	胡伟

东莞市泛亚电子有限公司

Dongguan FANYA Electronics Co., LTD

地址：东莞市石碣镇刘屋科技东路 194 号

TEL：0769-22490287 / 22452492

FAX：0769-22499451

E-mail：fineelec@163.com

东莞市泛亚电子有限公司保密文件

版本變更履歷

Version Change History

版本 Rev.	變　更　前 Before Change	變　更　後 After Change	更 改 日 期 Change Date	批　　准 Approved By
A.0	新发行	----	2025/03/03	胡伟

东莞市泛亚电子有限公司保密文件

SPECIFICATION

產 品 型 號: DESC	FYSZ0032025022603	版本 Rev: A.0	客户 CUST:	SZ003
			泛亚料号 Fine P/N:	
			客户料号 CUST P/N:	

一、尺寸 DIMENSION:(mm)

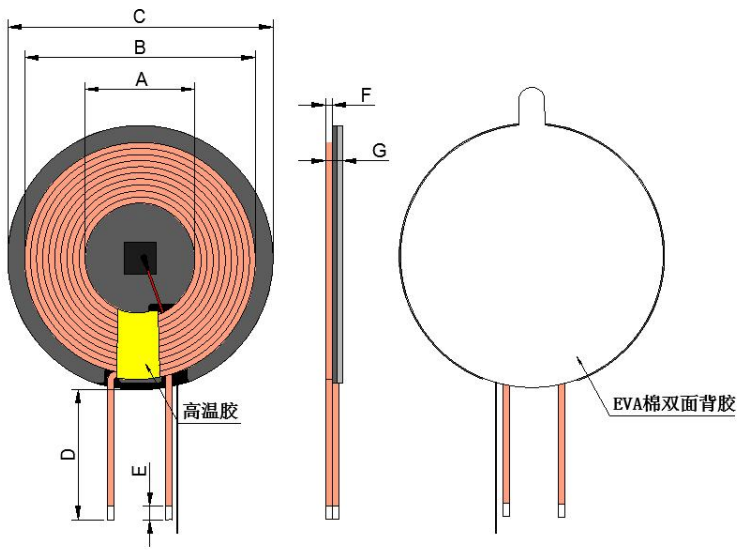

A	20.5±0.5
B	43±1.5
C	49.5±1
D	15±2
E	2±1
F	1.25 Max
G	3.6 Max（不含离型纸）

注：
1. 引线交叉出线，出线位置包 8mm 宽高温胶带；
2. 线圈反贴硬磁片，硬磁片尺寸 Φ49.5*5.3*1.0mm 开孔开 L 双槽；
3. 磁片背面贴 Φ49*1.0mm 带手撕位 EVA 棉双面背胶；
4. 磁片中间贴 F6*6*0.5mm EVA 棉，EVA 棉上贴 NTC，NTC 型号：10K/3380，长度 35mm±2，镀锡层 2mm±2；

二、原理图 SCHEMATIC DIAGRAM:

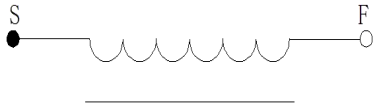

三、绕线参数 Winding Specification:

序号 NO.	端子 TERMINAL		线径 WIRE	圈数 Turns	绕线方向 Winding Direction
1	S	F	丝包线 0.08*105P	10Ts	CCW

四、电气特性 ELECTRICAL CHARACTERISTICS:

温度 TEMPERATURE:25±10°C，湿度 RELATIVE HUMIDITY:65±20%

序号 NO.	项目 ITEM	端子 TERMINAL	标准 SPECIFICATION	测试条件 TEST FREQUENCY	测试仪器 TEST EQUIPMENTS
1	IND	S-F	3.8uH±10%单线圈	100KHz/1.0V	TH2810
2	IND	S-F	6.3uH±10%加磁片	100KHz/1.0V	TH2810
3	DCR	S-F	≤70mΩ	100KHz/1.0V	TH2810

擬制/日期 PREPARED BY/DATE	審核/日期 CHECKED BY/DATE	批准/日期 APPROVED BY
彭霆茵 2025/03/03	韦炳福 2025/03/03	胡伟 2025/03/03

东莞市泛亚电子有限公司保密文件

SPECIFICATION

產 品 型 號: DESC	FYSZ0032025022603	版本 Rev: A.0	客戶 CUST:	SZ003
			泛亚料号 Fine P/N:	
			客户料号 CUST P/N:	

五、包装 PACKONG:

5.1 包装图片 Packing pictures:

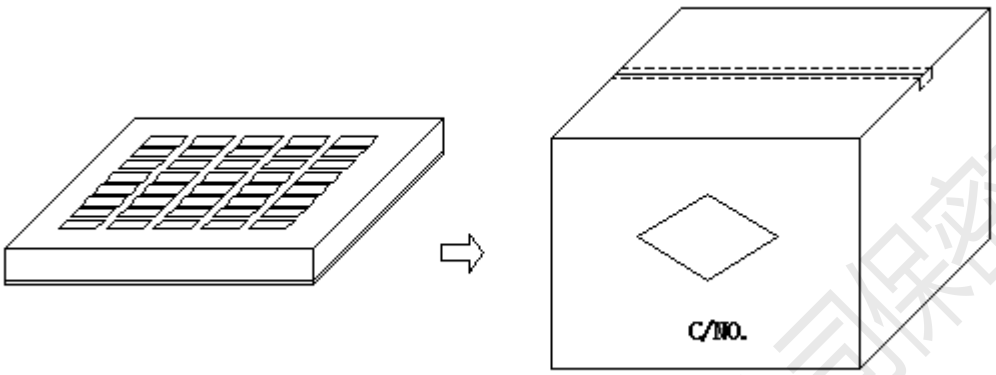

5.2 包装数量及规格 Packing Quantity:

项目 Item	数量 Quantity	材料规格 Material
盒 Box	200 Pcs	370*265*55mm
箱 Big Carton	1000 Pcs	420*270*310mm

5.3 包装以现有包装盘为参照标准，以实际出货包装为准,如有特需要求可以定制。
The packaging shall be based on the existing packing plate and the actual delivery package shall prevail. If there is any requirement, we can customize it.

东莞市泛亚电子有限公司保密文件

擬制/日期 PREPARED BY/DATE	審核/日期 CHECKED BY/DATE	批准/日期 APPROVED BY
彭霆茵 2025/03/03	韦炳福 2025/03/03	胡伟 2025/03/03

SPECIFICATION

產 品 型 號: DESC	FYSZ0032025022603	版本 Rev: A.0	客戶 CUST:	SZ003
			泛亚料号 Fine P/N:	
			客户料号 CUST P/N:	

六、材料清单 Material list:

序号 number	材 料 名 称 Material name	品 名 描 述 Description	制 造 商 Manufacturer
1	线材	丝包线 0.08*105P	
2	无铅锡条	无铅锡条	
3	磁片	Φ49.5*5.3*1.0mm 开孔开 L 双槽	
4	泡棉背胶	Φ49*1.0mm 带手撕位 EVA 棉双面背胶	
5	高温胶	8mm 宽	
6	EVA 棉	F6*6*0.5mm	
7	NTC	型号：10K/3380，长度 35mm±2，镀锡层 2mm±2	
8	胶水	胶水	

东莞市泛亚电子有限公司保密文件

擬制/日期 PREPARED BY/DATE	審核/日期 CHECKED BY/DATE	批准/日期 APPROVED BY
彭霆茵 2025/03/03	韦炳福 2025/03/03	胡伟 2025/03/03

Test Report

No.: SZXEC24001762603 **Date:** Jun 25, 2024

Client Name: DONGGUAN FINE ELECTRONICS LIMITED

Client Address: 194 KEJI EAST ROAD, SHIJIE TOWN, DONGGUAN CITY, GUANGDONG PROVINCE

Sample Name: Coil

The above sample(s) and information were provided by the client.

SGS Job No.: SZP24-024492

Sample Receiving Date: Jun 04, 2024

Testing Period: Jun 04, 2024 ~ Jun 12, 2024

Test Requested: Select test(s) as requested by the client.

Test Method(s): Please refer to next page(s).

Test Result(s): Please refer to next page(s).

Test Requirement	Conclusion
Halogen	See Results

Signed for and on behalf of
SGS-CSTC Standards Technical Services Co., Ltd. Shenzhen Branch

Tina

Tina Fan
Approved Signatory

scan to see the report

511D8C18

Unless otherwise agreed in writing, this document is issued by the Company subject to its General Conditions of Service printed overleaf, available on request or accessible at http://www.sgs.com/en/Terms-and-Conditions.aspx and, for electronic format documents, subject to Terms and Conditions for Electronic Documents at http://www.sgs.com/en/Terms-and-Conditions/Terms-e-Document.aspx. Attention is drawn to the limitation of liability, indemnification and jurisdiction issues defined therein. Any holder of this document is advised that information contained hereon reflects the Company's findings at the time of its intervention only and within the limits of Client's instructions, if any. The Company's sole responsibility is to its Client and this document does not exonerate parties to a transaction from exercising all their rights and obligations under the transaction documents. This document cannot be reproduced except in full, without prior written approval of the Company. Any unauthorized alteration, forgery or falsification of the content or appearance of this document is unlawful and offenders may be prosecuted to the fullest extent of the law. Unless otherwise stated the results shown in this test report refer only to the sample(s) tested .

Attention: To check the authenticity of testing /inspection report & certificate, please contact us at telephone: (86-755) 8307 1443, or email: CN.Doccheck@sgs.com

SGS-CSTC Standards Technical Services Co., Ltd. Shenzhen Branch Testing Center Chemical Laboratory

Room 101-901, Plant 4 & Room 101, Plant 2 & Room 101, Plant 3 & Room 301-501, Plant 3, Jianghao (Bantian) Industrial Plant Area, No. 430, Jihua Road, Bantian Community, Bantian Street, Longgang District, Shenzhen, Guangdong, China 518129 www.sgsgroup.com.cn

中国·广东·深圳市龙岗区坂田街道坂田社区吉华路430号江灏（坂田）工业厂区厂房4号101-901、2号101、3号101、3号301-501 邮编:518129 t (86-755) 25328888 sgs.china@sgs.com

Member of the SGS Group (SGS SA)

Test Result(s):

Test Part Description：

SN ID	Sample No.	SGS Sample ID	Description
SN1	A1	SZX24-0017626-0001.C001	Copper-colored metal wire with colorless transparent surface A1#
SN2	A2	SZX24-0017626-0001.C002	Silvery metal wire with red surface A2#
SN3	A3	SZX24-0017626-0001.C003	White material A3#
SN4	A4	SZX24-0017626-0001.C004	White material A4#
SN5	A5	SZX24-0017626-0001.C005	Dark grey core A5#
SN6	A6	SZX24-0017626-0001.C006	Silvery metal A6#

Remarks:

(1) 1 mg/kg = 1 ppm = 0.0001%
(2) MDL = Method Detection Limit
(3) ND = Not Detected (< MDL)
(4) "-" = Not Regulated

Halogen

Test Method: With reference to EN 14582:2016, analysis was performed by IC.

Test Item(s)	Unit(s)	MDL	A1	A2	A3
Fluorine(F)	mg/kg	20	ND	ND	ND
Chlorine(Cl)	mg/kg	50	ND	ND	ND
Bromine(Br)	mg/kg	50	ND	ND	ND
Iodine(I)	mg/kg	50	ND	ND	ND

Test Item(s)	Unit(s)	MDL	A4	A5	A6
Fluorine(F)	mg/kg	20	ND	ND	ND
Chlorine(Cl)	mg/kg	50	ND	ND	ND
Bromine(Br)	mg/kg	50	ND	ND	ND
Iodine(I)	mg/kg	50	ND	ND	ND

Unless otherwise stated, the decision rule for conformity reporting is based on Binary Statement for Simple Acceptance Rule (*w*=0) stated in ILAC-G8:09/2019.

Unless otherwise agreed in writing, this document is issued by the Company subject to its General Conditions of Service printed overleaf, available on request or accessible at http://www.sgs.com/en/Terms-and-Conditions.aspx and, for electronic format documents, subject to Terms and Conditions for Electronic Documents at http://www.sgs.com/en/Terms-and-Conditions/Terms-e-Document.aspx. Attention is drawn to the limitation of liability, indemnification and jurisdiction issues defined therein. Any holder of this document is advised that information contained hereon reflects the Company's findings at the time of its intervention only and within the limits of Client's instructions, if any. The Company's sole responsibility is to its Client and this document does not exonerate parties to a transaction from exercising all their rights and obligations under the transaction documents. This document cannot be reproduced except in full, without prior written approval of the Company. Any unauthorized alteration, forgery or falsification of the content or appearance of this document is unlawful and offenders may be prosecuted to the fullest extent of the law. Unless otherwise stated the results shown in this test report refer only to the sample(s) tested .
Attention: To check the authenticity of testing /inspection report & certificate, please contact us at telephone: (86-755) 8307 1443, or email: CN.Doccheck@sgs.com
SGS-CSTC Standards Technical Services Co., Ltd. Shenzhen Branch Testing Center Chemical Laboratory
Room 101-901, Plant 4 & Room 101, Plant 2 & Room 101, Plant 3 & Room 301-501, Plant 3, Jianghao (Bantian) Industrial Plant Area, No. 430, Jihua Road, Bantian Community, Bantian Street, Longgang District, Shenzhen, Guangdong, China 518129 www.sgsgroup.com.cn
中国·广东·深圳市龙岗区坂田街道坂田社区吉华路430号江灏（坂田）工业厂区厂房4号101-901、2号101、3号101、3号301-501 邮编:518129 t (86-755) 25328888 sgs.china@sgs.com
Member of the SGS Group (SGS SA)

ATTACHMENTS

Halogen Testing Flow Chart

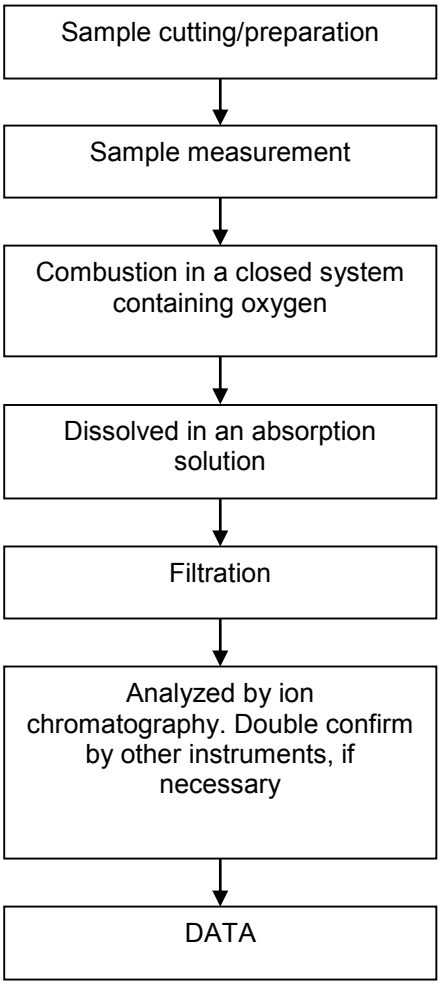

Unless otherwise agreed in writing, this document is issued by the Company subject to its General Conditions of Service printed overleaf, available on request or accessible at http://www.sgs.com/en/Terms-and-Conditions.aspx and, for electronic format documents, subject to Terms and Conditions for Electronic Documents at http://www.sgs.com/en/Terms-and-Conditions/Terms-e-Document.aspx. Attention is drawn to the limitation of liability, indemnification and jurisdiction issues defined therein. Any holder of this document is advised that information contained hereon reflects the Company's findings at the time of its intervention only and within the limits of Client's instructions, if any. The Company's sole responsibility is to its Client and this document does not exonerate parties to a transaction from exercising all their rights and obligations under the transaction documents. This document cannot be reproduced except in full, without prior written approval of the Company. Any unauthorized alteration, forgery or falsification of the content or appearance of this document is unlawful and offenders may be prosecuted to the fullest extent of the law. Unless otherwise stated the results shown in this test report refer only to the sample(s) tested .

Attention: To check the authenticity of testing /inspection report & certificate, please contact us at telephone: (86-755) 8307 1443, or email: CN.Doccheck@sgs.com

SGS-CSTC Standards Technical Services Co., Ltd. Shenzhen Branch Testing Center Chemical Laboratory

Room 101-901, Plant 4 & Room 101, Plant 2 & Room 101, Plant 3 & Room 301-501, Plant 3, Jianghao (Bantian) Industrial Plant Area, No. 430, Jihua Road, Bantian Community, Bantian Street, Longgang District, Shenzhen, Guangdong, China 518129 www.sgsgroup.com.cn

中国·广东·深圳市龙岗区坂田街道坂田社区吉华路430号江灏（坂田）工业厂区厂房4号101-901、2号101、3号101、3号301-501 邮编:518129 t (86-755) 25328888 sgs.china@sgs.com

Member of the SGS Group (SGS SA)

Sample Photo:

SZX24-0017626-0001.C001

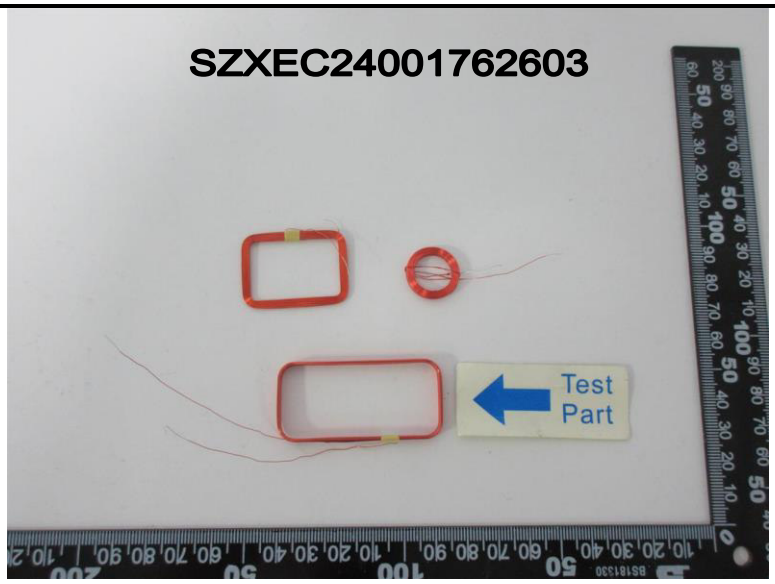

SZX24-0017626-0001.C002

Unless otherwise agreed in writing, this document is issued by the Company subject to its General Conditions of Service printed overleaf, available on request or accessible at http://www.sgs.com/en/Terms-and-Conditions.aspx and, for electronic format documents, subject to Terms and Conditions for Electronic Documents at http://www.sgs.com/en/Terms-and-Conditions/Terms-e-Document.aspx. Attention is drawn to the limitation of liability, indemnification and jurisdiction issues defined therein. Any holder of this document is advised that information contained hereon reflects the Company's findings at the time of its intervention only and within the limits of Client's instructions, if any. The Company's sole responsibility is to its Client and this document does not exonerate parties to a transaction from exercising all their rights and obligations under the transaction documents. This document cannot be reproduced except in full, without prior written approval of the Company. Any unauthorized alteration, forgery or falsification of the content or appearance of this document is unlawful and offenders may be prosecuted to the fullest extent of the law. Unless otherwise stated the results shown in this test report refer only to the sample(s) tested .

Attention: To check the authenticity of testing /inspection report & certificate, please contact us at telephone: (86-755) 8307 1443, or email: CN.Doccheck@sgs.com

SGS-CSTC Standards Technical Services Co., Ltd. Shenzhen Branch Testing Center Chemical Laboratory

Room 101-901, Plant 4 & Room 101, Plant 2 & Room 101, Plant 3 & Room 301-501, Plant 3, Jianghao (Bantian) Industrial Plant Area, No. 430, Jihua Road, Bantian Community, Bantian Street, Longgang District, Shenzhen, Guangdong, China 518129 www.sgsgroup.com.cn

中国·广东·深圳市龙岗区坂田街道坂田社区吉华路430号江灏（坂田）工业厂区厂房4号101-901、2号101、3号101、3号301-501 邮编:518129 t (86-755) 25328888 sgs.china@sgs.com

Member of the SGS Group (SGS SA)

SZX24-0017626-0001.C003

SZX24-0017626-0001.C004

Unless otherwise agreed in writing, this document is issued by the Company subject to its General Conditions of Service printed overleaf, available on request or accessible at http://www.sgs.com/en/Terms-and-Conditions.aspx and, for electronic format documents, subject to Terms and Conditions for Electronic Documents at http://www.sgs.com/en/Terms-and-Conditions/Terms-e-Document.aspx. Attention is drawn to the limitation of liability, indemnification and jurisdiction issues defined therein. Any holder of this document is advised that information contained hereon reflects the Company's findings at the time of its intervention only and within the limits of Client's instructions, if any. The Company's sole responsibility is to its Client and this document does not exonerate parties to a transaction from exercising all their rights and obligations under the transaction documents. This document cannot be reproduced except in full, without prior written approval of the Company. Any unauthorized alteration, forgery or falsification of the content or appearance of this document is unlawful and offenders may be prosecuted to the fullest extent of the law. Unless otherwise stated the results shown in this test report refer only to the sample(s) tested .

Attention: To check the authenticity of testing /inspection report & certificate, please contact us at telephone: (86-755) 8307 1443, or email: CN.Doccheck@sgs.com

SGS-CSTC Standards Technical Services Co., Ltd. Shenzhen Branch Testing Center Chemical Laboratory

Room 101-901, Plant 4 & Room 101, Plant 2 & Room 101, Plant 3 & Room 301-501, Plant 3, Jianghao (Bantian) Industrial Plant Area, No. 430, Jihua Road, Bantian Community, Bantian Street, Longgang District, Shenzhen, Guangdong, China 518129 www.sgsgroup.com.cn

中国·广东·深圳市龙岗区坂田街道坂田社区吉华路430号江灏（坂田）工业厂区厂房4号101-901、2号101、3号101、3号301-501 邮编:518129 t (86-755) 25328888 sgs.china@sgs.com

Member of the SGS Group (SGS SA)

SZX24-0017626-0001.C005

SZX24-0017626-0001.C006

SGS authenticate the photo on original report only

*** End of Report ***

Unless otherwise agreed in writing, this document is issued by the Company subject to its General Conditions of Service printed overleaf, available on request or accessible at http://www.sgs.com/en/Terms-and-Conditions.aspx and, for electronic format documents, subject to Terms and Conditions for Electronic Documents at http://www.sgs.com/en/Terms-and-Conditions/Terms-e-Document.aspx. Attention is drawn to the limitation of liability, indemnification and jurisdiction issues defined therein. Any holder of this document is advised that information contained hereon reflects the Company's findings at the time of its intervention only and within the limits of Client's instructions, if any. The Company's sole responsibility is to its Client and this document does not exonerate parties to a transaction from exercising all their rights and obligations under the transaction documents. This document cannot be reproduced except in full, without prior written approval of the Company. Any unauthorized alteration, forgery or falsification of the content or appearance of this document is unlawful and offenders may be prosecuted to the fullest extent of the law. Unless otherwise stated the results shown in this test report refer only to the sample(s) tested .

Attention: To check the authenticity of testing /inspection report & certificate, please contact us at telephone: (86-755) 8307 1443, or email: CN.Doccheck@sgs.com

SGS-CSTC Standards Technical Services Co., Ltd. Shenzhen Branch Testing Center Chemical Laboratory

Room 101-901, Plant 4 & Room 101, Plant 2 & Room 101, Plant 3 & Room 301-501, Plant 3, Jianghao (Bantian) Industrial Plant Area, No. 430, Jihua Road, Bantian Community, Bantian Street, Longgang District, Shenzhen, Guangdong, China 518129 www.sgsgroup.com.cn

中国·广东·深圳市龙岗区坂田街道坂田社区吉华路430号江灏（坂田）工业厂区厂房4号101-901、2号101、3号101、3号301-501 邮编:518129 t (86-755) 25328888 sgs.china@sgs.com

Member of the SGS Group (SGS SA)

Test Report

No.: SZXEC24001762601 **Date:** Jun 25, 2024

Client Name: DONGGUAN FINE ELECTRONICS LIMITED

Client Address: 194 KEJI EAST ROAD, SHIJIE TOWN, DONGGUAN CITY, GUANGDONG PROVINCE

Sample Name: Coil

The above sample(s) and information were provided by the client.

SGS Job No.: SZP24-024492

Sample Receiving Date: Jun 04, 2024

Testing Period: Jun 04, 2024 ~ Jun 12, 2024

Test Requested: Select test(s) as requested by the client.

Test Method(s): Please refer to next page(s).

Test Result(s): Please refer to next page(s).

Test Requirement	Conclusion
EU RoHS Directive (EU) 2015/863 amending Annex II to Directive 2011/65/EU - Lead, Mercury, Cadmium, Hexavalent chromium, Polybrominated biphenyls (PBB), Polybrominated diphenyl ethers (PBDE), Bis(2-ethylhexyl) phthalate (DEHP), Butyl benzyl phthalate (BBP), Dibutyl phthalate (DBP) and Diisobutyl phthalate (DIBP)	Pass

Signed for and on behalf of
SGS-CSTC Standards Technical Services Co., Ltd. Shenzhen Branch

Tina

Tina Fan
Approved Signatory

scan to see the report

E179B782

Unless otherwise agreed in writing, this document is issued by the Company subject to its General Conditions of Service printed overleaf, available on request or accessible at http://www.sgs.com/en/Terms-and-Conditions.aspx and, for electronic format documents, subject to Terms and Conditions for Electronic Documents at http://www.sgs.com/en/Terms-and-Conditions/Terms-e-Document.aspx. Attention is drawn to the limitation of liability, indemnification and jurisdiction issues defined therein. Any holder of this document is advised that information contained hereon reflects the Company's findings at the time of its intervention only and within the limits of Client's instructions, if any. The Company's sole responsibility is to its Client and this document does not exonerate parties to a transaction from exercising all their rights and obligations under the transaction documents. This document cannot be reproduced except in full, without prior written approval of the Company. Any unauthorized alteration, forgery or falsification of the content or appearance of this document is unlawful and offenders may be prosecuted to the fullest extent of the law. Unless otherwise stated the results shown in this test report refer only to the sample(s) tested .

Attention: To check the authenticity of testing /inspection report & certificate, please contact us at telephone: (86-755) 8307 1443, or email: CN.Doccheck@sgs.com

SGS-CSTC Standards Technical Services Co., Ltd. Shenzhen Branch Testing Center Chemical Laboratory

Room 101-901, Plant 4 & Room 101, Plant 2 & Room 101, Plant 3 & Room 301-501, Plant 3, Jianghao (Bantian) Industrial Plant Area, No. 430, Jihua Road, Bantian Community, Bantian Street, Longgang District, Shenzhen, Guangdong, China 518129 www.sgsgroup.com.cn

中国·广东·深圳市龙岗区坂田街道坂田社区吉华路430号江灏（坂田）工业厂区厂房4号101-901、2号101、3号101、3号301-501 邮编:518129 t (86-755) 25328888 sgs.china@sgs.com

Member of the SGS Group (SGS SA)

Test Result(s):

Test Part Description：

SN ID	Sample No.	SGS Sample ID	Description
SN1	A1	SZX24-0017626-0001.C001	Copper-colored metal wire with colorless transparent surface A1#
SN2	A2	SZX24-0017626-0001.C002	Silvery metal wire with red surface A2#
SN3	A3	SZX24-0017626-0001.C003	White material A3#
SN4	A4	SZX24-0017626-0001.C004	White material A4#
SN5	A5	SZX24-0017626-0001.C005	Dark grey core A5#
SN6	A6	SZX24-0017626-0001.C006	Silvery metal A6#

Remarks:

(1) 1 mg/kg = 1 ppm = 0.0001%
(2) MDL = Method Detection Limit
(3) ND = Not Detected (< MDL)
(4) "-" = Not Regulated

EU RoHS Directive (EU) 2015/863 amending Annex II to Directive 2011/65/EU - Lead, Mercury, Cadmium, Hexavalent chromium, Polybrominated biphenyls (PBB), Polybrominated diphenyl ethers (PBDE), Bis(2-ethylhexyl) phthalate (DEHP), Butyl benzyl phthalate (BBP), Dibutyl phthalate (DBP) and Diisobutyl phthalate (DIBP)

Test Method: With reference to IEC 62321-4:2013+AMD1:2017, IEC 62321-5:2013, IEC 62321-7-2:2017, IEC 62321-6:2015 and IEC 62321-8:2017, analysis was performed by ICP-OES/AAS, UV-Vis and GC-MS.

Test Item(s)	Limit	Unit(s)	MDL	A1	A2	A3
Lead (Pb)	1000	mg/kg	2	ND	ND	ND
Mercury (Hg)	1000	mg/kg	2	ND	ND	ND
Cadmium (Cd)	100	mg/kg	2	ND	ND	ND
Hexavalent Chromium (Cr(VI))	1000	mg/kg	8	ND	ND	ND
Polybromobiphenyl (PBB)	1000	mg/kg	-	ND	ND	ND
Monobrominated biphenyl (MonoBB)	-	mg/kg	5	ND	ND	ND
Dibrominated biphenyl (DiBB)	-	mg/kg	5	ND	ND	ND
Tribrominated biphenyl (TriBB)	-	mg/kg	5	ND	ND	ND
Tetrabrominated biphenyl (TetraBB)	-	mg/kg	5	ND	ND	ND
Pentabrominated biphenyl (PentaBB)	-	mg/kg	5	ND	ND	ND
Hexabrominated biphenyl (HexaBB)	-	mg/kg	5	ND	ND	ND
Heptabrominated biphenyl (HeptaBB)	-	mg/kg	5	ND	ND	ND
Octabrominated biphenyl (OctaBB)	-	mg/kg	5	ND	ND	ND
Nonabrominated biphenyl (NonaBB)	-	mg/kg	5	ND	ND	ND
Decabrominated biphenyl (DecaBB)	-	mg/kg	5	ND	ND	ND

SGS-CSTC Standards Technical Services Co., Ltd. Shenzhen Branch Testing Center Chemical Laboratory
检验检测专用章 Inspection & Testing Services

Unless otherwise agreed in writing, this document is issued by the Company subject to its General Conditions of Service printed overleaf, available on request or accessible at http://www.sgs.com/en/Terms-and-Conditions.aspx and, for electronic format documents, subject to Terms and Conditions for Electronic Documents at http://www.sgs.com/en/Terms-and-Conditions/Terms-e-Document.aspx. Attention is drawn to the limitation of liability, indemnification and jurisdiction issues defined therein. Any holder of this document is advised that information contained hereon reflects the Company's findings at the time of its intervention only and within the limits of Client's instructions, if any. The Company's sole responsibility is to its Client and this document does not exonerate parties to a transaction from exercising all their rights and obligations under the transaction documents. This document cannot be reproduced except in full, without prior written approval of the Company. Any unauthorized alteration, forgery or falsification of the content or appearance of this document is unlawful and offenders may be prosecuted to the fullest extent of the law. Unless otherwise stated the results shown in this test report refer only to the sample(s) tested .
Attention: To check the authenticity of testing /inspection report & certificate, please contact us at telephone: (86-755) 8307 1443, or email: CN.Doccheck@sgs.com
Room 101-901, Plant 4 & Room 101, Plant 2 & Room 101, Plant 3 & Room 301-501, Plant 3, Jianghao (Bantian) Industrial Plant Area, No. 430, Jihua Road, Bantian Community, Bantian Street, Longgang District, Shenzhen, Guangdong, China 518129 www.sgsgroup.com.cn
中国·广东·深圳市龙岗区坂田街道坂田社区吉华路430号江灏（坂田）工业厂区厂房4号101-901、2号101、3号101、3号301-501 邮编:518129 t (86-755) 25328888 sgs.china@sgs.com
Member of the SGS Group (SGS SA)

Test Item(s)	Limit	Unit(s)	MDL	A1	A2	A3
Polybromodiphenyl ether(PBDE)	1000	mg/kg	-	ND	ND	ND
Monobrominated diphenyl ether (MonoBDE)	-	mg/kg	5	ND	ND	ND
Dibrominated diphenyl ether (DiBDE)	-	mg/kg	5	ND	ND	ND
Tribrominated diphenyl ether (TriBDE)	-	mg/kg	5	ND	ND	ND
Tetrabrominated diphenyl ether (TetraBDE)	-	mg/kg	5	ND	ND	ND
Pentabrominated diphenyl ether (PentaBDE)	-	mg/kg	5	ND	ND	ND
Hexabrominated diphenyl ether (HexaBDE)	-	mg/kg	5	ND	ND	ND
Heptabrominated diphenyl ether (HeptaBDE)	-	mg/kg	5	ND	ND	ND
Octabrominated diphenyl ether (OctaBDE)	-	mg/kg	5	ND	ND	ND
Nonabrominated diphenyl ether (NonaBDE)	-	mg/kg	5	ND	ND	ND
Decabrominated diphenyl ether (DecaBDE)	-	mg/kg	5	ND	ND	ND
Bis-(2-ethylhexyl) Phthalate(DEHP)	1000	mg/kg	50	ND	ND	ND
Benzyl Butyl Phthalate(BBP)	1000	mg/kg	50	ND	ND	ND
Dibutyl Phthalate(DBP)	1000	mg/kg	50	ND	ND	ND
Diisobutyl Phthalate(DIBP)	1000	mg/kg	50	ND	ND	ND

Test Item(s)	Limit	Unit(s)	MDL	A4	A5
Lead (Pb)	1000	mg/kg	2	ND	ND
Mercury (Hg)	1000	mg/kg	2	ND	ND
Cadmium (Cd)	100	mg/kg	2	ND	ND
Hexavalent Chromium (Cr(VI))	1000	mg/kg	8	ND	ND
Polybromobiphenyl (PBB)	1000	mg/kg	-	ND	ND
Monobrominated biphenyl (MonoBB)	-	mg/kg	5	ND	ND
Dibrominated biphenyl (DiBB)	-	mg/kg	5	ND	ND
Tribrominated biphenyl (TriBB)	-	mg/kg	5	ND	ND
Tetrabrominated biphenyl (TetraBB)	-	mg/kg	5	ND	ND
Pentabrominated biphenyl (PentaBB)	-	mg/kg	5	ND	ND
Hexabrominated biphenyl (HexaBB)	-	mg/kg	5	ND	ND
Heptabrominated biphenyl (HeptaBB)	-	mg/kg	5	ND	ND
Octabrominated biphenyl (OctaBB)	-	mg/kg	5	ND	ND
Nonabrominated biphenyl (NonaBB)	-	mg/kg	5	ND	ND

SGS-CSTC Standards Technical Services Co., Ltd. Shenzhen Branch Testing Center Chemical Laboratory
检验检测专用章 Inspection & Testing Services

Unless otherwise agreed in writing, this document is issued by the Company subject to its General Conditions of Service printed overleaf, available on request or accessible at http://www.sgs.com/en/Terms-and-Conditions.aspx and, for electronic format documents, subject to Terms and Conditions for Electronic Documents at http://www.sgs.com/en/Terms-and-Conditions/Terms-e-Document.aspx. Attention is drawn to the limitation of liability, indemnification and jurisdiction issues defined therein. Any holder of this document is advised that information contained hereon reflects the Company's findings at the time of its intervention only and within the limits of Client's instructions, if any. The Company's sole responsibility is to its Client and this document does not exonerate parties to a transaction from exercising all their rights and obligations under the transaction documents. This document cannot be reproduced except in full, without prior written approval of the Company. Any unauthorized alteration, forgery or falsification of the content or appearance of this document is unlawful and offenders may be prosecuted to the fullest extent of the law. Unless otherwise stated the results shown in this test report refer only to the sample(s) tested .
Attention: To check the authenticity of testing /inspection report & certificate, please contact us at telephone: (86-755) 8307 1443, or email: CN.Doccheck@sgs.com
Room 101-901, Plant 4 & Room 101, Plant 2 & Room 101, Plant 3 & Room 301-501, Plant 3, Jianghao (Bantian) Industrial Plant Area, No. 430, Jihua Road, Bantian Community, Bantian Street, Longgang District, Shenzhen, Guangdong, China 518129 www.sgsgroup.com.cn
中国·广东·深圳市龙岗区坂田街道坂田社区吉华路430号江豪（坂田）工业厂区厂房4号101-901、2号101、3号101、3号301-501 邮编:518129 t (86-755) 25328888 sgs.china@sgs.com
Member of the SGS Group (SGS SA)

Test Item(s)	Limit	Unit(s)	MDL	A4	A5
Decabrominated biphenyl (DecaBB)	-	mg/kg	5	ND	ND
Polybromodiphenyl ether(PBDE)	1000	mg/kg	-	ND	ND
Monobrominated diphenyl ether (MonoBDE)	-	mg/kg	5	ND	ND
Dibrominated diphenyl ether (DiBDE)	-	mg/kg	5	ND	ND
Tribrominated diphenyl ether (TriBDE)	-	mg/kg	5	ND	ND
Tetrabrominated diphenyl ether (TetraBDE)	-	mg/kg	5	ND	ND
Pentabrominated diphenyl ether (PentaBDE)	-	mg/kg	5	ND	ND
Hexabrominated diphenyl ether (HexaBDE)	-	mg/kg	5	ND	ND
Heptabrominated diphenyl ether (HeptaBDE)	-	mg/kg	5	ND	ND
Octabrominated diphenyl ether (OctaBDE)	-	mg/kg	5	ND	ND
Nonabrominated diphenyl ether (NonaBDE)	-	mg/kg	5	ND	ND
Decabrominated diphenyl ether (DecaBDE)	-	mg/kg	5	ND	ND
Bis-(2-ethylhexyl) Phthalate(DEHP)	1000	mg/kg	50	ND	ND
Benzyl Butyl Phthalate(BBP)	1000	mg/kg	50	ND	ND
Dibutyl Phthalate(DBP)	1000	mg/kg	50	ND	ND
Diisobutyl Phthalate(DIBP)	1000	mg/kg	50	ND	ND

Notes:
(1) The maximum permissible limit is quoted from RoHS Directive (EU) 2015/863.
(2) IEC 62321 series is equivalent to EN 62321 series.
(3) The restriction of DEHP, BBP, DBP and DIBP shall apply to medical devices, including in vitro medical devices, and monitoring and control instruments, including industrial monitoring and control instruments, from 22 July 2021.

Test Method: With reference to IEC 62321-4:2013+AMD1:2017, IEC 62321-5:2013, IEC 62321-7-1:2015, IEC 62321-6:2015 and IEC62321-8:2017, analysis was performed by ICP-OES/AAS, UV-Vis and GC-MS.

Test Item(s)	Limit	Unit(s)	MDL	A6
Lead (Pb)	1000	mg/kg	2	52
Mercury (Hg)	1000	mg/kg	2	ND
Cadmium (Cd)	100	mg/kg	2	ND
Hexavalent Chromium (Cr(VI))▼	-	μg/cm²	0.10	ND
Polybromobiphenyl (PBB)	1000	mg/kg	-	ND
Monobrominated biphenyl (MonoBB)	-	mg/kg	5	ND
Dibrominated biphenyl (DiBB)	-	mg/kg	5	ND
Tribrominated biphenyl (TriBB)	-	mg/kg	5	ND

SGS-CSTC Standards Technical Services Co., Ltd. Shenzhen Branch Testing Center Chemical Laboratory
检验检测专用章 Inspection & Testing Services

Unless otherwise agreed in writing, this document is issued by the Company subject to its General Conditions of Service printed overleaf, available on request or accessible at http://www.sgs.com/en/Terms-and-Conditions.aspx and, for electronic format documents, subject to Terms and Conditions for Electronic Documents at http://www.sgs.com/en/Terms-and-Conditions/Terms-e-Document.aspx. Attention is drawn to the limitation of liability, indemnification and jurisdiction issues defined therein. Any holder of this document is advised that information contained hereon reflects the Company's findings at the time of its intervention only and within the limits of Client's instructions, if any. The Company's sole responsibility is to its Client and this document does not exonerate parties to a transaction from exercising all their rights and obligations under the transaction documents. This document cannot be reproduced except in full, without prior written approval of the Company. Any unauthorized alteration, forgery or falsification of the content or appearance of this document is unlawful and offenders may be prosecuted to the fullest extent of the law. Unless otherwise stated the results shown in this test report refer only to the sample(s) tested .
Attention: To check the authenticity of testing /inspection report & certificate, please contact us at telephone: (86-755) 8307 1443, or email: CN.Doccheck@sgs.com
Room 101-901, Plant 4 & Room 101, Plant 2 & Room 101, Plant 3 & Room 301-501, Plant 3, Jianghao (Bantian) Industrial Plant Area, No. 430, Jihua Road, Bantian Community, Bantian Street, Longgang District, Shenzhen, Guangdong, China 518129 www.sgsgroup.com.cn
中国·广东·深圳市龙岗区坂田街道坂田社区吉华路430号江灏（坂田）工业厂区厂房4号101-901、2号101、3号101、3号301-501 邮编:518129 t (86-755) 25328888 sgs.china@sgs.com
Member of the SGS Group (SGS SA)

Test Item(s)	Limit	Unit(s)	MDL	A6
Tetrabrominated biphenyl (TetraBB)	-	mg/kg	5	ND
Pentabrominated biphenyl (PentaBB)	-	mg/kg	5	ND
Hexabrominated biphenyl (HexaBB)	-	mg/kg	5	ND
Heptabrominated biphenyl (HeptaBB)	-	mg/kg	5	ND
Octabrominated biphenyl (OctaBB)	-	mg/kg	5	ND
Nonabrominated biphenyl (NonaBB)	-	mg/kg	5	ND
Decabrominated biphenyl (DecaBB)	-	mg/kg	5	ND
Polybromodiphenyl ether(PBDE)	1000	mg/kg	-	ND
Monobrominated diphenyl ether (MonoBDE)	-	mg/kg	5	ND
Dibrominated diphenyl ether (DiBDE)	-	mg/kg	5	ND
Tribrominated diphenyl ether (TriBDE)	-	mg/kg	5	ND
Tetrabrominated diphenyl ether (TetraBDE)	-	mg/kg	5	ND
Pentabrominated diphenyl ether (PentaBDE)	-	mg/kg	5	ND
Hexabrominated diphenyl ether (HexaBDE)	-	mg/kg	5	ND
Heptabrominated diphenyl ether (HeptaBDE)	-	mg/kg	5	ND
Octabrominated diphenyl ether (OctaBDE)	-	mg/kg	5	ND
Nonabrominated diphenyl ether (NonaBDE)	-	mg/kg	5	ND
Decabrominated diphenyl ether (DecaBDE)	-	mg/kg	5	ND
Bis-(2-ethylhexyl) Phthalate(DEHP)	1000	mg/kg	50	ND
Benzyl Butyl Phthalate(BBP)	1000	mg/kg	50	ND
Dibutyl Phthalate(DBP)	1000	mg/kg	50	ND
Diisobutyl Phthalate(DIBP)	1000	mg/kg	50	ND

Notes:
(1) The maximum permissible limit is quoted from RoHS Directive (EU) 2015/863.
(2) IEC 62321 series is equivalent to EN 62321 series.
(3) ▼ =
a. The sample is positive for Cr(VI) if the Cr(VI)concentration is greater than 0.13 μg/cm^2. The sample coating is considered to contain Cr(VI).
b. The sample is negative for Cr(VI) if Cr(VI) is ND (concentration less than 0.10 μg/cm^2). The coating is considered a non-Cr(VI) based coating.
c. The result between 0.10 μg/cm^2 and 0.13 μg/cm^2 is considered to be inconclusive-unavoidable coating variations may influence the determination.

Information on storage conditions and production date of the tested sample is unavailable and thus Cr(VI) results represent status of the sample at the time of testing.

Unless otherwise stated, the decision rule for conformity reporting is based on Binary Statement for Simple Acceptance Rule (*w*=0) stated in ILAC-G8:09/2019.

SGS-CSTC Standards Technical Services Co., Ltd. Shenzhen Branch Testing Center Chemical Laboratory
检验检测专用章 Inspection & Testing Services
Unless otherwise agreed in writing, this document is issued by the Company subject to its General Conditions of Service printed overleaf, available on request or accessible at http://www.sgs.com/en/Terms-and-Conditions.aspx and, for electronic format documents, subject to Terms and Conditions for Electronic Documents at http://www.sgs.com/en/Terms-and-Conditions/Terms-e-Document.aspx. Attention is drawn to the limitation of liability, indemnification and jurisdiction issues defined therein. Any holder of this document is advised that information contained hereon reflects the Company's findings at the time of its intervention only and within the limits of Client's instructions, if any. The Company's sole responsibility is to its Client and this document does not exonerate parties to a transaction from exercising all their rights and obligations under the transaction documents. This document cannot be reproduced except in full, without prior written approval of the Company. Any unauthorized alteration, forgery or falsification of the content or appearance of this document is unlawful and offenders may be prosecuted to the fullest extent of the law. Unless otherwise stated the results shown in this test report refer only to the sample(s) tested .
Attention: To check the authenticity of testing /inspection report & certificate, please contact us at telephone: (86-755) 8307 1443, or email: CN.Doccheck@sgs.com
Room 101-901, Plant 4 & Room 101, Plant 2 & Room 101, Plant 3 & Room 301-501, Plant 3, Jianghao (Bantian) Industrial Plant Area, No. 430, Jihua Road, Bantian Community, Bantian Street, Longgang District, Shenzhen, Guangdong, China 518129 www.sgsgroup.com.cn
中国·广东·深圳市龙岗区坂田街道坂田社区吉华路430号江灏（坂田）工业厂区厂房4号101-901、2号101、3号101、3号301-501 邮编:518129 t (86-755) 25328888 sgs.china@sgs.com
Member of the SGS Group (SGS SA)

Elements Testing Flow Chart

These samples were dissolved totally by pre-conditioning method according to below flow chart.

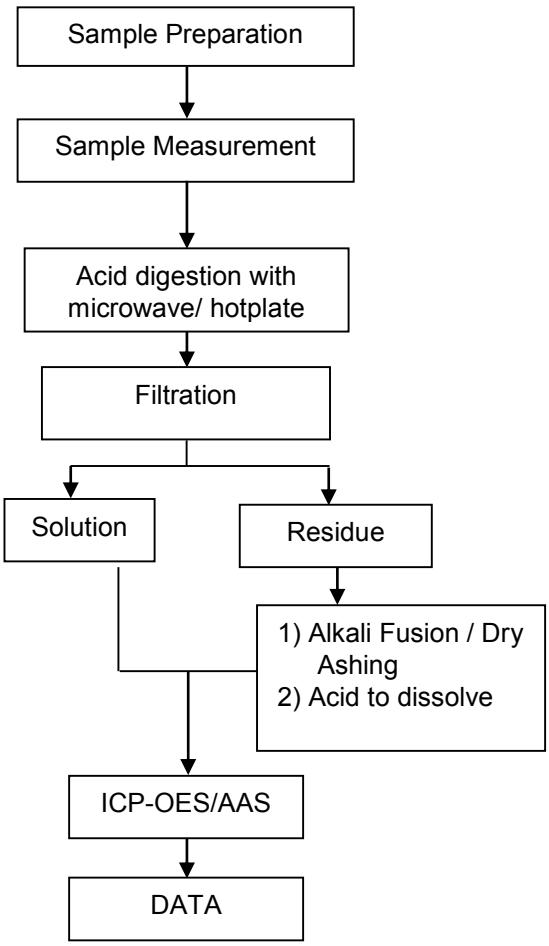

Unless otherwise agreed in writing, this document is issued by the Company subject to its General Conditions of Service printed overleaf, available on request or accessible at http://www.sgs.com/en/Terms-and-Conditions.aspx and, for electronic format documents, subject to Terms and Conditions for Electronic Documents at http://www.sgs.com/en/Terms-and-Conditions/Terms-e-Document.aspx. Attention is drawn to the limitation of liability, indemnification and jurisdiction issues defined therein. Any holder of this document is advised that information contained hereon reflects the Company's findings at the time of its intervention only and within the limits of Client's instructions, if any. The Company's sole responsibility is to its Client and this document does not exonerate parties to a transaction from exercising all their rights and obligations under the transaction documents. This document cannot be reproduced except in full, without prior written approval of the Company. Any unauthorized alteration, forgery or falsification of the content or appearance of this document is unlawful and offenders may be prosecuted to the fullest extent of the law. Unless otherwise stated the results shown in this test report refer only to the sample(s) tested .
Attention: To check the authenticity of testing /inspection report & certificate, please contact us at telephone: (86-755) 8307 1443, or email: CN.Doccheck@sgs.com
SGS-CSTC Standards Technical Services Co., Ltd. Shenzhen Branch Testing Center Chemical Laboratory
Room 101-901, Plant 4 & Room 101, Plant 2 & Room 101, Plant 3 & Room 301-501, Plant 3, Jianghao (Bantian) Industrial Plant Area, No. 430, Jihua Road, Bantian Community, Bantian Street, Longgang District, Shenzhen, Guangdong, China 518129 www.sgsgroup.com.cn
中国·广东·深圳市龙岗区坂田街道坂田社区吉华路430号江灏（坂田）工业厂区厂房4号101-901、2号101、3号101、3号301-501 邮编:518129 t (86-755) 25328888 sgs.china@sgs.com
Member of the SGS Group (SGS SA)

ATTACHMENTS

Hexavalent Chromium (Cr(VI)) Testing Flow Chart

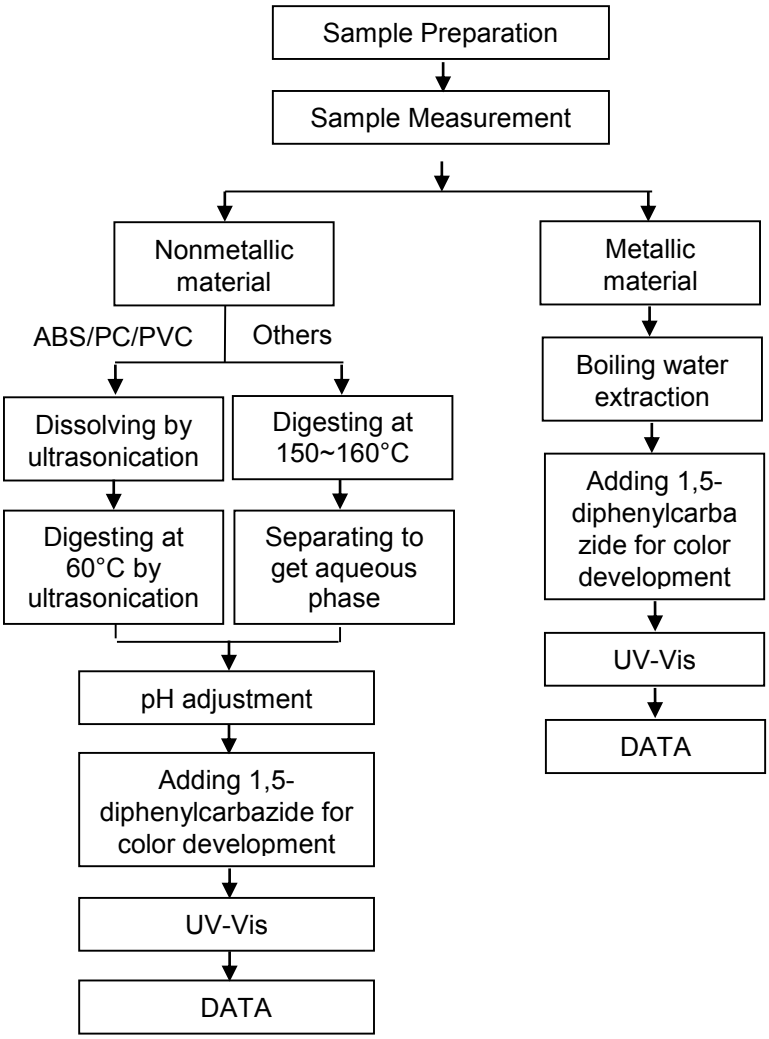

Unless otherwise agreed in writing, this document is issued by the Company subject to its General Conditions of Service printed overleaf, available on request or accessible at http://www.sgs.com/en/Terms-and-Conditions.aspx and, for electronic format documents, subject to Terms and Conditions for Electronic Documents at http://www.sgs.com/en/Terms-and-Conditions/Terms-e-Document.aspx. Attention is drawn to the limitation of liability, indemnification and jurisdiction issues defined therein. Any holder of this document is advised that information contained hereon reflects the Company's findings at the time of its intervention only and within the limits of Client's instructions, if any. The Company's sole responsibility is to its Client and this document does not exonerate parties to a transaction from exercising all their rights and obligations under the transaction documents. This document cannot be reproduced except in full, without prior written approval of the Company. Any unauthorized alteration, forgery or falsification of the content or appearance of this document is unlawful and offenders may be prosecuted to the fullest extent of the law. Unless otherwise stated the results shown in this test report refer only to the sample(s) tested .
Attention: To check the authenticity of testing /inspection report & certificate, please contact us at telephone: (86-755) 8307 1443, or email: CN.Doccheck@sgs.com
SGS-CSTC Standards Technical Services Co., Ltd. Shenzhen Branch Testing Center Chemical Laboratory
Room 101-901, Plant 4 & Room 101, Plant 2 & Room 101, Plant 3 & Room 301-501, Plant 3, Jianghao (Bantian) Industrial Plant Area, No. 430, Jihua Road, Bantian Community, Bantian Street, Longgang District, Shenzhen, Guangdong, China 518129 www.sgsgroup.com.cn
中国·广东·深圳市龙岗区坂田街道坂田社区吉华路430号江灏（坂田）工业厂区厂房4号101-901、2号101、3号101、3号301-501 邮编:518129 t (86-755) 25328888 sgs.china@sgs.com
Member of the SGS Group (SGS SA)

PBB/PBDE Testing Flow Chart

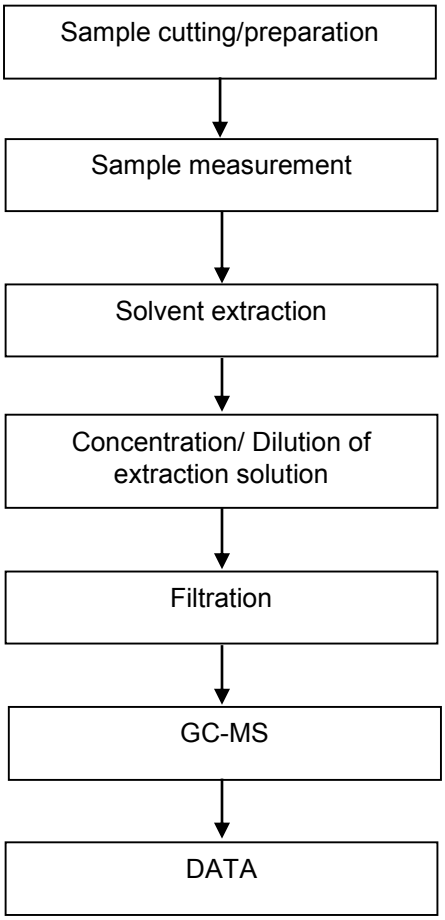

Unless otherwise agreed in writing, this document is issued by the Company subject to its General Conditions of Service printed overleaf, available on request or accessible at http://www.sgs.com/en/Terms-and-Conditions.aspx and, for electronic format documents, subject to Terms and Conditions for Electronic Documents at http://www.sgs.com/en/Terms-and-Conditions/Terms-e-Document.aspx. Attention is drawn to the limitation of liability, indemnification and jurisdiction issues defined therein. Any holder of this document is advised that information contained hereon reflects the Company's findings at the time of its intervention only and within the limits of Client's instructions, if any. The Company's sole responsibility is to its Client and this document does not exonerate parties to a transaction from exercising all their rights and obligations under the transaction documents. This document cannot be reproduced except in full, without prior written approval of the Company. Any unauthorized alteration, forgery or falsification of the content or appearance of this document is unlawful and offenders may be prosecuted to the fullest extent of the law. Unless otherwise stated the results shown in this test report refer only to the sample(s) tested .
Attention: To check the authenticity of testing /inspection report & certificate, please contact us at telephone: (86-755) 8307 1443, or email: CN.Doccheck@sgs.com
SGS-CSTC Standards Technical Services Co., Ltd. Shenzhen Branch Testing Center Chemical Laboratory
Room 101-901, Plant 4 & Room 101, Plant 2 & Room 101, Plant 3 & Room 301-501, Plant 3, Jianghao (Bantian) Industrial Plant Area, No. 430, Jihua Road, Bantian Community, Bantian Street, Longgang District, Shenzhen, Guangdong, China 518129 www.sgsgroup.com.cn
中国·广东·深圳市龙岗区坂田街道坂田社区吉华路430号江灏（坂田）工业厂区厂房4号101-901、2号101、3号101、3号301-501 邮编:518129 t (86-755) 25328888 sgs.china@sgs.com
Member of the SGS Group (SGS SA)

Phthalates Testing Flow Chart

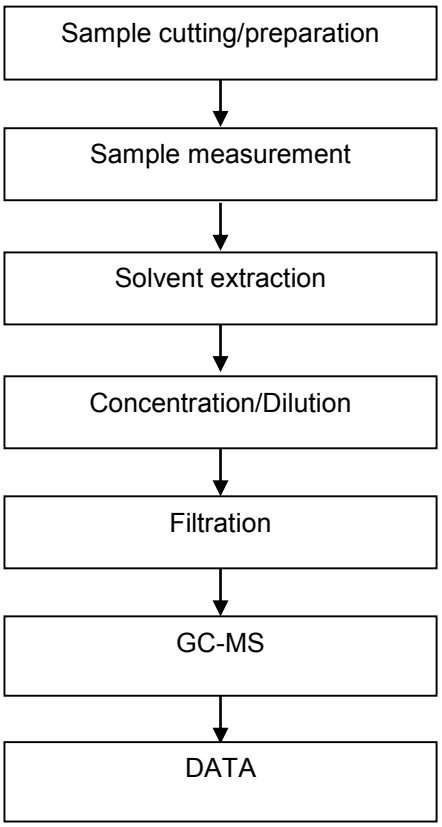

Unless otherwise agreed in writing, this document is issued by the Company subject to its General Conditions of Service printed overleaf, available on request or accessible at http://www.sgs.com/en/Terms-and-Conditions.aspx and, for electronic format documents, subject to Terms and Conditions for Electronic Documents at http://www.sgs.com/en/Terms-and-Conditions/Terms-e-Document.aspx. Attention is drawn to the limitation of liability, indemnification and jurisdiction issues defined therein. Any holder of this document is advised that information contained hereon reflects the Company's findings at the time of its intervention only and within the limits of Client's instructions, if any. The Company's sole responsibility is to its Client and this document does not exonerate parties to a transaction from exercising all their rights and obligations under the transaction documents. This document cannot be reproduced except in full, without prior written approval of the Company. Any unauthorized alteration, forgery or falsification of the content or appearance of this document is unlawful and offenders may be prosecuted to the fullest extent of the law. Unless otherwise stated the results shown in this test report refer only to the sample(s) tested .
Attention: To check the authenticity of testing /inspection report & certificate, please contact us at telephone: (86-755) 8307 1443, or email: CN.Doccheck@sgs.com
SGS-CSTC Standards Technical Services Co., Ltd. Shenzhen Branch Testing Center Chemical Laboratory
Room 101-901, Plant 4 & Room 101, Plant 2 & Room 101, Plant 3 & Room 301-501, Plant 3, Jianghao (Bantian) Industrial Plant Area, No. 430, Jihua Road, Bantian Community, Bantian Street, Longgang District, Shenzhen, Guangdong, China 518129 www.sgsgroup.com.cn
中国·广东·深圳市龙岗区坂田街道坂田社区吉华路430号江灏（坂田）工业厂区厂房4号101-901、2号101、3号101、3号301-501 邮编:518129 t (86-755) 25328888 sgs.china@sgs.com
Member of the SGS Group (SGS SA)

Sample Photo:

SZX24-0017626-0001.C001

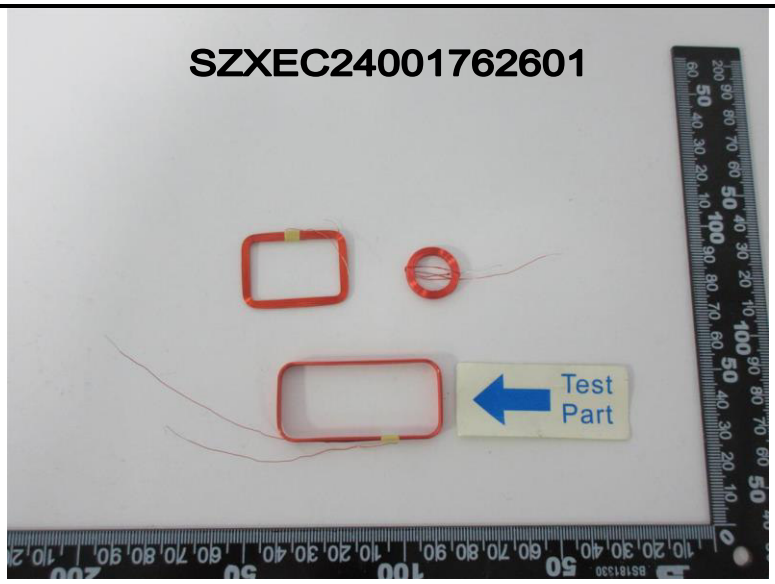

SZX24-0017626-0001.C002

Unless otherwise agreed in writing, this document is issued by the Company subject to its General Conditions of Service printed overleaf, available on request or accessible at http://www.sgs.com/en/Terms-and-Conditions.aspx and, for electronic format documents, subject to Terms and Conditions for Electronic Documents at http://www.sgs.com/en/Terms-and-Conditions/Terms-e-Document.aspx. Attention is drawn to the limitation of liability, indemnification and jurisdiction issues defined therein. Any holder of this document is advised that information contained hereon reflects the Company's findings at the time of its intervention only and within the limits of Client's instructions, if any. The Company's sole responsibility is to its Client and this document does not exonerate parties to a transaction from exercising all their rights and obligations under the transaction documents. This document cannot be reproduced except in full, without prior written approval of the Company. Any unauthorized alteration, forgery or falsification of the content or appearance of this document is unlawful and offenders may be prosecuted to the fullest extent of the law. Unless otherwise stated the results shown in this test report refer only to the sample(s) tested .

Attention: To check the authenticity of testing /inspection report & certificate, please contact us at telephone: (86-755) 8307 1443, or email: CN.Doccheck@sgs.com

SGS-CSTC Standards Technical Services Co., Ltd. Shenzhen Branch Testing Center Chemical Laboratory

Room 101-901, Plant 4 & Room 101, Plant 2 & Room 101, Plant 3 & Room 301-501, Plant 3, Jianghao (Bantian) Industrial Plant Area, No. 430, Jihua Road, Bantian Community, Bantian Street, Longgang District, Shenzhen, Guangdong, China 518129 www.sgsgroup.com.cn

中国·广东·深圳市龙岗区坂田街道坂田社区吉华路430号江灏（坂田）工业厂区厂房4号101-901、2号101、3号101、3号301-501 邮编:518129 t (86-755) 25328888 sgs.china@sgs.com

Member of the SGS Group (SGS SA)

SZX24-0017626-0001.C003

SZX24-0017626-0001.C004

Unless otherwise agreed in writing, this document is issued by the Company subject to its General Conditions of Service printed overleaf, available on request or accessible at http://www.sgs.com/en/Terms-and-Conditions.aspx and, for electronic format documents, subject to Terms and Conditions for Electronic Documents at http://www.sgs.com/en/Terms-and-Conditions/Terms-e-Document.aspx. Attention is drawn to the limitation of liability, indemnification and jurisdiction issues defined therein. Any holder of this document is advised that information contained hereon reflects the Company's findings at the time of its intervention only and within the limits of Client's instructions, if any. The Company's sole responsibility is to its Client and this document does not exonerate parties to a transaction from exercising all their rights and obligations under the transaction documents. This document cannot be reproduced except in full, without prior written approval of the Company. Any unauthorized alteration, forgery or falsification of the content or appearance of this document is unlawful and offenders may be prosecuted to the fullest extent of the law. Unless otherwise stated the results shown in this test report refer only to the sample(s) tested .

Attention: To check the authenticity of testing /inspection report & certificate, please contact us at telephone: (86-755) 8307 1443, or email: CN.Doccheck@sgs.com

SGS-CSTC Standards Technical Services Co., Ltd. Shenzhen Branch Testing Center Chemical Laboratory

Room 101-901, Plant 4 & Room 101, Plant 2 & Room 101, Plant 3 & Room 301-501, Plant 3, Jianghao (Bantian) Industrial Plant Area, No. 430, Jihua Road, Bantian Community, Bantian Street, Longgang District, Shenzhen, Guangdong, China 518129 www.sgsgroup.com.cn

中国·广东·深圳市龙岗区坂田街道坂田社区吉华路430号江灏（坂田）工业厂区厂房4号101-901、2号101、3号101、3号301-501 邮编:518129 t (86-755) 25328888 sgs.china@sgs.com

Member of the SGS Group (SGS SA)

SZX24-0017626-0001.C005

SZX24-0017626-0001.C006

SGS authenticate the photo on original report only

*** End of Report ***

Unless otherwise agreed in writing, this document is issued by the Company subject to its General Conditions of Service printed overleaf, available on request or accessible at http://www.sgs.com/en/Terms-and-Conditions.aspx and, for electronic format documents, subject to Terms and Conditions for Electronic Documents at http://www.sgs.com/en/Terms-and-Conditions/Terms-e-Document.aspx. Attention is drawn to the limitation of liability, indemnification and jurisdiction issues defined therein. Any holder of this document is advised that information contained hereon reflects the Company's findings at the time of its intervention only and within the limits of Client's instructions, if any. The Company's sole responsibility is to its Client and this document does not exonerate parties to a transaction from exercising all their rights and obligations under the transaction documents. This document cannot be reproduced except in full, without prior written approval of the Company. Any unauthorized alteration, forgery or falsification of the content or appearance of this document is unlawful and offenders may be prosecuted to the fullest extent of the law. Unless otherwise stated the results shown in this test report refer only to the sample(s) tested .

Attention: To check the authenticity of testing /inspection report & certificate, please contact us at telephone: (86-755) 8307 1443, or email: CN.Doccheck@sgs.com

SGS-CSTC Standards Technical Services Co., Ltd. Shenzhen Branch Testing Center Chemical Laboratory

Room 101-901, Plant 4 & Room 101, Plant 2 & Room 101, Plant 3 & Room 301-501, Plant 3, Jianghao (Bantian) Industrial Plant Area, No. 430, Jihua Road, Bantian Community, Bantian Street, Longgang District, Shenzhen, Guangdong, China 518129 www.sgsgroup.com.cn

中国·广东·深圳市龙岗区坂田街道坂田社区吉华路430号江灏（坂田）工业厂区厂房4号101-901、2号101、3号101、3号301-501 邮编:518129 t (86-755) 25328888 sgs.china@sgs.com

Member of the SGS Group (SGS SA)

Test Report (SVHC)

No.: SZXEC24001762605 **Date:** Jun 25, 2024

Client Name: DONGGUAN FINE ELECTRONICS LIMITED

Client Address: 194 KEJI EAST ROAD, SHIJIE TOWN, DONGGUAN CITY, GUANGDONG PROVINCE

Sample Name: Coil

The above sample(s) and information were provided by the client.

SGS Job No.: SZP24-024492

Sample Receiving Date: Jun 04, 2024

Testing Period: Jun 04, 2024 ~ Jun 12, 2024

Test Requested: As requested by client, SVHC screening is performed according to:
(i) Two hundred and forty (240) substances in the Candidate List of Substances of Very High Concern (SVHC) for authorization published by European Chemicals Agency (ECHA) on and before Jan 23, 2024 regarding Regulation (EC) No 1907/2006 concerning the REACH.
(ii) Two (2) substances in the Public Consultation List of potential Substances of Very High Concern (SVHC) published by European Chemicals Agency (ECHA) on and before Mar 1, 2024 regarding Regulation (EC) No 1907/2006 concerning the REACH.
(iii) One (1) potential Substances of Very High Concern (SVHC) in the notification of WTO on Jun 1, 2021.
(iv) Six (6) potential Substances of Very High Concern (SVHC) in the Intention List published by European Chemicals Agency (ECHA) regarding Regulation (EC) No 1907/2006 concerning the REACH.

Test Method(s): Please refer to next page(s).

Test Result(s): Please refer to next page(s).

Summary:

According to the specified scope and evaluation screening, the test results of SVHC are ≤ 0.1% (w/w) in the submitted sample.	Pass

Signed for and on behalf of
SGS-CSTC Standards Technical Services Co., Ltd. Shenzhen Branch

Tina

Tina Fan
Approved Signatory

scan to see the report
21174926

Unless otherwise agreed in writing, this document is issued by the Company subject to its General Conditions of Service printed overleaf, available on request or accessible at http://www.sgs.com/en/Terms-and-Conditions.aspx and, for electronic format documents, subject to Terms and Conditions for Electronic Documents at http://www.sgs.com/en/Terms-and-Conditions/Terms-e-Document.aspx. Attention is drawn to the limitation of liability, indemnification and jurisdiction issues defined therein. Any holder of this document is advised that information contained hereon reflects the Company's findings at the time of its intervention only and within the limits of Client's instructions, if any. The Company's sole responsibility is to its Client and this document does not exonerate parties to a transaction from exercising all their rights and obligations under the transaction documents. This document cannot be reproduced except in full, without prior written approval of the Company. Any unauthorized alteration, forgery or falsification of the content or appearance of this document is unlawful and offenders may be prosecuted to the fullest extent of the law. Unless otherwise stated the results shown in this test report refer only to the sample(s) tested .
Attention: To check the authenticity of testing /inspection report & certificate, please contact us at telephone: (86-755) 8307 1443, or email: CN.Doccheck@sgs.com
Room 101-901, Plant 4 & Room 101, Plant 2 & Room 101, Plant 3 & Room 301-501, Plant 3, Jianghao (Bantian) Industrial Plant Area, No. 430, Jihua Road, Bantian Community, Bantian Street, Longgang District, Shenzhen, Guangdong, China 518129 www.sgsgroup.com.cn
中国·广东·深圳市龙岗区坂田街道坂田社区吉华路430号江灏（坂田）工业厂区厂房4号101-901、2号101、3号101、3号301-501 邮编:518129 t (86-755) 25328888 sgs.china@sgs.com
Member of the SGS Group (SGS SA)

Remark :

1. The chemical analysis of specified SVHC is performed by means of currently available analytical techniques against the following SVHC related documents published by ECHA:
   http://echa.europa.eu/web/guest/candidate-list-table
   These lists are under evaluation by ECHA and may subject to change in the future.
2. REACH obligation:

   2.1 Concerning article(s):
   Communication:
   Article 33 of Regulation (EC) No 1907/2006 requires supplier of an article containing a substance meeting the criteria in Article 57 and identified in accordance with Article 59(1) in a concentration above 0.1% weight by weight (w/w) shall provide the recipient of the article with sufficient information, available to the supplier, to allow safe use of the article including, as a minimum, the name of that substance in the Candidate List.

   Notification:
   In accordance with Regulation (EC) No 1907/2006, any EU producer or importer of articles shall notify ECHA, in accordance with paragraph 4 of Article 7, if a substance meets the criteria in Article 57 and is identified in accordance with Article 59(1) of the Regulation, if (a) the substance in the Candidate List is present in those articles in quantities totaling over one tonne per producer or importer per year; and (b) the substance in the Candidate List is present in those articles above a concentration of 0.1% weight by weight (w/w).

   Companies supplying articles containing substances of very high concern (SVHCs) on the Candidate List in a concentration above 0.1% weight by weight (w/w) on the EU market must comply with the Waste Framework Directive 2008/98/EC requirement and submit SCIP notifications on these articles to ECHA, as from 5 January 2021.

   2.2 Concerning material(s):
   Test results in this report are based on the tested sample. This report refers to testing result of tested sample submitted as homogenous material(s). In case such material is being used to compose an article, the results indicated in this report may not represent SVHC concentration in such article. If this report refers to testing result of composite material group by equal weight proportion, the material in each composite test group may come from more than one article.

   If the sample is a substance or mixture, and it directly exports to EU, client has the obligation to comply with the supply chain communication obligation under Article 31 of Regulation (EC) No. 1907/2006 and the conditions of Authorization of substance of very high concern included in the Annex XIV of the Regulation (EC) No. 1907/2006.

   2.3 Concerning substance and preparation:
   If a SVHC is found over 0.1% (w/w) and/or the specific concentration limit which is set in Regulation (EC) No 1272/2008 and its amendments, client is suggested to prepare a Safety Data Sheet (SDS) against the SVHC to comply with the supply chain communication obligation under Regulation (EC) No 1907/2006, in which:
   - a substance that is classified as hazardous under the CLP Regulation (EC) No 1272/2008.
   - a mixture that is classified as hazardous under the CLP Regulation (EC) No 1272/2008, when it contains a substance with concentration equal to, or greater than the classification limit as set in Regulation (EC) No. 1272/2008; or
   - a mixture is not classified as hazardous under the CLP Regulation (EC) No 1272/2008, but contains either:

SGS-CSTC Standards Technical Services Co., Ltd. Shenzhen Branch Testing Center Chemical Laboratory
检验检测专用章 Inspection & Testing Services

Unless otherwise agreed in writing, this document is issued by the Company subject to its General Conditions of Service printed overleaf, available on request or accessible at http://www.sgs.com/en/Terms-and-Conditions.aspx and, for electronic format documents, subject to Terms and Conditions for Electronic Documents at http://www.sgs.com/en/Terms-and-Conditions/Terms-e-Document.aspx. Attention is drawn to the limitation of liability, indemnification and jurisdiction issues defined therein. Any holder of this document is advised that information contained hereon reflects the Company's findings at the time of its intervention only and within the limits of Client's instructions, if any. The Company's sole responsibility is to its Client and this document does not exonerate parties to a transaction from exercising all their rights and obligations under the transaction documents. This document cannot be reproduced except in full, without prior written approval of the Company. Any unauthorized alteration, forgery or falsification of the content or appearance of this document is unlawful and offenders may be prosecuted to the fullest extent of the law. Unless otherwise stated the results shown in this test report refer only to the sample(s) tested .
Attention: To check the authenticity of testing /inspection report & certificate, please contact us at telephone: (86-755) 8307 1443, or email: CN.Doccheck@sgs.com
Room 101-901, Plant 4 & Room 101, Plant 2 & Room 101, Plant 3 & Room 301-501, Plant 3, Jianghao (Bantian) Industrial Plant Area, No. 430, Jihua Road, Bantian Community, Bantian Street, Longgang District, Shenzhen, Guangdong, China 518129 www.sgsgroup.com.cn
中国·广东·深圳市龙岗区坂田街道坂田社区吉华路430号江灏（坂田）工业厂区厂房4号101-901、2号101、3号101、3号301-501 邮编:518129 t (86-755) 25328888 sgs.china@sgs.com
Member of the SGS Group (SGS SA)

(a) a substance posing human health or environmental hazards in an individual concentration of ≥ 1 % by weight for mixtures that are solid or liquids (i.e., non-gaseous mixtures) or ≥ 0.2 % by volume for gaseous mixtures; or
(b) a substance that is PBT, or vPvB in an individual concentration of ≥ 0.1 % by weight for mixtures that are solid or liquids (i.e., non-gaseous mixtures); or
(c) a substance on the SVHC candidate list (for reasons other than those listed above), in an individual concentration of ≥ 0.1 % by weight for non-gaseous mixtures; or
(d) a substance for which there are Europe-wide workplace exposure limits

3. If a SVHC is found over the reporting limit, client is suggested to identify the composite component which contains the SVHC and the exact concentration of the SVHC by requesting further quantitative analysis from the laboratory.

Test Sample:

Testing Group:

Test Result ID	Description	Test Part ID	SGS Sample ID
001	Copper-colored metal wire with colorless transparent surface A# + Silvery metal wire with red surface B# + White material C# + White material D# + Dark grey core E#	A7	SZX24-0017626-0001.C007

Test Method:
With reference to SGS In-House method, analysis was performed by ICP-OES, UV-VIS, GC-MS, HPLC-DAD/MS and Colorimetric Method.

Unless otherwise agreed in writing, this document is issued by the Company subject to its General Conditions of Service printed overleaf, available on request or accessible at http://www.sgs.com/en/Terms-and-Conditions.aspx and, for electronic format documents, subject to Terms and Conditions for Electronic Documents at http://www.sgs.com/en/Terms-and-Conditions/Terms-e-Document.aspx. Attention is drawn to the limitation of liability, indemnification and jurisdiction issues defined therein. Any holder of this document is advised that information contained hereon reflects the Company's findings at the time of its intervention only and within the limits of Client's instructions, if any. The Company's sole responsibility is to its Client and this document does not exonerate parties to a transaction from exercising all their rights and obligations under the transaction documents. This document cannot be reproduced except in full, without prior written approval of the Company. Any unauthorized alteration, forgery or falsification of the content or appearance of this document is unlawful and offenders may be prosecuted to the fullest extent of the law. Unless otherwise stated the results shown in this test report refer only to the sample(s) tested .
Attention: To check the authenticity of testing /inspection report & certificate, please contact us at telephone: (86-755) 8307 1443, or email: CN.Doccheck@sgs.com
SGS-CSTC Standards Technical Services Co., Ltd. Shenzhen Branch Testing Center Chemical Laboratory
Room 101-901, Plant 4 & Room 101, Plant 2 & Room 101, Plant 3 & Room 301-501, Plant 3, Jianghao (Bantian) Industrial Plant Area, No. 430, Jihua Road, Bantian Community, Bantian Street, Longgang District, Shenzhen, Guangdong, China 518129 www.sgsgroup.com.cn
中国·广东·深圳市龙岗区坂田街道坂田社区吉华路430号江灏（坂田）工业厂区厂房4号101-901、2号101、3号101、3号301-501 邮编:518129 t (86-755) 25328888 sgs.china@sgs.com
Member of the SGS Group (SGS SA)

Test Results: (Substances in the Candidate List of SVHC)

Batch	Substance Name	CAS No.	001 Concentration (%)	RL (%)
-	All tested SVHC in Candidate list	-	ND	-

Test Results: (Potential SVHC)

Batch	Substance Name	CAS No.	001 Concentration (%)	RL (%)
/	All tested Potential SVHC	-	ND	-

Notes:

(1) The table above only shows detected SVHC, and SVHC that below RL are not reported. Please refer to Appendix for the full list of tested SVHC.

(2) RL = Reporting Limit (Test data will be shown if it ≥ RL. RL is not regulatory limit.)
ND = Not detected (lower than RL), ND is denoted on the SVHC substance.

(3) * The result is based on the calculation of selected element(s) under the worst-case scenario, and the evaluation of substance usage and material properties.
** The test result is based on the calculation of selected marker(s) and to the worst-case scenario. Calculated concentration of boric compounds are based on water extractive boron detected by ICP-OES. Calculated concentration of Barium diboron tetraoxide is based on water extractive boron and barium detected by ICP-OES.
RL = 0.005% is evaluated for element (i.e. cobalt, arsenic, lead, chromium (VI), aluminum, zirconium, boron, strontium, zinc, antimony, titanium, barium, cadmium respectively), except molybdenum RL=0.0005%, boron RL=0.0025% (only for Lead bis(tetrafluoroborate)), fluorine RL=0.050%.

(4) § The substance is proposed for the identification as SVHC only where it contains Michler's ketone (CAS Number: 90-94-8) or Michler's base (CAS Number: 101-61-1) ≥0.1% (w/w).

(5) / = Potential SVHC

(6) Composite test has been performed in equal proportion for the components/material per client requested. And the result is calculated using the minimum sample weight.

Unless otherwise stated, the decision rule for conformity reporting is based on Binary Statement for Simple Acceptance Rule (*w*=0) stated in ILAC-G8:09/2019.

SGS-CSTC Standards Technical Services Co., Ltd. Shenzhen Branch Testing Center Chemical Laboratory
检验检测专用章 Inspection & Testing Services

Unless otherwise agreed in writing, this document is issued by the Company subject to its General Conditions of Service printed overleaf, available on request or accessible at http://www.sgs.com/en/Terms-and-Conditions.aspx and, for electronic format documents, subject to Terms and Conditions for Electronic Documents at http://www.sgs.com/en/Terms-and-Conditions/Terms-e-Document.aspx. Attention is drawn to the limitation of liability, indemnification and jurisdiction issues defined therein. Any holder of this document is advised that information contained hereon reflects the Company's findings at the time of its intervention only and within the limits of Client's instructions, if any. The Company's sole responsibility is to its Client and this document does not exonerate parties to a transaction from exercising all their rights and obligations under the transaction documents. This document cannot be reproduced except in full, without prior written approval of the Company. Any unauthorized alteration, forgery or falsification of the content or appearance of this document is unlawful and offenders may be prosecuted to the fullest extent of the law. Unless otherwise stated the results shown in this test report refer only to the sample(s) tested .
Attention: To check the authenticity of testing /inspection report & certificate, please contact us at telephone: (86-755) 8307 1443, or email: CN.Doccheck@sgs.com
Room 101-901, Plant 4 & Room 101, Plant 2 & Room 101, Plant 3 & Room 301-501, Plant 3, Jianghao (Bantian) Industrial Plant Area, No. 430, Jihua Road, Bantian Community, Bantian Street, Longgang District, Shenzhen, Guangdong, China 518129 www.sgsgroup.com.cn
中国·广东·深圳市龙岗区坂田街道坂田社区吉华路430号江灏（坂田）工业厂区厂房4号101-901、2号101、3号101、3号301-501 邮编:518129 t (86-755) 25328888 sgs.china@sgs.com
Member of the SGS Group (SGS SA)

Appendix
Full list of tested SVHC:

Batch	No.	Substance Name	CAS No.	RL (%)
I	1	4,4'-Diaminodiphenylmethane(MDA)	101-77-9	0.050
I	2	5-tert-butyl-2,4,6-trinitro-m-xylene (musk xylene)	81-15-2	0.050
I	3	Alkanes, C10-13, chloro (Short Chain Chlorinated Paraffins)	85535-84-8	0.050
I	4	Anthracene	120-12-7	0.050
I	5	Benzyl butyl phthalate (BBP)	85-68-7	0.050
I	6	Bis(2-ethylhexyl)phthalate (DEHP)	117-81-7	0.050
I	7	Bis(tributyltin)oxide (TBTO)	56-35-9	0.050
I	8	Cobalt dichloride*	7646-79-9	0.005
I	9	Diarsenic pentaoxide*	1303-28-2	0.005
I	10	Diarsenic trioxide*	1327-53-3	0.005
I	11	Dibutyl phthalate (DBP)	84-74-2	0.050
I	12	Hexabromocyclododecane (HBCDD) and all major diastereoisomers identified (α-HBCDD, β-HBCDD, γ-HBCDD)	134237-50-6 /134237-51-7 /134237-52-8 /25637-99-4 /3194-55-6	0.050
I	13	Lead hydrogen arsenate*	7784-40-9	0.005
I	14	Sodium dichromate*	10588-01-9 /7789-12-0	0.005
I	15	Triethyl arsenate*	15606-95-8	0.005
II	16	2,4-Dinitrotoluene	121-14-2	0.050
II	17	Acrylamide	79-06-1	0.050
II	18	Anthracene oil**	90640-80-5	0.050
II	19	Anthracene oil, anthracene paste**	90640-81-6	0.050
II	20	Anthracene oil, anthracene paste, anthracene fraction**	91995-15-2	0.050
II	21	Anthracene oil, anthracene paste, distn. Lights**	91995-17-4	0.050
II	22	Anthracene oil, anthracene-low**	90640-82-7	0.050
II	23	Diisobutyl phthalate	84-69-5	0.050
II	24	Lead chromate molybdate sulphate red (C.I. Pigment Red 104)*	12656-85-8	0.005
II	25	Lead chromate*	7758-97-6	0.005
II	26	Lead sulfochromate yellow (C.I. Pigment Yellow 34)*	1344-37-2	0.005
II	27	Pitch, coal tar, high temp. **	65996-93-2	0.050
II	28	Tris(2-chloroethyl)phosphate	115-96-8	0.050
III	29	Ammonium dichromate*	7789-09-5	0.005
III	30	Boric acid*	10043-35-3 /11113-50-1	0.005
III	31	Disodium tetraborate, anhydrous*	12179-04-3 /1303-96-4 /1330-43-4	0.005
III	32	Potassium chromate*	7789-00-6	0.005

SGS-CSTC Standards Technical Services Co., Ltd. Shenzhen Branch Testing Center Chemical Laboratory
检验检测专用章 Inspection & Testing Services

Unless otherwise agreed in writing, this document is issued by the Company subject to its General Conditions of Service printed overleaf, available on request or accessible at http://www.sgs.com/en/Terms-and-Conditions.aspx and, for electronic format documents, subject to Terms and Conditions for Electronic Documents at http://www.sgs.com/en/Terms-and-Conditions/Terms-e-Document.aspx. Attention is drawn to the limitation of liability, indemnification and jurisdiction issues defined therein. Any holder of this document is advised that information contained hereon reflects the Company's findings at the time of its intervention only and within the limits of Client's instructions, if any. The Company's sole responsibility is to its Client and this document does not exonerate parties to a transaction from exercising all their rights and obligations under the transaction documents. This document cannot be reproduced except in full, without prior written approval of the Company. Any unauthorized alteration, forgery or falsification of the content or appearance of this document is unlawful and offenders may be prosecuted to the fullest extent of the law. Unless otherwise stated the results shown in this test report refer only to the sample(s) tested .
Attention: To check the authenticity of testing /inspection report & certificate, please contact us at telephone: (86-755) 8307 1443, or email: CN.Doccheck@sgs.com
Room 101-901, Plant 4 & Room 101, Plant 2 & Room 101, Plant 3 & Room 301-501, Plant 3, Jianghao (Bantian) Industrial Plant Area, No. 430, Jihua Road, Bantian Community, Bantian Street, Longgang District, Shenzhen, Guangdong, China 518129 www.sgsgroup.com.cn
中国·广东·深圳市龙岗区坂田街道坂田社区吉华路430号江豪（坂田）工业厂区厂房4号101-901、2号101、3号101、3号301-501 邮编:518129 t (86-755) 25328888 sgs.china@sgs.com
Member of the SGS Group (SGS SA)

Batch	No.	Substance Name	CAS No.	RL (%)
III	33	Potassium dichromate*	7778-50-9	0.005
III	34	Sodium chromate*	7775-11-3	0.005
III	35	Tetraboron disodium heptaoxide, hydrate*	12267-73-1	0.005
III	36	Trichloroethylene	79-01-6	0.050
IV	37	2-Ethoxyethanol	110-80-5	0.050
IV	38	2-Methoxyethanol	109-86-4	0.050
IV	39	Chromic acid, Oligomers of chromic acid and dichromic acid, Dichromic acid*	13530-68-2 /7738-94-5	0.005
IV	40	Chromium trioxide*	1333-82-0	0.005
IV	41	Cobalt(II) carbonate*	513-79-1	0.005
IV	42	Cobalt(II) diacetate*	71-48-7	0.005
IV	43	Cobalt(II) dinitrate*	10141-05-6	0.005
IV	44	Cobalt(II) sulphate*	10124-43-3	0.005
V	45	1,2,3-trichloropropane	96-18-4	0.050
V	46	1,2-Benzenedicarboxylic acid, di-C6-8-branched alkyl esters, C7-rich	71888-89-6	0.050
V	47	1,2-Benzenedicarboxylic acid, di-C7-11-branched and linear alkyl esters	68515-42-4	0.050
V	48	1-methyl-2-pyrrolidone	872-50-4	0.050
V	49	2-ethoxyethyl acetate	111-15-9	0.050
V	50	Hydrazine	302-01-2 /7803-57-8	0.050
V	51	strontium chromate*	7789-06-2	0.005
VI	52	1,2-Dichloroethane	107-06-2	0.050
VI	53	2,2'-dichloro-4,4'-methylenedianiline	101-14-4	0.050
VI	54	2-Methoxyaniline; o-Anisidine	90-04-0	0.050
VI	55	4-(1,1,3,3-tetramethylbutyl)phenol	140-66-9	0.050
VI	56	Aluminosilicate Refractory Ceramic Fibres*	-	0.005
VI	57	Arsenic acid*	7778-39-4	0.005
VI	58	Bis(2-methoxyethyl) ether	111-96-6	0.050
VI	59	Bis(2-methoxyethyl) phthalate	117-82-8	0.050
VI	60	Calcium arsenate*	7778-44-1	0.005
VI	61	Dichromium tris(chromate)*	24613-89-6	0.005
VI	62	Formaldehyde, oligomeric reaction products with aniline	25214-70-4	0.050
VI	63	Lead diazide, Lead azide*	13424-46-9	0.005
VI	64	Lead dipicrate*	6477-64-1	0.005
VI	65	Lead styphnate*	15245-44-0	0.005
VI	66	N,N-dimethylacetamide	127-19-5	0.050
VI	67	Pentazinc chromate octahydroxide*	49663-84-5	0.005
VI	68	Phenolphthalein	77-09-8	0.050
VI	69	Potassium hydroxyoctaoxodizincatedichromate*	11103-86-9	0.005
VI	70	Trilead diarsenate*	3687-31-8	0.005
VI	71	Zirconia Aluminosilicate Refractory Ceramic Fibres*	-	0.005
VII	72	[4-[[4-anilino-1-naphthyl][4-(dimethylamino)phenyl]methylene]cyclohexa-	2580-56-5	0.050

SGS-CSTC Standards Technical Services Co., Ltd. Shenzhen Branch Testing Center Chemical Laboratory

Unless otherwise agreed in writing, this document is issued by the Company subject to its General Conditions of Service printed overleaf, available on request or accessible at http://www.sgs.com/en/Terms-and-Conditions.aspx and, for electronic format documents, subject to Terms and Conditions for Electronic Documents at http://www.sgs.com/en/Terms-and-Conditions/Terms-e-Document.aspx. Attention is drawn to the limitation of liability, indemnification and jurisdiction issues defined therein. Any holder of this document is advised that information contained hereon reflects the Company's findings at the time of its intervention only and within the limits of Client's instructions, if any. The Company's sole responsibility is to its Client and this document does not exonerate parties to a transaction from exercising all their rights and obligations under the transaction documents. This document cannot be reproduced except in full, without prior written approval of the Company. Any unauthorized alteration, forgery or falsification of the content or appearance of this document is unlawful and offenders may be prosecuted to the fullest extent of the law. Unless otherwise stated the results shown in this test report refer only to the sample(s) tested .

Attention: To check the authenticity of testing /inspection report & certificate, please contact us at telephone: (86-755) 8307 1443, or email: CN.Doccheck@sgs.com

Room 101-901, Plant 4 & Room 101, Plant 2 & Room 101, Plant 3 & Room 301-501, Plant 3, Jianghao (Bantian) Industrial Plant Area, No. 430, Jihua Road, Bantian Community, Bantian Street, Longgang District, Shenzhen, Guangdong, China 518129 www.sgsgroup.com.cn

中国·广东·深圳市龙岗区坂田街道坂田社区吉华路430号江灏（坂田）工业厂区厂房4号101-901、2号101、3号101、3号301-501 邮编:518129 t (86-755) 25328888 sgs.china@sgs.com

Member of the SGS Group (SGS SA)

Batch	No.	Substance Name	CAS No.	RL (%)
		2,5-dien-1-ylidene] dimethylammonium chloride (C.I. Basic Blue 26)§		
VII	73	[4-[4,4'-bis(dimethylamino) benzhydrylidene]cyclohexa-2,5-dien-1-ylidene]dimethylammonium chloride (C.I. Basic Violet 3) §	548-62-9	0.050
VII	74	1,2-bis(2-methoxyethoxy)ethane (TEGDME; triglyme)	112-49-2	0.050
VII	75	1,2-dimethoxyethane; ethylene glycol dimethyl ether (EGDME)	110-71-4	0.050
VII	76	4,4'-bis(dimethylamino) benzophenone (Michler's Ketone)	90-94-8	0.050
VII	77	4,4'-bis(dimethylamino)-4''-(methylamino)trityl alcohol§	561-41-1	0.050
VII	78	Diboron trioxide*	1303-86-2	0.005
VII	79	Formamide	75-12-7	0.050
VII	80	Lead(II) bis(methanesulfonate)*	17570-76-2	0.005
VII	81	N,N,N',N'-tetramethyl-4,4'-methylenedianiline (Michler's base)	101-61-1	0.050
VII	82	TGIC (1,3,5-tris(oxiranylmethyl)-1,3,5-triazine-2,4,6(1H,3H,5H)-trione)	2451-62-9	0.050
VII	83	α,α-Bis[4-(dimethylamino)phenyl]-4 (phenylamino)naphthalene-1-methanol (C.I. Solvent Blue 4) §	6786-83-0	0.050
VII	84	β-TGIC (1,3,5-tris[(2S and 2R)-2,3-epoxypropyl]-1,3,5-triazine-2,4,6-(1H,3H,5H)-trione)	59653-74-6	0.050
VIII	85	[Phthalato(2-)]dioxotrilead*	69011-06-9	0.005
VIII	86	1,2-Benzenedicarboxylic acid, dipentylester, branched and linear	84777-06-0	0.050
VIII	87	1,2-Diethoxyethane	629-14-1	0.050
VIII	88	1-Bromopropane	106-94-5	0.050
VIII	89	3-Ethyl-2-methyl-2-(3-methylbutyl)-1,3-oxazolidine	143860-04-2	0.050
VIII	90	4-(1,1,3,3-tetramethylbutyl)phenol, ethoxylated	-	0.050
VIII	91	4,4'-Methylenedi-o-toluidine	838-88-0	0.050
VIII	92	4,4'-Oxydianiline and its salts	101-80-4	0.050
VIII	93	4-Aminoazobenzene	60-09-3	0.050
VIII	94	4-Methyl-m-phenylenediamine	95-80-7	0.050
VIII	95	4-Nonylphenol, branched and linear	84852-15-3	0.050
VIII	96	6-Methoxy-m-toluidine	120-71-8	0.050
VIII	97	Acetic acid, lead salt, basic*	51404-69-4	0.005
VIII	98	Biphenyl-4-ylamine	92-67-1	0.050
VIII	99	Decabromodiphenyl ether (DecaBDE)	1163-19-5	0.050
VIII	100	Cyclohexane-1,2-dicarboxylic anhydride, cis-cyclohexane-1,2-dicarboxylic anhydride, trans-cyclohexane-1,2-dicarboxylic anhydride	13149-00-3 /14166-21-3 /85-42-7	0.050

SGS-CSTC Standards Technical Services Co., Ltd. Shenzhen Branch Testing Center Chemical Laboratory
检验检测专用章 Inspection & Testing Services

Unless otherwise agreed in writing, this document is issued by the Company subject to its General Conditions of Service printed overleaf, available on request or accessible at http://www.sgs.com/en/Terms-and-Conditions.aspx and, for electronic format documents, subject to Terms and Conditions for Electronic Documents at http://www.sgs.com/en/Terms-and-Conditions/Terms-e-Document.aspx. Attention is drawn to the limitation of liability, indemnification and jurisdiction issues defined therein. Any holder of this document is advised that information contained hereon reflects the Company's findings at the time of its intervention only and within the limits of Client's instructions, if any. The Company's sole responsibility is to its Client and this document does not exonerate parties to a transaction from exercising all their rights and obligations under the transaction documents. This document cannot be reproduced except in full, without prior written approval of the Company. Any unauthorized alteration, forgery or falsification of the content or appearance of this document is unlawful and offenders may be prosecuted to the fullest extent of the law. Unless otherwise stated the results shown in this test report refer only to the sample(s) tested .
Attention: To check the authenticity of testing /inspection report & certificate, please contact us at telephone: (86-755) 8307 1443, or email: CN.Doccheck@sgs.com
Room 101-901, Plant 4 & Room 101, Plant 2 & Room 101, Plant 3 & Room 301-501, Plant 3, Jianghao (Bantian) Industrial Plant Area, No. 430, Jihua Road, Bantian Community, Bantian Street, Longgang District, Shenzhen, Guangdong, China 518129 www.sgsgroup.com.cn
中国·广东·深圳市龙岗区坂田街道坂田社区吉华路430号江灏（坂田）工业厂区厂房4号101-901、2号101、3号101、3号301-501 邮编:518129 t (86-755) 25328888 sgs.china@sgs.com
Member of the SGS Group (SGS SA)

Batch	No.	Substance Name	CAS No.	RL (%)
VIII	101	Diazene-1,2-dicarboxamide (C,C'-azodi(formamide))	123-77-3	0.050
VIII	102	Dibutyltin dichloride (DBTC)	683-18-1	0.050
VIII	103	Diethyl sulphate	64-67-5	0.050
VIII	104	Diisopentylphthalate	605-50-5	0.050
VIII	105	Dimethyl sulphate	77-78-1	0.050
VIII	106	Dinoseb	88-85-7	0.050
VIII	107	Dioxobis(stearato)trilead*	12578-12-0	0.005
VIII	108	Fatty acids, C16-18, lead salts*	91031-62-8	0.005
VIII	109	Furan	110-00-9	0.050
VIII	110	Henicosafluoroundecanoic acid	2058-94-8	0.050
VIII	111	Heptacosafluorotetradecanoic acid	376-06-7	0.050
VIII	112	Hexahydromethylphthalic anhydride, Hexahydro-4-methylphthalic anhydride, Hexahydro-1-methylphthalic anhydride, Hexahydro-3-methylphthalic anhydride	-	0.050
VIII	113	Lead bis(tetrafluoroborate)*	13814-96-5	0.005
VIII	114	Lead cyanamidate*	20837-86-9	0.005
VIII	115	Lead dinitrate*	10099-74-8	0.005
VIII	116	Lead monoxide*	1317-36-8	0.005
VIII	117	Lead oxide sulfate*	12036-76-9	0.005
VIII	118	Lead tetroxide (orange lead)*	1314-41-6	0.005
VIII	119	Lead titanium trioxide*	12060-00-3	0.005
VIII	120	Lead titanium zirconium oxide*	12626-81-2	0.005
VIII	121	Methoxyacetic acid	625-45-6	0.050
VIII	122	Methyloxirane (Propylene oxide)	75-56-9	0.050
VIII	123	N,N-Dimethylformamide	68-12-2	0.050
VIII	124	N-Methylacetamide	79-16-3	0.050
VIII	125	N-Pentyl-isopentylphthalate	776297-69-9	0.050
VIII	126	o-Aminoazotoluene	97-56-3	0.050
VIII	127	o-Toluidine	95-53-4	0.050
VIII	128	Pentacosafluorotridecanoic acid	72629-94-8	0.050
VIII	129	Pentalead tetraoxide sulphate*	12065-90-6	0.005
VIII	130	Pyrochlore, antimony lead yellow*	8012-00-8	0.005
VIII	131	Silicic acid, barium salt, lead-doped*	68784-75-8	0.005
VIII	132	Silicic acid, lead salt*	11120-22-2	0.005
VIII	133	Sulfurous acid, lead salt, dibasic*	62229-08-7	0.005
VIII	134	Tetraethyllead*	78-00-2	0.005
VIII	135	Tetralead trioxide sulphate*	12202-17-4	0.005
VIII	136	Tricosafluorododecanoic acid	307-55-1	0.050
VIII	137	Trilead bis(carbonate)dihydroxide (basic lead carbonate)*	1319-46-6	0.005
VIII	138	Trilead dioxide phosphonate*	12141-20-7	0.005
IX	139	4-Nonylphenol, branched and linear, ethoxylated	127087-87-0 /26027-38-3 /37205-87-1 /68412-54-4 /9016-45-9	0.050

SGS-CSTC Standards Technical Services Co., Ltd. Shenzhen Branch Testing Center Chemical Laboratory
检验检测专用章 Inspection & Testing Services

Unless otherwise agreed in writing, this document is issued by the Company subject to its General Conditions of Service printed overleaf, available on request or accessible at http://www.sgs.com/en/Terms-and-Conditions.aspx and, for electronic format documents, subject to Terms and Conditions for Electronic Documents at http://www.sgs.com/en/Terms-and-Conditions/Terms-e-Document.aspx. Attention is drawn to the limitation of liability, indemnification and jurisdiction issues defined therein. Any holder of this document is advised that information contained hereon reflects the Company's findings at the time of its intervention only and within the limits of Client's instructions, if any. The Company's sole responsibility is to its Client and this document does not exonerate parties to a transaction from exercising all their rights and obligations under the transaction documents. This document cannot be reproduced except in full, without prior written approval of the Company. Any unauthorized alteration, forgery or falsification of the content or appearance of this document is unlawful and offenders may be prosecuted to the fullest extent of the law. Unless otherwise stated the results shown in this test report refer only to the sample(s) tested .
Attention: To check the authenticity of testing /inspection report & certificate, please contact us at telephone: (86-755) 8307 1443, or email: CN.Doccheck@sgs.com
Room 101-901, Plant 4 & Room 101, Plant 2 & Room 101, Plant 3 & Room 301-501, Plant 3, Jianghao (Bantian) Industrial Plant Area, No. 430, Jihua Road, Bantian Community, Bantian Street, Longgang District, Shenzhen, Guangdong, China 518129 www.sgsgroup.com.cn
中国·广东·深圳市龙岗区坂田街道坂田社区吉华路430号江豪（坂田）工业厂区厂房4号101-901、2号101、3号101、3号301-501 邮编:518129 t (86-755) 25328888 sgs.china@sgs.com
Member of the SGS Group (SGS SA)

Batch	No.	Substance Name	CAS No.	RL (%)
IX	140	Ammonium pentadecafluorooctanoate (APFO)**	3825-26-1	0.050
IX	141	Cadmium oxide*	1306-19-0	0.005
IX	142	Cadmium	7440-43-9	0.005
IX	143	Dipentyl phthalate (DPP)	131-18-0	0.050
IX	144	Pentadecafluorooctanoic acid (PFOA)	335-67-1	0.050
X	145	Cadmium sulphide*	1306-23-6	0.005
X	146	Dihexyl phthalate	84-75-3	0.050
X	147	Disodium 3,3'-[[1,1'-biphenyl]-4,4'-diylbis(azo)]bis(4-aminonaphthalene-1-sulphonate) (C.I. Direct Red 28)	573-58-0	0.050
X	148	Disodium 4-amino-3-[[4'-[(2,4-diaminophenyl)azo][1,1'-biphenyl]-4-yl]azo] -5-hydroxy-6-(phenylazo)naphthalene-2,7-disulphonate (C.I. Direct Black 38)	1937-37-7	0.050
X	149	Imidazolidine-2-thione; (2-imidazoline-2-thiol)	96-45-7	0.050
X	150	Lead di(acetate)*	301-04-2	0.005
X	151	Trixylyl phosphate	25155-23-1	0.050
XI	152	1,2-Benzenedicarboxylic acid, dihexyl ester, branched and linear	68515-50-4	0.050
XI	153	Cadmium chloride*	10108-64-2	0.005
XI	154	Sodium perborate; perboric acid, sodium salt*	-	0.005
XI	155	Sodium peroxometaborate*	7632-04-4	0.005
XII	156	2-(2H-benzotriazol-2-yl)-4,6-ditertpentylphenol (UV-328)	25973-55-1	0.050
XII	157	2-benzotriazol-2-yl-4,6-di-tert-butylphenol (UV-320)	3846-71-7	0.050
XII	158	2-ethylhexyl 10-ethyl-4,4-dioctyl-7-oxo-8-oxa-3,5-dithia-4-stannatetradecanoate (DOTE)	15571-58-1	0.050
XII	159	Cadmium fluoride*	7790-79-6	0.005
XII	160	Cadmium sulphate*	10124-36-4 /31119-53-6	0.005
XII	161	Reaction mass of 2-ethylhexyl 10-ethyl-4,4-dioctyl-7-oxo-8-oxa-3,5-dithia-4-stannatetradecanoate & 2-ethylhexyl 10-ethyl-4-[[2-[(2-ethylhexyl)oxy]-2-oxoethyl]thio]-4-octyl-7-oxo-8-oxa-3,5-dithia-4-stannatetradecanoate (reaction mass of DOTE & MOTE)	-	0.050
XIII	162	1,2-benzenedicarboxylic acid, di-C6-10-alkyl esters; 1,2-benzenedicarboxylic acid, mixed decyl and hexyl and octyl diesters with ≥ 0.3% of dihexyl phthalate	68515-51-5 /68648-93-1	0.050
XIII	163	5-sec-butyl-2-(2,4-dimethylcyclohex-3-en-1-yl)-5-methyl-1,3-dioxane [1], 5-sec-butyl-2-(4,6-dimethylcyclohex-3-en-1-yl)-5-methyl-1,3-dioxane [2] [covering any of the individual isomers of [1] and [2] or any combination thereof]	-	0.050

SGS-CSTC Standards Technical Services Co., Ltd. Shenzhen Branch Testing Center Chemical Laboratory
检验检测专用章 Inspection & Testing Services

Unless otherwise agreed in writing, this document is issued by the Company subject to its General Conditions of Service printed overleaf, available on request or accessible at http://www.sgs.com/en/Terms-and-Conditions.aspx and, for electronic format documents, subject to Terms and Conditions for Electronic Documents at http://www.sgs.com/en/Terms-and-Conditions/Terms-e-Document.aspx. Attention is drawn to the limitation of liability, indemnification and jurisdiction issues defined therein. Any holder of this document is advised that information contained hereon reflects the Company's findings at the time of its intervention only and within the limits of Client's instructions, if any. The Company's sole responsibility is to its Client and this document does not exonerate parties to a transaction from exercising all their rights and obligations under the transaction documents. This document cannot be reproduced except in full, without prior written approval of the Company. Any unauthorized alteration, forgery or falsification of the content or appearance of this document is unlawful and offenders may be prosecuted to the fullest extent of the law. Unless otherwise stated the results shown in this test report refer only to the sample(s) tested .
Attention: To check the authenticity of testing /inspection report & certificate, please contact us at telephone: (86-755) 8307 1443, or email: CN.Doccheck@sgs.com
Room 101-901, Plant 4 & Room 101, Plant 2 & Room 101, Plant 3 & Room 301-501, Plant 3, Jianghao (Bantian) Industrial Plant Area, No. 430, Jihua Road, Bantian Community, Bantian Street, Longgang District, Shenzhen, Guangdong, China 518129 www.sgsgroup.com.cn
中国·广东·深圳市龙岗区坂田街道坂田社区吉华路430号江灏（坂田）工业厂区厂房4号101-901、2号101、3号101、3号301-501 邮编:518129 t (86-755) 25328888 sgs.china@sgs.com
Member of the SGS Group (SGS SA)

Batch	No.	Substance Name	CAS No.	RL (%)
XIV	164	1,3-propanesultone	1120-71-4	0.050
XIV	165	2,4-di-tert-butyl-6-(5-chlorobenzotriazol-2-yl) phenol (UV-327)	3864-99-1	0.050
XIV	166	2-(2H-benzotriazol-2-yl)-4-(tert-butyl)-6-(sec-butyl) phenol (UV-350)	36437-37-3	0.050
XIV	167	Nitrobenzene	98-95-3	0.050
XIV	168	Perfluorononan-1-oic-acid and its sodium and ammonium salts	375-95-1	0.050
XV	169	Benzo[def]chrysene (Benzo[a]pyrene)	50-32-8	0.050
XVI	170	4,4'-isopropylidenediphenol (bisphenol A)	80-05-7	0.050
XVI	171	4-Heptylphenol, branched and linear	-	0.050
XVI	172	Nonadecafluorodecanoic acid (PFDA) and its sodium and ammonium salts	3108-42-7 /335-76-2 /3830-45-3	0.050
XVI	173	p-(1,1-dimethylpropyl)phenol	80-46-6	0.050
XVII	174	Perfluorohexane-1-sulphonic acid and its salts	-	0.050
XVIII	175	1,6,7,8,9,14,15,16,17,17,18,18-Dodecachloropentacyclo[12.2.1.16,9.02,13.05,10]octadeca-7,15-diene ("Dechlorane Plus"™) [covering any of its individual anti- and syn-isomers or any combination thereof]	-	0.050
XVIII	176	Benz[a]anthracene	56-55-3	0.050
XVIII	177	Cadmium nitrate*	10325-94-7	0.005
XVIII	178	Cadmium carbonate*	513-78-0	0.005
XVIII	179	Cadmium hydroxide*	21041-95-2	0.005
XVIII	180	Chrysene	218-01-9	0.050
XVIII	181	Reaction products of 1,3,4-thiadiazolidine-2,5-dithione, formaldehyde and 4-heptylphenol, branched and linear (RP-HP) [with ≥0.1% w/w 4-heptylphenol, branched and linear]	-	0.050
XIX	182	Benzene-1,2,4-tricarboxylic acid 1,2 anhydride (trimellitic anhydride) (TMA)	552-30-7	0.050
XIX	183	Benzo[ghi]perylene	191-24-2	0.050
XIX	184	Decamethylcyclopentasiloxane (D5)	541-02-6	0.050
XIX	185	Dicyclohexyl phthalate (DCHP)	84-61-7	0.050
XIX	186	Disodium octaborate*	12008-41-2	0.005
XIX	187	Dodecamethylcyclohexasiloxane (D6)	540-97-6	0.050
XIX	188	Ethylenediamine (EDA)	107-15-3	0.050
XIX	189	Lead	7439-92-1	0.005
XIX	190	Octamethylcyclotetrasiloxane (D4)	556-67-2	0.050
XIX	191	Terphenyl, hydrogenated	61788-32-7	0.050
XX	192	1,7,7-trimethyl-3-(phenylmethylene)bicyclo[2.2.1]heptan-2-one (3-benzylidene camphor)	15087-24-8	0.050
XX	193	2,2-bis(4'-hydroxyphenyl)-4-methylpentane	6807-17-6	0.050
XX	194	Benzo[k]fluoranthene	207-08-9	0.050
XX	195	Fluoranthene	206-44-0	0.050
XX	196	Phenanthrene	85-01-8	0.050

SGS-CSTC Standards Technical Services Co., Ltd. Shenzhen Branch Testing Center Chemical Laboratory

Unless otherwise agreed in writing, this document is issued by the Company subject to its General Conditions of Service printed overleaf, available on request or accessible at http://www.sgs.com/en/Terms-and-Conditions.aspx and, for electronic format documents, subject to Terms and Conditions for Electronic Documents at http://www.sgs.com/en/Terms-and-Conditions/Terms-e-Document.aspx. Attention is drawn to the limitation of liability, indemnification and jurisdiction issues defined therein. Any holder of this document is advised that information contained hereon reflects the Company's findings at the time of its intervention only and within the limits of Client's instructions, if any. The Company's sole responsibility is to its Client and this document does not exonerate parties to a transaction from exercising all their rights and obligations under the transaction documents. This document cannot be reproduced except in full, without prior written approval of the Company. Any unauthorized alteration, forgery or falsification of the content or appearance of this document is unlawful and offenders may be prosecuted to the fullest extent of the law. Unless otherwise stated the results shown in this test report refer only to the sample(s) tested .

Attention: To check the authenticity of testing /inspection report & certificate, please contact us at telephone: (86-755) 8307 1443, or email: CN.Doccheck@sgs.com

Room 101-901, Plant 4 & Room 101, Plant 2 & Room 101, Plant 3 & Room 301-501, Plant 3, Jianghao (Bantian) Industrial Plant Area, No. 430, Jihua Road, Bantian Community, Bantian Street, Longgang District, Shenzhen, Guangdong, China 518129 www.sgsgroup.com.cn

中国·广东·深圳市龙岗区坂田街道坂田社区吉华路430号江豪（坂田）工业厂区厂房4号101-901、2号101、3号101、3号301-501 邮编:518129 t (86-755) 25328888 sgs.china@sgs.com

Member of the SGS Group (SGS SA)

Batch	No.	Substance Name	CAS No.	RL (%)
XX	197	Pyrene	129-00-0	0.050
XXI	198	2,3,3,3-tetrafluoro-2-(heptafluoropropoxy)propionic acid, its salts and its acyl halides (covering any of their individual isomers and combinations thereof)	-	0.050
XXI	199	2-methoxyethyl acetate	110-49-6	0.050
XXI	200	4-tert-butylphenol (PTBP)	98-54-4	0.050
XXI	201	Tris(4-nonylphenyl, branched and linear) phosphite (TNPP) with ≥ 0.1% w/w of 4-nonylphenol, branched and linear (4-NP)	-	0.050
XXII	202	2-benzyl-2-dimethylamino-4'-morpholinobutyrophenone	119313-12-1	0.050
XXII	203	2-methyl-1-(4-methylthiophenyl)-2-morpholinopropan-1-one	71868-10-5	0.050
XXII	204	Diisohexyl phthalate	71850-09-4	0.050
XXII	205	Perfluorobutane sulfonic acid (PFBS) and its salts	-	0.050
XXIII	206	1-vinylimidazole	1072-63-5	0.050
XXIII	207	2-methylimidazole	693-98-1	0.050
XXIII	208	Butyl 4-hydroxybenzoate	94-26-8	0.050
XXIII	209	Dibutylbis(pentane-2,4-dionato-O,O')tin**	22673-19-4	0.050
XXIV	210	bis(2-(2-methoxyethoxy)ethyl) ether	143-24-8	0.050
XXIV	211	Dioctyltin dilaurate, stannane, dioctyl-, bis(coco acyloxy) derivs., and any other stannane, dioctyl-, bis(fatty acyloxy) derivs. wherein C12 is the predominant carbon number of the fatty acyloxy moiety**	-	0.050
XXV	212	1,4-Dioxane	123-91-1	0.050
XXV	213	2,2-bis(bromomethyl)propane1,3-diol (BMP); 2,2-dimethylpropan-1-ol, tribromo derivative/3-bromo-2,2-bis(bromomethyl)-1-propanol (TBNPA); 2,3-dibromo-1-propanol (2,3-DBPA)	1522-92-5 /3296-90-0 /36483-57-5 /96-13-9	0.050
XXV	214	2-(4-tert-butylbenzyl)propionaldehyde and its individual stereoisomers	-	0.050
XXV	215	4,4'-(1-methylpropylidene)bisphenol; (bisphenol B)	77-40-7	0.050
XXV	216	Glutaral	111-30-8	0.050
XXV	217	Medium-chain chlorinated paraffins (MCCP) [UVCB substances consisting of more than or equal to 80% linear chloroalkanes with carbon chain lengths within the range from C14 to C17]	85535-85-9	0.050
XXV	218	Orthoboric acid, sodium salt*	13840-56-7	0.005
XXV	219	Phenol, alkylation products (mainly in para position) with C12-rich branched or linear alkyl chains from oligomerisation, covering any individual isomers and/ or combinations thereof (PDDP)	-	0.050

SGS-CSTC Standards Technical Services Co., Ltd. Shenzhen Branch Testing Center Chemical Laboratory
检验检测专用章 Inspection & Testing Services

Unless otherwise agreed in writing, this document is issued by the Company subject to its General Conditions of Service printed overleaf, available on request or accessible at http://www.sgs.com/en/Terms-and-Conditions.aspx and, for electronic format documents, subject to Terms and Conditions for Electronic Documents at http://www.sgs.com/en/Terms-and-Conditions/Terms-e-Document.aspx. Attention is drawn to the limitation of liability, indemnification and jurisdiction issues defined therein. Any holder of this document is advised that information contained hereon reflects the Company's findings at the time of its intervention only and within the limits of Client's instructions, if any. The Company's sole responsibility is to its Client and this document does not exonerate parties to a transaction from exercising all their rights and obligations under the transaction documents. This document cannot be reproduced except in full, without prior written approval of the Company. Any unauthorized alteration, forgery or falsification of the content or appearance of this document is unlawful and offenders may be prosecuted to the fullest extent of the law. Unless otherwise stated the results shown in this test report refer only to the sample(s) tested .
Attention: To check the authenticity of testing /inspection report & certificate, please contact us at telephone: (86-755) 8307 1443, or email: CN.Doccheck@sgs.com
Room 101-901, Plant 4 & Room 101, Plant 2 & Room 101, Plant 3 & Room 301-501, Plant 3, Jianghao (Bantian) Industrial Plant Area, No. 430, Jihua Road, Bantian Community, Bantian Street, Longgang District, Shenzhen, Guangdong, China 518129 www.sgsgroup.com.cn
中国·广东·深圳市龙岗区坂田街道坂田社区吉华路430号江灏（坂田）工业厂区厂房4号101-901、2号101、3号101、3号301-501 邮编:518129 t (86-755) 25328888 sgs.china@sgs.com
Member of the SGS Group (SGS SA)

Batch	No.	Substance Name	CAS No.	RL (%)
XXVI	220	(±)-1,7,7-trimethyl-3-[(4-methylphenyl)methylene]bicyclo[2.2.1]heptan-2-one covering any of the individual isomers and/or combinations thereof (4-MBC)	-	0.050
XXVI	221	6,6'-di-tert-butyl-2,2'-methylenedi-p-cresol (DBMC)	119-47-1	0.050
XXVI	222	S-(tricyclo[5.2.1.0'2,6]deca-3-en-8(or 9)-yl) O-(isopropyl or isobutyl or 2-ethylhexyl) O-(isopropyl or isobutyl or 2-ethylhexyl) phosphorodithioate	255881-94-8	0.050
XXVI	223	Tris(2-methoxyethoxy)vinylsilane	1067-53-4	0.050
XXVII	224	N-(hydroxymethyl)acrylamide	924-42-5	0.050
XXVIII	225	1,1'-[ethane-1,2-diylbisoxy]bis[2,4,6-tribromobenzene]	37853-59-1	0.050
XXVIII	226	2,2',6,6'-tetrabromo-4,4'-isopropylidenediphenol	79-94-7	0.050
XXVIII	227	4,4'-sulphonyldiphenol	80-09-1	0.050
XXVIII	228	Barium diboron tetraoxide*	13701-59-2	0.005
XXVIII	229	Bis(2-ethylhexyl) tetrabromophthalate covering any of the individual isomers and/or combinations thereof	26040-51-7	0.050
XXVIII	230	Isobutyl 4-hydroxybenzoate	4247-02-3	0.050
XXVIII	231	Melamine	108-78-1	0.050
XXVIII	232	Perfluoroheptanoic acid and its salts	-	0.050
XXVIII	233	reaction mass of 2,2,3,3,5,5,6,6-octafluoro-4-(1,1,1,2,3,3,3-heptafluoropropan-2-yl)morpholine and 2,2,3,3,5,5,6,6-octafluoro-4-(heptafluoropropyl)morpholine*	-	0.050
XXIX	234	Bis(4-chlorophenyl) sulphone	80-07-9	0.050
XXIX	235	Diphenyl(2,4,6-trimethylbenzoyl)phosphine oxide	75980-60-8	0.050
XXX	236	2,4,6-tri-tert-butylphenol	732-26-3	0.050
XXX	237	2-(2H-benzotriazol-2-yl)-4-(1,1,3,3-tetramethylbutyl)phenol (UV-329)	3147-75-9	0.050
XXX	238	2-(dimethylamino)-2-[(4-methylphenyl)methyl]-1-[4-(morpholin-4-yl)phenyl]butan-1-one	119344-86-4	0.050
XXX	239	Bumetrizole (UV-326)	3896-11-5	0.050
XXX	240	Oligomerisation and alkylation reaction products of 2-phenylpropene and phenol	-	0.050
/	241	Bis(α,α-dimethylbenzyl) peroxide	80-43-3	0.050
/	242	Triphenyl phosphate	115-86-6	0.050
/	243	Resorcinol	108-46-3	0.050
/	244	Octamethyltrisiloxane	107-51-7	0.050
/	245	1,1,1,3,5,5,5-heptamethyl-3-[(trimethylsilyl)oxy]trisiloxane	17928-28-8	0.050
/	246	1,1,1,3,5,5,5-heptamethyltrisiloxane	1873-88-7	0.050
/	247	Decamethyltetrasiloxane	141-62-8	0.050
/	248	Dodecamethylpentasiloxane	141-63-9	0.050

SGS-CSTC Standards Technical Services Co., Ltd. Shenzhen Branch Testing Center Chemical Laboratory
检验检测专用章 Inspection & Testing Services

Unless otherwise agreed in writing, this document is issued by the Company subject to its General Conditions of Service printed overleaf, available on request or accessible at http://www.sgs.com/en/Terms-and-Conditions.aspx and, for electronic format documents, subject to Terms and Conditions for Electronic Documents at http://www.sgs.com/en/Terms-and-Conditions/Terms-e-Document.aspx. Attention is drawn to the limitation of liability, indemnification and jurisdiction issues defined therein. Any holder of this document is advised that information contained hereon reflects the Company's findings at the time of its intervention only and within the limits of Client's instructions, if any. The Company's sole responsibility is to its Client and this document does not exonerate parties to a transaction from exercising all their rights and obligations under the transaction documents. This document cannot be reproduced except in full, without prior written approval of the Company. Any unauthorized alteration, forgery or falsification of the content or appearance of this document is unlawful and offenders may be prosecuted to the fullest extent of the law. Unless otherwise stated the results shown in this test report refer only to the sample(s) tested .
Attention: To check the authenticity of testing /inspection report & certificate, please contact us at telephone: (86-755) 8307 1443, or email: CN.Doccheck@sgs.com
Room 101-901, Plant 4 & Room 101, Plant 2 & Room 101, Plant 3 & Room 301-501, Plant 3, Jianghao (Bantian) Industrial Plant Area, No. 430, Jihua Road, Bantian Community, Bantian Street, Longgang District, Shenzhen, Guangdong, China 518129 www.sgsgroup.com.cn
中国·广东·深圳市龙岗区坂田街道坂田社区吉华路430号江灏（坂田）工业厂区厂房4号101-901、2号101、3号101、3号301-501 邮编:518129 t (86-755) 25328888 sgs.china@sgs.com
Member of the SGS Group (SGS SA)

Batch	No.	Substance Name	CAS No.	RL (%)
/	249	Hexamethyldisiloxane	107-46-0	0.050

Unless otherwise agreed in writing, this document is issued by the Company subject to its General Conditions of Service printed overleaf, available on request or accessible at http://www.sgs.com/en/Terms-and-Conditions.aspx and, for electronic format documents, subject to Terms and Conditions for Electronic Documents at http://www.sgs.com/en/Terms-and-Conditions/Terms-e-Document.aspx. Attention is drawn to the limitation of liability, indemnification and jurisdiction issues defined therein. Any holder of this document is advised that information contained hereon reflects the Company's findings at the time of its intervention only and within the limits of Client's instructions, if any. The Company's sole responsibility is to its Client and this document does not exonerate parties to a transaction from exercising all their rights and obligations under the transaction documents. This document cannot be reproduced except in full, without prior written approval of the Company. Any unauthorized alteration, forgery or falsification of the content or appearance of this document is unlawful and offenders may be prosecuted to the fullest extent of the law. Unless otherwise stated the results shown in this test report refer only to the sample(s) tested .
Attention: To check the authenticity of testing /inspection report & certificate, please contact us at telephone: (86-755) 8307 1443, or email: CN.Doccheck@sgs.com
SGS-CSTC Standards Technical Services Co., Ltd. Shenzhen Branch Testing Center Chemical Laboratory
Room 101-901, Plant 4 & Room 101, Plant 2 & Room 101, Plant 3 & Room 301-501, Plant 3, Jianghao (Bantian) Industrial Plant Area, No. 430, Jihua Road, Bantian Community, Bantian Street, Longgang District, Shenzhen, Guangdong, China 518129 www.sgsgroup.com.cn
中国·广东·深圳市龙岗区坂田街道坂田社区吉华路430号江灏（坂田）工业厂区厂房4号101-901、2号101、3号101、3号301-501 邮编:518129 t (86-755) 25328888 sgs.china@sgs.com
Member of the SGS Group (SGS SA)

ATTACHMENTS

Testing Flow Chart

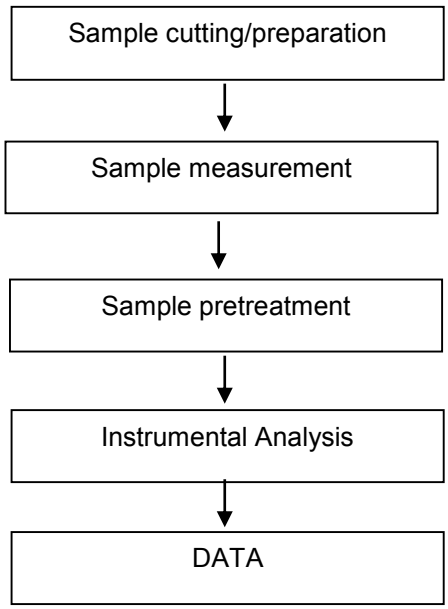

Unless otherwise agreed in writing, this document is issued by the Company subject to its General Conditions of Service printed overleaf, available on request or accessible at http://www.sgs.com/en/Terms-and-Conditions.aspx and, for electronic format documents, subject to Terms and Conditions for Electronic Documents at http://www.sgs.com/en/Terms-and-Conditions/Terms-e-Document.aspx. Attention is drawn to the limitation of liability, indemnification and jurisdiction issues defined therein. Any holder of this document is advised that information contained hereon reflects the Company's findings at the time of its intervention only and within the limits of Client's instructions, if any. The Company's sole responsibility is to its Client and this document does not exonerate parties to a transaction from exercising all their rights and obligations under the transaction documents. This document cannot be reproduced except in full, without prior written approval of the Company. Any unauthorized alteration, forgery or falsification of the content or appearance of this document is unlawful and offenders may be prosecuted to the fullest extent of the law. Unless otherwise stated the results shown in this test report refer only to the sample(s) tested .
Attention: To check the authenticity of testing /inspection report & certificate, please contact us at telephone: (86-755) 8307 1443, or email: CN.Doccheck@sgs.com
SGS-CSTC Standards Technical Services Co., Ltd. Shenzhen Branch Testing Center Chemical Laboratory
Room 101-901, Plant 4 & Room 101, Plant 2 & Room 101, Plant 3 & Room 301-501, Plant 3, Jianghao (Bantian) Industrial Plant Area, No. 430, Jihua Road, Bantian Community, Bantian Street, Longgang District, Shenzhen, Guangdong, China 518129 www.sgsgroup.com.cn
中国·广东·深圳市龙岗区坂田街道坂田社区吉华路430号江灏（坂田）工业厂区厂房4号101-901、2号101、3号101、3号301-501 邮编:518129 t (86-755) 25328888 sgs.china@sgs.com
Member of the SGS Group (SGS SA)

Sample photos:

SZX24-0017626-0001.C007

SGS authenticate the photo on original report only

*** End of Report ***

Unless otherwise agreed in writing, this document is issued by the Company subject to its General Conditions of Service printed overleaf, available on request or accessible at http://www.sgs.com/en/Terms-and-Conditions.aspx and, for electronic format documents, subject to Terms and Conditions for Electronic Documents at http://www.sgs.com/en/Terms-and-Conditions/Terms-e-Document.aspx. Attention is drawn to the limitation of liability, indemnification and jurisdiction issues defined therein. Any holder of this document is advised that information contained hereon reflects the Company's findings at the time of its intervention only and within the limits of Client's instructions, if any. The Company's sole responsibility is to its Client and this document does not exonerate parties to a transaction from exercising all their rights and obligations under the transaction documents. This document cannot be reproduced except in full, without prior written approval of the Company. Any unauthorized alteration, forgery or falsification of the content or appearance of this document is unlawful and offenders may be prosecuted to the fullest extent of the law. Unless otherwise stated the results shown in this test report refer only to the sample(s) tested .

Attention: To check the authenticity of testing /inspection report & certificate, please contact us at telephone: (86-755) 8307 1443, or email: CN.Doccheck@sgs.com

SGS-CSTC Standards Technical Services Co., Ltd. Shenzhen Branch Testing Center Chemical Laboratory

Room 101-901, Plant 4 & Room 101, Plant 2 & Room 101, Plant 3 & Room 301-501, Plant 3, Jianghao (Bantian) Industrial Plant Area, No. 430, Jihua Road, Bantian Community, Bantian Street, Longgang District, Shenzhen, Guangdong, China 518129 www.sgsgroup.com.cn

中国·广东·深圳市龙岗区坂田街道坂田社区吉华路430号江灏（坂田）工业厂区厂房4号101-901、2号101、3号101、3号301-501 邮编:518129 t (86-755) 25328888 sgs.china@sgs.com

Member of the SGS Group (SGS SA)