Reference Manual
00809-0200-7062, Rev AA
March 2023

Rosemount™ 1208C Level and Flow Transmitter

Non-Contacting Radar

ROSEMOUNT™

EMERSON™

Safety messages

NOTICE

Read this manual before working with the product. For personal and system safety, and for optimum product performance, make sure you thoroughly understand the contents before installing, using, or maintaining this product.

For technical assistance, contacts are listed below:

Customer Central

Technical support, quoting, and order-related questions.

- United States - 1-800-999-9307 (7:00 am to 7:00 pm CST)
- Asia Pacific- 65 777 8211

North American Response Center

Equipment service needs.

- 1-800-654-7768 (24 hours a day — includes Canada)
- Outside of these areas, contact your local Emerson representative.

⚠ WARNING

Failure to follow safe installation and servicing guidelines could result in death or serious injury.

Ensure the transmitter is installed by qualified personnel and in accordance with applicable code of practice.

Inspection and maintenance of this equipment shall be carried out by suitably trained personnel, in accordance with the applicable standards and code of practice.

Use the equipment only as specified in this manual. Failure to do so may impair the protection provided by the equipment.

Repair, e.g. substitution of components, etc. may jeopardize safety and is under no circumstances allowed.

⚠ WARNING

Explosions could result in death or serious injury.

To prevent ignition of flammable or combustible atmospheres, disconnect power before servicing.

Before connecting a handheld communicator in an explosive atmosphere, ensure that the instruments are installed in accordance with intrinsically safe or non-incendive field wiring practices.

⚠ WARNING

Process leaks could result in death or serious injury.

Handle the transmitter carefully.

Install and tighten process connectors before applying pressure.

Do not attempt to loosen or remove process connectors while the transmitter is in service.

⚠ WARNING

Physical access

Unauthorized personnel may potentially cause significant damage to and/or misconfiguration of end users' equipment. This could be intentional or unintentional and needs to be protected against.

Physical security is an important part of any security program and fundamental in protecting your system. Restrict physical access by unauthorized personnel to protect end users' assets. This is true for all systems used within the facility.

⚠ CAUTION

Hot surfaces

The transmitter and process seal may be hot at high process temperatures. Allow to cool before servicing.

Contents

Chapter 1 Introduction 7
1.1 Using this manual 7
1.2 Product certifications 7
1.3 Open source licenses 7
1.4 Product recycling/disposal 7

Chapter 2 Transmitter overview 9
2.1 Measurement principle 9
2.2 Process characteristics 9
2.3 Vessel characteristics 10
2.4 Non-contacting radar technology 10
2.5 Components of the transmitter 12
2.6 System integration 13

Chapter 3 Mechanical installation 15
3.1 Safety messages 15
3.2 Installation considerations 15
3.3 Bracket mounting 19
3.4 Installing on a tank 26

Chapter 4 Electrical installation 29
4.1 Safety messages 29
4.2 Prepare the electrical connections 29
4.3 Power up transmitter 31
4.4 Optional devices 31

Chapter 5 Configuration 33
5.1 Safety messages 33
5.2 Overview 33
5.3 Configuration tools 34
5.4 Confirm correct device driver 34
5.5 AMS Device Configurator 34
5.6 Configure transmitter using guided setup 34
5.7 Multidrop communication 35
5.8 Write protect a transmitter 35

Chapter 6 Operation and maintenance 37
6.1 Safety messages 37
6.2 View measurement data 38
6.3 Check device status 38

Chapter 7 Service and troubleshooting 41
7.1 Safety messages 41
7.2 Diagnostic messages per NAMUR NE 107 42
7.3 Troubleshooting guides 48
7.4 Managing disturbance echoes 63

7.5 Service and troubleshooting tools 64
7.6 Service support 66

Appendix A Specifications and reference data 67
A.1 Performance specifications 67
A.2 Functional specifications 69
A.3 Physical specifications 71
A.4 Dimensional drawings 73

Appendix B Configuration parameters 76
B.1 Menu tree 76
B.2 Device setup 76
B.3 Level setup 80

1 Introduction

1.1 Using this manual

The sections in this manual provide information on installing, operating, and maintaining the Rosemount™ 1208C Level and Flow Transmitter – Non-Contacting Radar.

The sections are organized as follows:

Transmitter overview provides an introduction to theory of operation, a description of the transmitter, information on typical applications, and process characteristics.

Mechanical installation contains mechanical installation instructions.

Electrical installation contains electrical installation instructions.

Configuration provides instructions on configuration of the transmitter.

Operation and maintenance contains operation and maintenance techniques.

Service and troubleshooting provides troubleshooting techniques for the most common operating problems.

Specifications and reference data supplies reference and specification data.

Configuration parameters provides extended information about the configuration parameters.

1.2 Product certifications

See the Rosemount 1208C Product Certifications document for detailed information on the existing approvals and certifications.

1.3 Open source licenses

This device uses open source software. Further information can be found in the License Information document available at Emerson.com/Rosemount.

1.4 Product recycling/disposal

Recycling of equipment and packaging should be taken into consideration and disposed of in accordance with local and national legislation or regulations.

Related information

Service support

2 Transmitter overview

2.1 Measurement principle

The Rosemount 1208C is a two-wire transmitter for continuous level measurements using fast-sweep Frequency Modulated Continuous Wave (FMCW) technology.

The transmitter continuously emits signal sweeps with a constantly varying frequency towards the product surface. Since the transmitter continuously changes the frequency of the transmitted signal, there will be a difference in frequency between the transmitted and the reflected signals (see Figure 2-1).

The frequency of the reflected signal is subtracted from the frequency of the signal transmitted at that moment, resulting in a low frequency signal which is proportional to the distance to the product surface. This signal is further processed to obtain fast, reliable, and highly accurate level measurements.

Figure 2-1: FMCW-method

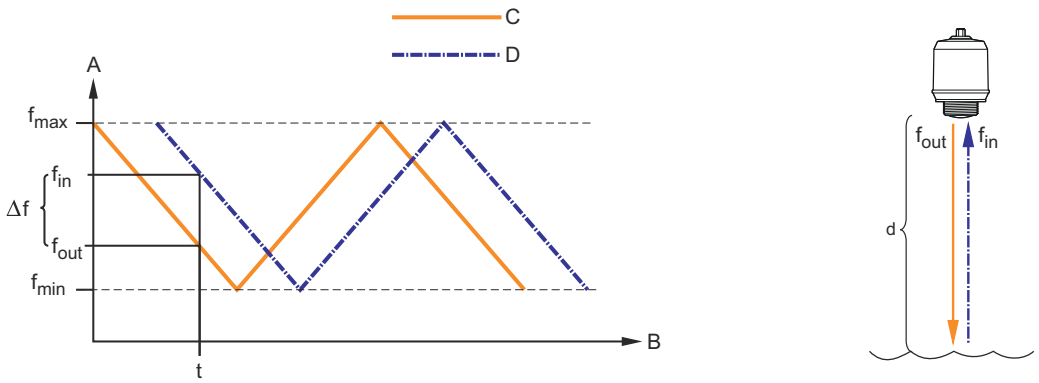

Δf∼d=distance

A. Frequency (GHz)
B. Time (s)
C. Transmitted signal
D. Reflected signal

The Rosemount 1208C can also calculate the volume flow rate in an open channel.

2.2 Process characteristics

2.2.1 Dielectric constant

A key parameter for measurement performance is reflectivity. A high dielectric constant of the media provides better reflection and enables a longer measuring range.

2.2.2 Foam and turbulence

Foaming liquids or turbulence may cause weak and varying surface echo amplitudes. Surface turbulence is not normally a problem unless it is excessive.

Measurement in foamy applications depends largely on the foam properties. When the foam is light and airy, the actual product level is measured. For heavy and dense foam, the transmitter may measure the level of the foam's upper surface.

2.3 Vessel characteristics

2.3.1 In-tank obstructions

The transmitter should be mounted so that objects such as heating coils, ladders, and agitators are not in the radar signal path. These objects may cause false echoes resulting in reduced measurement performance. However, the transmitter has built-in functions designed to reduce the influence from disturbing objects where such objects cannot be totally avoided.

Vertical and inclined structures cause minimal effect since the radar signal is scattered rather than directed back to the antenna.

2.4 Non-contacting radar technology

Non-contacting radar technology is ideal for a wide range of applications as it is maintenance-free, has a top-down installation that reduces the risk of leakages, and is unaffected by process conditions such as density, viscosity, temperature, pressure, and pH.

The Rosemount 1208C uses Frequency Modulated Continuous Wave (FMCW) technology and smart algorithms to maximize measurement accuracy and reliability, even in small tanks and challenging fast-filling vessels.

2.4.1 Application examples

Level and pump control

Pump stations need accurate measurement and control to ensure an optimal water flow to the next stage of the potabiliztion process, while also avoiding overflows and pumps from dry-running. Level measurement is essential to ensure a sustainable extraction of water and a sufficient supply of water to the next phases of the potabilization process.

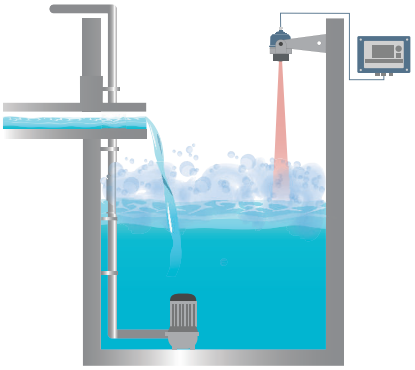

Open channel flow

Open-air channels transport water from a water source to a water plant where it will be processed. Flow monitoring in open channels is important to know the amount of water that is flowing to comply with regulations and avoid flooding.

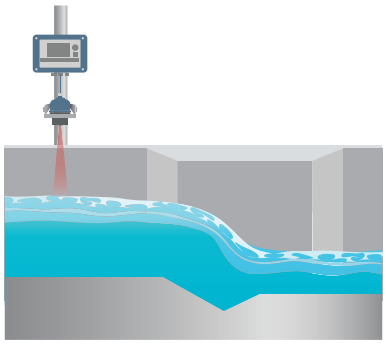

Differential level

In the screening process level measurement is necessary to monitor the level of water in the different parts of the screen, which will determine when to start the cleaning of the sieve.

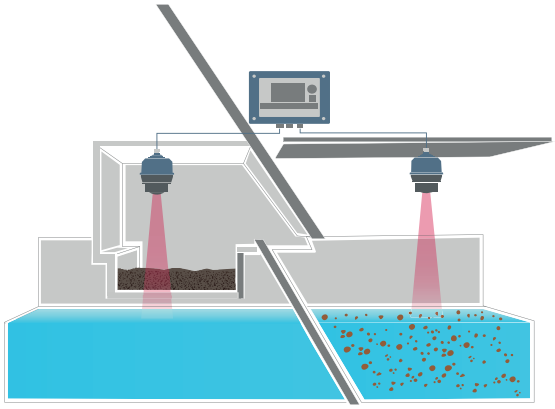

Tank volume

Storage tanks are used in water processes to store chemical substances, which are needed to treat the water. Level measurement is necessary to monitor, optimize chemical dosing, and avoid overfilling.

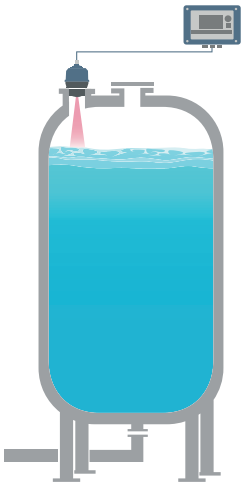

2.5 Components of the transmitter

Figure 2-2: Components

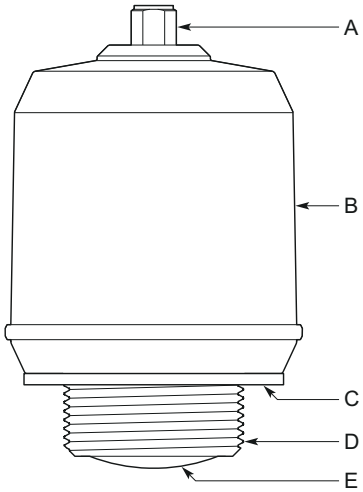

A. M12 male connector (A-coded)
B. Transmitter housing
C. Gasket for G threaded version
D. NPT 1½-in. or ISO 228/1-G1½-in. thread
E. Antenna

Related information

Dimensional drawings

2.6 System integration

The transmitter is loop-powered, and uses the same two wires for power supply and output signal. The output is a 4-20 mA analog signal superimposed with a digital HART® signal.

With the HART protocol, multidrop configuration is possible. In this case, communication is restricted to digital, since current is fixed to the 4 mA minimum value.

Figure 2-3: System Architecture

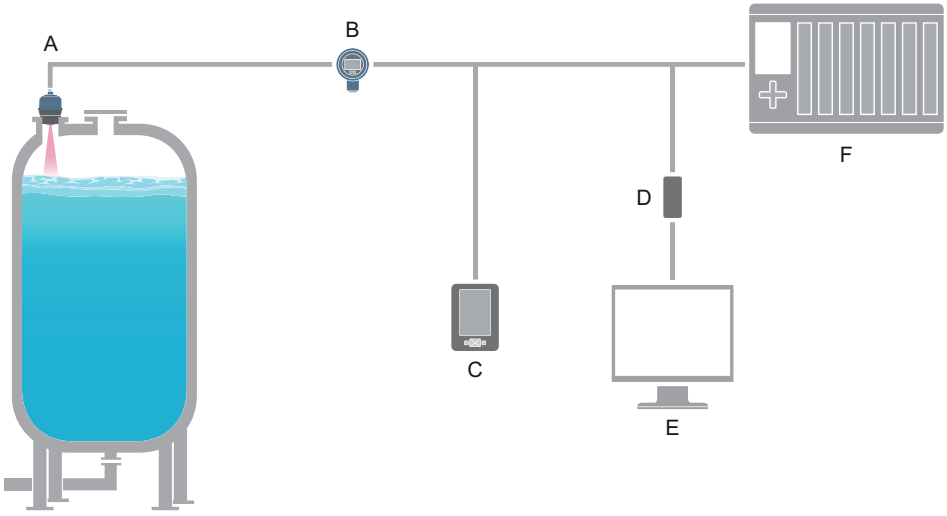

A. Rosemount 1208C
B. Rosemount 751 Field Signal Indicator
C. Handheld communicator
D. HART modem
E. PC with AMS Device Configurator
F. Host/DCS system

The Rosemount 1208C is compliant with NAMUR NE 107 Field Diagnostics for standardized device diagnostic information.

2.6.1 Easy integration into control systems

Connect the Rosemount 1208C to your host system or visualize and control your process data by pairing with the Rosemount 3490 Controller. The controller provides comprehensive control functionality for any of your 4–20 mA or HART compatible devices.

Related information

Rosemount 3490 Reference Manual

3 Mechanical installation

3.1 Safety messages

Instructions and procedures in this section may require special precautions to ensure the safety of the personnel performing the operations. Information that potentially raises safety issues is indicated by a warning symbol (⚠). Refer to the following safety messages before performing an operation preceded by this symbol.

⚠ WARNING

Failure to follow safe installation and servicing guidelines could result in death or serious injury.

Ensure the transmitter is installed by qualified personnel and in accordance with applicable code of practice.

Inspection and maintenance of this equipment shall be carried out by suitably trained personnel, in accordance with the applicable standards and code of practice.

Use the equipment only as specified in this manual. Failure to do so may impair the protection provided by the equipment.

Repair, e.g. substitution of components, etc. may jeopardize safety and is under no circumstances allowed.

⚠ WARNING

Explosions could result in death or serious injury.

To prevent ignition of flammable or combustible atmospheres, disconnect power before servicing.

Before connecting a handheld communicator in an explosive atmosphere, ensure that the instruments are installed in accordance with intrinsically safe or non-incendive field wiring practices.

⚠ WARNING

Process leaks could result in death or serious injury.

Handle the transmitter carefully.

Install and tighten process connectors before applying pressure.

Do not attempt to loosen or remove process connectors while the transmitter is in service.

3.2 Installation considerations

Before installing the transmitter, follow recommendations for mounting position, sufficient free space, nozzle requirements, etc.

3.2.1 Mounting position

When finding an appropriate location on the tank for the transmitter, the conditions of the tank must be carefully considered.

Consider the following guidelines when mounting the transmitter:

- For optimal performance, the transmitter should be installed in locations with a clear and unobstructed view of the product surface.
- The transmitter should be mounted with as few internal structures as possible within the signal beam.
- Do not mount close to or above the inlet stream.
- Do not mount the transmitter on a manway cover.
- Do not position the transmitter directly over a side manway door.
- Multiple Rosemount 1208C transmitters can be used in the same tank without interfering with each other.

Figure 3-1: Recommended Mounting Position

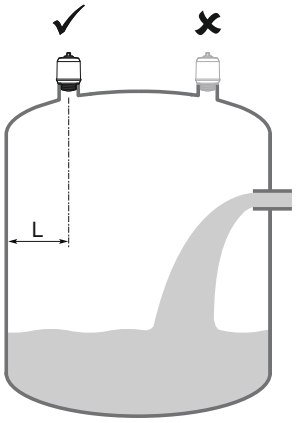

3.2.2 Free space requirements

If the transmitter is mounted close to a wall or other tank obstruction such as heating coils and ladders, noise might appear in the measurement signal. See Table 3-1 for recommended clearance.

Figure 3-2: Free Space Requirements

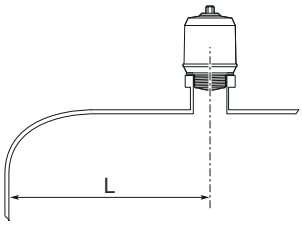

Table 3-1: Distance to Tank Wall (L)

Minimum	Recommended
8 in. (200 mm)	½ of tank radius

3.2.3 Inclination

The transmitter should be mounted vertically to ensure a good echo from the product surface. See Figure 3-3 for recommended maximum inclination.

Figure 3-3: Inclination

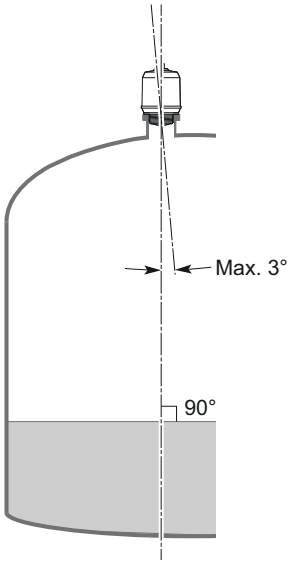

3.2.4 Non-metallic tanks

Nearby objects outside the tank may cause disturbing radar echoes. Wherever possible, the transmitter should be positioned so that objects close to the tank are kept outside the signal beam.

3.2.5 Beam angle and beam width

The transmitter should be mounted with as few internal structures as possible within the signal beam.

Figure 3-4: Beam Angle and Beam Width

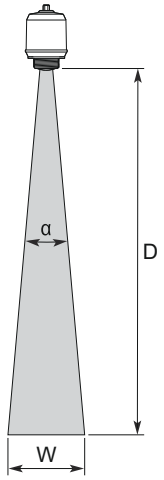

Beam angle (α)

8°

Beam width

See Table 3-2 for beam width at different distances.

Table 3-2: Beam Width

Distance (D)	Beam width (W)
6.6 ft. (2 m)	0.9 ft. (0.3 m)
13.1 ft. (4 m)	1.8 ft. (0.6 m)
19.7 ft. (6 m)	2.8 ft. (0.8 m)
26.2 ft. (8 m)	3.7 ft. (1.1 m)
32.8 ft. (10 m)	4.6 ft. (1.4 m)
49.2 ft. (15 m)	6.9 ft. (2.1 m)

3.2.6 Nozzle requirements

To allow the microwaves to propagate undisturbed, the nozzle dimensions should be kept within the specified limits as given in Table 3-3. The inside of the nozzle must be smooth (i.e. avoid bad welding, rust, or deposit).

Figure 3-5: Mounting in Nozzles

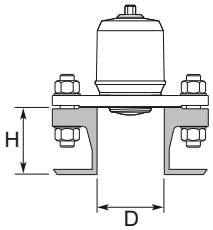

Table 3-3: Nozzle Requirements

Nozzle diameter (D)	Maximum nozzle height (H)
1.5 in. (40 mm)	5.9 in. (150 mm)
2 in. (50 mm)	7.9 in. (200 mm)
3 in. (80 mm)	11.8 in. (300 mm)
4 in. (100 mm)	15.8 in. (400 mm)
6 in. (150 mm)	23.6 in. (600 mm)

3.3 Bracket mounting

3.3.1 Mount the standard bracket

Procedure

1. Mount the bracket on the pipe/ceiling/wall.

   On pipe:

   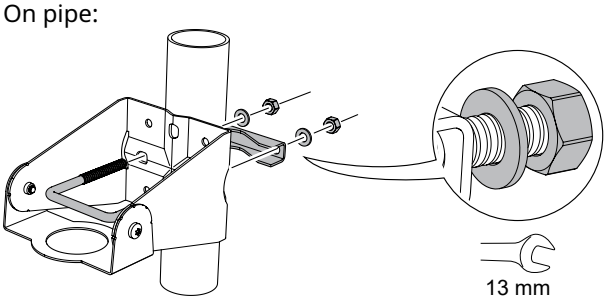

   or

   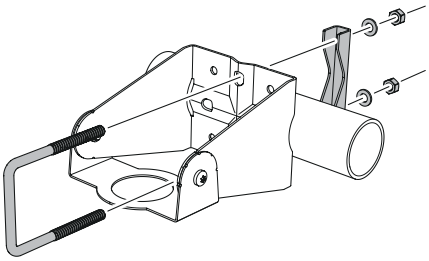

   On ceiling/wall:

   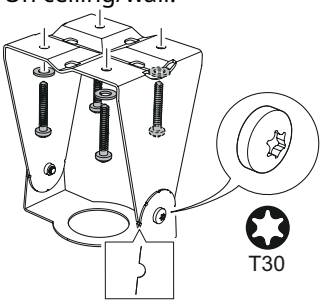

2. Ensure the adjustable holder is directed toward the ground.

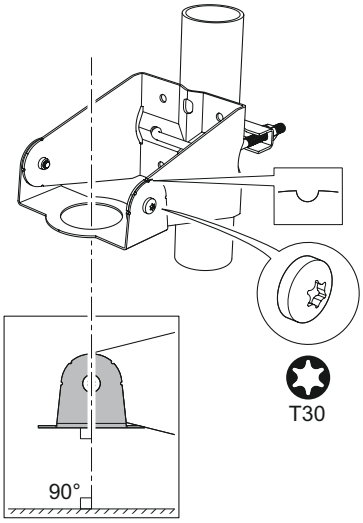

3. Install and hand tighten the transmitter.

Note
The nut is shipped with the transmitter.

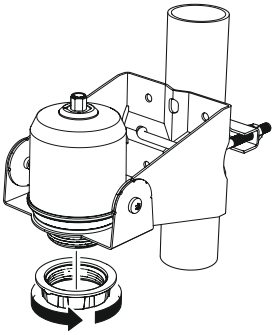

Related information

Bracket hole pattern

3.3.2 Mount the extendable bracket

Procedure

1. Mount the bracket on the pipe/wall.

   On pipe:

   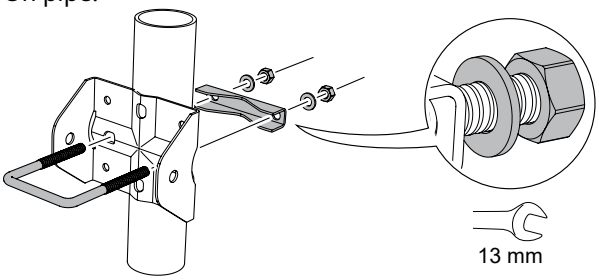

   or

   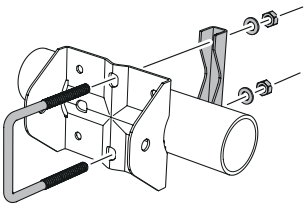

   On wall:

   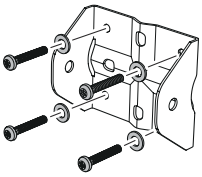

2. Mount the extendable arm.
   Do not fully tighten the screws at this stage.

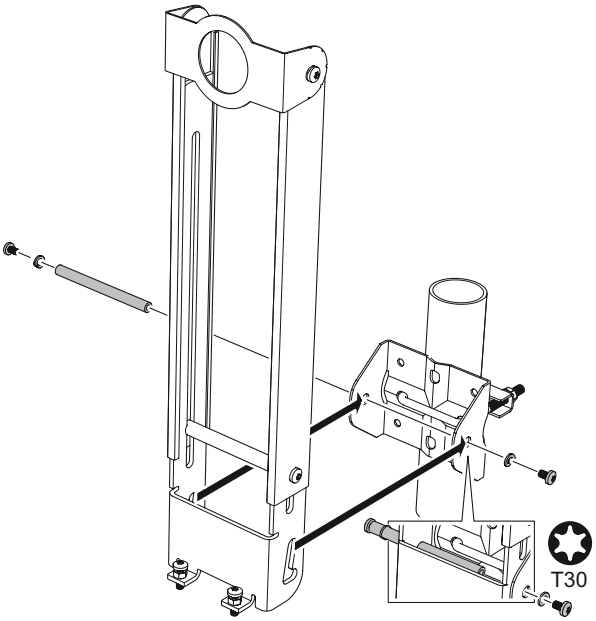

3. Install and hand tighten the transmitter

Note
The nut is shipped with the transmitter.

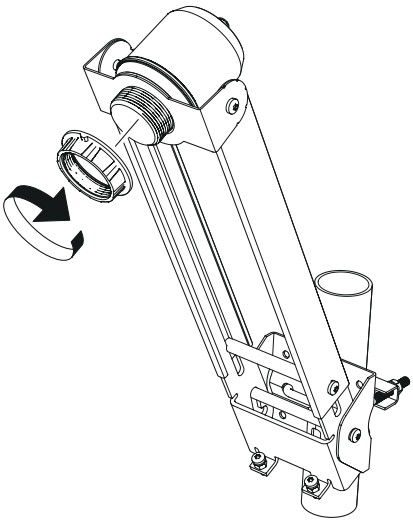

4. Connect the M12 cable.

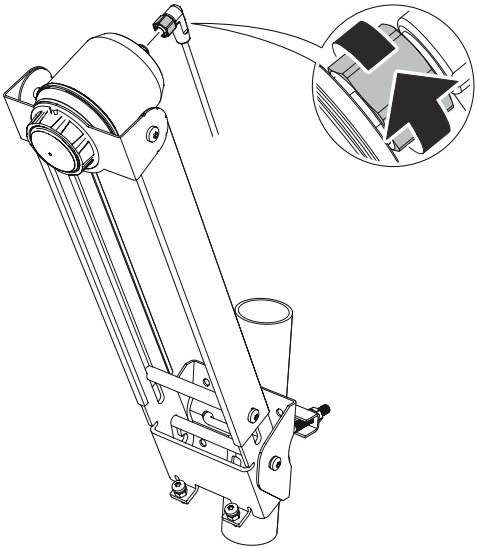

5. Ensure the adjustable holder is properly aligned.

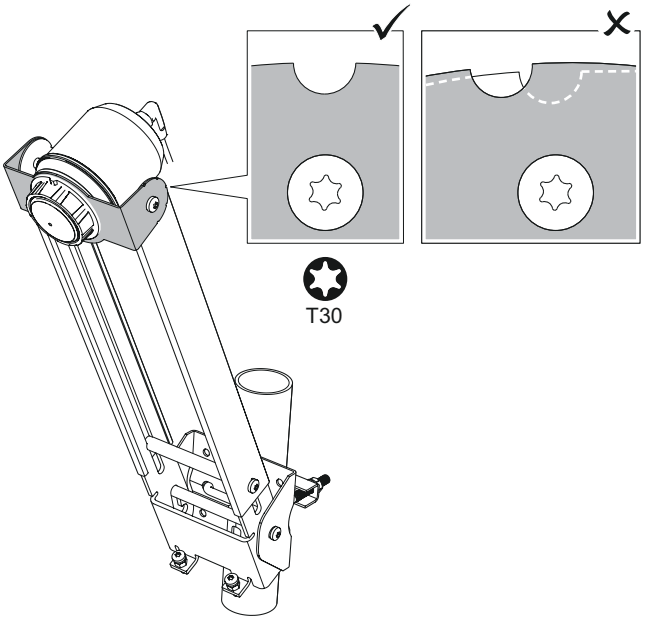

6. Fold down the arm to a horizontal position.

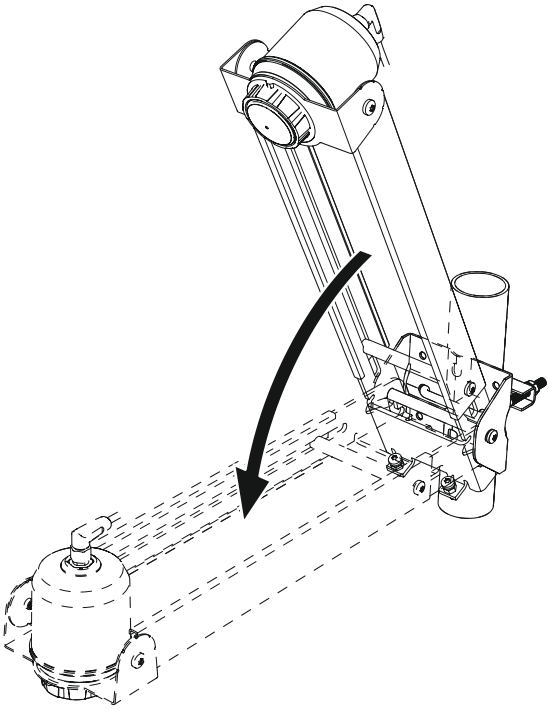

7. Adjust the length of the arm as necessary. Then tighten the two screws.

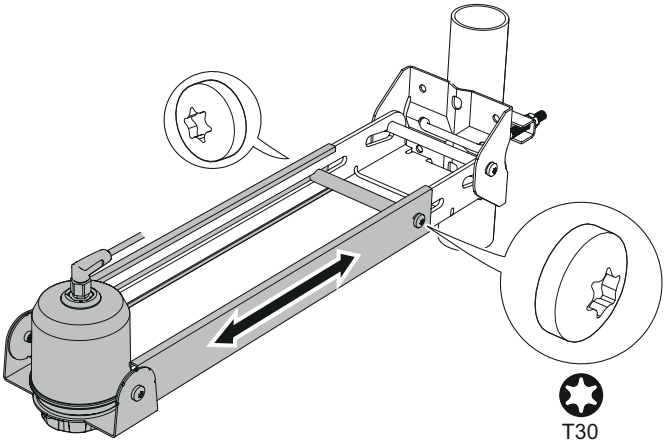

8. Check that the bracket installation is level.

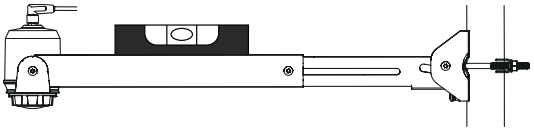

To raise or lower the arm, adjust the two level screws. Then tighten the two nuts.

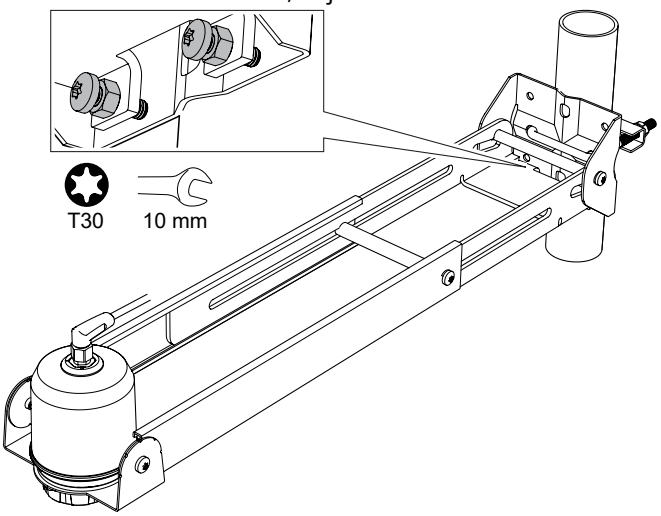

9. Tighten the two screws.

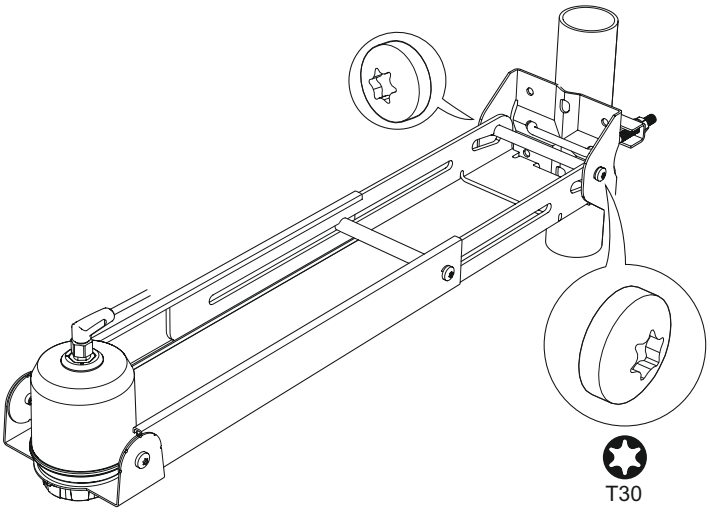

Related information

Bracket hole pattern

3.4 Installing on a tank

3.4.1 Mount the flange

Procedure

1. Place a suitable gasket on the tank flange.

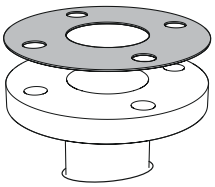

2. Place the flange over the gasket.

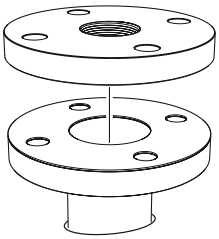

3. Tighten the bolts and nuts with sufficient torque for the flange and gasket choice.

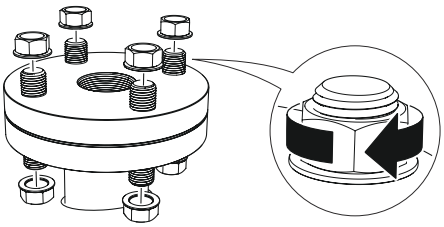

4. Apply appropriate thread sealant to the transmitter threads.

Note
Only for NPT threaded tank connection.

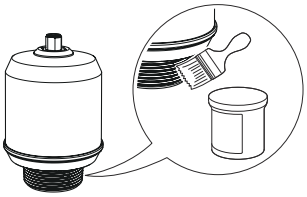

5. Install and hand tighten the transmitter.

Note
The gasket is necessary for the G threaded version only.

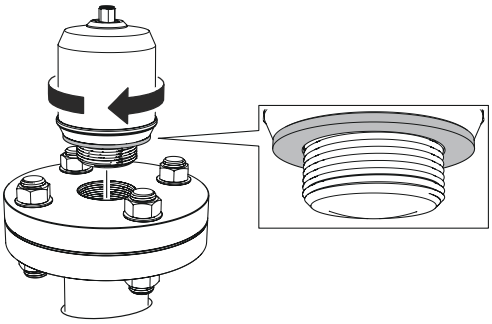

3.4.2 Mount the NPT threaded adapter

Procedure

1. Apply appropriate thread sealant to the outer threads.

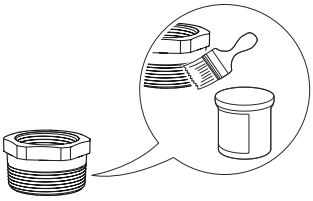

2. Mount the threaded adapter on the tank.

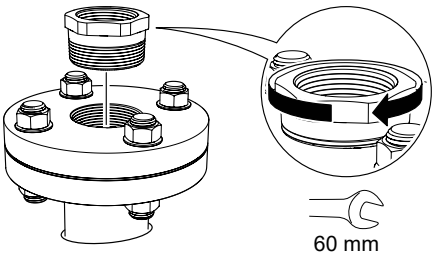

3. Apply appropriate thread sealant to the transmitter threads.

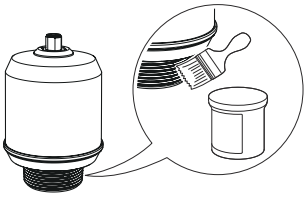

4. Install and hand tighten the transmitter.

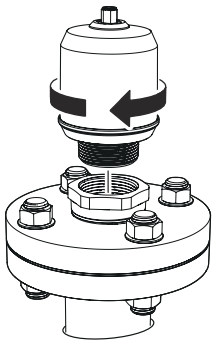

4 Electrical installation

4.1 Safety messages

Instructions and procedures in this section may require special precautions to ensure the safety of the personnel performing the operations. Information that potentially raises safety issues is indicated by a warning symbol (⚠). Refer to the following safety messages before performing an operation preceded by this symbol.

⚠ WARNING

Failure to follow safe installation and servicing guidelines could result in death or serious injury.

Ensure the transmitter is installed by qualified personnel and in accordance with applicable code of practice.

Inspection and maintenance of this equipment shall be carried out by suitably trained personnel, in accordance with the applicable standards and code of practice.

Use the equipment only as specified in this manual. Failure to do so may impair the protection provided by the equipment.

Repair, e.g. substitution of components, etc. may jeopardize safety and is under no circumstances allowed.

⚠ WARNING

Explosions could result in death or serious injury.

To prevent ignition of flammable or combustible atmospheres, disconnect power before servicing.

Before connecting a handheld communicator in an explosive atmosphere, ensure that the instruments are installed in accordance with intrinsically safe or non-incendive field wiring practices.

⚠ WARNING

Process leaks could result in death or serious injury.

Handle the transmitter carefully.

Install and tighten process connectors before applying pressure.

Do not attempt to loosen or remove process connectors while the transmitter is in service.

4.2 Prepare the electrical connections

4.2.1 Connector type

M12 male (A-coded)

4.2.2 Cable selection

Use 24-18 AWG wire (0.20-0.75 mm^2). Twisted pairs and shielded wiring are recommended for environments with high EMI (electromagnetic interference).

4.2.3 Internal power consumption

< 0.8 W in normal operation

4.2.4 Cable shield grounding

Make sure the instrument cable shield is:

- Continuously connected throughout the segment.
- Connected to a good earth ground at the power supply end.

4.2.5 Power supply

The transmitter operates on 14-35 Vdc at the transmitter terminals.

4.2.6 Load limitations

For HART® communication, a minimum loop resistance of 250 Ω is required. Maximum loop resistance (R) is determined by the voltage level of the external power supply (U_E):

$R = 44.4 \times (U_E - 14)$

Figure 4-1: Load Limits

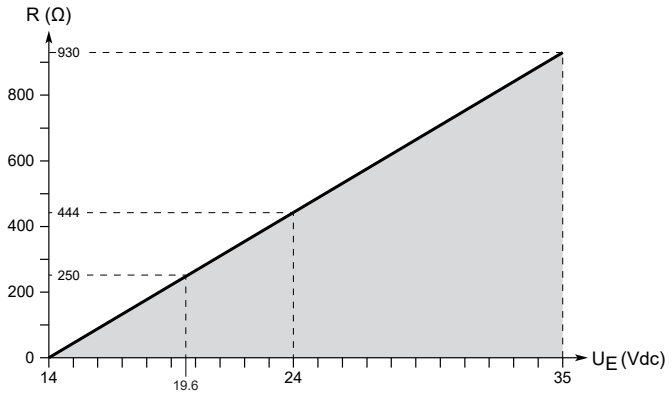

4.2.7 Wiring diagram

Figure 4-2: Connection

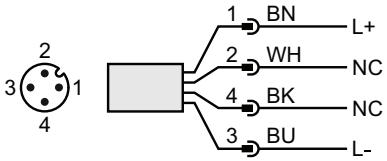

Table 4-1: Pin Assignment

Pin	Wire color[(1)]		Signal	
1	BN	Brown	L+	24 V
2	WH	White	NC	Not connected
3	BU	Blue	L-	0 V
4	BK	Black	NC	Not connected

(1) According to IEC 60947-5-2.

4.3 Power up transmitter

Procedure

1. ⚠ Verify the power supply is disconnected.
2. Insert the M12 connector gently.

   Note
   Do not force the connector into place. Check that it is aligned properly.

   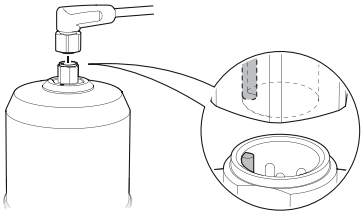

3. Once fully inserted, turn the screw ring until tight.
   See the manufacturer's instruction manual for recommended torque.

   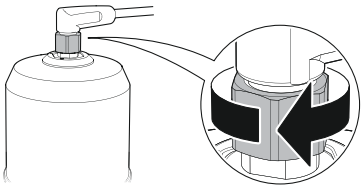

4. Connect the power supply.

Related information

Ingress protection

4.4 Optional devices

4.4.1 Rosemount 3490 Controller

Refer to the Rosemount 3490 Reference Manual for instructions on how to connect to the controller.

5 Configuration

5.1 Safety messages

Instructions and procedures in this section may require special precautions to ensure the safety of the personnel performing the operations. Information that potentially raises safety issues is indicated by a warning symbol (⚠). Refer to the following safety messages before performing an operation preceded by this symbol.

⚠ WARNING

Failure to follow safe installation and servicing guidelines could result in death or serious injury.

Ensure the transmitter is installed by qualified personnel and in accordance with applicable code of practice.

Inspection and maintenance of this equipment shall be carried out by suitably trained personnel, in accordance with the applicable standards and code of practice.

Use the equipment only as specified in this manual. Failure to do so may impair the protection provided by the equipment.

Repair, e.g. substitution of components, etc. may jeopardize safety and is under no circumstances allowed.

⚠ WARNING

Explosions could result in death or serious injury.

To prevent ignition of flammable or combustible atmospheres, disconnect power before servicing.

Before connecting a handheld communicator in an explosive atmosphere, ensure that the instruments are installed in accordance with intrinsically safe or non-incendive field wiring practices.

⚠ WARNING

Process leaks could result in death or serious injury.

Handle the transmitter carefully.

Install and tighten process connectors before applying pressure.

Do not attempt to loosen or remove process connectors while the transmitter is in service.

5.2 Overview

This chapter provides information about configuration and configuration tools. Appendix Configuration parameters provides extended information about the configuration parameters.

5.3 Configuration tools

- Field Device Integration (FDI) compliant systems
- Device Descriptor (DD) compliant systems
- Device Type Manager (DTM™) compliant systems (pending)

5.4 Confirm correct device driver

Procedure

1. Verify that the correct FDI/DD/DTM Package is loaded on your systems to ensure proper communication.
2. Download the latest FDI/DD/DTM Package at Emerson.com/DeviceInstallKits.

5.5 AMS Device Configurator

5.5.1 Download AMS Device Configurator

AMS Device Configurator is a software for configuration of Emerson field devices using FDI technology.

Procedure

Download the software at Emerson.com/AMSDeviceConfigurator.

5.5.2 Add the FDI Package to AMS Device Configurator

Procedure

1. Start **AMS Device Configurator**.
2. At the top left, click the menu icon and select **Add Device Package**.

3. Browse to the downloaded FDI Package and select **Open**.
4. Select **Add**.
5. Select **Back**.

5.6 Configure transmitter using guided setup

The options available in the Guided Setup wizard include all items required for basic operation.

Procedure

1. Select **Configure** → **Guided Setup** → **Initial Setup**.
2. Select **Basic Setup** and follow the on-screen instructions.
3. Select **Verify Level** to check your level measurement.

5.7 Multidrop communication

Multidropping transmitters refers to the connection of several transmitters to a single communications transmission line. Communication between the host and the transmitters takes place digitally with the analog output of the transmitters deactivated.

5.7.1 Establish multidrop communication

In multidrop communication, each transmitter in the loop must have a unique HART address.

Procedure

1. Select **Configure** → **Manual Setup** → **Device Setup** → **HART**.
2. Select **Change Address**, and then type the HART address you want to use.
3. Ensure the **Multidrop** check box is selected.

5.8 Write protect a transmitter

The transmitter can be write protected to prevent unauthorized changes.

Procedure

1. Select **Overview** → **Device Information** → **Alarm and Security**.
2. Under ***Security***, select **Change Write Protection** and follow the on-screen instructions.

6 Operation and maintenance

6.1 Safety messages

Instructions and procedures in this section may require special precautions to ensure the safety of the personnel performing the operations. Information that potentially raises safety issues is indicated by a warning symbol (⚠). Refer to the following safety messages before performing an operation preceded by this symbol.

⚠ WARNING

Failure to follow safe installation and servicing guidelines could result in death or serious injury.

Ensure the transmitter is installed by qualified personnel and in accordance with applicable code of practice.

Inspection and maintenance of this equipment shall be carried out by suitably trained personnel, in accordance with the applicable standards and code of practice.

Use the equipment only as specified in this manual. Failure to do so may impair the protection provided by the equipment.

Repair, e.g. substitution of components, etc. may jeopardize safety and is under no circumstances allowed.

⚠ WARNING

Explosions could result in death or serious injury.

To prevent ignition of flammable or combustible atmospheres, disconnect power before servicing.

Before connecting a handheld communicator in an explosive atmosphere, ensure that the instruments are installed in accordance with intrinsically safe or non-incendive field wiring practices.

⚠ WARNING

Process leaks could result in death or serious injury.

Handle the transmitter carefully.

Install and tighten process connectors before applying pressure.

Do not attempt to loosen or remove process connectors while the transmitter is in service.

6.2 View measurement data

Procedure

1. Select **Overview**.

Figure 6-1: Overview Screen in AMS Device Configurator

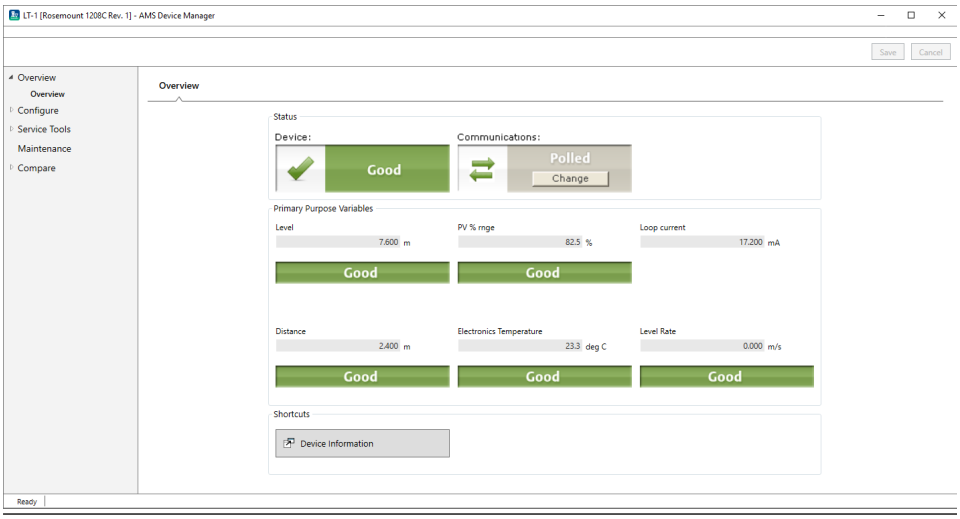

2. Optional: Select **Service Tools** → **Variables**.

6.2.1 Interpret measurement status

A “Good” or “Bad” status next to a value is an indication of the reliability or integrity of the data being received, not an indication of whether or not the value is within the configured upper or lower ranges. A value that triggers an alert, such as a high or low temperature indication, will change the overall status of the device, but the measurement might still be indicated as “Good” if the reliability of the data is good.

6.3 Check device status

The device reports diagnostic alerts when there is a device malfunction.

Procedure

1. Go to the **Overview** screen to view the overall device status.
2. If status is anything other than Good, select the button in the device status image to open a window with Active Alerts.

   Active Alerts can also be obtained via **Service Tools** → **Alerts**.

Related information

Diagnostic messages per NAMUR NE 107

6.3.1 Device status images

Table 6-1: Device Status Images in DD

Device status image	Category	Description	Action
	Good	No active alert.	N/A
	Failure	At least one Failure alert is active.	Click the **Troubleshoot** button to open a window with active alerts together with recommended actions.
	Function Check	At least one Function Check alert is active (and no Failure alerts).	Click the **Investigate** button to open a window with active alerts together with recommended actions.
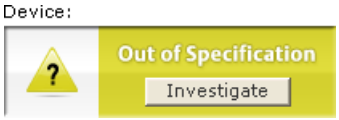	Out of Specification	At least one Out of Specification alert is active (and no Failure or Function Check alerts).	
	Maintenance Required	At least one Maintenance Required alert is active (and no Failure, Function Check, or Out of Specification alerts).	

7 Service and troubleshooting

7.1 Safety messages

Instructions and procedures in this section may require special precautions to ensure the safety of the personnel performing the operations. Information that potentially raises safety issues is indicated by a warning symbol (⚠). Refer to the following safety messages before performing an operation preceded by this symbol.

⚠ WARNING

Failure to follow safe installation and servicing guidelines could result in death or serious injury.

Ensure the transmitter is installed by qualified personnel and in accordance with applicable code of practice.

Inspection and maintenance of this equipment shall be carried out by suitably trained personnel, in accordance with the applicable standards and code of practice.

Use the equipment only as specified in this manual. Failure to do so may impair the protection provided by the equipment.

Repair, e.g. substitution of components, etc. may jeopardize safety and is under no circumstances allowed.

⚠ WARNING

Explosions could result in death or serious injury.

To prevent ignition of flammable or combustible atmospheres, disconnect power before servicing.

Before connecting a handheld communicator in an explosive atmosphere, ensure that the instruments are installed in accordance with intrinsically safe or non-incendive field wiring practices.

⚠ WARNING

Process leaks could result in death or serious injury.

Handle the transmitter carefully.

Install and tighten process connectors before applying pressure.

Do not attempt to loosen or remove process connectors while the transmitter is in service.

7.2 Diagnostic messages per NAMUR NE 107

7.2.1 Electronics failure, transmitter

Category Failure

Cause

An electronics error has occurred.

The device measurement reading is invalid.

Recommended actions

1. Restart the device.
2. If the condition persists, replace the device.

Related information

Restart the device

7.2.2 Electronics failure, sensor module

Category Failure

Cause

An electronics error has occurred.

The device measurement reading is invalid.

Recommended actions

1. Restart the device.
2. If the condition persists, replace the device.

Related information

Restart the device

7.2.3 Device memory failure

Category Failure

Cause

A device memory error has occurred.

The device measurement reading is invalid.

Recommended actions

1. Restore default settings, restart device, and reconfigure the device.
2. If the condition persists, replace the device.

Related information

Restore to default settings
Restart the device
Configure transmitter using guided setup

7.2.4 Radar signal failure

Category Failure

Cause

The received radar signal is invalid resulting in an invalid device measurement reading.

Recommended actions

1. Clean the antenna.
2. If the condition persists, replace the device.

7.2.5 Startup failure

Category Failure

Cause

Device repeatedly failed to start up with user configuration settings.

The device measurement reading is invalid.

Recommended actions

1. Check supply voltage is within range and restart device.
2. Restore default settings, restart device, and reconfigure the device.
3. If the condition persists, replace the device.

Related information

Power supply
Restore to default settings
Restart the device
Configure transmitter using guided setup

7.2.6 Software error

Category Failure

Cause

The software in the device encountered a problem and stopped running which may cause an invalid measurement reading.

In some cases, problems may be caused by temporary environmental conditions (e.g. electromagnetic interferences) and not observed again.

Recommended actions

1. Restart the device.
2. Restore default settings and reconfigure the device.
3. If the condition persists, replace the device.

Related information

Restore to default settings
Restart the device
Configure transmitter using guided setup

7.2.7 Level measurement lost

Category Failure

Cause

No valid level reading. Reasons may be multiple:

- No valid surface echo peak in the measuring range.
- Incorrect device configuration.

Recommended actions

1. Analyze the Echo Peaks for reason and check device configuration, especially thresholds.
2. Check device physical installation (for instance antenna contamination).
3. Consider increasing Measurement Recovery Time parameter for intermittent conditions.
4. Restart the device.
5. Restore default settings and reconfigure the device.
6. If the condition persists, replace the device.

Related information

Analyze the echo peaks
General threshold
Measurement recovery time
Restart the device
Restore to default settings
Configure transmitter using guided setup

7.2.8 Configuration error

Category Failure

Cause

The device has detected a configuration error. Reasons may be multiple.

Recommended actions

1. Click the **Details** button for more information.
2. Correct the parameter causing the error.

Volume configuration error

Cause

The volume cannot be calculated correctly with the current configuration.

Recommended actions

1. Check that the value pairs in the volume strapping table are entered in increasing order.
2. Check that the number of strapping points to use is correct.
3. If condition persists, restore default settings and reconfigure device.

Related information

Strapping table
Restore to default settings
Configure transmitter using guided setup

Volume flow configuration error

Cause

The Volume Flow cannot be calculated correctly with the current configuration.

Recommended actions

1. Check that the value pairs in the volume flow linearization table are entered in increasing order.
2. Check that the number of table points to use is correct.
3. If condition persists, restore default settings and reconfigure device.

Related information

Volume flow table
Restore to default settings
Configure transmitter using guided setup

Geometry configuration error

Cause

The configured tank geometry results in a too large level measuring range for this device.

Recommended actions

1. Check tank geometry configuration and reduce Reference Height.
2. If condition persists, restore default settings and reconfigure the device.

Related information

Reference height
Restore to default settings
Configure transmitter using guided setup

Primary variable configuration error

Cause

The Primary Variable selection is not supported.

Recommended actions

Change Primary Variable to variable supported by device.

Related information

Primary variable

Measurement correction configuration error

Cause

The factory measurement correction data is invalid.

Recommended actions

1. Restore default settings and reconfigure the device.
2. If the condition persists, replace the device.

Related information

Restore to default settings
Configure transmitter using guided setup

Threshold configuration error

Cause

The surface threshold configuration is incorrect.

Recommended actions in DD

1. In the threshold table, check that distance-threshold values are entered in increasing order.
2. Check that the number of threshold points to use is correct.
3. If condition persists, restore default settings and reconfigure the device.

Related information

General threshold
Restore to default settings
Configure transmitter using guided setup

Factory approval error

Cause

- The Sensor Module factory approval is missing.
- The Transmitter factory approval is missing.

Note
This error may also be set as a result of the startup failure. If both errors are present, then see the startup failure message.

Recommended actions

1. Restart the device.
2. Restore default settings and reconfigure device.
3. If the condition persists, replace the device.

Related information

Restart the device
Restore to default settings
Configure transmitter using guided setup

Factory calibration error

Cause

The factory calibration in the device is missing.

Note
This error may also be set as a result of the startup failure. If both errors are present, then see the startup failure message.

Recommended actions

Replace the device.

Analog out span configuration error

Cause

The span for the configured analog out range is too small.

Recommended actions

Increase analog out span by adjusting Upper or Lower Range Value.

Related information

Upper/lower range value

Analog out calibration error

Cause

Analog output calibration failed.

Recommended actions

1. Try calibrating the analog output again.
2. If the condition persists, replace the device.

Related information

Calibrate analog out

Engineering unit configuration error

Cause

One of the configured engineering units is not supported by the device.

Recommended actions

1. Check unit configuration.
2. If condition persists, restore default settings and reconfigure device.

Related information

Units
Restore to default settings
Configure transmitter using guided setup

7.2.9 Simulation/test active

Category Function Check

Cause

The device is in simulation or test mode and is not reporting actual information.

Recommended actions

1. If this behavior is not desired, stop simulation or test mode.
2. If the condition persists, restart the device.

Related information

Use the simulation mode
Restart the device

7.2.10 Electronics temperature out of limits

Category Out of Specification

Cause

The temperature of the electronics board has exceeded the transmitter's operating range.

Recommended actions

1. Verify ambient temperature is within the operating range.
2. Remote mount the transmitter away from the process and environmental conditions.

Related information

Ambient temperature

7.2.11 Linearized variable out of range

Category Maintenance Required

Cause

The level measurement is outside the configured range for volume or volume flow, or both.

Accuracy of volume/volume flow measurement may be degraded.

Recommended actions

1. If volume strapping table is used, make sure level values within operating range are included.
2. If volume flow linearization table is used, make sure input variable values within operating range are included.

Related information

Strapping table
Volume flow table

7.3 Troubleshooting guides

If there is a malfunction despite the absence of alerts, follow the procedures described in the appropriate troubleshooting guide. Under each of the symptoms, specific suggestions for solving problems are offered.

7.3.1 Troubleshooting incorrect level readings

Reported level is too high or low

Figure 7-1: Symptom

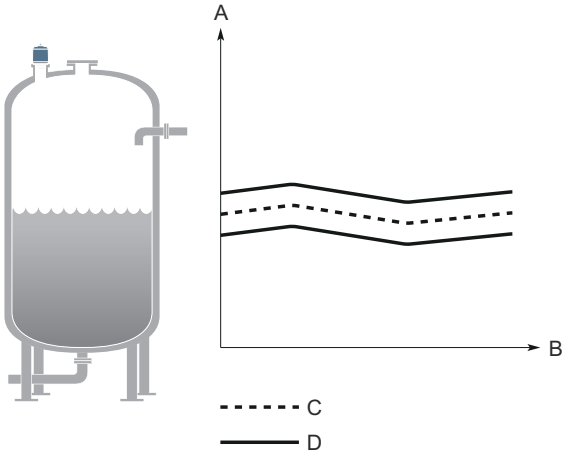

A. Level
B. Time
C. Actual level
D. Reported level

Possible cause

Incorrect tank geometry configuration.

Recommended actions

- Verify the tank geometry parameters are configured correctly (especially the Reference Height).
- Analyze the Echo Peaks and check General Threshold.
- Restore default settings and reconfigure the device.

Related information

Reference height
Analyze the echo peaks
Adjust the general threshold
Restore to default settings

Level is stuck in measuring range

Figure 7-2: Symptom

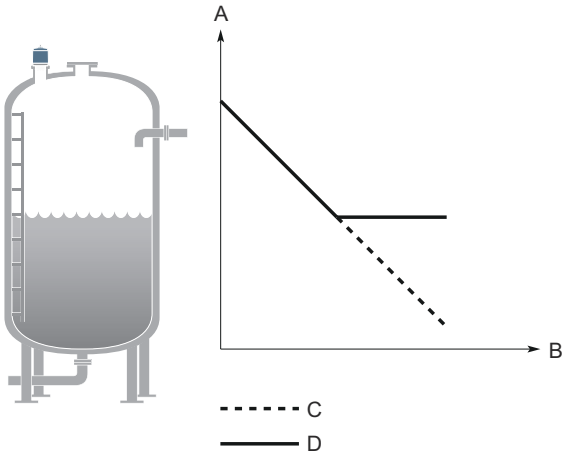

A. Level
B. Time
C. Actual level
D. Reported level

Possible cause

Disturbing object in the tank.

Recommended actions

- Analyze the Echo Peaks and check General Threshold.
- Remove the disturbing object.
- Put an inclined metal plate on top of the disturbing object.
- Move the transmitter to another position.

Related information

Analyze the echo peaks
Adjust the general threshold
Mounting position

Level is stuck in full tank

Figure 7-3: Symptom

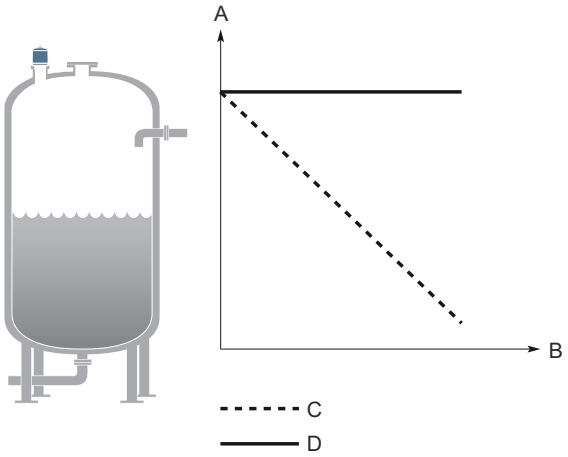

A. Level
B. Time
C. Actual level
D. Reported level

Possible cause

Disturbing object near the antenna.

Recommended actions

- Analyze the Echo Peaks and check General Threshold.
- Increase the Upper Null Zone.
- Remove the disturbing object.
- Move the transmitter to another position.

Possible cause

Product build-up on the antenna.

Recommended actions

- Clean the antenna.

Related information

Analyze the echo peaks
Adjust the general threshold
Change the upper null zone
Mounting position

Level value drops when close to antenna

Symptom

Level value drops to a lower value when product surface is close to antenna.

Figure 7-4: Symptom

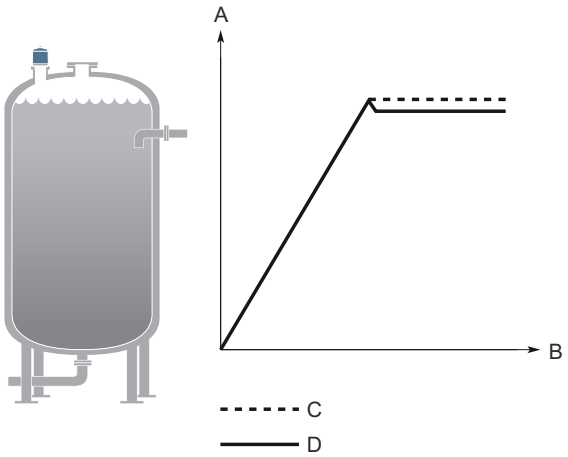

A. Level
B. Time
C. Actual level
D. Reported level

Possible cause

Product surface is within the Upper Null Zone and a disturbance echo is interpreted as the product surface.

Recommended actions

- Check the setting of the Upper Null Zone.

Related information

Change the upper null zone

Measured level fluctuates

Figure 7-5: Symptom

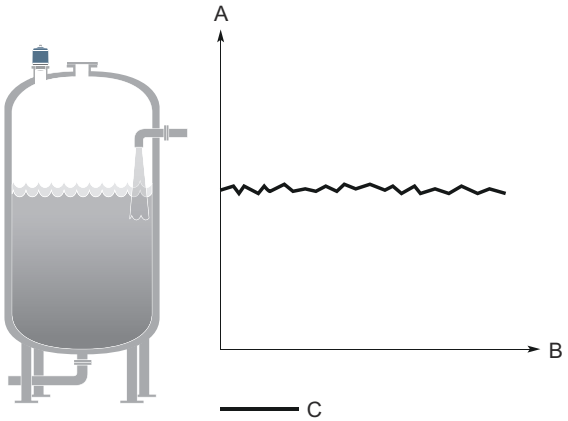

A. Level
B. Time
C. Reported level

Possible cause

Excessive foaming or turbulence.

Recommended actions

- Under turbulent conditions with low level rates, consider increasing the Damping value.

Related information

Damping value

Measured level is occasionally unstable

Figure 7-6: Symptom

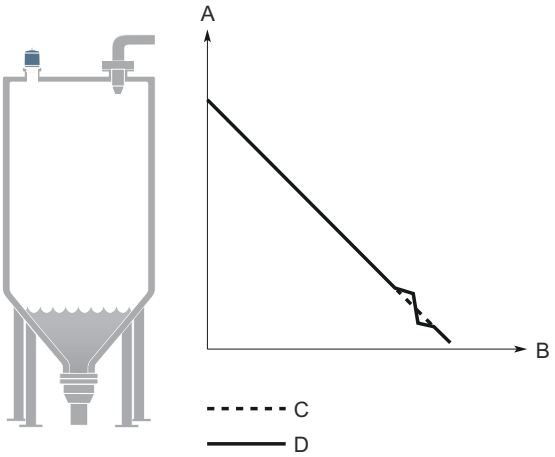

A. Level
B. Time
C. Actual level
D. Reported level

Possible cause

The product surface is close to a suppressed false echo.

Recommended actions

- If possible, remove the disturbing object.

Related information

Analyze the echo peaks

Lagging of measured level

Symptom

Measured level lags during rapid level changes.

Figure 7-7: Symptom

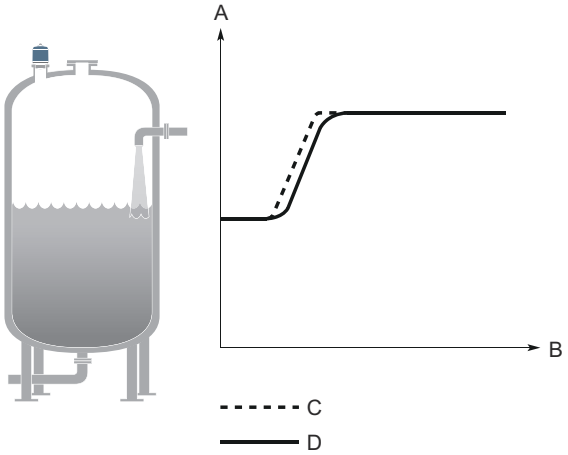

A. Level
B. Time
C. Actual level
D. Reported level

Possible cause

Damping value is set too high.

Recommended actions

- If there is a problem with lag during rapid level changes, consider decreasing the Damping value.

Related information

Damping value

Incorrect level at 100% (20 mA)

Symptom

Measured level is correct at 0% (4 mA) but incorrect at 100% (20 mA).

Figure 7-8: Symptom

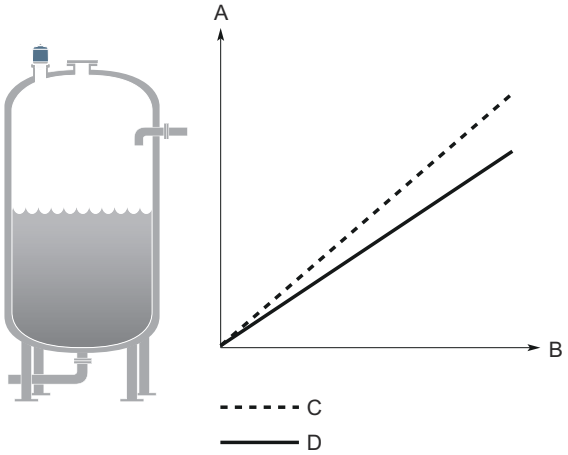

A. Level
B. Time
C. Actual level
D. Reported level

Possible cause

Upper Range Value is not set correctly.

Recommended actions

- Check that the Upper Range Value matches the 100% (20 mA) level in the tank.

Related information

Upper/lower range value

Incorrect level when product surface is above 50%

Symptom

The reported level is incorrect when the product surface is above the 50% level.

Figure 7-9: Symptom

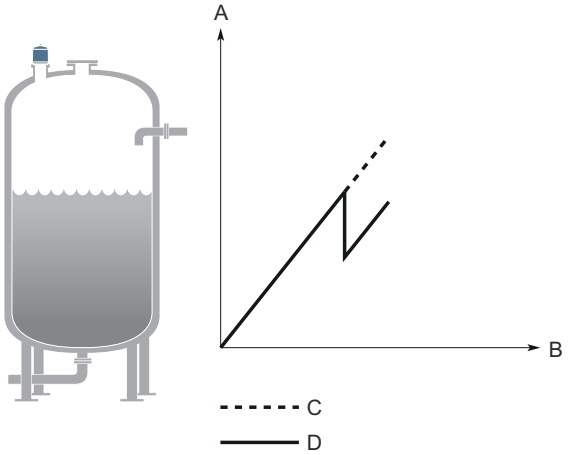

A. Level
B. Time
C. Actual level
D. Reported level

Possible cause

A strong double bounce echo is interpreted as the product surface.

Recommended actions

- Move the transmitter to another position.

Related information

Mounting position

Dropping of level close to tank bottom

Symptom

Measured value drops to zero level in the tank bottom region.

Figure 7-10: Symptom

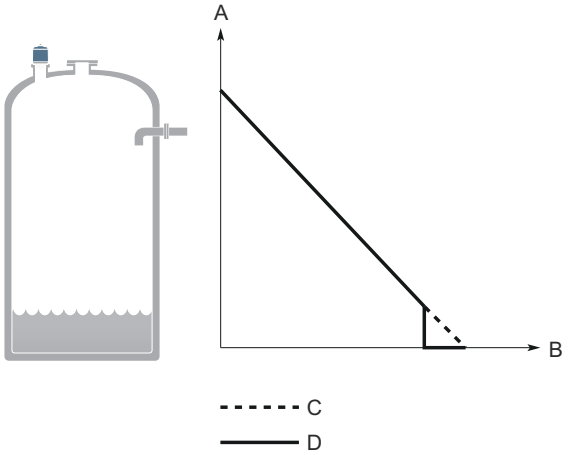

A. Level
B. Time
C. Actual level
D. Reported level

Possible cause

Transmitter has locked on a strong tank bottom echo.

Recommended actions

- Verify the Reference Height is configured correctly.

Related information

Reference height

Level measurement lost in a manway cover installation

Symptom

The transmitter reports "Level measurement lost" when opening/closing the manway cover.

Figure 7-11: Symptom

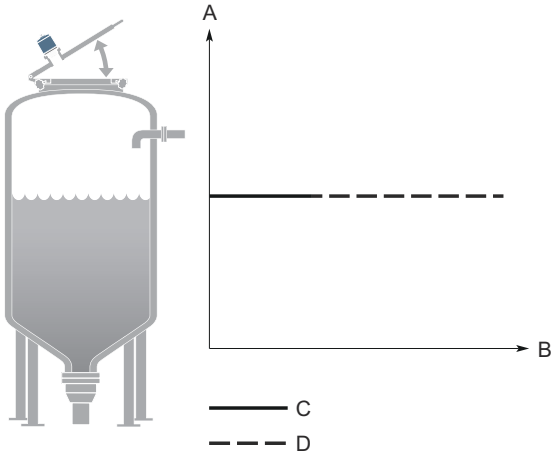

A. Level
B. Time
C. Actual level
D. Level measurement lost

Possible cause

If mounted on a manway cover, the transmitter may lock on a disturbance echo and report this as surface level when the cover is opened. After closing the cover, the echo is lost and the transmitter reports "Level measurement lost".

Recommended actions

- Before opening the manway cover, disconnect power to the transmitter.
- After closing, restart the device.
- Move the transmitter to another position.

Related information

Mounting position
Restart the device

Level measurement is lost in an empty tank

Symptom

The transmitter reports "Level measurement lost" in an empty tank after closing the side manway door.

Figure 7-12: Symptom

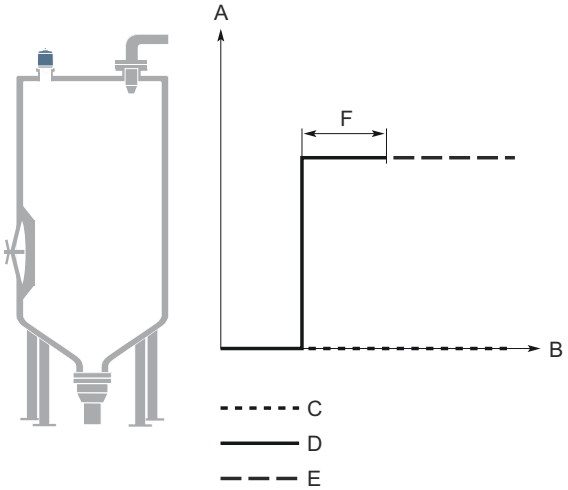

A. Level
B. Time
C. Actual level
D. Reported level
E. Level measurement lost
F. Manway door open

Possible cause

When the manway door is opened inward, it generates a disturbance echo which is interpreted as the product surface echo. After closing the door, the echo is lost and the transmitter reports "Level measurement lost". The message is cleared when start filling the tank.

Recommended actions

- Before opening the manway door, disconnect power to the transmitter.
- After closing, restart the device.
- Move the transmitter to another position.

Related information

Mounting position
Restart the device

Alarm mode close to tank bottom

Symptom

When the product surface is near the sloped tank bottom, the transmitter enters alarm mode.

Figure 7-13: Symptom

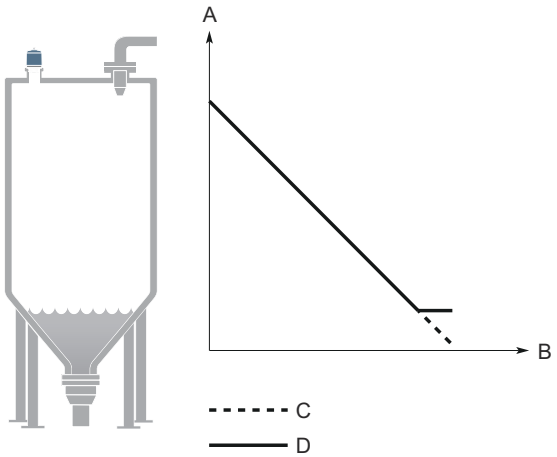

A. Level
B. Time
C. Actual level
D. Reported level

Possible cause

Reduction of projected surface area close to sloping tank bottom.

Recommended actions

- Verify the tank geometry parameters are configured correctly (especially the Reference Height and Bottom Offset).

Related information

Reference height
Bottom offset

7.3.2 Troubleshooting the 4-20 mA/HART output

Device milliamp reading is zero

Recommended actions

1. Verify power is applied to signal terminals.
2. Verify power supply voltage is adequate at signal terminals.

Related information

Power supply

Device milliamp reading is too low or high

Recommended actions

1. Verify level.
2. Check the settings of the 4-20 mA range values.
3. Verify output is not in alarm condition.
4. Check that power wires are connected to the correct signal terminals.
5. Perform Calibrate Analog Out.

Related information

Upper/lower range value
Alarm mode
Calibrate analog out

Milliamp reading is erratic

Recommended actions

1. Verify power supply voltage is adequate at signal terminals.
2. Check for external electrical interference.
3. Under turbulent conditions with low level rates, consider increasing the Damping value.

Related information

Power supply
Damping value

Device will not respond to changes in level

Recommended actions

- Verify level is between the 4 and 20 mA set points.
- Verify output is not in alarm condition.
- Verify device is not in loop test or simulation mode.

Related information

Upper/lower range value
Alarm mode
Check device status

There is no HART communication (lost device communication)

Recommended actions

1. Verify power supply voltage is adequate at signal terminals.
2. Check load resistance (250 ohms minimum).
3. Check if device is at an alternate HART address.
4. Check current analog output value to verify that device hardware works.

Related information

Power supply
HART/polling address

7.4 Managing disturbance echoes

There are two general methods for managing disturbance echoes:

- Set general threshold to filter out weak disturbance echoes and noise.
- Increase the Upper Null Zone to block out disturbance echoes at the top of the tank.

7.4.1 General threshold

The general threshold is used to filter out noise and disturbing echoes from the product surface echo. The transmitter uses certain criteria to decide which type of echo peak that is detected. Only echoes above the general threshold might be considered the product surface.

Figure 7-14: Threshold Principle

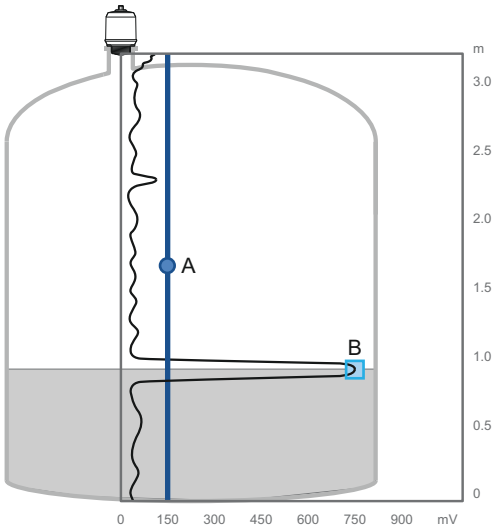

A. General threshold
B. Product surface echo

Adjust the general threshold

If necessary, the general threshold value can be increased if a disturbance echo is interpreted as the product surface. Alternatively, a lower threshold may be required to handle weak surface echoes (e.g. due to excessive foaming or turbulence).

Prerequisites

The general threshold is set at factory for optimum performance and should not normally need an adjustment.

Before changing the factory default value, study the position and amplitude of the different echo peaks.

Procedure

1. Select **Service Tools** → **Echo Tuning** → **Thresholds**.
2. Select **Set General Threshold** and follow the on-screen instructions.
   Alternatively, the threshold can be split into up to 10 segments.

Related information

Analyze the echo peaks

7.4.2 Change the upper null zone

The Upper Null Zone defines a zone close to the transmitter where echoes are ignored. This zone can be extended to block out disturbing echoes at the top of the tank.

Prerequisites

Note
Make sure the Upper Range Value (100%/20 mA) value is below the Upper Null Zone. Measurements are not performed within the Upper Null Zone.

Procedure

1. Identify desired Upper Null Zone by analyzing the echo peaks.
   a) Select **Service Tools** → **Echo Tuning** → **Echo Peaks**.
   b) View the echo peaks to find out if there are disturbing echoes close to tank top.
2. Set the desired Upper Null Zone value.
   a) Select **Configure** → **Manual Setup** → **Level Setup** → **Advanced**.
   b) Enter the desired Upper Null Zone value.

Related information

Analyze the echo peaks
Upper null zone

7.5 Service and troubleshooting tools

7.5.1 Analyze the echo peaks

Measurement problems can be understood by studying the position and amplitude of the different peaks.

Procedure

Select **Service Tools** → **Echo Tuning** → **Echo Peaks**.

Echo peaks

See Table 7-1 for a list of possible echo peaks.

Table 7-1: Echo Peak Types

Type	Description
Surface	Echo tracked as the current surface echo
Unknown	Echo identified as unknown (can be a surface candidate)
Irrelevant	Echoes that are identified but suppressed by the device
Tank bottom echo	Echo considered as an echo from the tank bottom

7.5.2 Perform an analog loop test

During a loop test, the transmitter outputs a fixed value (4 mA, 20 mA, or user-selected value).

The loop test command verifies the output of the transmitter, the integrity of the loop, and the operations of any recorders or similar devices installed in the loop. A loop test can also be used to determine the need for an analog output calibration.

Procedure

1. Select **Service Tools** → **Simulate**.
2. Under ***Analog Out***, select **Loop test**, and then follow the on-screen instructions.
3. Measure the loop current.

Postrequisites

Select **End** or **Cancel** to exit loop test.

Related information

Calibrate analog out
Simulation/test active

7.5.3 Calibrate analog out

Use this function to calibrate the analog output by comparing the actual output current with the nominal 4 mA and 20 mA currents. Calibration is done at factory and the analog output does not normally need to be recalibrated.

Procedure

1. Select **Service Tools** → **Maintenance** → **Routine Maintenance**.
2. Select **D/A trim** and follow the on-screen instructions.

7.5.4 Restart the device

To restart the device electronics:

Procedure

1. Select **Service Tools** → **Maintenance** → **Reset/Restore**.
2. Select **Restart Device** and follow the on-screen instructions.

7.5.5 Restore to default settings

This function restores the transmitter to default settings (user configuration is overwritten).

Procedure

1. Select **Service Tools** → **Maintenance** → **Reset/Restore**.
2. Select **Restore Default Settings** and follow the on-screen instructions.

7.5.6 Use the simulation mode

This function can be used to simulate measurements.

Procedure

1. Select **Service Tools** → **Simulate**.
2. Under ***Simulate Measurement Values***, select **Simulate Level** and follow the on-screen instructions.

Related information

Simulation/test active

7.6 Service support

To expedite the return process, refer to Emerson.com and contact the nearest Emerson representative.

⚠ CAUTION

Individuals who handle products exposed to a hazardous substance can avoid injury if they are informed of and understand the hazard. Returned products must include a copy of the required Safety Data Sheet (SDS) for each substance.

Emerson representatives will explain the additional information and procedures necessary to return goods exposed to hazardous substances.

A Specifications and reference data

A.1 Performance specifications

A.1.1 General

Reference conditions

- Measurement target: Stationary metal plate, no disturbing objects
- Temperature: 59 to 77 °F (15 to 25 °C)
- Ambient pressure: 14 to 15 psi (960 to1060 mbar)
- Relative humidity: 25-75%
- Damping: Default value, 2 s

Instrument accuracy (under reference conditions)

±0.08 in. (±2 mm)[(1)]

Repeatability

±0.04 in. (±1 mm)

Ambient temperature effect

±0.04 in. (±1 mm)/10 K

Sensor update rate

1 update per second

Maximum level rate

200 mm/s

A.1.2 Measuring range

Maximum measuring range

49 ft. (15 m)[(2)]

(1) *Refers to inaccuracy according to IEC 60770-1 when excluding installation dependent offset. See the IEC 60770-1 standard for a definition of radar specific performance parameters and if applicable corresponding test procedures.*

(2) *The measuring range is limited to 33 ft. (10 m) for oil-based media (dielectric constant < 10). Also note that a combination of adverse process conditions, such as heavy turbulence, foam, and condensation, together with products with poor reflection may affect the measuring range.*

Accuracy over measuring range

Figure A-1 illustrates the accuracy over measuring range at reference conditions.

Figure A-1: Accuracy Over Measuring Range

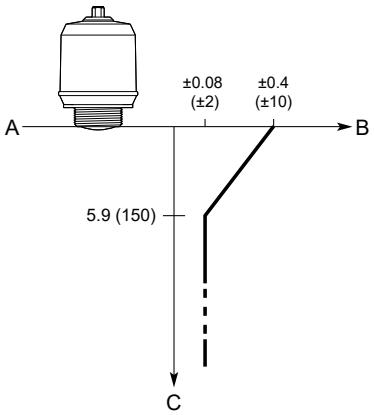

A. Device Reference Point
B. Accuracy in inches (millimeters)
C. Distance in inches (millimeters)

A.1.3 Environment

Vibration resistance

2 g at 10-1000 Hz according to IEC 61298-3, level “field with general application”

Electromagnetic compatibility (EMC)

- EMC Directive (2014/30/EU): EN 61326-1
- NAMUR recommendations NE21

Pressure Equipment Directive (PED)

Complies with 2014/68/EU article 4.3

Radio approvals

- Radio Equipment Directive (2014/53/EU) and Radio Equipment Regulations (S.I. 2017/1206):
  - ETSI EN 302 372
  - ETSI EN 302 729
  - EN 62479
- Part 15 of the FCC Rules
- Industry Canada RSS 211

Related information

Product certifications

A.2 Functional specifications

A.2.1 General

Field of application

Continuous measurement of level and open channel flow.

Minimum dielectric constant

2

Measurement principle

Frequency Modulated Continuous Wave (FMCW)

Frequency range

77 to 81 GHz

Maximum output power

3 dBm (2 mW)

Internal power consumption

< 0.8 W in normal operation

Humidity

0 - 100% relative humidity, non-condensing

Turn-on time

< 60 s[(3)]

A.2.2 4-20 mA HART®

Output

Two-wire, 4-20 mA. Digital process variable is superimposed on 4-20 mA signal, and available to any host that conforms to the HART protocol. The digital HART® signal can be used in multidrop mode.

HART universal revision

7

(3) *Time from when power is applied to the transmitter until performance is within specifications.*

Analog signal on alarm

The transmitter automatically and continuously performs self-diagnostic routines. If a failure or a measurement error is detected, the analog signal will be driven offscale to alert the user. High or low failure mode is user-configurable.

Table A-1: Signal on Alarm

Standard	High	Low
Rosemount standard	≥ 21.75 mA	≤ 3.75 mA
NAMUR NE43	≥ 21.5 mA	≤ 3.6 mA

Analog saturation levels

The transmitter will continue to set a current that corresponds to the measurement until reaching the associated saturation limit (and then freeze).

Table A-2: Saturation Levels

Standard	High	Low
Rosemount standard	20.8 mA	3.9 mA
NAMUR NE43	20.5 mA	3.8 mA

A.2.3 Configuration

Damping

User selectable (default is 2 s, minimum is 0 s)

Output units

- Level and distance: ft., in., m, cm, mm
- Level rate: ft/s, in./min, in./s, m/h, m/s
- Volume: ft^3, $in.^3$, yd^3, US gal, imperial gal, barrel (bbl), m^3, l
- Volume flow: US gal/h, m^3/h
- Temperature: °F, °C
- Signal strength: mV

Output variables

Variable	4-20 mA	Digital output
Level	✓	✓
Distance (ullage)	✓	✓
Volume	✓	✓
Volume flow	✓	✓
Electronics temperature	N/A	✓
Level rate	N/A	✓
Signal strength	N/A	✓

Volume flow calculations

- Linearization table
- Parshall flume
- Khafagi-Venturi flume

A.2.4 Process pressure

-15 to 43.5 psig (-1 to 3 bar)

Note
The PE100 flanges must be used only in non-pressurized applications.

A.2.5 Temperature limits

Process temperature

-40 to 176 °F (-40 to 80 °C)

Ambient temperature

-40 to 176 °F (-40 to 80 °C)

Storage temperature

-40 °F to 194 °F (-40 °C to 90 °C)

A.3 Physical specifications

A.3.1 Material selection

Emerson provides a variety of Rosemount products with various product options and configurations, including materials of construction that can be expected to perform well in a wide range of applications. The Rosemount product information presented is intended as a guide for the purchaser to make an appropriate selection for the application. It is the purchaser's sole responsibility to make a careful analysis of all process parameters (such as all chemical components, temperature, pressure, flow rate, abrasives, contaminants, etc.), when specifying product, materials, options, and components for the particular application. Emerson is not in a position to evaluate or guarantee the compatibility of the process fluid or other process parameters with the product, options, configuration, or materials of construction selected.

A.3.2 Housing and enclosure

Process connection

NPT 1½-in. or ISO 228/1-G1½-in. thread with a choice of different brackets, adapters, and flanges

Materials

- Transmitter housing: Polyvinylidene fluoride (PVDF)
- M12 housing: Zinc die-cast nickel-plated
- M12 contact body: Polyamide (PA)

Transmitter weight

0.8 lb (0.35 kg)

Ingress protection

Enclosures meet NEMA® Type 4X/6P, IP66, and IP68 (33 ft. [10 m] for 1000 hours[4]) when properly installed.

Impact protection

IK07 (4 J impact test)

A.3.3 Mounting bracket

Materials

- Bracket: Stainless steel 316L
- Nut: PVDF

A.3.4 Flanges

Materials

- Polyethylene PE100
- Stainless steel 316/316L
- Stainless steel 1.4404

A.3.5 Threaded adapters

Materials

Stainless steel 316/316L/1.4404

A.3.6 Material exposed to tank atmosphere

- Antenna and housing: PVDF
- Gasket: EPDM or FKM GLT
- Flange: PE100, 316/316L, or 1.4404
- Threaded adapter: 316/316L/1.4404

(4) Verified with selection of cables from Weidmuller; for other cable selections IP68 conditions may vary.

A.4 Dimensional drawings

Related information

Type 1 Drawing

A.4.1 Transmitter

Figure A-2: Rosemount 1208C

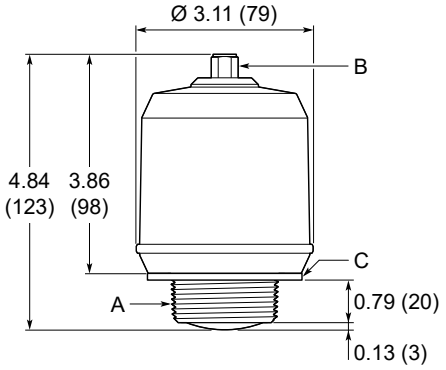

A. NPT 1½-in. or ISO 228/1-G1½-in. thread
B. M12 male connector (A-coded)
C. Gasket for G threaded version

Dimensions are in inches (millimeters).

A.4.2 Threaded adapter

Figure A-3: 2-in. NPT Threaded Adapter

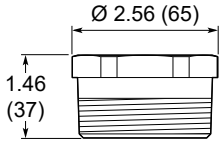

Dimensions are in inches (millimeters).

A.4.3 Mounting brackets

Figure A-4: Standard Version

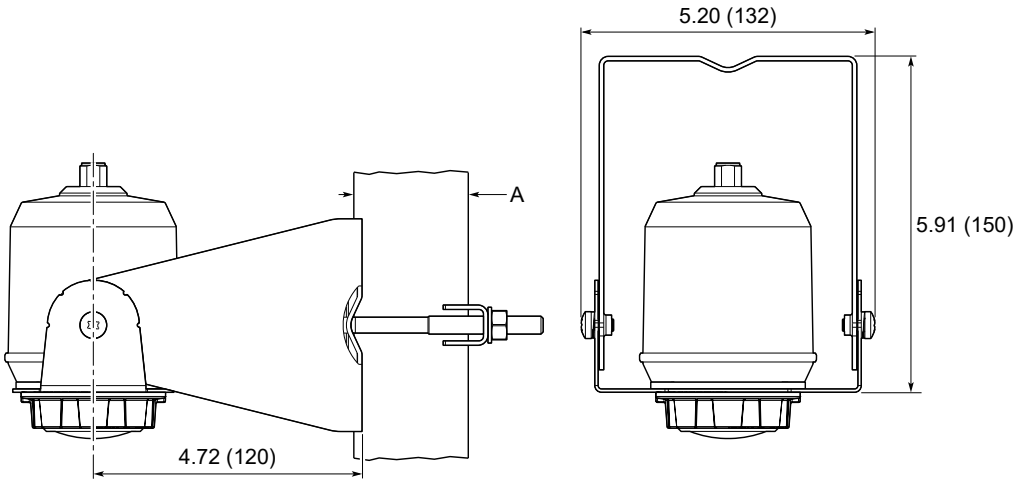

A. For 1- to 2-in. nominal pipe sizes; 2-in. pipe is the recommended size

Dimensions are in inches (millimeters).

Figure A-5: Extendable Version

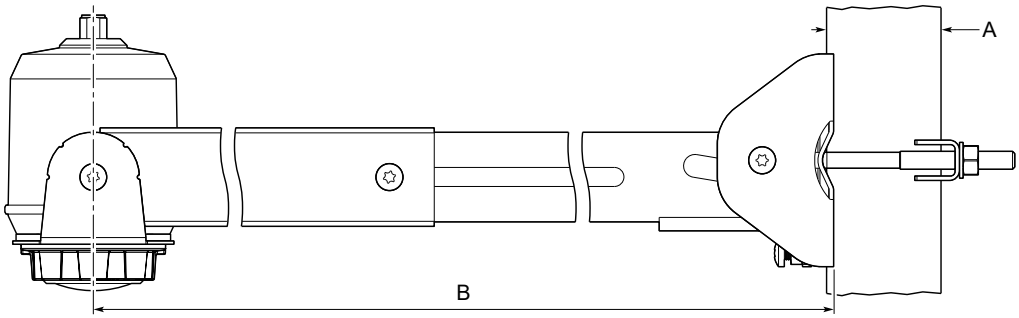

A. For 1- to 2-in. nominal pipe sizes; 2-in. pipe is the recommended size
B. Adjustable length: 17.5 to 28.9 in. (445 to 735 mm)

Bracket hole pattern

Figure A-6: Hole Pattern for Wall Mounting

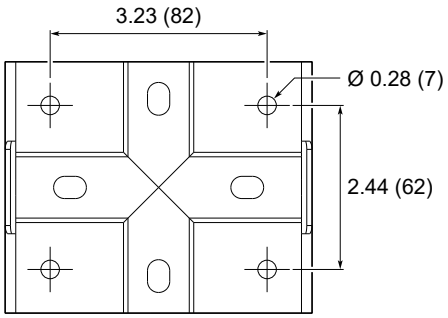

Dimensions are in inches (millimeters).

B Configuration parameters

B.1 Menu tree

Figure B-1: DD Menu Tree

Overview	Status	
	Primary Purpose Variables	
	Device Information	Identification
		Revisions
		Alarm and Security
Configure	Guided Setup	Basic Setup
		Verify Level
	Manual Setup > Device Setup	HART
		Units
		Analog Output
		Security
		Device Information
	Manual Setup > Level Setup	Geometry
		Volume Flow
		Volume
		Advanced
Service Tools	Alerts	
	Variables	Mapped Variables
		All Variables
	Maintenance	Routine Maintenance
		Reset/Restore
	Echo Tuning	Thresholds
		Echo Peaks
	Simulate	Simulate Measurement Values
		Analog Out > Loop test

B.2 Device setup

B.2.1 HART protocol

HART/polling address

The address range is 0 to 63. The transmitter operates in either standard mode with a 4–20 mA output signal or in multidrop. When the transmitter is in multi-drop mode, the current output is fixed to 4 mA.

Variable mapping

Up to four device variables can be assigned for the HART protocol. The transmitter outputs a 4-20 mA signal proportional to the primary variable. Additional variables are available through the HART digital signal.

Related information

Output variables

Damping value

This parameter defines how fast the transmitter reacts to a change of the level value (step response). The default value is 2 seconds.

A high value makes the level reading steady, while a low value allows the transmitter to respond to rapid level changes (but the presented level value may be less steady).

B.2.2 Units

The units for length, volume flow, volume, temperature, and level rates are selectable. All configuration parameters and device variables will be expressed in these units.

Related information

Output units

B.2.3 Analog output

The output source (primary variable), range values, and alarm mode are specified for the analog output.

Primary variable

Select the desired device variable to use for the analog output.

Upper/lower range value

Enter the range values that correspond to the analog output values 4 and 20 mA. The transmitter will drive the output to saturation mode if a measured value goes outside the 4-20 mA range values.

Note
The 20 mA point should be set below the reduced accuracy zone at the top of the tank.

Figure B-2: Example of Range Value Settings

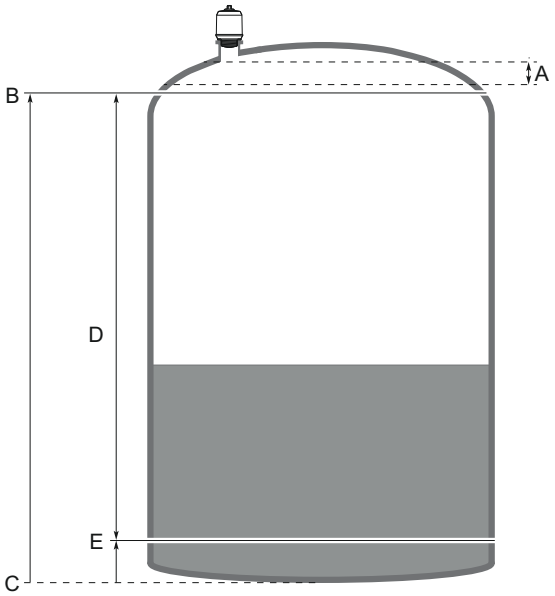

A. Reduced accuracy zone
B. 100% (20 mA)
C. Zero Level
D. Level measurement range 0-100%
E. 0% (4 mA)

Related information

Accuracy over measuring range

Alarm mode

The transmitter automatically and continuously performs self-diagnostic routines. If a failure or a measurement error is detected, the transmitter drives the output to selected alarm limit (high or low).

High/low alarm value

The high/low alarm current for the analog output when the device enters the alarm mode.

Related information

Analog signal on alarm

High/low saturation value

The device will continue to set a current that corresponds with the measurement until reaching the upper/lower limit (and then freeze).

Related information

Analog saturation levels

B.2.4 Security

Write protection

The transmitter can be write protected to prevent unauthorized changes.

B.2.5 Device information

Tag

Identifier of up to 8 characters for the device used by host system. The tag is typically a reference number, location, or duty description.

Long tag

Identifier of up to 32 characters for the device used by host system. It is recommended to enter both a short and a long tag (they may be the same).

Date

The date field can be used for any purpose, for example to save the date of the last configuration change.

Descriptor

The 16-character descriptor field can be used for any purpose.

Message

The 32-character message field can be used for any purpose, such as providing details of the last configuration change.

B.3 Level setup

B.3.1 Geometry

Reference height

Distance between the Device Reference Point and Zero Level.

Figure B-3: Reference Height

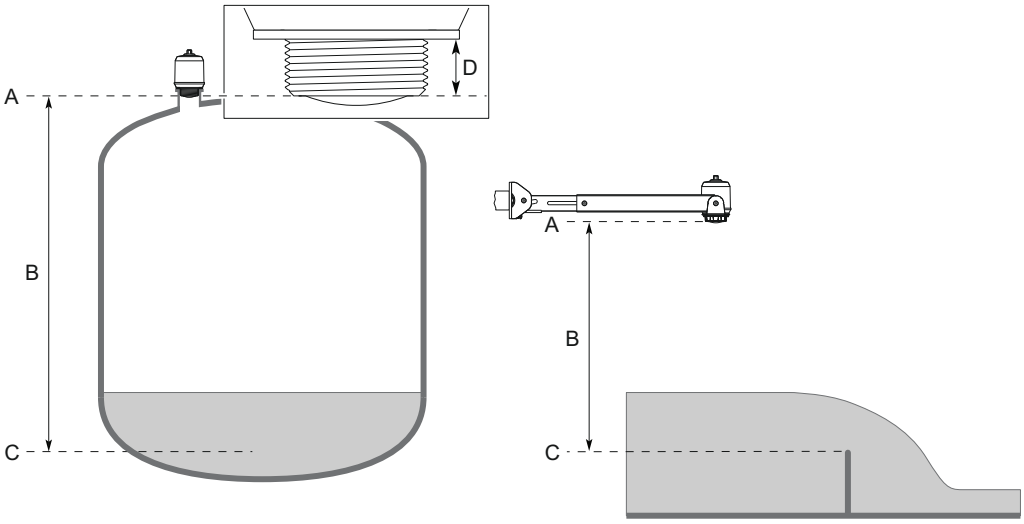

A. Device Reference Point
B. Reference Height
C. Zero Level
D. 0.79 in. (20 mm)

Ensure the Reference Height is set as accurate as possible. The transmitter measures the distance to the product surface and subtracts this value from the Reference Height to determine the level.

Bottom offset

The Bottom Offset is defined as the distance between Zero Level and the tank bottom. The default value is zero.

If the Zero Level is not located at the tank bottom, then enter a Bottom Offset. It is needed for the transmitter to know the position of the tank bottom.

Figure B-4: Bottom Offset

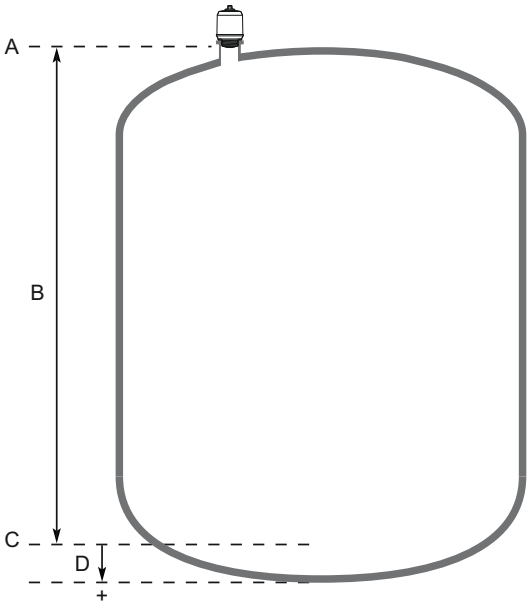

A. Device Reference Point
B. Reference Height
C. Zero Level
D. Bottom Offset

Show negative level as zero

When this setting is selected and the product surface is at or below Zero Level, the level measurement output will be zero.

B.3.2 Volume flow

Volume flow calculation method

Select the preferred volume flow calculation method. The are three options to choose from:

- Linearization table
- Parshall flume
- Khafagi-Venturi flume

Volume flow table

The volume flow table is used to convert the measured level into a volume flow rate. Up to 30 level-volume flow pairs can be entered. The level points must be entered in increasing order.

Volume flow formula

Parshall Flume

The volume flow is calculated from the formula:

$Q = K \times H^n$

Table B-1: Parshall Flume Parameters

Parameter	Description
Q	Calculated volume flow in m^3/h
H	Measured level in m
Constant K	Flume specific factor K
Exponent n	Flume specific factor n
Maximum level value	Flume maximum Level (weir height)

Khafagi-Venturi Flume

The volume flow is calculated from the formula:

$Q = K \times H^{1.5}$

Table B-2: Khafagi-Venturi Flume Parameters

Parameter	Description
Q	Calculated volume flow in m^3/h
H	Measured level in m
Constant K	Flume specific factor K
Maximum level value	Flume maximum Level (weir height)

B.3.3 Volume

Volume calculation method

The volume measurement can be calculated from a strapping table.

Strapping table

Strapping table requires entering level-volume pairs in a table (maximum 30 points). Use most of the strapping points in regions where the tank shape is non-linear. Starting at the bottom of the tank, for each new point, enter the total volume up to the specified level value.

B.3.4 Advanced

Calibration offset

Difference between surface distance measured by transmitter and the same distance measured by, for example, hand-dipping with a measurement tape. A positive Calibration Offset value will increase the presented level value.

Figure B-5: Calibration Offset

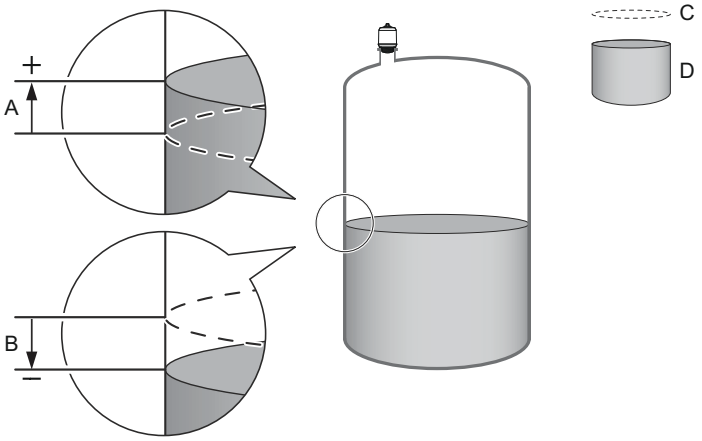

A. Positive Calibration Offset value
B. Negative Calibration Offset value
C. Reported level
D. Actual level

Upper null zone

The Upper Null Zone defines how close to the device's reference point a level value is accepted. You can extend this value to block out disturbing echoes close to the antenna, for example from the tank nozzle.

Note
Make sure the 20 mA value is below the Upper Null Zone. Measurements are not performed within the Upper Null Zone (UNZ).

Figure B-6: Upper Null Zone

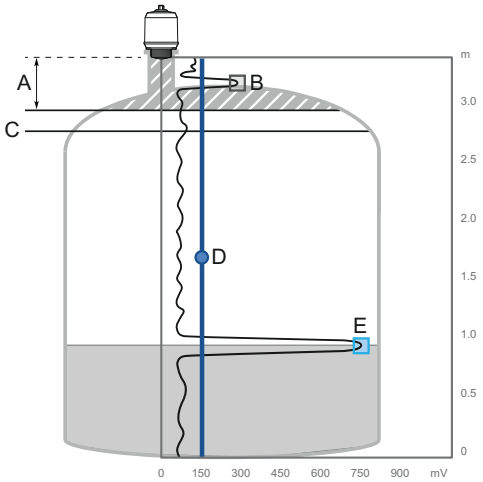

A. Upper Null Zone
B. Disturbance echo
C. 100% (20 mA)
D. General threshold
E. Product surface echo

Related information

Change the upper null zone

Measurement recovery time

The Measurement Recovery Time (Echo Timeout) parameter controls the maximum time from when measurement is lost (e.g. due to process conditions such as foam or turbulence) until it is annunciated. If measurement is recovered within the time specified by this parameter, then it will not be annunciated.

00809-0200-7062
Rev. AA
2023

For more information: **Emerson.com**

©2023 Emerson. All rights reserved.

Emerson Terms and Conditions of Sale are available upon request. The Emerson logo is a trademark and service mark of Emerson Electric Co. Rosemount is a mark of one of the Emerson family of companies. All other marks are the property of their respective owners.

ROSEMOUNT™

EMERSON™