A Specifications and reference data

A.1 Performance specifications

A.1.1 General

Reference conditions

- Measurement target: Stationary metal plate, no disturbing objects
- Antenna: Process seal
- Temperature: 59 to 77 °F (15 to 25 °C)
- Ambient pressure: 14 to 15 psi (960 to1060 mbar)
- Relative humidity: 25-75%
- Damping: Default value, 2 s

Instrument accuracy (under reference conditions)

±0.04 in. (±1 mm)[(1)]

Repeatability

±0.02 in. (±0.5 mm)

Ambient temperature effect

±0.04 in. (±1 mm)/10 K

Sensor update rate

- Minimum 1 Hz (with 15 Vdc at 4 mA; 12 Vdc at 22.5 mA)
- Minimum 0.5 Hz (with 13 Vdc at 4 mA)

Maximum level rate

40 mm/s as default, adjustable up to 200 mm/s

(1) *Refers to inaccuracy according to IEC 60770-1 when excluding installation dependent offset. See the IEC 60770-1 standard for a definition of radar specific performance parameters and if applicable corresponding test procedures.*

A.1.2 Measuring range

Table A-1: Maximum Measuring Range, ft. (m)

Antenna type	Basic Process Control System (BPCS)	Safety Instrumented Systems (SIS)
Process seal antenna	98 (30)	49 (15)
Lens antenna	49 (15)	49 (15)
ATAP lens antenna	98 (30)	49 (15)

Note that a combination of adverse process conditions, such as heavy turbulence, foam, and condensation, together with products with poor reflection may affect the measuring range.

Accuracy over measuring range

Figure A-1 illustrates the accuracy over measuring range at reference conditions.

Figure A-1: Accuracy Over Measuring Range

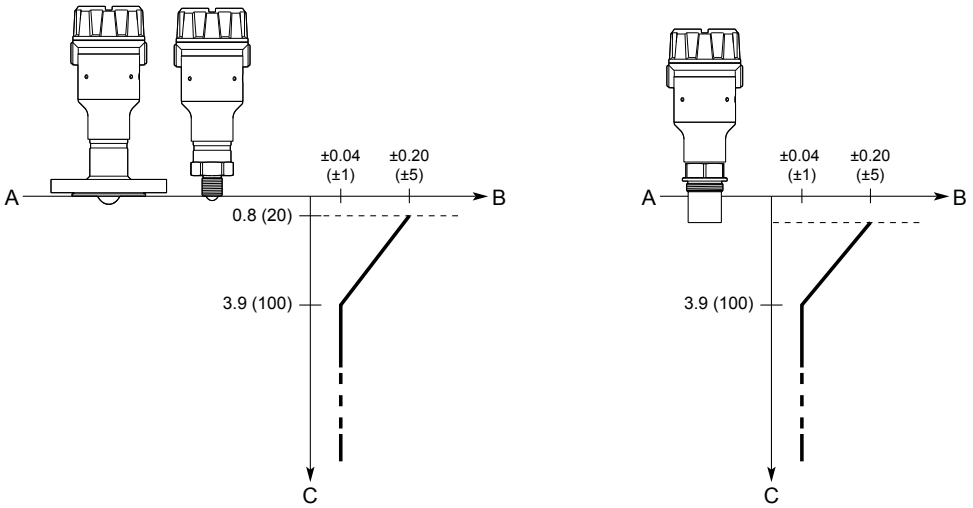

A. Device Reference Point
B. Accuracy in inches (millimeters)
C. Distance in inches (millimeters)

A.1.3 Environment

Vibration resistance

2 g at 10-1000 Hz according to IEC 61298-3, level “field with general application”

Note
The bracket option does not meet the vibration requirements.

Electromagnetic compatibility (EMC)

- EMC Directive (2014/30/EU): EN 61326-1
- EN 61326-2-3
- NAMUR recommendations NE21

Pressure Equipment Directive (PED)

Complies with 2014/68/EU article 4.3

Built-in lightning protection

EN 61326, IEC 61000-4-5, level 2kV

Radio approvals

- Radio Equipment Directive (2014/53/EU):
  - ETSI EN 302 372 (TLPR)
  - ETSI EN 302 729 (LPR)
  - EN 301 489-17 and EN 300 328 (Bluetooth®)
  - EN 62479
- Part 15 of the FCC Rules
- Industry Canada RSS 211

A.2 Functional specifications

A.2.1 General

Field of application

Continuous level measurements on a broad range of liquids and slurries.

Measurement principle

Frequency Modulated Continuous Wave (FMCW)

Frequency range

77 to 81 GHz

Maximum output power

+5 dBm (3.2 mW)

Internal power consumption

< 0.8 W in normal operation

Humidity

0 - 100% relative humidity, non-condensing

Turn-on time

< 60 s[2]

A.2.2 Functional safety

The Rosemount 3408 Level Transmitter is IEC 61508 certified to:

- Low and high demand: Type B element
- SIL 2 for random integrity @ HFT=0
- SIL 3 for random integrity @ HFT=1
- SIL 3 for systematic capability

Related information

Functional Safety Certificate
Rosemount 3408 Safety Manual

A.2.3 4-20 mA HART

Output

Two-wire, 4-20 mA. Digital process variable is superimposed on 4-20 mA signal, and available to any host that conforms to the HART protocol. The digital HART® signal can be used in multidrop mode.

HART universal revision

7

Analog signal on alarm

The transmitter automatically and continuously performs self-diagnostic routines. If a failure or a measurement error is detected, the analog signal will be driven offscale to alert the user. High or low failure mode is user-configurable.

Table A-2: Signal on Alarm

Standard	High	Low
Rosemount standard	≥ 21.75 mA	≤ 3.75 mA
NAMUR NE43	≥ 21.0 mA	≤ 3.6 mA

(2) *Time from when power is applied to the transmitter until performance is within specifications.*

Analog saturation levels

The transmitter will continue to set a current that corresponds to the measurement until reaching the associated saturation limit (and then freeze).

Table A-3: Saturation Levels

Standard	High	Low
Rosemount standard	20.8 mA	3.9 mA
NAMUR NE43	20.5 mA	3.8 mA

A.2.4 Bluetooth® wireless technology

Minimum typical range

50 ft. (15 m) line of sight. Maximum communication range will vary depending on orientation, obstacles (person, metal, wall, etc.) or electromagnetic environment.

A.2.5 Display and configuration

Damping

User selectable (default is 2 s, minimum is 0 s)

Output units

- Level and distance: ft., in., m, cm, mm
- Level rate: ft/s, in./min, in./s, m/h, m/s
- Volume: ft^3, $in.^3$, yd^3, US gal, imperial gal, barrel (bbl), m^3, l
- Temperature: °F, °C
- Signal strength: mV

Output variables

Variable	4-20 mA	Digital output	LCD display
Level	✓	✓	✓
Distance (ullage)	✓	✓	✓
Volume	✓	✓	✓
Scaled variable(1)	✓	✓	✓
Electronics temperature	N/A	✓	✓
Signal quality(1)	N/A	✓	✓
Level rate	N/A	✓	✓
Signal strength	N/A	✓	✓
Percent of range	N/A	✓	✓
Percent of range auxiliary	N/A	✓	✓
User-defined(1)	✓	✓	✓
Loop current	N/A	N/A	✓

(1) Only for transmitters ordered with Smart Diagnostics Suite.

A.2.6 Process pressure

Final rating may be lower depending on flange selection.

Process seal antenna

-15 to 363 psig (-1 to 25 bar)

Lens antenna

-15 to 363 psig (-1 to 25 bar)

ATAP lens antenna

-15 to 7 psig (-1 to 0.5 bar)

A.2.7 Temperature limits

Process temperature

Process seal antenna

-76 to 392 °F (-60 to 200 °C)

Lens antenna

-76 to 392 °F (-60 to 200 °C)

ATAP lens antenna

-4 to 176 °F (-20 to 80 °C)

Note
The temperature range is -40 to 176 °F (-40 to 80 °C) for open air applications.

Ambient temperature

-40 to 176 °F (-40 to 80 °C)

Note
LCD display may not be readable and LCD display updates will be slower at temperatures below -4 °F (-20 °C).

The ambient temperature limits may be further restricted by the process temperature as described by Figure A-2.

Figure A-2: Ambient Temperature vs. Process Temperature

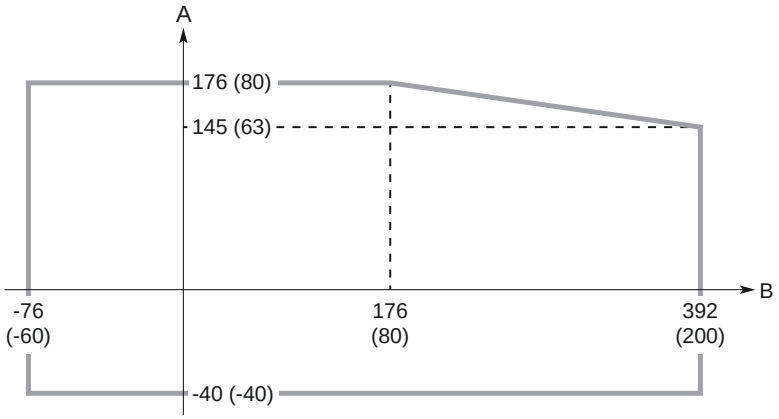

A. Ambient temperature °F (°C)
B. Process temperature °F (°C)

Verify that the operating atmosphere of the transmitter is consistent with the appropriate hazardous locations certifications.

Related information

Product certifications

Storage temperature

-40 to 176 °F (-40 to 80 °C)

A.2.8 Flange rating

ASME

316 SST according to ASME B16.5 Table 2-2.2

EN

1.4404 according to EN 1092-1 material group 13E0

JIS

316 SST according to JIS B2220 material group No. 2.2

A.2.9 Conditions used for flange strength calculations

Table A-4: Stainless Steel Flanges

Item	ASME	EN, JIS
Bolting material	SA193 B8M CL.2	ISO 3506 A4-70
Flange material	Stainless steel A182 Gr. F316 and EN 10222-5-1.4404	
Hub material	Stainless steel SA479 316 and EN 10272-1.4404	

A.3 Physical specifications

A.3.1 Housing and enclosure

Electrical connections

Two cable/conduit entries (½-14 NPT or M20 x 1.5)

Housing material

Polyurethane-covered aluminum

Ingress protection

Process seal and lens antennas

- IP 66/67/68[(3)]
- NEMA® 4X

ATAP lens antenna

- IP 65
- NEMA® 4X

A.3.2 Antenna versions

Process seal antenna

All PTFE wetted parts ideal for use in corrosive applications

Lens antenna

Suitable for use on vessels with small process fittings

(3) *The transmitter meets IP 68 at 3.3 ft. (1 m) for 45 minutes.*

ATAP lens antenna

Designed for open air installations and non-pressurized tanks

A.3.3 Material exposed to tank atmosphere

Process seal antenna

- PTFE sealing: PTFE fluoropolymer

Lens antenna

- PTFE sealing: PTFE fluoropolymer
- Threaded process connection: Stainless steel 316/316L (EN 1.4404)

ATAP lens antenna

- PTFE sealing: PTFE fluoropolymer
- Threaded process connection: Anodized aluminum 6082-T6 or 6061-T6
- O-ring: FKM
- Antenna extension for open air: PTFE fluoropolymer with carbon filler

A.4 Dimensional drawings

Figure A-3: Process Seal Antenna

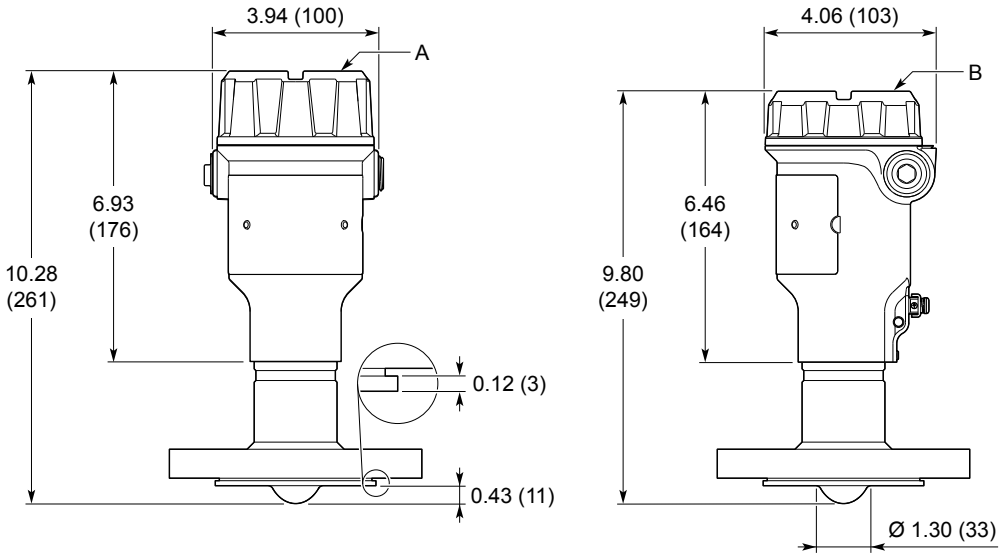

A. LCD display option
B. No LCD display

Dimensions are in inches (millimeters).

Figure A-4: Lens Antenna with ¾-in. Threaded Process Connection

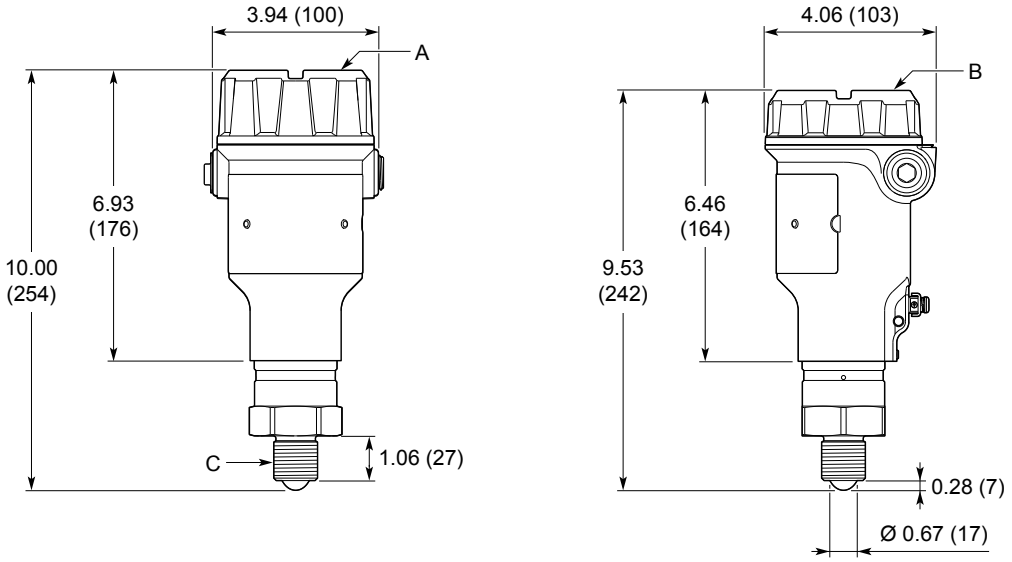

A. LCD display option
B. No LCD display
C. NPT or BSPP (G)

Dimensions are in inches (millimeters).

Figure A-5: Lens Antenna with 1- or 1½-in. Threaded Process Connection

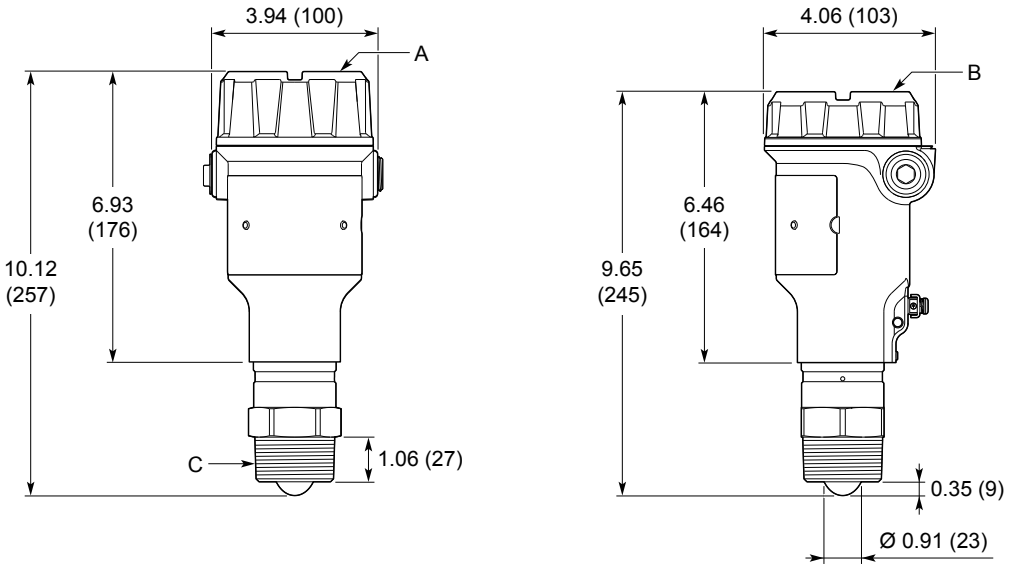

A. LCD display option
B. No LCD display
C. NPT or BSPP (G)

Dimensions are in inches (millimeters).

Figure A-6: ATAP Lens Antenna

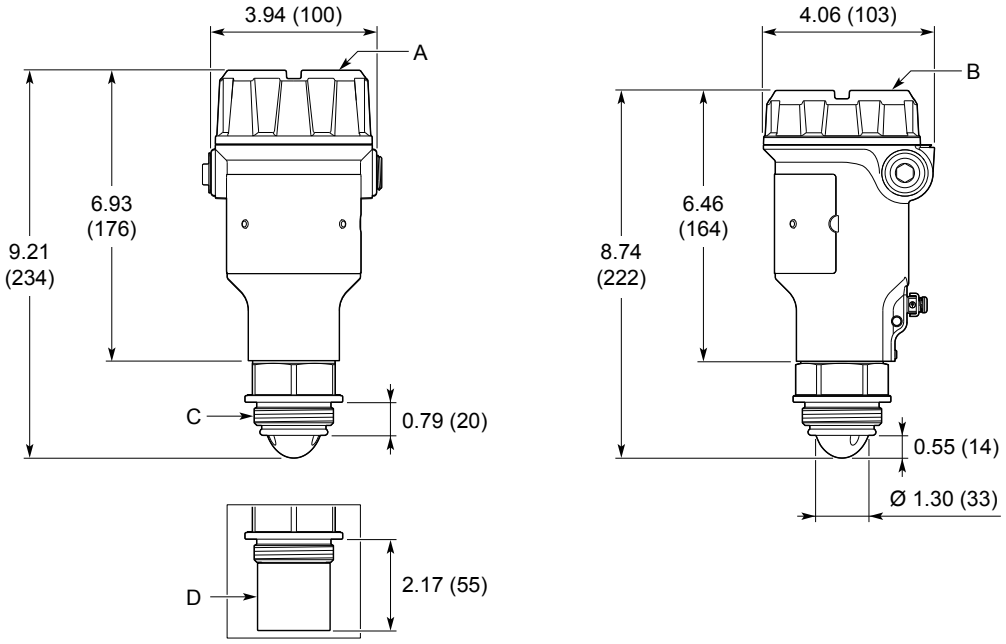

A. LCD display option
B. No LCD display
C. BSPP (G) 1½-in.
D. Antenna extension for open air installations

Dimensions are in inches (millimeters).

Figure A-7: ATAP Lens Antenna with Mounting Bracket

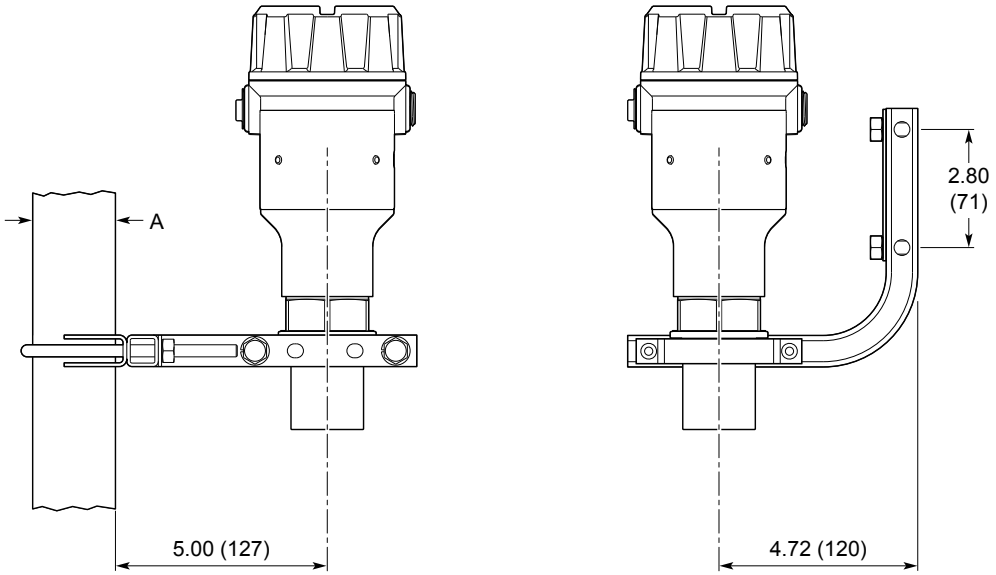

A. Pipe diameter, max 2.5 (63.5)

Dimensions are in inches (millimeters).

B Configuration parameters

B.1 Menu tree

Figure B-1 shows the UIP menu tree for Rosemount Radar Master Plus. See Figure B-2 for the DD menu tree.

Figure B-1: UIP Menu Tree

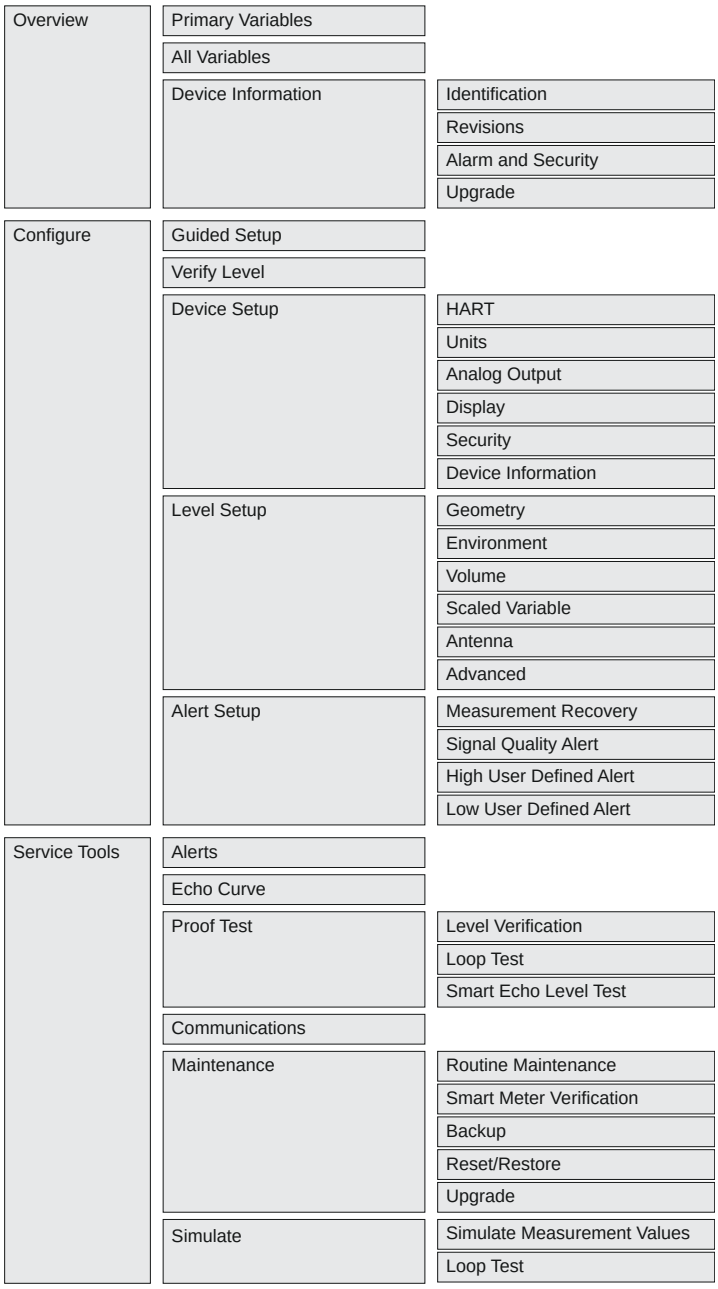

Figure B-2: DD Menu Tree

Overview	Status	
	Primary Purpose Variables	
	Device Information	Identification
		Revisions
		Alarm and Security
		Upgrade
Configure	Guided Setup	Basic Setup
		Verify Level
	Manual Setup > Device Setup	HART
		Units
		Analog Output
		Display
		Security
		Device Information
	Manual Setup > Level Setup	Geometry
		Environment
		Volume
		Scaled Variable
		Antenna
		Advanced
	Alert Setup	Measurement Recovery
		Signal Quality Alert
		High User Defined Alert
		Low User Defined Alert
Service Tools	Alerts	
	Variables	Mapped Variables
		Process
		Device
		Signal Quality
	Communications	
	Maintenance	Routine Maintenance
		Smart Meter Verification
		Reset/Restore
	Echo Tuning	Thresholds
		Echo Peaks
		Suppress
	Simulate	Simulate Measurement Values
		Analog Out > Loop test

B.2 Device setup

B.2.1 HART protocol

HART/polling address

The address range is 0 to 63. The transmitter operates in either standard mode with a 4–20 mA output signal or in multidrop. When the transmitter is in multi-drop mode, the current output is fixed to 4 mA.

Burst mode

When set to burst mode, the transmitter regularly sends out messages instead of waiting for the host to request it.

Both the transmitter and host must be configured to operate in burst mode. Almost all HART host systems today are designed to communicate in poll/response mode, not burst mode. However, the Rosemount 333 HART Tri-Loop™ requires burst mode communication.

Related information

Use with the Rosemount 333 HART Tri-Loop

Variable mapping

Up to four device variables can be assigned for the HART protocol. The transmitter outputs a 4-20 mA signal proportional to the primary variable. Additional variables are available through the HART digital signal.

Related information

Output variables

Damping value

This parameter defines how fast the transmitter reacts to a change of the level value (step response). The default value is 2 seconds.

A high value makes the level reading steady, while a low value allows the transmitter to respond to rapid level changes (but the presented level value may be less steady).

Percent of range auxiliary

Set this parameter to output the percent of range for another device variable (in addition to the primary variable).

Table B-1: Percent of range auxiliary

Parameter	Description
Percent of range auxiliary	The variable selected for percent of range auxiliary.
100% auxiliary	Value corresponding to 100 percent range of variable selected for percent of range auxiliary.
0% auxiliary	Value corresponding to 0 percent range of variable selected for percent of range auxiliary.

B.2.2 Units

The units for length, volume, temperature, and level rates are selectable. All configuration parameters and device variables will be expressed in these units.

Related information

Output units

B.2.3 Analog output

The output source (primary variable), range values, and alarm mode are specified for the analog output.

Primary variable

Select the desired device variable to use for the analog output.

Upper/lower range value

Enter the range values that correspond to the analog output values 4 and 20 mA. The transmitter will drive the output to saturation mode if a measured value goes outside the 4-20 mA range values.

Note
The 20 mA point should be set below the reduced accuracy zone at the top of the tank.

Figure B-3: Example of Range Value Settings

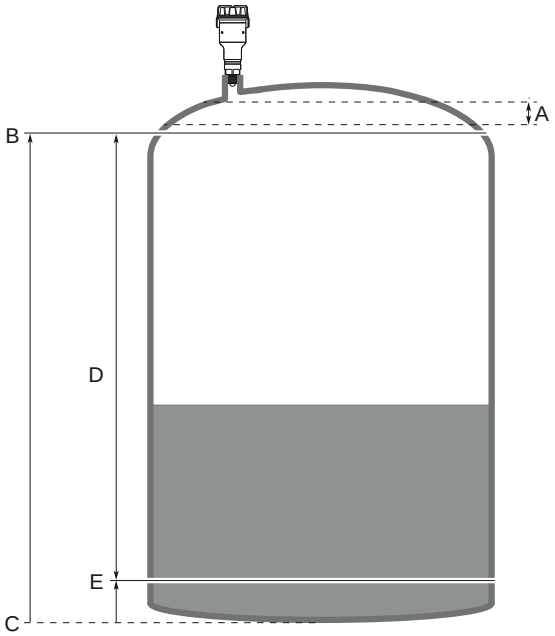

A. *Reduced accuracy zone*
B. *100% (20 mA)*
C. *Zero Level*
D. *Level measurement range 0-100%*
E. *0% (4 mA)*

Related information

Accuracy over measuring range

Alarm mode

The transmitter automatically and continuously performs self-diagnostic routines. If a failure or a measurement error is detected, the transmitter drives the output to selected alarm limit (high or low).

High/low alarm value

The high/low alarm current for the analog output when the device enters the alarm mode.

Related information

Analog signal on alarm

High/low saturation value

The device will continue to set a current that corresponds with the measurement until reaching the upper/lower limit (and then freeze).

Related information

Analog saturation levels

B.2.4 Display

Select variables to show on the optional LCD display. If more than one variable is selected, then the LCD display toggles between the output variables.

Display language

The display can be configured to be in different languages.

Display orientation

The display text can be rotated 180 degrees.

Related information

Set up the LCD display

B.2.5 Security

Write protection

The Rosemount 3408 supports both software and hardware write protection.

SW write protection

The transmitter can be write protected (with or without a password) to prevent unintentional changes.

HW write protection

The security switch is used to prevent changes to the configuration data. In the locked (🔒) position, all writes to the transmitter are rejected.

B.2.6 Safety Instrumented System

Operational mode

The IEC 61508 certified version has two operational modes: Control/Monitoring and Safety (SIS).

If the transmitter is used as safety device in a Safety Instrumented System, the operational mode must be set to Safety (SIS).

Safety mode

When the operational mode is set to Safety (SIS), then the safety mode must be enabled for the transmitter to become operational. When safety mode is enabled, the transmitter is write protected (with or without a password) to prevent unauthorized changes.

Change counter

A counter that increments each time the device enters active Safety Mode.

B.2.7 Bluetooth®

Bluetooth radio ID

The unique identifier for this device's Bluetooth radio.

Number of Bluetooth security resets

A counter of the number of times a Bluetooth security reset has been performed on this device.

B.2.8 Device information

Tag

Identifier of up to 8 characters for the device used by host system. The tag is typically a reference number, location, or duty description.

Long tag

Identifier of up to 32 characters for the device used by host system. It is recommended to enter both a short and a long tag (they may be the same).

Date

The date field can be used for any purpose, for example to save the date of the last configuration change.

Descriptor

The 16-character descriptor field can be used for any purpose.

Message

The 32-character message field can be used for any purpose, such as providing details of the last configuration change.

B.3 Level setup

B.3.1 Geometry

The transmitter configuration includes setting the tank geometry parameters, see Figure B-4 and Figure B-5.

Figure B-4: Tank Geometry, Basic Dimensions

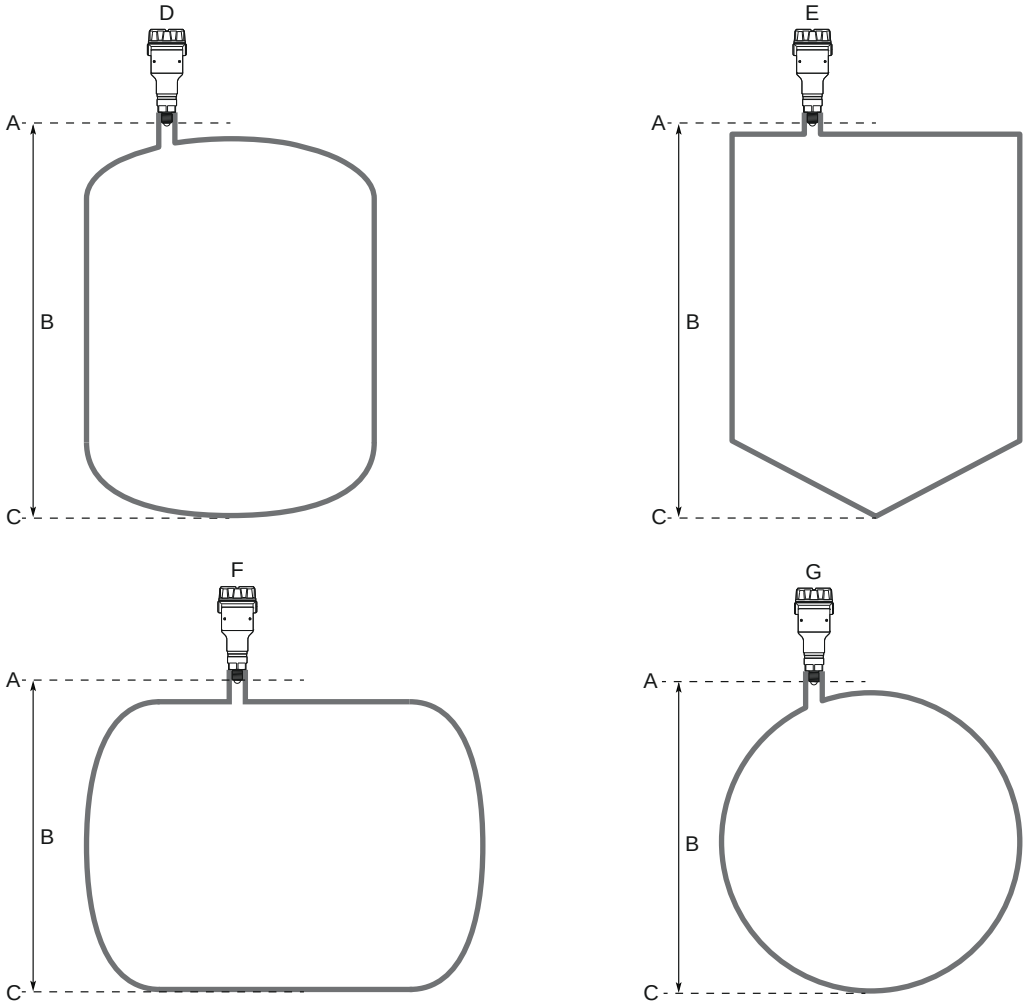

A. Device Reference Point
B. Reference Height
C. Zero Level
D. Vertical cylinder
E. Cubical Tank
F. Horizontal cylinder
G. Spherical tank

Figure B-5: Tank Geometry, All Dimensions

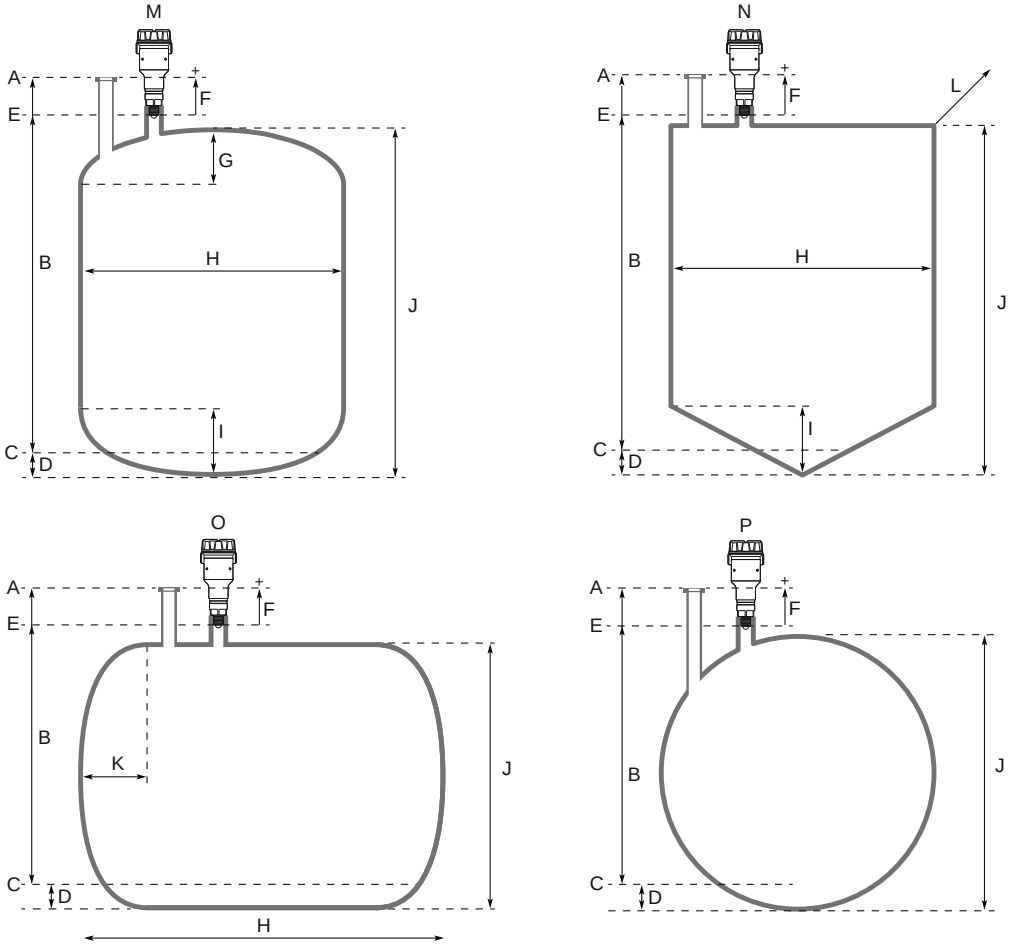

A.	Tank Reference Point	I.	Bottom Shape Height*/ Bottom Height**
B.	Reference Height	J.	Height of Tank*/Height (of tank)**
C.	Zero Level	K.	End Shape Length*/End Length**
D.	Bottom Offset	L.	Length of Tank*/Length**
E.	Device Reference Point	M.	Vertical cylinder
F.	Reference Offset	N.	Cubical cylinder
G.	Top Shape Height*/Top Height**	O.	Horizontal cylinder
H.	Width of Tank*/Width**	P.	Spherical cylinder

* DD

** UIP (Rosemount Radar Master Plus)

Tank shape

Select a tank shape that corresponds to the actual tank. If the actual tank does not match one of the pre-defined tank shapes, then select Other (e.g. level measurements of sumps, basins, or ponds).

Tank top shape

Form of the upper tank closure.

Figure B-6: Tank Top Shape

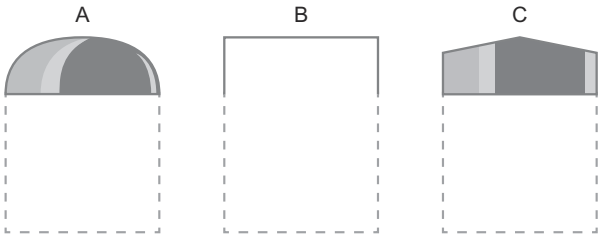

A. Dome
B. Flat
C. Conical

Tank bottom shape

Form of the lower tank closure.

Figure B-7: Tank Bottom Shape

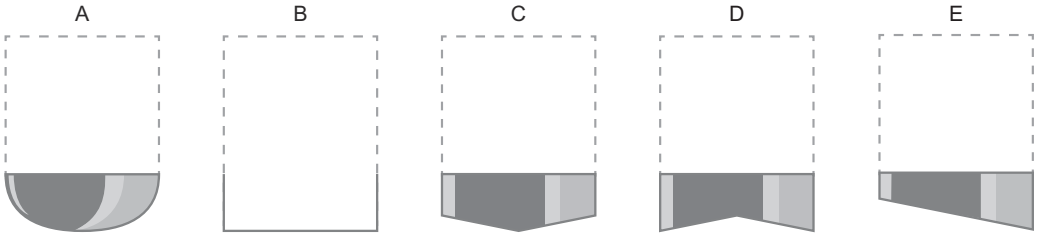

A. Dome
B. Flat
C. Conical/pyramid
D. Flat, inclined (for vertical cylinder)
E. Flat, inclined (for cubical tank)

Tank end shape

For a horizontal tank, form of the tank ends. Same shape is assumed at both ends.

Figure B-8: Tank End Shape

A. Dome
B. Flat

Reference height

Distance between the Tank Reference Point (typically same as Device Reference Point) and Zero Level.

Ensure the Reference Height is set as accurate as possible. The transmitter measures the distance to the product surface and subtracts this value from the Reference Height to determine the level.

Device reference point

Figure B-9 shows the Device Reference Point for various antennas.

Figure B-9: Device Reference Point

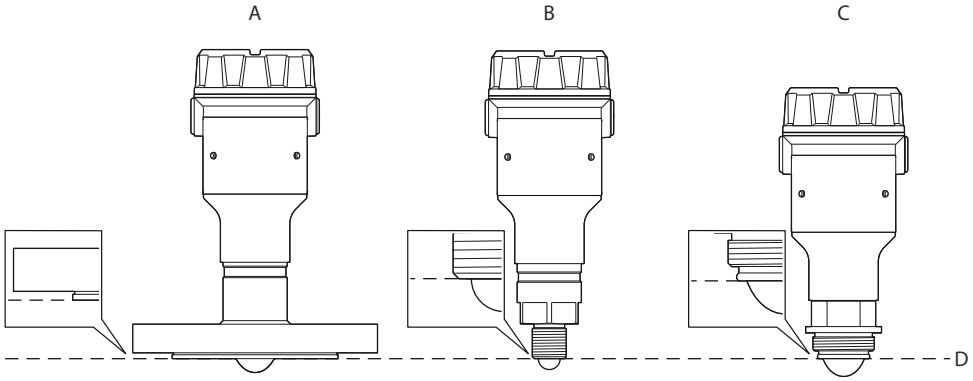

A. Process seal antenna
B. Lens antenna
C. ATAP lens antenna
D. Device Reference Point

Reference offset

Distance between the Device Reference Point and the Tank Reference Point (typically the upper side of a customer plug where levels can be manually measured).

The Reference Offset parameter can be used to specify your own reference point, for example when the measured level by the transmitter should correspond with the level value obtained by hand-dipping.

Figure B-10: Reference Offset

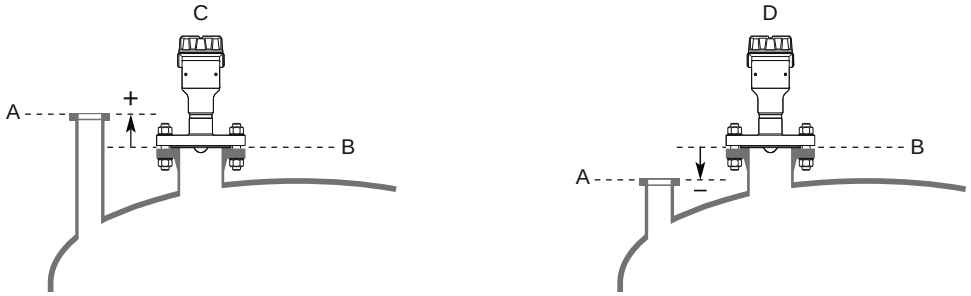

A. Tank Reference Point
B. Device Reference Point
C. Reference Offset > 0
D. Reference Offset < 0

Bottom offset

The Bottom Offset is defined as the distance between Zero Level and the tank bottom. The default value is zero.

If the Zero Level is not located at the tank bottom, then enter a Bottom Offset. It is needed for the transmitter to know the position of the tank bottom echo and for correct volume calculations.

Figure B-11: Bottom Offset

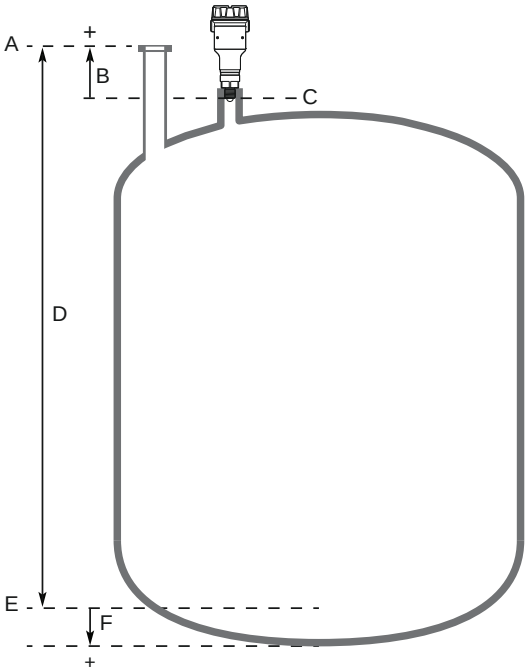

A. Tank Reference Point
B. Reference Offset
C. Device Reference Point
D. Reference Height
E. Zero Level
F. Bottom Offset

Height of tank

The vertical distance between tank bottom and tank roof. For a horizontal cylinder or spherical tank, this is the diameter of the tank.

Width of tank

The horizontal distance between tank ends. For a vertical cylinder, this is the diameter of the tank. The width of tank is also the shortest horizontal side of a box-shaped (cubical) tank.

Length of tank

The longest horizontal side of a cubical tank.

Top shape height

The height of the shape on tank top (typically from shape floor to cap top, measured at cylinder center line).

Bottom shape height

The height of the shape at tank bottom (typically from shape floor to shape bottom, measured at cylinder center line).

End shape length

The width of the spherical cap at tank end (measured at cylinder center line).

Show negative level as zero

When this setting is selected and the product surface is at or below Zero Level, the level measurement output will be zero.

B.3.2 Environment

Process conditions

Foam

This parameter should be used if there is, or may be, surface foam. When setting this parameter, the transmitter is optimized for conditions with weak and varying surface echo amplitudes, which is typical for presence of surface foam.

Turbulent surface

Set this parameter to improve the performance of the transmitter when there are small and local rapid level changes caused by surface turbulence. The reason for the turbulence might be splash loading, agitators, mixers, or boiling product.

Cleaning in place

Optimize measurement performance for applications with tank cleaning processes.

Maximum level rate

Fastest rate that may occur in the monitored process to (partially) fill or empty this tank. Note that product level rate may be higher during upset conditions.

Product dielectric range

Select the range of the dielectric constant for the product in the tank. If the range is not known, or if the product in the tank is changed on a regular basis, then select Default.

B.3.3 Volume

Select if the volume measurement should be calculated from the configured tank dimensions or a strapping table.

Strapping tables can be used for irregularly shaped tanks, to eliminate errors due to bulging when product is added to a tank, or if a pre-defined tank type does not provide sufficient accuracy.

Strapping table

Strapping table requires entering level-volume pairs in a table (maximum 50 points). Use most of the strapping points in regions where the tank shape is non-linear. Starting at the bottom of the tank, for each new point, enter the total volume up to the specified level value.

Volume offset

Use this parameter to add a volume to each calculated volume value, for example a sump volume below the Zero Level in the tank.

B.3.4 Scaled variable

The scaled variable can be used to convert a device variable into an alternative measurement, such as open channel flow, mass, or calibrated level (e.g. 5 point verification). This variable is available only for transmitters ordered with Smart Diagnostics Suite.

The scaled variable is defined by creating a table of device variables and corresponding output variables. A maximum of 50 points can be specified. Between the points linearly interpolated values are calculated.

Figure B-12: Scaled Variable Examples

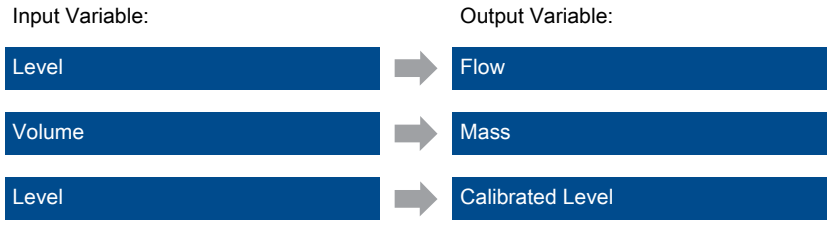

As an example, consider a product with a density of 900 kg/m^3. In this case, the volume to mass conversion is given by the following table:

Table B-2: Example of Scaled Variable Table

Number	Input value (volume)	Output value (mass)
1	0 m^3	0 kg
2	100 m^3	90 000 kg

Scaled variable name

Name of the scaled variable. It is recommended to enter a short name to fit into the LCD display area.

Scaled variable unit

Units of measurement of the scaled variable.

Number of scaled values

Number of values in the scaled variable table.

Input variable

Select the input variable to use for scaled variable calculation.

B.3.5 Antenna

Antenna type

The transmitter is designed to optimize measurement performance for each available antenna type. This parameter is pre-configured at factory; it only needs to be set if the antenna is changed to another type, or if you have installed a spare transmitter.

User defined antenna options

These antenna parameters are applicable to customized antennas only. The settings are typically provided by factory.

Upper null zone

The Upper Null Zone defines how close to the device's reference point a level value is accepted. You can extend this value to block out disturbing echoes close to the antenna, for example from the tank nozzle.

Note
Make sure the 20 mA value is below the Upper Null Zone. Measurements are not performed within the Upper Null Zone (UNZ).

Figure B-13: Upper Null Zone

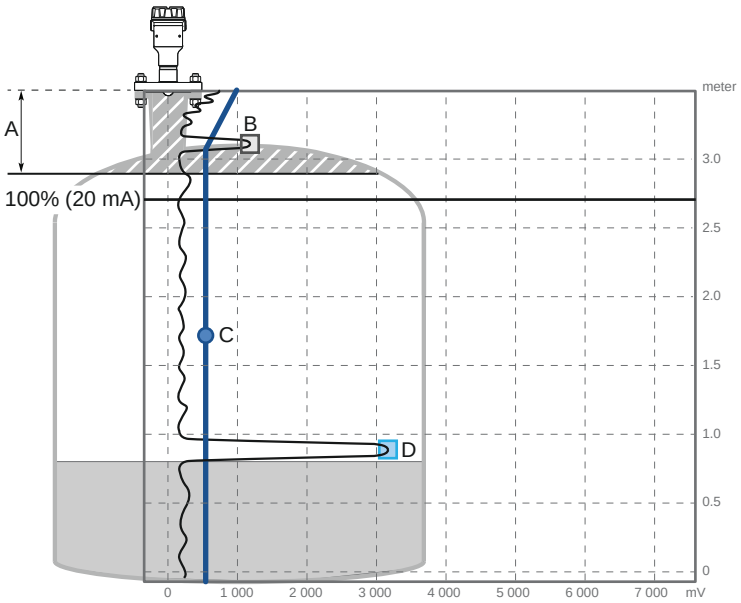

A. Upper Null Zone
B. Disturbance echo
C. Amplitude threshold
D. Product surface echo

Related information

Change the upper null zone

B.3.6 Advanced

Calibration offset

Difference between surface distance measured by transmitter and the same distance measured by, for example, hand-dipping with a measurement tape. A positive Calibration Offset value will increase the presented level value.

It is recommended to run the Verify Level tool to match the product level reported by the transmitter to a reference measurement.

Figure B-14: Calibration Offset

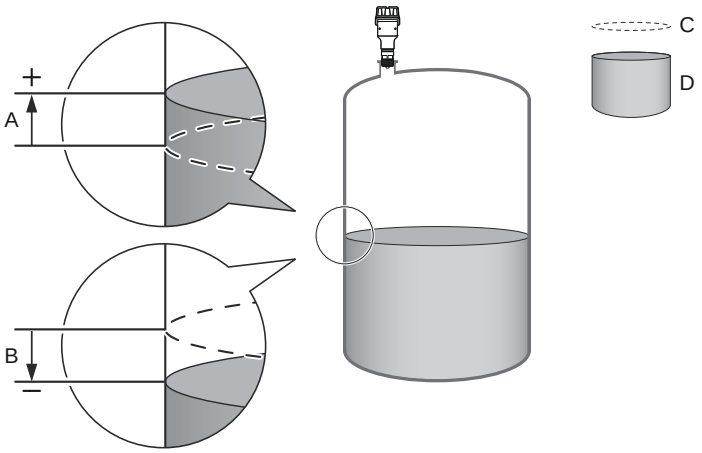

A. Positive Calibration Offset value
B. Negative Calibration Offset value
C. Reported level
D. Actual level

Related information

Run verify level

User defined variable setup

This section applies only to transmitters ordered with Smart Diagnostics Suite.

Name

Name of the user defined variable. It is recommended to enter a short name to fit into the LCD display area.

Input register

Enter the number of the input register that contains value of the user defined variable. See Table B-3 for a list of suitable input registers.

The default value is 20210 (Distance).

Table B-3: List of Input Registers to the User Defined Variable

Variable	Register	Description
Min Electronics Temperature	20146	Minimum electronics temperature measured by the device (°C)
Max Electronics Temperature	20148	Maximum electronics temperature measured by the device (°C)
Min Signal Quality	21034	Minimum signal quality measured by the device since last signal quality reset. Signal quality calculation must be enabled to use this variable.
Max Signal Quality	21036	Maximum signal quality measured by the device since last signal quality reset. Signal quality calculation must be enabled to use this variable.
Distance to Upper Surface	21042	Distance to the upper product surface (m) when measuring on multiple products in the tanks. Double Surface function must be enabled to use this variable.
Distance to Lower Surface	21044	Distance to the lower product surface (m) when measuring on multiple products in the tanks. Double Surface function must be enabled to use this variable.
Surface Signal/Noise Ratio	21054	Ratio between surface echo signal strength and signal noise (dB). A high value (>20 dB) indicates very good margin to noise.
Product Dielectric Constant	22800	Square root of the product dielectric constant estimated by the transmitter when the Bottom Projection function is enabled. The product dielectric constant is calculated when both the bottom and surface echoes are found by device, and when surface echo is within the Max Projection Distance. Product dielectric constant estimation is frozen if any of these conditions are not fulfilled.

Unit

Units of measurement of the user defined variable.

More advanced options

More advanced options are only available in Rosemount Radar Master Plus.

By default, these parameters are automatically set based on current configuration. It is recommended that these parameters should remain at the default settings, unless there is a good understanding of the function and capability of the parameters.

Empty tank handling

The Empty Tank Handling functions handle situations when the surface echo is close to the tank bottom.

Table B-4: Empty Tank Handling

Parameter	Description
Empty tank detection area	The Empty Tank Detection Area defines a range where it is accepted to lose the echo from the product. If the echo is lost in this range, the tank is considered empty and the level is presented as 0. When the tank is empty, the transmitter looks in this range for the product surface. When a new echo is found in this range, it is considered to be the product surface. Therefore, if there are disturbance echoes in this area, they may need to be filtered out. This function requires the Bottom echo visible when tank is empty parameter to be disabled.
Bottom echo visible when tank is empty	Only enable this parameter if the bottom echo is visible when tank is empty. By setting this parameter, the bottom echo will be treated as a disturbance echo to facilitate tracking of weak surface echoes close to the tank bottom.

Related information

Enable bottom echo visible when tank is empty

Tank bottom projection

The Tank Bottom Projection is used to enhance measurement performance near the bottom of the tank. When the tank bottom echo is strong (typical for flat tank bottoms) and the dielectric constant of the product is low (e.g. oil), the transmitter may lock on the bottom echo and report a false level measurement (empty tank). This problem can be solved by using the Tank Bottom Projection function.

Table B-5: Tank Bottom Projection

Parameter	Description
Bottom product dielectric constant	Enter the product dielectric constant for the product in the bottom of the tank.
Maximum projection distance	This defines the range where the function is active. Enter the maximum distance from the zero level (tank bottom).
Minimum tank bottom amplitude	Enter the minimum allowed amplitude for the echo from the tank bottom before this function is activated.

Related information

Use tank bottom projection

Echo tracking

Surface echo tracking

Use these settings to configure how the transmitter should keep track of the surface. These are advanced settings. Normally, they should not be changed.

Table B-6: Surface Echo Tracking

Parameter	Description
Search window size	This parameter defines a window centered at the current surface position where new surface echo candidates can be selected. The size of the window is ±Search Window Size. Echoes outside this window will not be considered as surface echoes. If there are rapid level changes in the tank, the value of the Search Window Size can be increased to prevent the transmitter from missing level changes. On the other hand, a large value may cause the transmitter to select an invalid echo as the surface echo.
Track first echo	Select the Track First Echo check box if the first echo above the amplitude threshold always should be considered as the surface echo. **Note** Before enabling Track First Echo, analyze the echo curve and check amplitude thresholds.

Double surface handling

If there are multiple products in the tank, the Double Surface Handling function can be manually set to allow user to select if the upper or lower product should be used as output.

The upper and lower surface echoes must be stronger than any disturbance echoes in the search region for Double Surface Handling to function properly.

Table B-7: Double Surface Handling

Parameter	Description
Track upper surface	Track upper surface when there are multiple products in the tank (for example thin oil layer on top of water).
Track lower surface	Track the lower product surface, such as the interface when there are multiple products in the tank, or the product surface instead of a foam layer.
Upper product dielectric constant	Enter the dielectric constant for the upper product. A more precise value results in better accuracy for the lower surface level.

Double bounce handling

Use this function to prevent transmitter from locking on strong double bounce echoes (may occur in spherical and horizontal cylinder tanks).

Related information

Handling strong double bounce echoes

Overfill prevention

The Overfill Prevention function adds an extra layer of protection to prevent tank overfills. The function uses an independent echo logic algorithm to identify the surface echo close to the top of the tank.

In the unlikely event there is a conflict between the normal and the overfill prevention echo logic, the Overfill Prevention function will have a precedence in determining the position of the surface. The transmitter will then output this new value, or generate an alarm if the normal echo logic is not able to find the surface echo at the new position.

The Overfill Prevention Range defines the lower end of the range in which the function operates. The range is configurable.

Expert options

Use the expert options to view input registers, and to view and edit holding registers.

Note
Instructions for how to use Expert options are typically provided by factory and should only be modified if required.

Related information

View input registers
View holding registers

B.4 Alert setup

B.4.1 Measurement recovery

Measurement recovery time

The Measurement Recovery Time (Echo Timeout) parameter controls the maximum time from when measurement is lost (e.g. due to process conditions such as foam or turbulence) until it is annunciated. If measurement is recovered within the time specified by this parameter, then it will not be annunciated.

Measurement recovery handling

By default, the Measurement Recovery Time is set up automatically by the device based on the transmitter configuration.

It is recommended to leave the Measurement Recovery Handling at default unless required by your application. A higher value may be entered to increase robustness and

avoid nuisance alarms. Only enter a lower value if lost measurement is required to be annunciated within a certain time for your application.

Used measurement recovery time

This is the value used by the transmitter.

B.4.2 Signal quality alert

This section applies only to transmitters ordered with Smart Diagnostics Suite.

Signal Quality is a measure of the product surface echo amplitude compared to the surface threshold and noise.

The Signal Quality spans from 0 to 10. A low value means that there is a risk for the noise peak to be mistaken for the product surface peak.

Note
The Signal Quality may not be 10 even if the antenna is clean. The value depends on antenna type, application conditions, configured surface threshold, as well as the condition of the antenna.

Build up on the antenna and different surface conditions are factors that can result in a low Signal Quality value. By setting an alert, the Signal Quality value can be used to schedule maintenance to clean the antenna, fine-tune the surface threshold, or detect and monitor adverse surface conditions such as turbulence or foam.

Suitable alert limits vary from application to application. Appropriate value can be determined by logging Signal Quality over time and viewing maximum/minimum values. The Signal Quality Alert limit should be at least 1, but a better guideline is 2-3.

Figure B-15: Signal Quality Alert

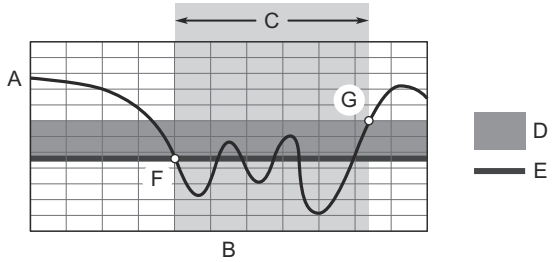

A. *Signal quality*
B. *Time*
C. *Alert ON*
D. *Deadband*
E. *Limit*
F. *The Signal Quality drops below the alert limit and an alert message is triggered.*
G. *The alert message is reset once the Signal Quality value rises above the Deadband range.*

Limit

The Signal Quality value that will trigger the alert.

Deadband

The Deadband is a buffer zone so the alerts do not toggle on and off when the Signal Quality fluctuates around the alert limit. The alert is set when value falls below the alert limit. The alert is then cleared when value rises above the Deadband range.

B.4.3 High/low user defined alert

A high and low alert may be established to output an alert message when the measurement readings exceed the specified limits.

Variable

Select the device variable to use for the alert.

Limit

The value that will trigger the alert.

Deadband

The Deadband is a buffer zone so the alerts do not toggle on and off when the measurement value fluctuates around the alert limit. The alert is set when the value exceeds the alert limit. The alert is then cleared when the value falls outside the Deadband range.

Figure B-16: High User Defined Alert

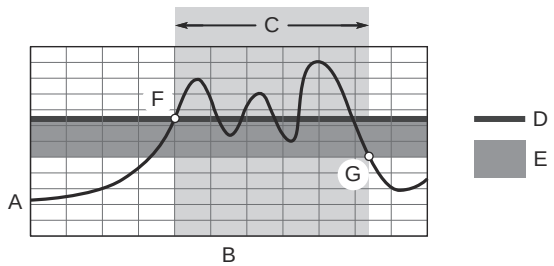

A. User Defined Alert
B. Time
C. High Alert ON
D. Limit
E. Deadband
F. The alert is active when the level value rises above the alert limit.
G. The alert turns off when the value falls below the deadband.

Figure B-17: Low User Defined Alert

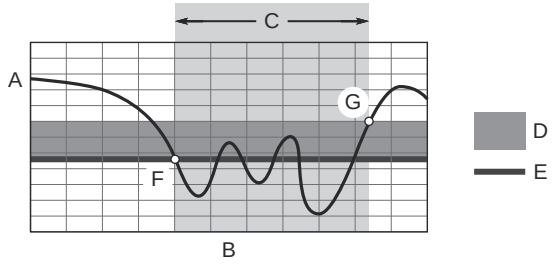

A. User Defined Alert
B. Time
C. Low Alert ON
D. Deadband
E. Limit
F. The alert is active when the level value falls below the alert limit.
G. The alert turns off when the value rises above the deadband.

00809-0100-4418
Rev. AA
2022

For more information: **Emerson.com**

©2022 Emerson. All rights reserved.

Emerson Terms and Conditions of Sale are available upon request. The Emerson logo is a trademark and service mark of Emerson Electric Co. Rosemount is a mark of one of the Emerson family of companies. All other marks are the property of their respective owners.

ROSEMOUNT™

EMERSON™