INSTALLATION MANUAL

Saab TankRadar L/2

US Version

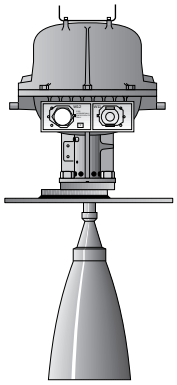

Horn Antenna Gauge

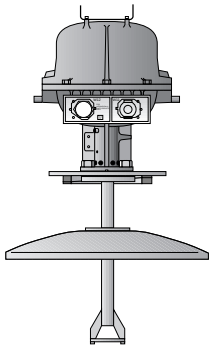

Parabolic Antenna Gauge

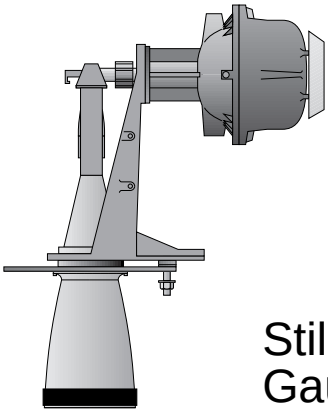

Still Pipe Gauge

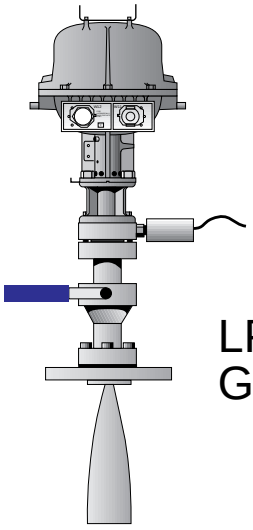

LPG/LNG Gauge

Copyright © June 1995
Saab Marine Electronics AB

Copyright © June 1994

Saab Marine Electronics AB

The contents, descriptions and specifications within this manual is subject to change without notice. Saab Marine Electronics AB accepts no responsibility for any errors that may appear in this manual.

The manuals available for TankRadar L/2 are

- Technical Description
- Installation Manual
- Operator's Manual
- Operator's Manual for OPI/2
- COS Operator's Manual
- Service Manual

The **Technical Description** contains all technical data on the various parts of the TankRadar L/2 System.

The **Installation Manual** is used for planning and performing the installation of the system.

Once the parts of the system have been installed, then use either the Operator's Interface (OPI) or the Configuration Software (COS) to configure the system. See the OPI Operator's Manual or the COS Operator's Manual for detailed explanation.

The **OPI Operator's Manual** describes how to operate the TankRadar L/2 System using the Operator's Interface software on a personal computer.

The **Operator's Manual for OPI/2** describes Operator's Interface with the optional inventory functions included, designated OPI/2.

The **COS Operator's Manual** describes how to use the Configuration Software (COS).

Contents

The manuals available for TankRadar L/2 are 2
Denominations and abbreviations used in this manual: 6
1 Introduction to the TankRadar L/2 System 7
2 Safety 10
2.1 Intrinsic Safety 10
2.2 Explosion Proof 11
2.3 Specific FCC Requirements (US market only) 11
3 Description of the Radar Tank Gauges 12
3.1 Transmitter Head 12
3.1.1 Electronic Unit 13
3.1.2 Cable Outputs 13
3.1.3 Power Supply to the Radar Tank Gauge 14
3.1.4 Barrier Unit Card, BU (Option) 14
3.1.5 Current Loop Card, CLC (Option) 15
3.1.6 Metrological Seal 15
3.1.7 Installation Data for the Transmitter Head 15
3.2 Description of the Horn Antenna Gauge, RTG 2920. 16
3.2.1 Installation Data for RTG 2920 16
3.3 Description of the Parabolic Antenna Gauge, RTG 2930 17
3.3.1 Installation Data for RTG 2930 17
3.4 Description of the Still Pipe Gauge, RTG 2940 18
3.4.1 Installation Data for RTG 2940 18
3.5 Description of the LPG/LNG Gauge, RTG 2960 19
3.5.1 Installation Data for RTG 2960 19
4 Description of the Data Acquisition Units 20
4.1 Connection of the Sensors 20
4.2 Selecting the Temperature Range 21
4.3 Local Readout Display 21
4.4 Write Enable/Inhibit Switch 21
4.5 Common Installation Data for Both DAUs 22
4.6 Description of the Slave Data Acquisition Unit, DAU 2100 22
4.6.1 Installation Data for DAU 2100 22
4.7 Description of the Independent Data Acquisition Unit 23
4.7.1 Power Supply 23
4.7.2 Relays (Optional) 23
4.7.3 Installation Data for DAU 2130 24
5 Description of the Field Bus Modem, FBM 2170 24
5.1 Installation Data for FBM 2170 24
6 Description of the Field Communication Unit, FCU 2160 25
6.1 Communication Ports 25
6.2 FCU Enclosure 26
6.3 FCU Power Supply 26
6.4 Write Inhibit/Enable Switch 26
6.5 Installation Data for FCU 2160 27

7 Description of the Junction Boxes 28
- **7.1 Junction Box JB 8 for Connection of RTG to Slave DAU 28**
- **7.2 Junction Box JB 12 for Connection of RTG (with CLC) to Slave DAU 28**
- **7.3 Junction Box JB 16 for Connection to RTG and Independent DAU 29**
- **7.4 Junction Box JB 36 for Connection of Temperature Sensors 29**

8 Connection to a Plant Host Computer (Plant DCS) 29
- **8.1 Connect to the FCU for Quick Updates 30**
- **8.2 Connect to OPI/2 for Inventory Data 30**

9 Installation Schedule 30

10 Requirements on the installation of the Radar Tank Gauges 31
- **10.1 Requirements for the Horn Antenna Gauge, RTG 2920 ..... 32**
  - 10.1.1 Free Space Requirement 32
  - 10.1.2 Socket Requirement 33
- **10.2 Requirements for Parabolic Antenna Gauge, RTG 2930 ..... 34**
  - 10.2.1 Inclination of the Parabolic Antenna Gauge 34
  - 10.2.2 Free Space Requirement 35
  - 10.2.3 Flange Requirements 36
  - 10.2.4 New Tanks 36
  - 10.2.5 Socket Requirements 37
- **10.3 Requirements for the Still Pipe Gauge, RTG 2940 ..... 38**
  - 10.3.1 Still Pipe Requirements 38
  - 10.3.2 Flange Requirements 38
  - 10.3.3 New Tanks 39
  - 10.3.3 Service Space 39
- **10.4 Requirements for the LPG/LNG Gauge, RTG 2960 ..... 40**
  - 10.4.1 Temperature and Pressure Measurement 40
  - 10.4.2 Still Pipe 40
  - 10.4.3 References in Still Pipe 40
  - 10.4.4 System with Reference Pin and Reflector Plug 41
  - 10.4.5 System with Reference Pins Only 41
  - 10.4.6 Extension Pipe for Minimum Distance 41

11 Mechanical Installation of the Radar Tank Gauges 42
- **11.1 Installation of Horn Antenna Gauge, RTG 2920 ..... 42**
- **11.2 Installation of the Parabolic Antenna Gauge, RTG 2930 ..... 44**
- **11.3 Installation of the Still Pipe Gauge, RTG 2940 ..... 47**
- **11.4 Installation of the LPG/LNG Gauge, RTG 2960 ..... 50**

12 Electrical Installation 53
- **12.1 Cabling for Power Supply 53**
- **12.2 Cabling for TRL/2 Bus 54**
- **12.3 Grounding 54**
- **12.4 Electrical Installation of the Radar Tank Gauge, RTG 54**
  - 12.4.1 The Non-Intrinsically Safe Connection (W11) 54
  - 12.4.2 The Intrinsically Safe Connection (W12) 54

12.5 Electrical Installation of the Data Acquisition Unit, DAU 55
12.5.1 Electrical Installation of the Slave DAU, DAU 2100..... 55
12.5.2 Electrical Installation of the Independent DAU, 2130..... 55
12.6 Electrical Installation of the Field Bus Modem, FBM 2170 56
12.7 Electrical Installation of the Field Communication Unit, FCU 2160 56
13 List of Drawings 57
13.1 Mechanical Installation 57
13.2 Electrical Installation 57
14 Description of the Required System Information 58
14.1 System Configuration 58
14.2 System Master 58
14.3 Plant Host Computer System (Plant DCS) 58
14.1.3 Tank Data 58
Required System Information Form ..... Appendix 1
Index ..... Index 1

Denominations and abbreviations used in this manual:

BU	-	Barrier Unit
CLC	-	Current Loop Card
DAU	-	Data Acquisition Unit
DMB	-	DAU Mother Board
DOS	-	Disk Operating System. An operating system for PC's.
DPS	-	DAU Power Supply board
DXB	-	DAU Extended Board
EEPROM	-	Electrically Erasable PROM
FBM	-	Field Bus Modem
FCC	-	Federal Communications Commission
FCU	-	Field Communication Unit
FMCW	-	Frequency Modulated Continuous Wave
FSK	-	Frequency Shift Keyed
IS	-	Intrinsically Safe
JB	-	Junction Box
LCD	-	Liquid Crystal Display
OPI	-	Operator's Interface
OS/2	-	An operating system for PC's.
PC	-	Personal Computer
PCB	-	Printed Circuit Board
PROM	-	Programmable Read Only Memory
PTFE	-	Polytetrafluoroethylene. A polymer also marketed as Teflon.
RF-head	-	A device for emitting and receiving microwaves.
RTD	-	Resistance Temperature Detectors
RTG	-	Radar Tank Gauge
TH	-	Transmitter Head
TRL	-	Tank Radar L (First generation)
TRL/2	-	Tank Radar L/2
VAC	-	Volts Alternating Current
VDC	-	Volts Direct Current

1 Introduction to the TankRadar L/2 System

The TankRadar L/2 System is a monitoring and control system for tank level gauging. The system can interface various sensors, such as temperature and pressure sensors, for complete inventory control.

There is a distributed intelligence in the various units of the system. The units continuously collect and process information. When a request for information is received an immediate response is sent with updated information. The units communicate with each other on a field bus, the TRL/2 Bus.

No part of the equipment is in actual contact with the product in the tank and the antenna is the only part of the gauge that is exposed to the tank atmosphere. The Radar Tank Gauge sends microwaves towards the surface of the product in the tank. The level is calculated based on the echo from the surface.

TankRadar L/2 can measure the level of almost any product, including bitumen, crude oil, refined products, aggressive chemicals, LPG and LNG, etc. Using a suitable Tank Connection Unit, the TankRadar L/2 System can gauge any type of tank.

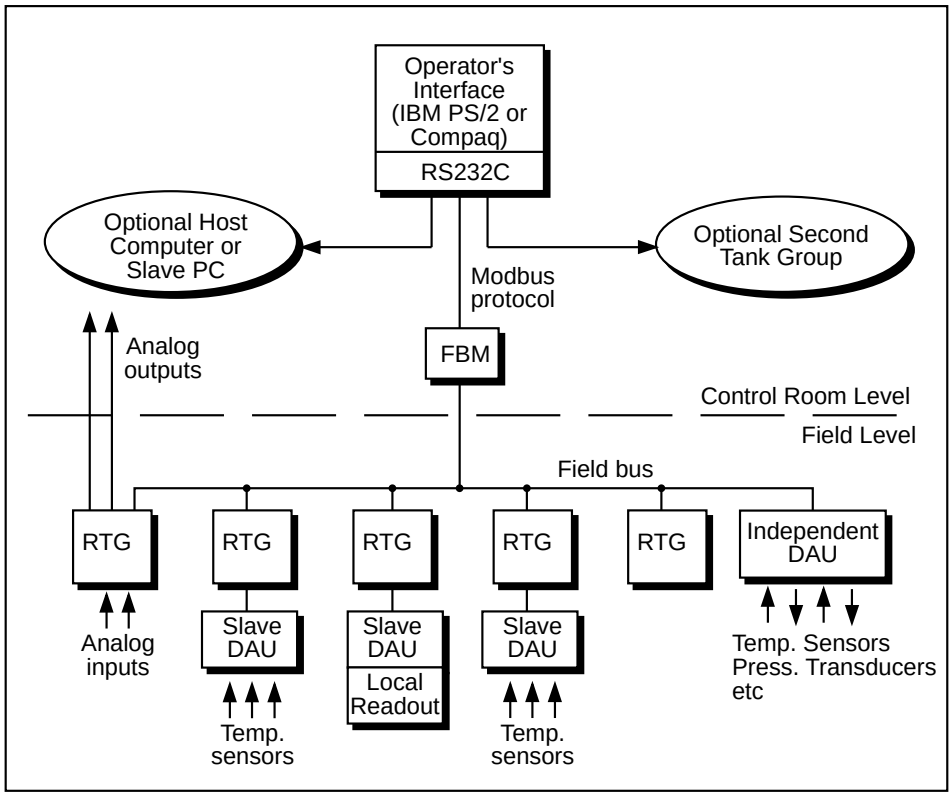

Figure 1.1. Example of a small TankRadar L/2 System.

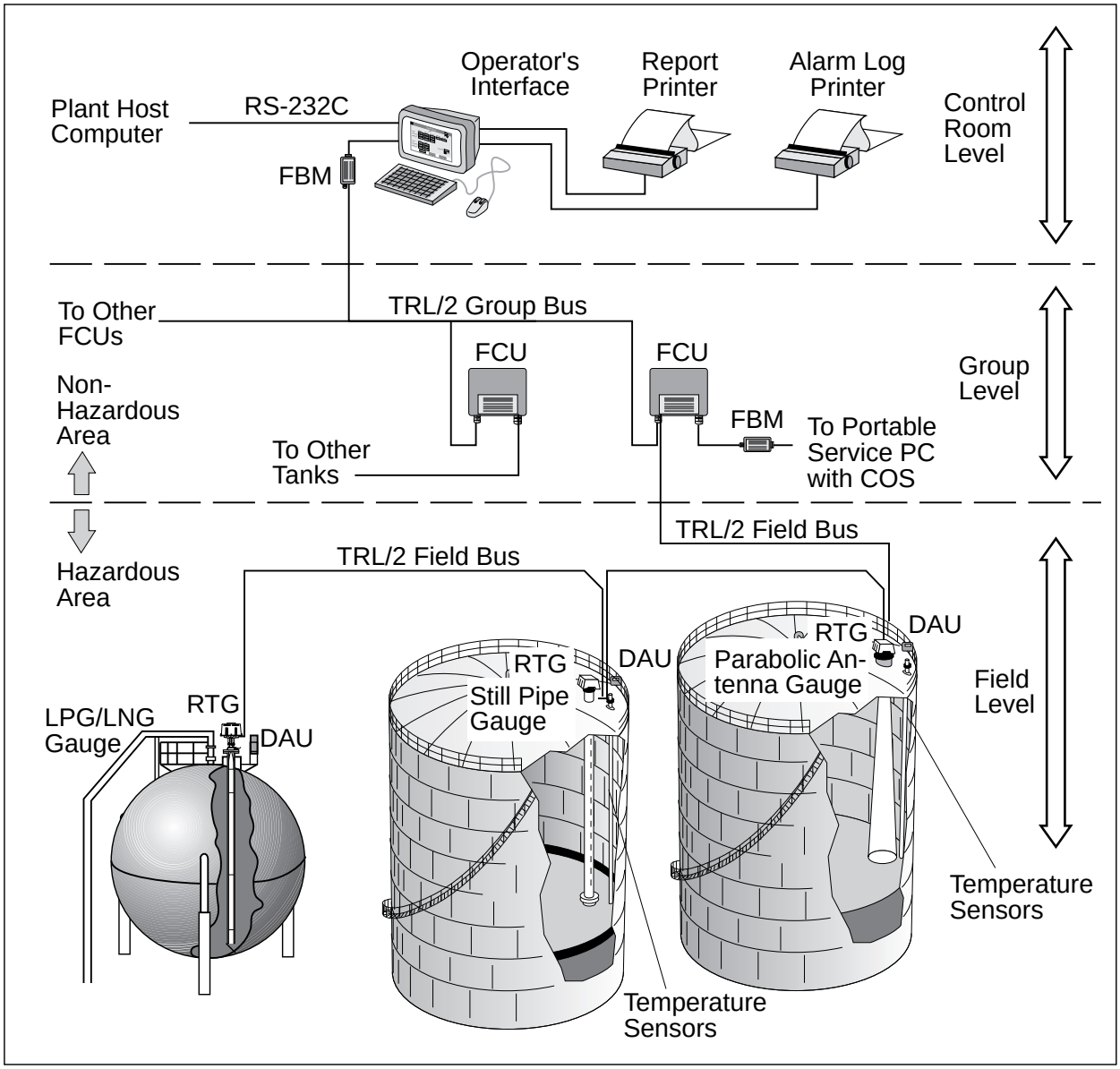

Figure 1.2. Example of a general configuration of a TankRadar L/2 System.

All the measured data is presented to the operator by the Operator's Interface, which in its complete version contains inventory functions. A plant host computer can be connected for further processing of data.

All Saab Tank Control supplied parts for tank top mounting weigh less than 25 kg (55 lb) (except for pressure flange etc. for the LPG/LNG Gauge). This makes it possible for one man to carry the various TankRadar parts to the tank top for installation.

Please read the Technical Description for a more detailed description of the Saab TankRadar L/2 system.

The basic parts of the TankRadar L/2 System are:

- The **Radar Tank Gauge, RTG**, is an intelligent explosion protected instrument for measuring the level of a product inside a tank. Four different Tank Connection Units can be attached in order to satisfy a variety of different applications.
- The **Data Acquisition Unit, DAU**, can interface various external sensors and actuators. There are two versions of the DAU, the Slave DAU and the Independent DAU. The Slave DAU can measure temperature while the Independent DAU, in addition to temperature measurement , has analog and digital inputs. Both versions can, as an option, be equipped with a LCD-display for local readout of the measured values.
- The **Field Communication Unit, FCU**, acts as a gateway and data concentrator between the Group Bus and the Field Bus. Each FCU can have a total of 32 RTGs and 32 DAUs connected to it.
- The **Field Bus Modem, FBM**, is a converter between RS-232C and the TRL/2 Bus. It is used for connecting a PC with OPI (or COS) to the TRL/2 Bus.
- The **Operator's Interface, OPI**, is a software for presenting the values measured in the TRL/2 system. The Operator's Interface is also used to set alarm limits, perform setups, configuration and calibration of the TRL/2 System.
- The **Configuration Software**, **COS**, is normally used on a portable Service PC, operating under DOS. The Service PC can be connected to one of the FCUs Group Bus ports or directly to the Field Bus via an FBM. It is used for service, configuration and calibration purposes. It is not a substitution for the more powerful OPI.

2 Safety

TankRadar L/2 equipment is often used in areas where flammable materials are handled and where an explosive atmosphere may be present. To protect both the plant and the personnel, precautions must be taken to ensure that this atmosphere cannot be ignited. These areas are called hazardous areas and equipment within these areas must be explosion protected.

A number of different explosion protection techniques have been developed over the years. Intrinsic safety and explosion proof (or flame proof) safety are two techniques.

2.1 Intrinsic Safety

Intrinsic safety, IS, is based on the principle of restricting electrical energy available in hazardous-area circuits such that any sparks or hot surfaces, that may occur as a result of electrical faults in components, are too weak to cause ignition. Intrinsic safety is the only technique accepted for Zone 0 hazardous areas. It is also safe for personnel and allows equipment to be maintained without the need for a gas-free certificate.

For example, the temperature measurement of the DAUs is intrinsically safe.

The basic principles of intrinsic safety are:

- All flammable materials are grouped according to the energy needed to ignite them.
- Equipment located in hazardous areas are classified according to the maximum surface temperature that it can produce and this must be safe with the flammable gases that may be present.
- Hazardous areas are classified according to the probability that an explosive atmosphere is present, and this dictates whether or not a particular explosion protection technique may be used.

Important!

For trouble shooting and repair work of components in or in connection to intrinsically safe equipment, strict observance of the following rules is necessary:

- *Disconnect the power supply to the Radar Tank Gauges or the Independent Data Acquisition Units.*
- *Use a certified battery operated instrument only.*
- *Use Saab original spare parts only. Replacement with non-original spare parts may jeopardize the intrinsic safety.*

2.2 Explosion Proof

Explosion proof enclosures can be used when an explosion can be allowed inside the enclosure as long as it does not spread to the outside of it. The enclosure must be strong enough to withstand the pressure and must have narrow gaps to allow the pressure to escape without igniting the atmosphere outside of the equipment.

Important!

Any substitution to non-recognized parts may impair intrinsic safety.

The explosion-proof (flame-proof) enclosures of the Transmitter Head and the Independent Data Acquisition Unit must not be opened while the units are powered.

2.3 Specific FCC Requirements (US market only)

Saab TankRadar L/2 generates and uses radio frequency energy. If it is not installed and used properly, that is, in strict accordance with the manufacturer's instructions, it may violate FCC regulations on radio frequency emission.

Saab TankRadar L/2 has been FCC certified under test conditions which assume a metallic tank. Installation on a non-metallic tank is not certified, and is not allowed.

The FCC certificate for TankRadar L/2 requires that the tank is closed as far as emitted radio energy is concerned. Tanks with open manholes, external-floating-roof tanks without still pipes etc. are not covered by the certificate.

To ensure that no installations are made against the FCC rules, the additional list in Appendix 5 of Tank Data at the end of this manual must be completed and returned to Saab Tank Control for evaluation and approval.

3 Description of the Radar Tank Gauges

Depending on the type of tank connection unit that the Transmitter Head is mounted on, there are four types of Radar Tank Gauges:

- The **Horn Antenna Gauge, RTG 2920**, for fixed roof installation without still pipe.
- The **Still Pipe Gauge, RTG 2940**, for measuring in still pipes.
- The **Parabolic Antenna Gauge**, **RTG 2930**, for demanding environments without still pipe.
- The **LPG/LNG Gauge, RTG 2960**, for liquid gas, LPG and LNG.

3.1 Transmitter Head

The same Transmitter Head is used on all four types of Radar Tank Gauges.

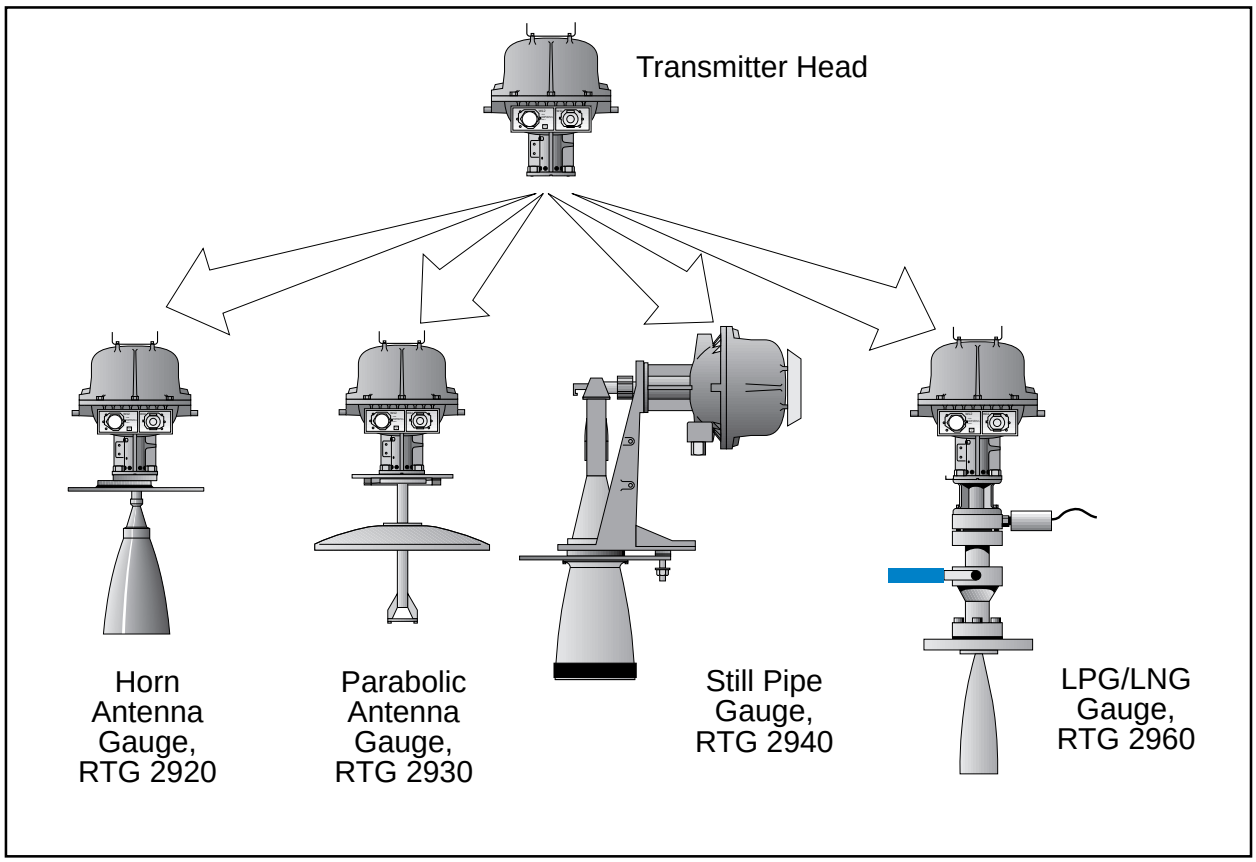

Figure 3.1 shows the Transmitter Head

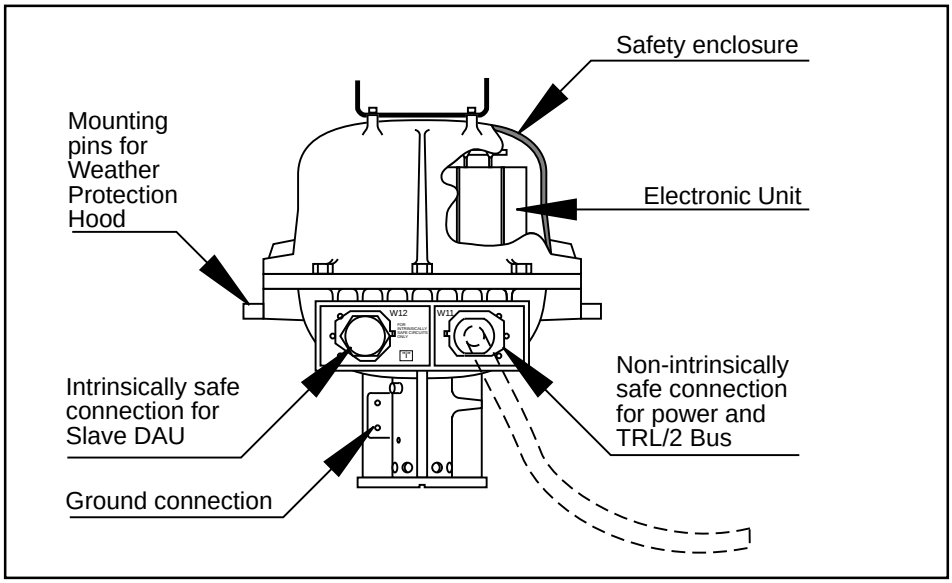

Figure 3.2 shows the Transmitter Head

3.1.1 Electronic Unit

The Electronic Unit is placed inside the safety enclosure of the Transmitter Head. The Electronic Unit includes the microwave unit, and cards for signal processing, data communication, and power supply with transient protection.

A number of options require that cards are included in the Electronic Unit.

3.1.2 Cable Outputs

The Transmitter Head has one or two cable outlets. One is for the non-intrinsically safe power connection and the connection to the TRL/2 Bus. The other is for the intrinsically safe connection of the optional Slave Data Acquisition Unit, and/or the optional analog inputs and outputs of the Current Loop Card. The wires are clearly marked with numbers and the designation of the wires is shown on a printed plate at the cable outputs.

Option	W-12 Connection	Barrier Unit	Current Loop Card
Slave DAU	8-wire lead seal	Required	Not required
Current Loop Card 2 inputs + 2 outputs	12-wire lead seal	Not required	Required
Slave DAU and Current Loop Card 2 inputs + 2 outputs	12-wire lead seal	Required	Required
Current Loop Card 3 inputs + 2 outputs	12-wire lead seal	Not required	Required

Table 3.1. The table describes what is required when the optional Slave DAU and/or the optional Current Loop Card are included.

3.1.3 Power Supply to the Radar Tank Gauge

There is a switch on the Electronic Unit for setting of the power supply to 115 V or 230 V. As standard the switch is set to 230 V.

To select supply voltage, remove the cover of the Safety Enclosure and set the switch on the Electronic Unit to either 115 V or 230 V. See figure 3.3

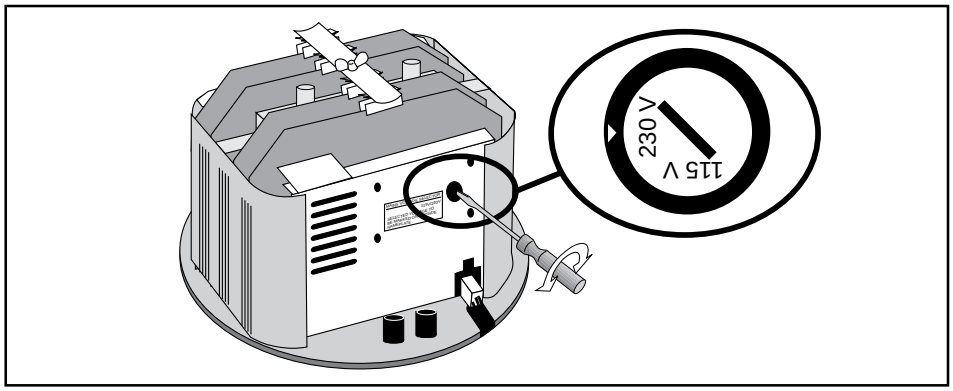

Figure 3.3.

Note: *Do not turn the switch all the way around as it may damage the switch.*

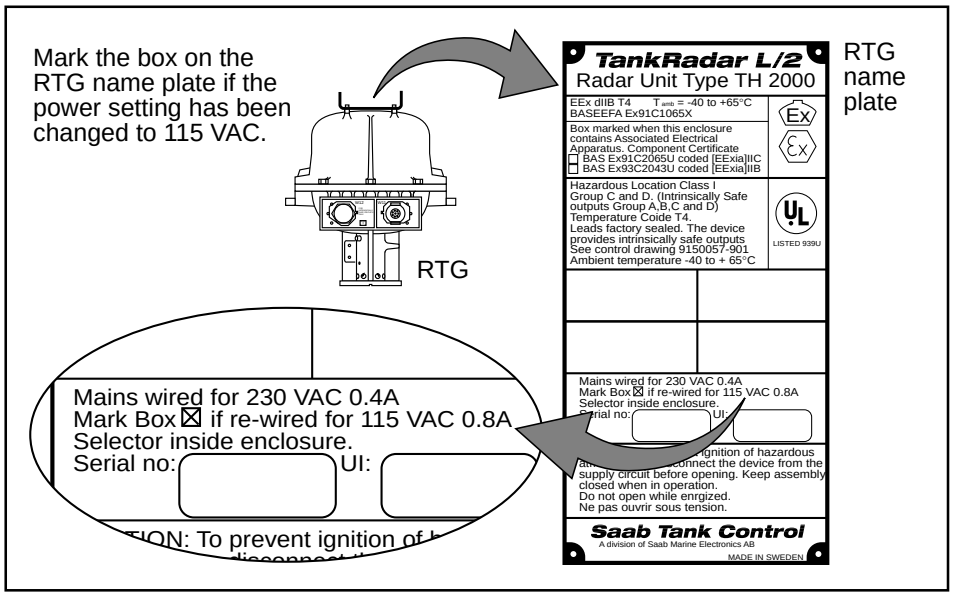

Figure 3.4.

Note: *On the label on top of the Transmitter Head, there is a box that must be marked with an "X" if you set the switch to 115 V. See figure 3.3. Always check this label before connecting power to the Electronic Unit.*

3.1.4 Barrier Unit Card, BU (Option)

The optional Barrier Unit Card is used when a Slave Data Acquisition Unit is connected to a Radar Tank Gauge. It provides intrinsically safe power and communication between the Slave DAU and the RTG. The Barrier Unit is installed inside the Transmitter Head.

The Barrier Unit is connected to the Slave DAU through the Intrinsically Safe Connection W12 on the Radar Tank Gauge.

Note: *Installation of the Barrier Unit Kit, the Current Loop Card or the Metrological Seal may only be done by personnel from Saab Tank Control.*

3.1.5 Current Loop Card, CLC (Option)

The optional Current Loop Card provides intrinsically safe 4-20 mA inputs and outputs. The inputs can be used for example for pressure sensors, while the outputs can be used for pointer instruments or for output of a measured value as an analog signal.

If a Slave DAU is also connected, two 4-20 mA inputs and two 4-20 mA outputs are available. If a Slave DAU is **not** connected, one additional 4-20 mA input is available, although this transducer must have its own intrinsically safe power supply.

When the optional Current Loop Card is used, the JB 12 Junction Box from Saab Tank Control is recommended since the cables are separated inside the box according to the requirements for intrinsic safety. See chapter 7.2.

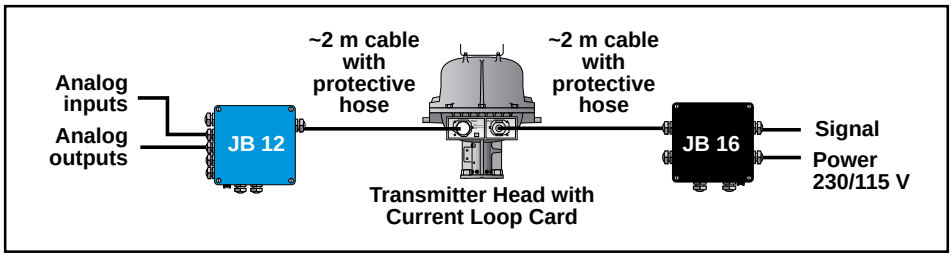

Figure 3.5 shows a Transmitter Head with a Current Loop Card.

3.1.6 Metrological Seal

The Metrological Seal consists of a rod that can activate a write-enable switch from the outside of the Transmitter Head. This rod can be sealed in the write-inhibit position to prevent unauthorized changes in the database.

If there is no Metrological Seal mounted, then the Transmitter Head is always in write-enable mode.

3.1.7 Installation Data for the Transmitter Head

Ambient operating temperature:	-40°C to +65°C (-40°F to +149°F)
Explosion protection	Class 1, Div I, Groups C and D (UL1203, UL913 USA) and EEx d[ia] IIB T4 (EN50014, EN50018 and EN50020 Europe)
Power Supply	115 or 230 VAC, +10% to -15%, 50-60 Hz, max. 80 W
Field bus	TRL / 2 Bus (FSK, half duplex, two wires, galvanically isolated, 4800 Baud)

3.2 Description of the Horn Antenna Gauge, RTG 2920.

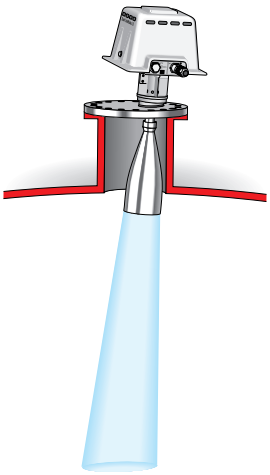

The Horn Antenna Gauge is designed for easy mounting in small size openings on tanks with fixed roof. A flange with a diameter of 8" is enough to mount the RTG 2920.

The RTG 2920 is designed for measurement of a variety of oil products and chemicals except for bitumen / asphalt and similar products where the Parabolic Antenna Gauge RTG 2930 is recommended.

The wide beam of the Horn Antenna Gauge is a disadvantage in narrow tanks with internal structures. In such cases the Parabolic Antenna Gauge is generally recommended.

The Horn Antenna Gauge is delivered with one of two types of flanges. One flange is for straight mounting. The other flange is used for inclined mounting.

See also chapter 10.1 for installation requirements for the Horn Antenna Gauge.

3.2.1 Installation Data for RTG 2920

Operating temperature in tank	Max. +150°C (+300°F) Min. -40°C (-40°F)
Measuring range	0.85 to 30 m below flange (2.7 to 66 ft.)
Pressure	-0.5 to 2 bar
Total weight	Appr. 20 kg (44 lbs.)
Socket size	Min. 8"

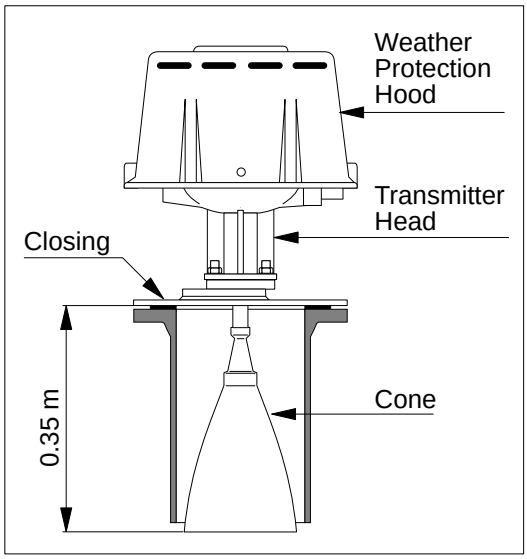

Figure 3.6 shows the Horn Antenna Gauge.

3.3 Description of the Parabolic Antenna Gauge, RTG 2930

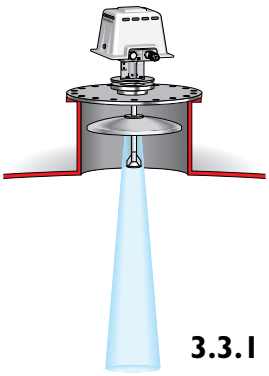

The Parabolic Antenna Gauge RTG 2930 measures level of all types of liquids, from light products to bitumen / asphalt. The gauge is designed for mounting on tanks with fixed roofs and has custody transfer accuracy.

The design of the parabolic antenna provides extreme tolerance against sticky and condensing products.

See also chapter 10.2 for installation requirements for the Parabolic Antenna Gauge.

3.3.1 Installation Data for RTG 2930

Operating temperature in tank	Max. +230°C (+445°F)
Measuring range	0.8 to 40 m below flange (2.7 to 131 ft.)
Pressure	-0.5 to 2 bar
Total weight	Appr. 25 kg (55 lbs.)
Socket size	Min. 20"

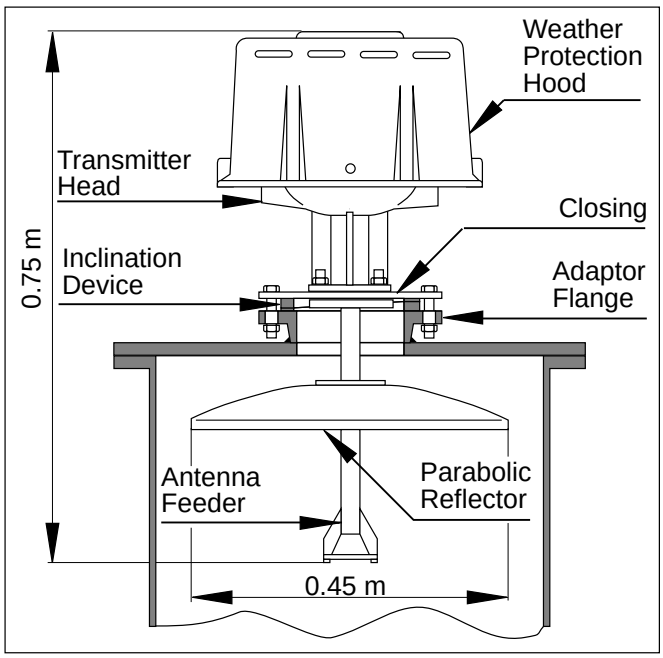

Figure 3.7 shows the Parabolic Antenna Gauge.

3.4 Description of the Still Pipe Gauge, RTG 2940

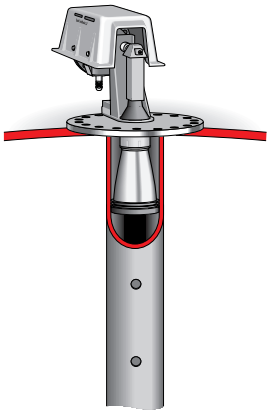

The Still Pipe Gauge is used on tanks with still pipes and with all products suited for still pipes.

The gauge uses a low-loss radar propagation mode which virtually eliminates the influence of the still pipe condition. Measurement is made with highest accuracy even when the pipe is old, rusty and covered with deposits.

The Still Pipe Gauge fits 6", 8", 10" and 12" pipes. It can be mounted on an existing still pipe and there is no need to take the tank out of operation during installation.

See also chapter 10.3 for installation requirements for the Still Pipe Gauge.

3.4.1 Installation Data for RTG 2940

Operating temperature in tank	Max. +230°C (+445°F)
Measuring range	0 to 40 m from cone end (0 to 131 ft.)
Pressure	-0.2 to +0.5 bar
Total weight	Appr. 20 kg (44 lbs.)
Still pipe dimension	6", 8", 10" or 12". See table 10.1 for information on schedules.

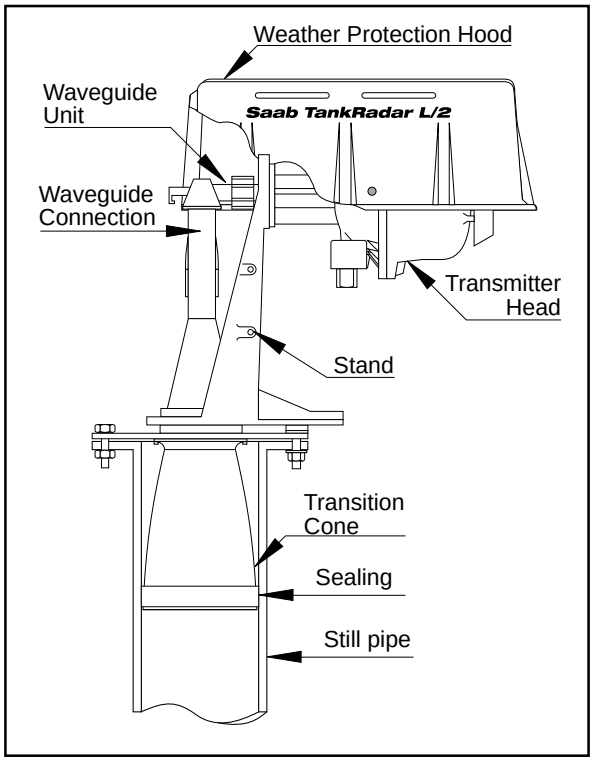

Figure 3.8 shows the Still Pipe Gauge.

3.5 Description of the LPG/LNG Gauge, RTG 2960

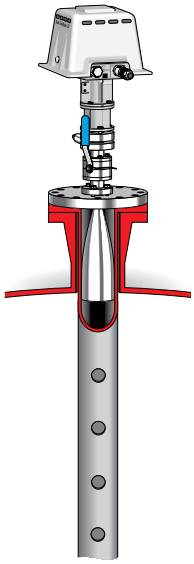

The RTG 2960 is designed for level measurement in LPG and LNG tanks. A still pipe is required for the measurement. It prevents a wavy or boiling surface from disturbing the measurement. Radar signals are transmitted inside the pipe towards the surface.

The pressure sealing is a quarts window approved for use in pressure vessels. As standard the gauge is also equipped with a fire-proof block valve and a vapor space pressure sensor.

The LPG / LNG Gauge is available in three different versions, a 150 PSI version, a 300 PSI version and a 600 PSI version.

The patented reference pin function enables verification of measurement without opening the tank. There is a Reference Pin at the top of the still pipe and a Reference Plug made of epoxy resin at the bottom. If epoxy can not be used in the tank, two or three reference pins can be used without the Reference Plug. By setting the gauge into "test mode" it measures against these references and compares with the actual distances to these references that were stored during installation.

See also chapter 10.4 for installation requirements for the LPG / LNG Gauge.

3.5.1 Installation Data for RTG 2960

Operating temperature in tank	Stainless steel flange -66°C to + 90°C (67°F to 194°F)
Measuring range	0 to 40 m from cone end (0 to 131 ft.)
Pressure	Up to 25 bar (375 PSI)
Still pipe dimension	4" Sch. 10 or 100 mm inner diameter.
Total weight	150 PSI – appr. 38 kg (84lbs) 300 PSI – appr. 48 kg (106 lbs) 600 PSI – appr. 68 kg (150 lbs)

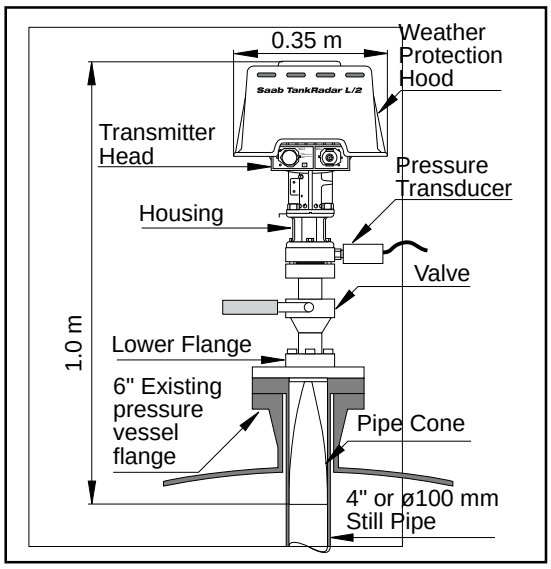

Figure 3.9 shows the LPG/LNG Gauge.

4 Description of the Data Acquisition Units

The Data Acquisition Unit, DAU, is a complement to the Radar Tank Gauge and it can interface various external sensors and actuators. There are two versions of the DAU, the Slave DAU and the Independent DAU. Both types have interfaces for temperature measurement.

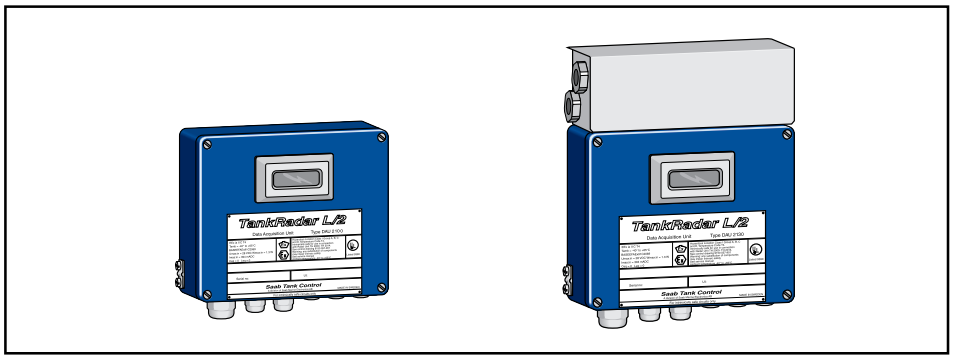

Figure 4.1 shows the Slave DAU and the Independent DAU.

4.1 Connection of the Sensors

The DAUs can connect up to 14 RTDs (Resistance Temperature Detectors) on the X21 terminal on the motherboard. See figure 4.2.

Under the lid of the Data Acquisition Unit there are instructions printed as to how to connect the sensors and transducers.

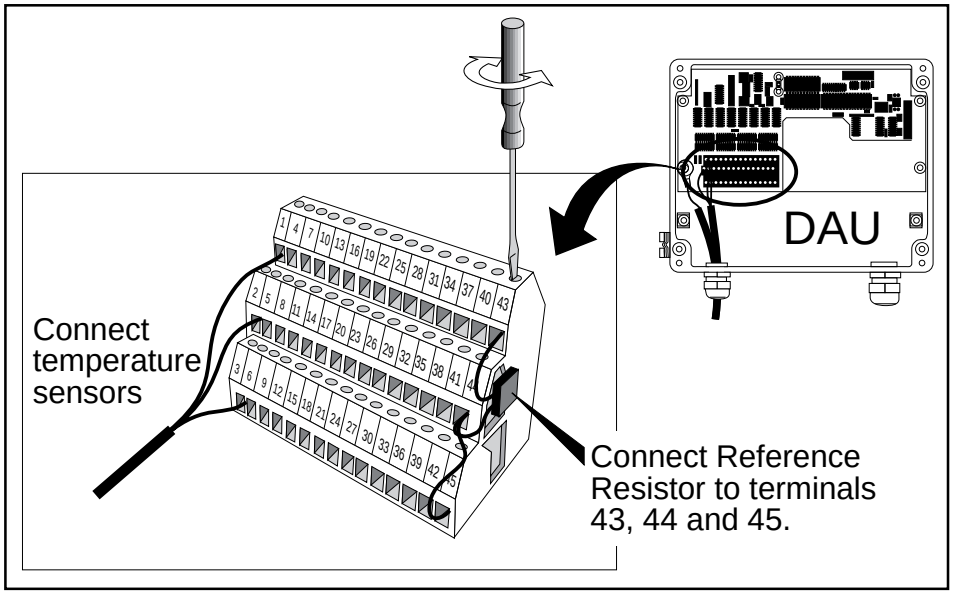

Figure 4.2 shows the wire terminals for the temperature sensors.

4.2 Selecting the Temperature Range

The multiplexer for the RTDs has two different amplification factors which are jumper selected. It is also possible to provide an offset to the measured signal by adding a current to it. The amplification is selected on the X1 and X2 and the offset is selected on the X3 according to the table in figure 4.3. The standard setting is from -50°C to +125°C. The database setting of the temperature range in the Operator's Interface (OPI) or the Configuration Software (COS) must correspond to the setting of the jumpers.

A high precision reference resistor must be connected to the X21 terminal to positions 43, 44 and 45. Depending on the temperature range stated in the Required System Information form, one out of three different reference resistors is chosen and connected. See figure 4.2 and spare parts list in the Service Manual.

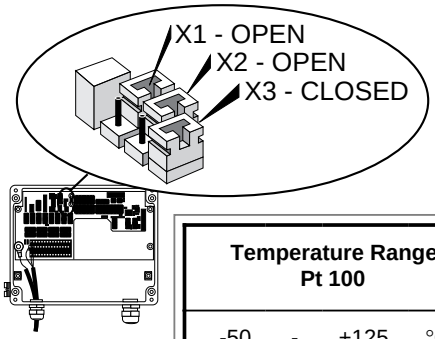

Temperature Range Pt 100	X1	X2	X3
-50 - +125 °C	OPEN	OPEN	CLOSED
-50 - +300 °C	CLOSED	CLOSED	CLOSED
-200 - +150 °C	CLOSED	CLOSED	OPEN

Figure 4.3 shows the selection of temperature range.

4.3 Local Readout Display

Both versions can, as an option be equipped with a Local Readout Display showing the product level as well as the parameters measured by the DAU itself.

Installation data for Local Readout Display

Ambient operating temperature: -30°C (-22°F)

4.4 Write Enable/Inhibit Switch

In order to enable programming of the EEPROM, the S1 switch must be set in the position, towards the block terminals. The switch can be locked and sealed in the write inhibit position using a wire through the clevis pins. See figure 6.3.

4.5 Common Installation Data for Both DAUs

Ambient operating temperature:	-40°C to +65°C (-40°F to +149°F)
Temperature Sensors	Pt 100 or Cu 100
Number of sensor elements	Max. 14 per DAU
Temperature measuring range	Range 1: -50 to +125 °C Range 2: -50 to +300 °C Range 3: -200 to +150°C

4.6 Description of the Slave Data Acquisition Unit, DAU 2100

The Slave DAU is intrinsically safe and is connected to the Radar Tank Gauge on the same tank. It receives its power supply and communicates via the Barrier Unit Card in the Radar Tank Gauge.

4.6.1 Installation Data for DAU 2100

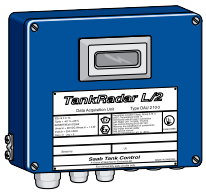

Explosion protection	Class 1, Div I, Groups A,B,C and D (UL913 USA) and EEx ia IIC T4 (EN50020 Europe)
Power Supply	Intrinsically safe supply from Radar Tank Gauge
Field bus	Intrinsically safe local line from Radar Tank Gauge

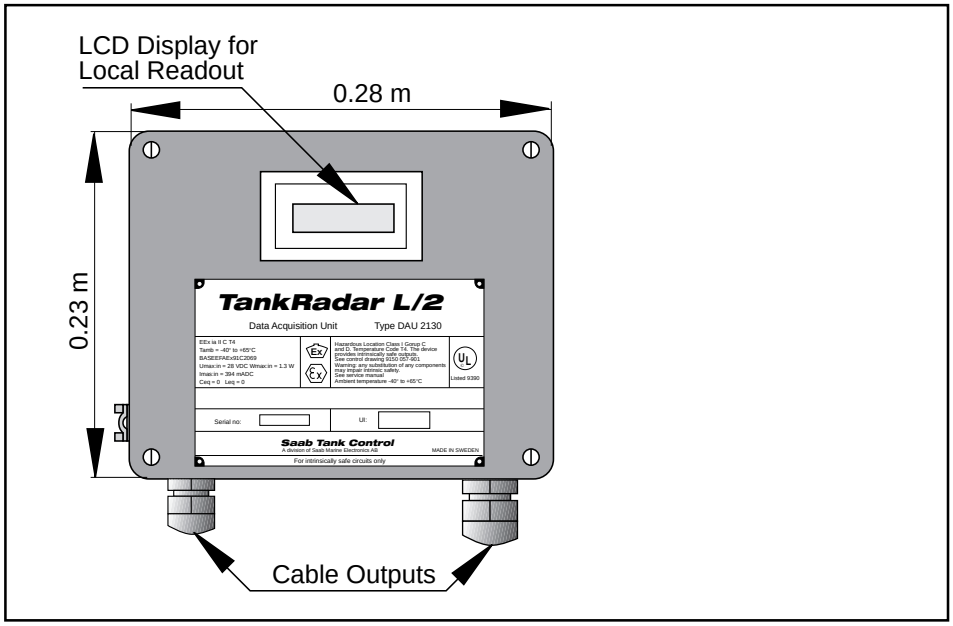

Figure 4.4 shows the Slave Data Acquisition Unit.

4.7 Description of the Independent Data Acquisition Unit

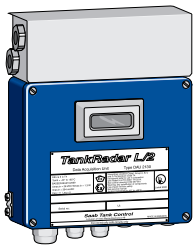

Warning: *The DPS board inside the flameproof enclosure of the Independent DAU contains powered circuits on easily accessible components.*

In addition to the temperature measurement, the Independent DAU has four analog inputs and eight digital inputs as well as four relay outputs. The Independent DAU communicates directly on the TRL / 2 Bus.

4.7.1 Power Supply

Power supply voltage to the Independent DAU is selected as either 115 V or 230 V. The voltage is selected by jumpers in X5, a 4-pole screw terminal. The jumper is set to 230 V as standard. See figure 4.5.

Note: *The setting of the voltage is marked on the nameplate. If the switch is set to 115 V, mark the box on the nameplate: "Mark box If re-wired for 115 VAC".*

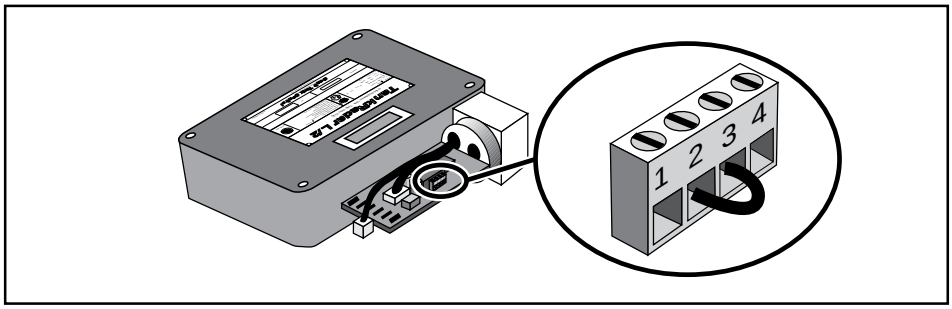

Figure 4.5 shows the voltage setting. Set 2-3 for 230 VAC. Set 1-2 and 3-4 for 115 VAC.

4.7.2 Relays (Optional)

There are four relays on the Independent DAU. The relays can be activated by the level measured by the associated RTG or by any of the parameters measured by the Independent DAU itself.

The optional relays of the Independent DAU can be selected as either normally open or normally closed. This is done by setting a two way cable connector in alternative positions in a three pin header connector. See figure 4.6.

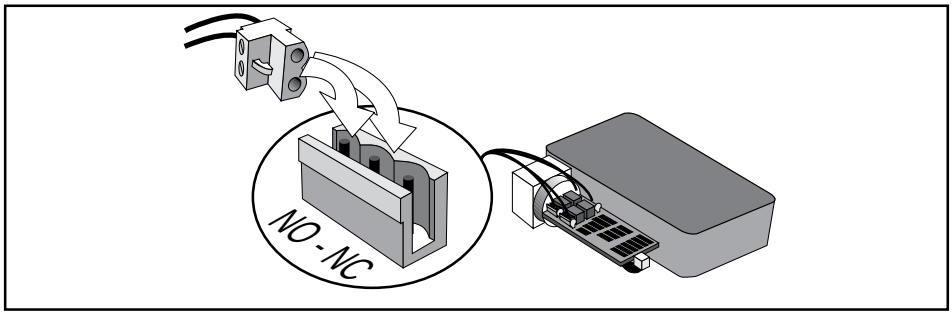

Figure 4.6. Plug connector in appropriate position for normally open or normally closed operation of the relay.

4.7.3 Installation Data for DAU 2130

Explosion protection	Class 1, Div I, Groups C and D (UL1203, UL913 USA) and EEx d[ia] IIB T4 (EN50014, EN50018 and EN50020 Europe)
Power Supply	115 or 230 VAC, +10% to -15%, 50-60 Hz, max. 10 W
Field bus	TRL/2 Bus (FSK, half duplex, two wires, galvanically isolated, 4800 Baud)
Current inputs	4-20 mA. Intrinsically safe.
Number of current inputs	Max. 4, multiplexed, only one is powered at a time
Number of status and frequency inputs	Max. 8. Intrinsically safe.
Number of relay outputs	Max. 4
Relay contact rating	250 VAC / 5A (resistive load)

5 Description of the Field Bus Modem, FBM 2170

The **Field Bus Modem, FBM**, is a converter between RS-232C and the TRL/2 Bus. It is used for connecting a PC with OPI (or COS) to the TRL/2 Bus.

Note: *No explosion protection is provided, so the Field Bus Modem must be installed in a non-hazardous area.*

5.1 Installation Data for FBM 2170

Power supply	From AC/DC converter supplied by Saab Tank Control. 6-15 V, 10 mA).
Cable to PC	Supplied by Saab Tank Control
Explosion protection	None

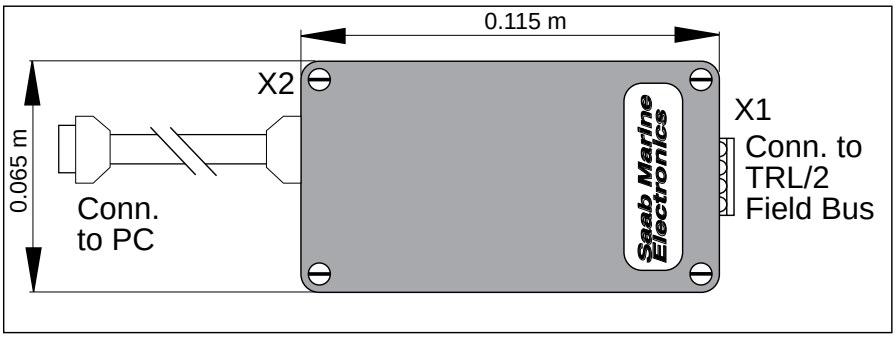

Figure 5.1 shows the Field Bus Modem.

6 Description of the Field Communication Unit, FCU 2160

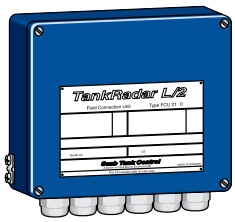

The Field Communication Unit continuously polls data from the Radar Tank Gauges and the Data Acquisition Units and stores it in a buffer memory. The Field Communication Unit is the master on the Field Bus but acts as a slave on the Group Bus.

Note: *No explosion protection is provided, so the Field Communication Unit must be installed in a non-hazardous area.*

6.1 Communication Ports

The Field Communication Unit has six communication ports, X1 to X6. The ports can be individually configured as either Group Bus or Field Bus ports. There can be maximum four Group Buses or four Field Buses at the same time. Maximum configuration can be 2+4, 3+3 or 4+2 buses of each kind. However, ports X5 and X6 are never configured as Field Bus ports, while the X1 and X2 ports are never configured as Group Bus ports.

As standard the Field Communication Unit is delivered with six FCM interface boards for four Field Bus ports and two Group Bus ports.

The table below shows the maximum configurations of an extended FCU:

Ports:	**X1**	**X2**	**X3**	**X4**	**X5**	**X6**
Alternative 4+2:	FB	FB	FB	FB	GB	GB
Alternative 3+3:	FB	FB	FB	GB	GB	GB
Alternative 2+4:	FB	FB	GB	GB	GB	GB

There are also two jumper connectors delivered with each unit. These can be connected to the X5 and / or X6 for RS-232C Group Bus communication. See figure 6.1.

Any of the FCM interface boards can be replaced with FCI interface boards for RS-485 communication.

Note: *The wire terminals 1 and 3 respectively 2 and 4 on FCM board connector are parallel connected. See installation drawing.*

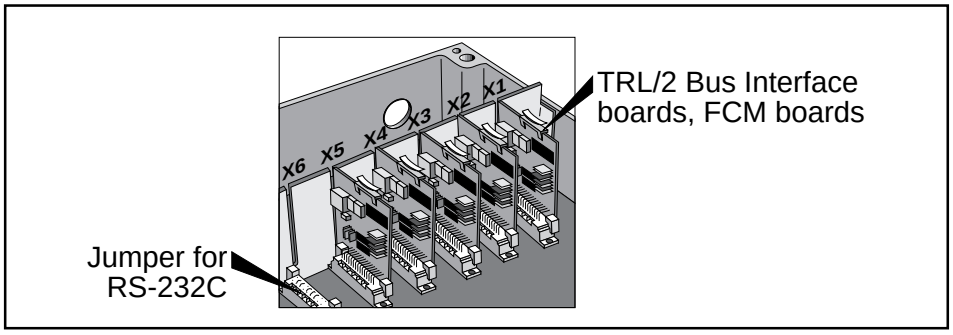

Figure 6.1 shows the bus ports on the Field Communication Unit.

6.2 FCU Enclosure

As standard the Field Communication Unit is shipped in a weather protected, wall-mounted box of the same type as the Data Acquisition Unit. The Field Communication Unit is built on a Printed Circuit Board and may be delivered as such for mounting within a customer supplied enclosure.

6.3 FCU Power Supply

There is a switch to select the supply voltage to either 115 V or 230 V. The switch is set to 230 V as standard. See figure 6.2.

If the switch is set to 115 V, mark the box on the nameplate: “Mark box If re-wired for 115 VAC”.

NOTE: *Do not turn the switch all the way around as it may damage the switch.*

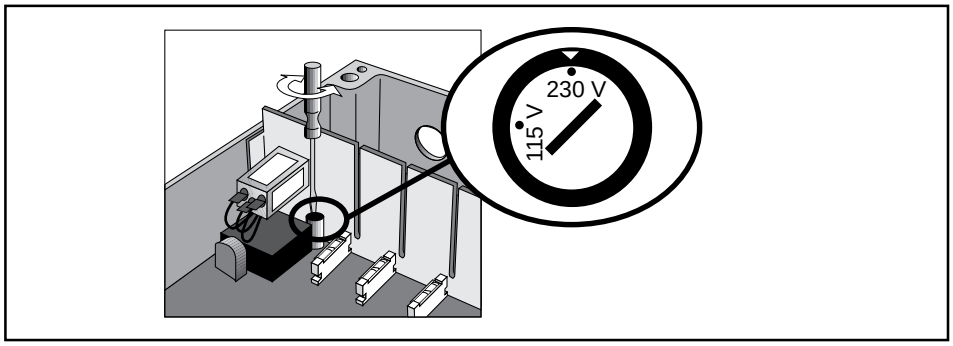

Figure 6.2. Setting of the supply voltage to the FCU.

6.4 Write Inhibit/Enable Switch

There is a write inhibit switch in the FCU. It can be locked in the write inhibit position by securing a locking plate with a wire through the clevis pins, see figure 6.3.

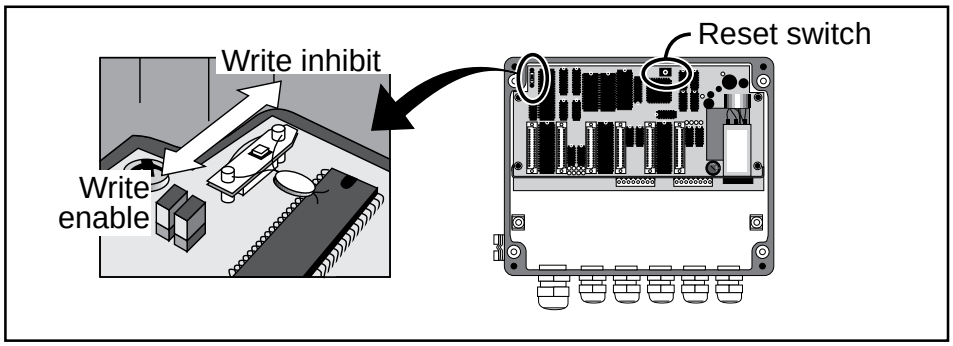

Figure 6.3. Write enable/inhibit switch.

6.5 Installation Data for FCU 2160

Ambient operating temperature:	-40°C to +65°C (-40°F to +149°F)
Power Supply	115 or 230 VAC, +10% to -15%, 50-60 Hz, max. 80 W
Group bus interface	TRL/2 Bus, RS-232 or RS-485
Field bus interface	TRL/2 Bus. Max 16 units on one port
Ambient operating temperature:	-40°C to +65°C (-40°F to +149°F)
Explosion protection	None
Number of RTGs and/or Independent DAUs	Max. 32 RTGs and 32 DAUs

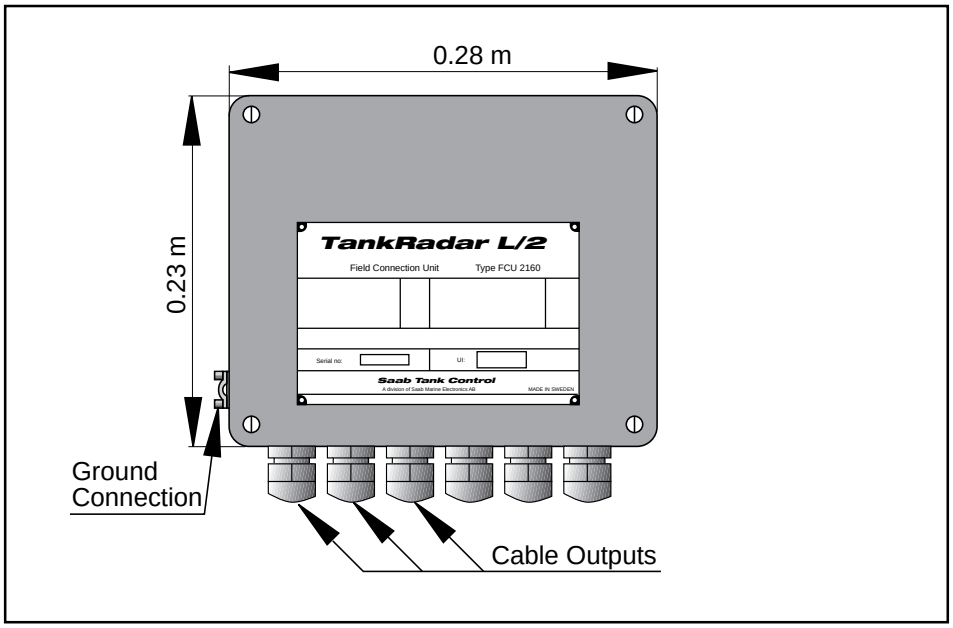

Figure 6.4. The Field Communication Unit.

7 Description of the Junction Boxes

Saab Tank Control can supply a series of junction boxes for the connection of the various units in the TankRadar L/2 system.

7.1 Junction Box JB 8 for Connection of RTG to Slave DAU

The JB 8 should only be used for intrinsically safe connections. It is used when a Slave DAU is located more than 1.6 m away from the RTG. It contains eight terminals, two holes for PG 16 glands, one PG 16 gland for cable diameter 11-15 mm.

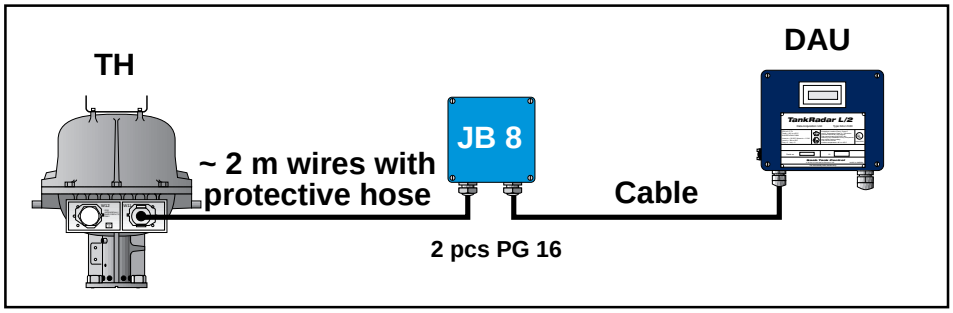

Figure 7.1 shows the JB 8 Junction Box.

7.2 Junction Box JB 12 for Connection of RTG (with CLC) to Slave DAU

The JB 12 should only be used for intrinsically safe connections. It is used when a Current Loop Card is included in the RTG. It contains 12 terminals, various holes for glands from PG 13.5-PG 16. Six glands PG 13.5 for cable diameters 11-15 mm are included. See also chapter 3.1.5.

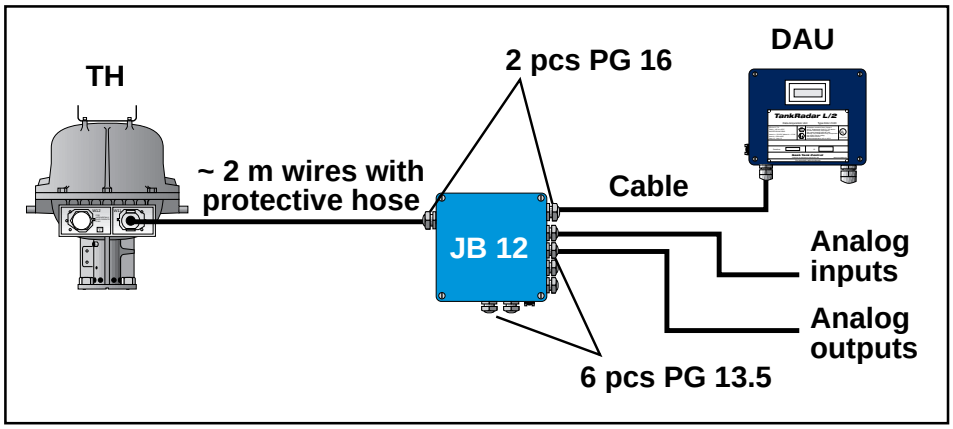

Figure 7.2 shows the JB 12 Junction Box.

7.3 Junction Box JB 16 for Connection to RTG and Independent DAU

The JB 16 is an EEx "e" approved junction box, used for connecting power and TRL/2 Bus to the RTG and the Independent DAU. It contains 16 terminals, a flexible hose for the cabling to the RTG or DAU, a mounting plate and various holes for glands from PG16-21. Four glands are included for cable diameters 8-18 mm.

7.4 Junction Box JB 36 for Connection of Temperature Sensors

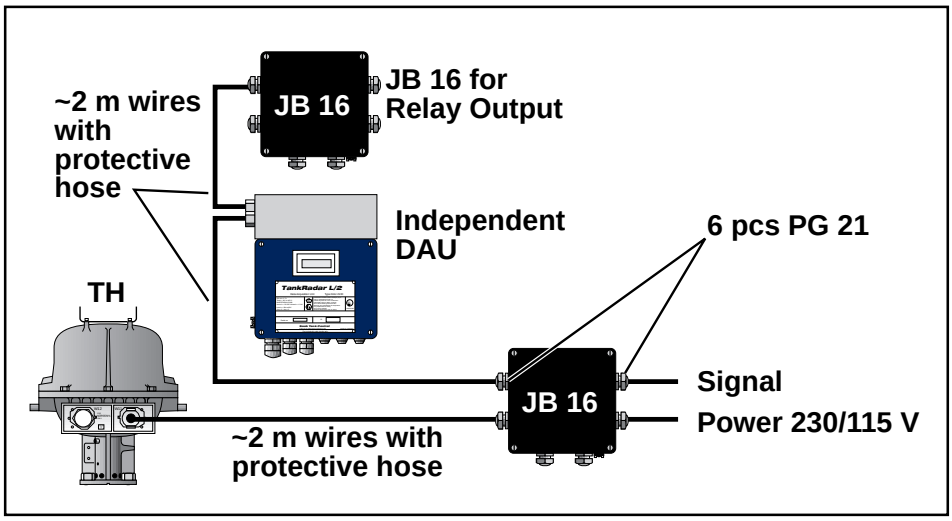

Figure 7.3 shows the JB 16 junction Box.

The JB 36 is used for the intrinsically safe connection of up to 14 temperature sensors to a DAU.

8 Connection to a Plant Host Computer (Plant DCS)

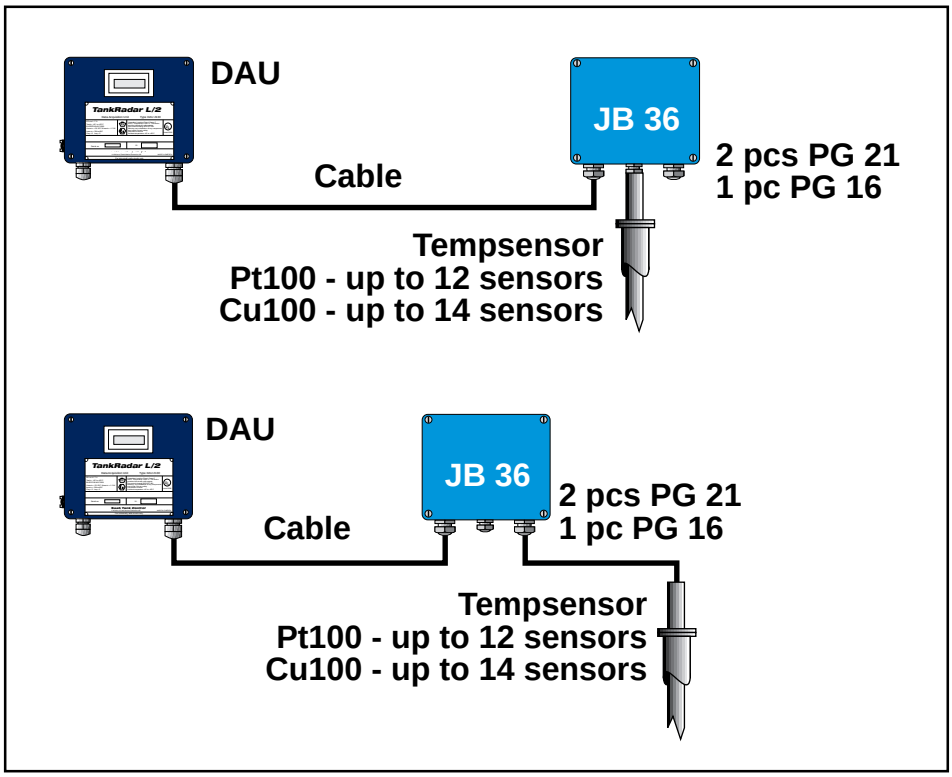

Figure 7.4 shows two alternative connections of the JB 16 Junction Box.

A host computer can be connected either to a PC with OPI Software or directly to the Field Communication Units (FCUs).

The TRL/2 system can be connected to all major DCS systems, such as Foxboro, Honeywell, Rosemount and Yokogawa. New interfaces can be developed on request. For a complete list of the available interfaces, please contact Saab Tank Control or one of its representatives.

8.1 Connect to the FCU for Quick Updates

When a host computer is connected to one or several FCUs, measured data such as level, average temperature, pressure, etc. can be transferred to the host system. If the host system has inventory functions, a connection directly to the FCUs is recommended.

8.2 Connect to OPI/2 for Inventory Data

When a host computer is connected to the OPI/2, calculated data such as volume, mass and density can be communicated in addition to the measured data mentioned in chapter 8.1 above.

9 Installation Schedule

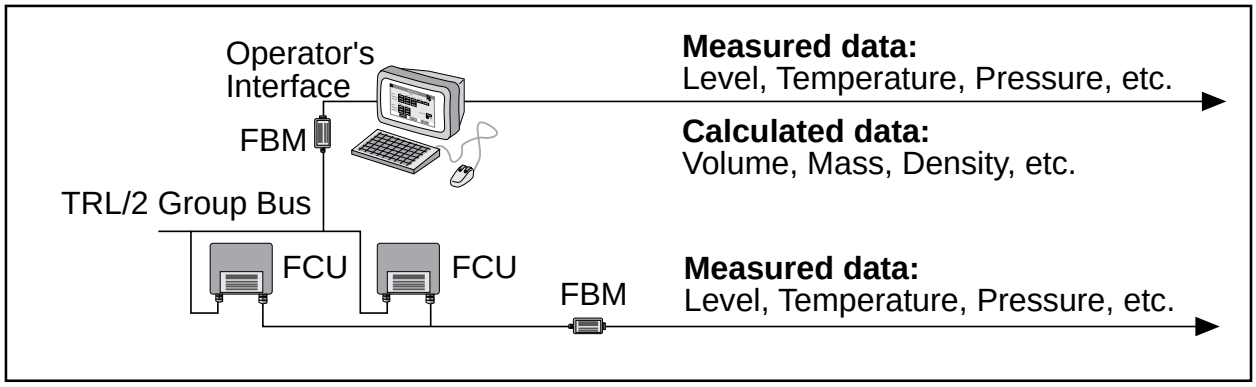

Figure 8.1 shows two different ways of connecting a host computer to the TRL/2 system.

1. Customer receives the Installation Manual with the Required System Information Form.
2. The completely filled in Required System Information Form, tank farm layout drawings and cabling drawings are sent to Saab Tank Control representative 1-3 months prior to delivery, depending on system size.
3. The Installation drawings are reviewed and approved by Saab Tank Control or Saab Tank Control representative. Allow approximately 2 weeks for review and return.
4. Inspection at Saab Tank Control before delivery (when requested).
5. Customer receives and installs the TRL/2 System according to the Installation Manual.
6. Data sheets are completed and a system configuration chart are made by the customer as a preparation for the start up of the system. See Service Manual for instructions.
7. System is started up by customer (after completed training) or a Saab Tank Control Representative according to Service Manual.
8. Send Commissioning Check List to Saab Tank Control.

10 Requirements on the Installation of the Radar Tank Gauges

To achieve precise and trouble free measurement, it is very important to mount the Radar Tank Gauge correctly on the tank.

Please note that if an ullage plug is required, it has to be installed separately as there is no ullage plug on the Horn Antenna Gauge or the Parabolic Antenna Gauge.

Note: *Please see the installation drawings for more information. There is a list of drawings in chapter 13.*

10.1 Requirements for the Horn Antenna Gauge, RTG 2920

The Horn Antenna Gauge, RTG 2920, must be installed so that there are no pipes or other obstacles that could prevent the radar beam to reach the bottom unobstructed. Please refer also to the mechanical installation drawing for more information on the installation requirements of the Horn Antenna Gauge.

See installation drawing for requirements on service space.

Note: *Levels closer than approximately 850 mm from the flange, cannot be measured with the highest accuracy.*

10.1.1 Free Space Requirement

The radar beam spreads over 30°. There are two flanges available for the Horn Antenna Gauge. One inclines the gauge 4° and the other is horizontal. See installation drawing for flange dimensions.

If the wall would intrude into the 30° radar beam with a vertical antenna axis, the 4° flange has to be used so that the radar beam is

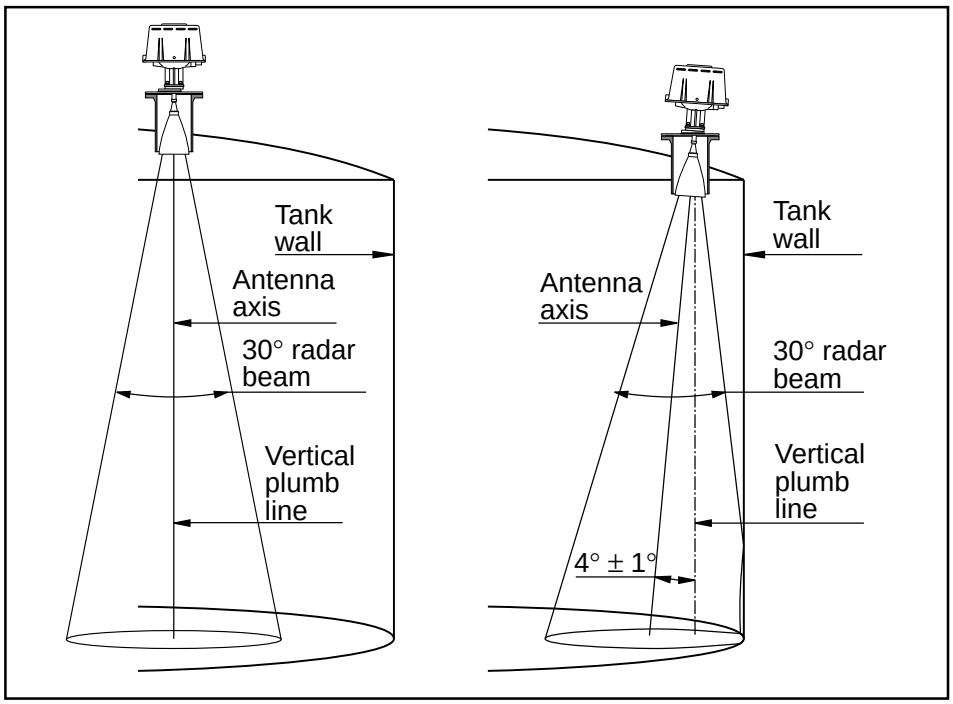

Figure 10.1 shows the free space requirements for the Horn Antenna Gauge.

directed away from the wall. This inclination is necessary to ensure maximum accuracy.

If the wall does not intrude into the 30° radar beam when the antenna axis is vertical, the horizontal flange can be used.

For special cases, where the maximum accuracy is not necessary, the horizontal flange can be used even when the wall intrudes into the radar beam. In doubtful cases, please contact Saab Tank Control or one of its representatives.

10.1.2 Socket Requirement

Maximum height of socket is 330 mm.

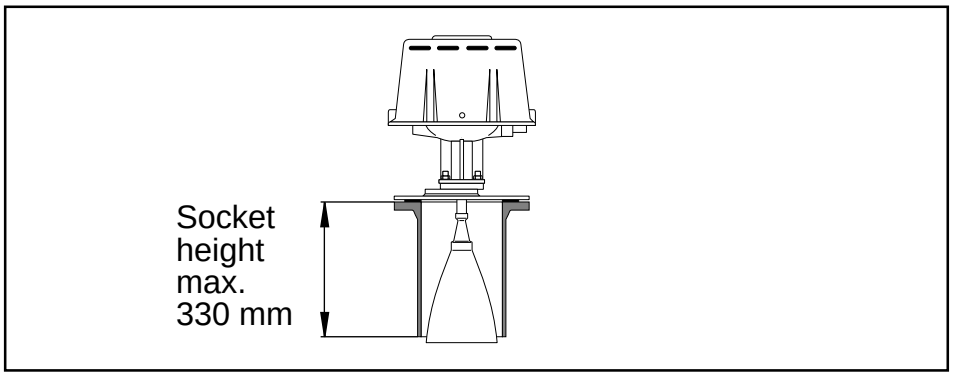

Figure 10.2.

10.2 Requirements for Parabolic Antenna Gauge, RTG 2930

Please refer also to the mechanical installation drawing for more information on the installation requirements for the Parabolic Antenna Gauge.

See also installation drawing for requirements on service space.

10.2.1 Inclination of the Parabolic Antenna Gauge

The radar beam should be directed 1.5° towards the tank center. Generally an Inclination Device must be used to ensure the correct angle of the gauge. However, for products with high condensation, like bitumen / asphalt applications, the radar beam should be directed vertically **without** any inclination towards the tank center.

When the Inclination Device is used the plane of the cover is allowed to lean a maximum of 5.5° away from the tank wall and a maximum of 2.5° towards the tank wall. It must also be horizontal within ± 4° along the tank wall. See figure 10.3.

If the plane of the cover has an inclination of 1°-2° away from the tank wall and is horizontal within 1° along the wall then the Parabolic Antenna Gauge can be directly mounted on the cover without the use of the Inclination Device. See figure 10.3.

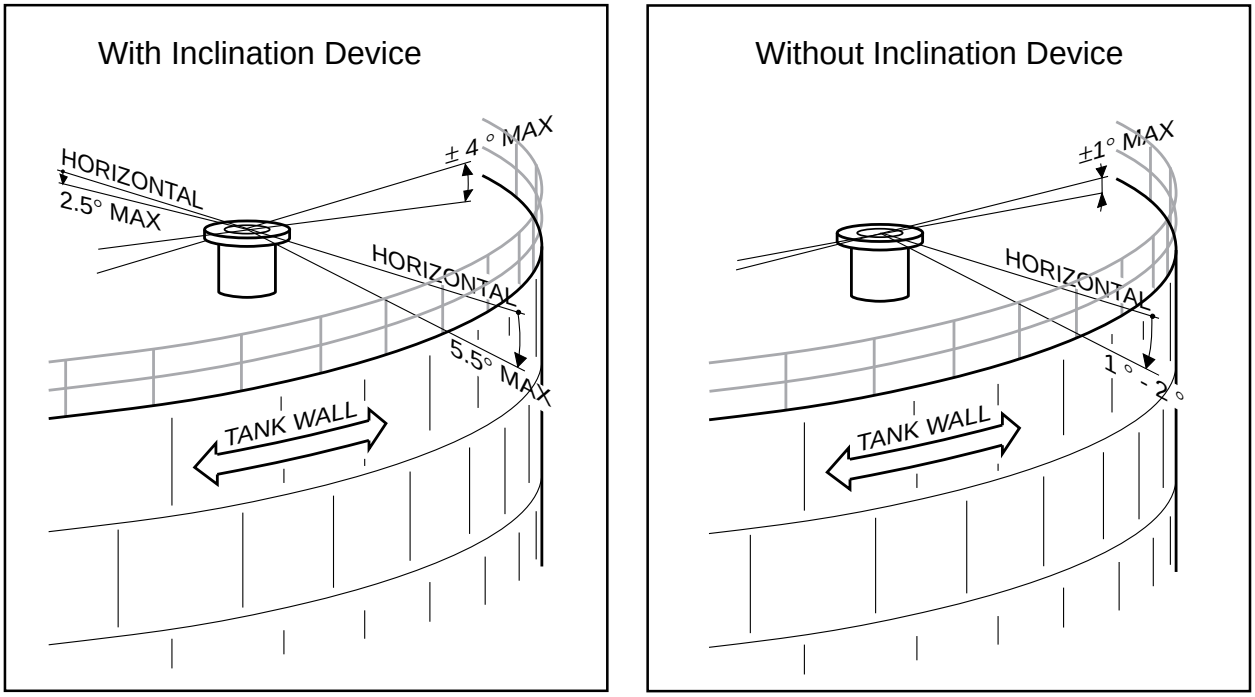

Figure 10.3 shows the requirements on the flange for RTG 2930 with and without the Inclination Device.

10.2.2 Free Space Requirement

The radar beam of the Parabolic Antenna Gauge is 10° wide. Obstacles (construction bars, pipes larger than Ø 2", etc.) within the radar beam are generally not accepted, as these can give a disturbing echo, see figure 10.11. However, in most cases, a smooth tank wall or heating coils can be accepted in the radar beam, since the interference from these can be regarded as small. For evaluation contact Saab Tank Control.

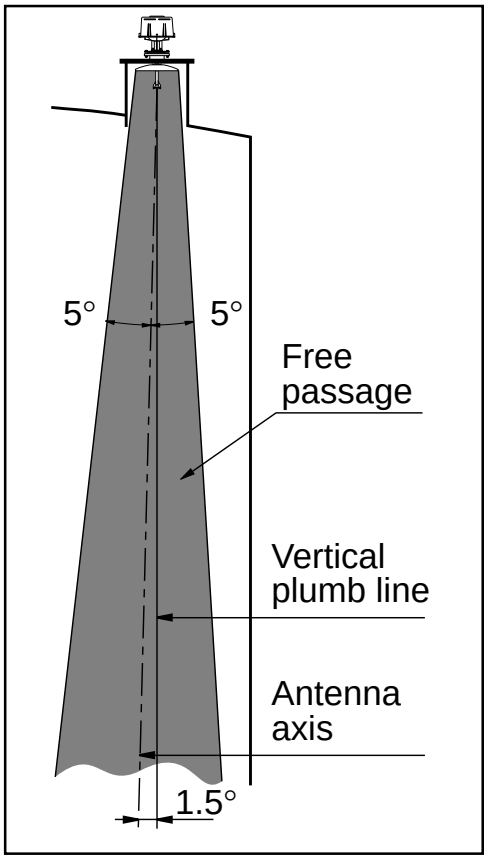

Figure 10.2 shows the free space requirements for RTG 2930.

10.2.3 Flange Requirements

The Parabolic Antenna Gauge can mounted on a welding neck flange that is welded to the cover or fixed to the cover with eight M16-stud screws welded onto the cover.

The dimensions of the welding neck flange are stated on the installation drawing for RTG 2930, see list of drawings in chapter 13. See figure 10.5.

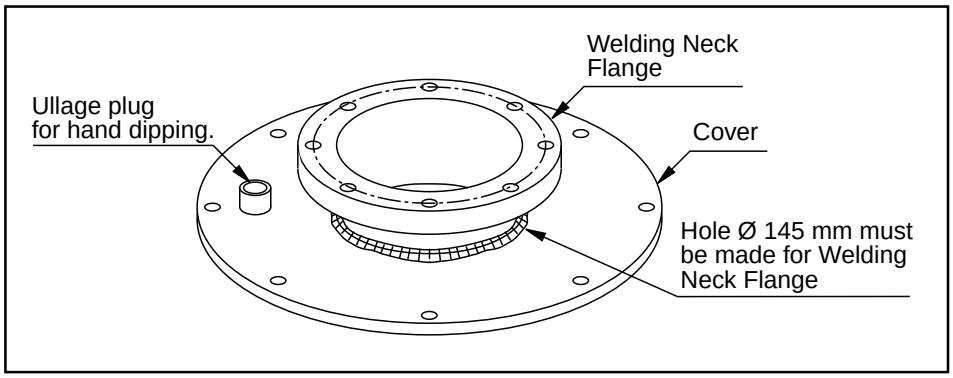

Figure 10.5 shows a welding neck flange for RTG 2930.

If the Parabolic Antenna Gauge is mounted with stud screws directly onto the cover then the surface for the gasket must be smooth in order to provide a good sealing. See figure 10.6. The top of the cover must have a 145 mm diameter hole through which the antenna is mounted. It must be possible to remove the cover when installing the antenna. Refer to installation drawing for manufacturing of cover, see list of drawings in chapter 13.

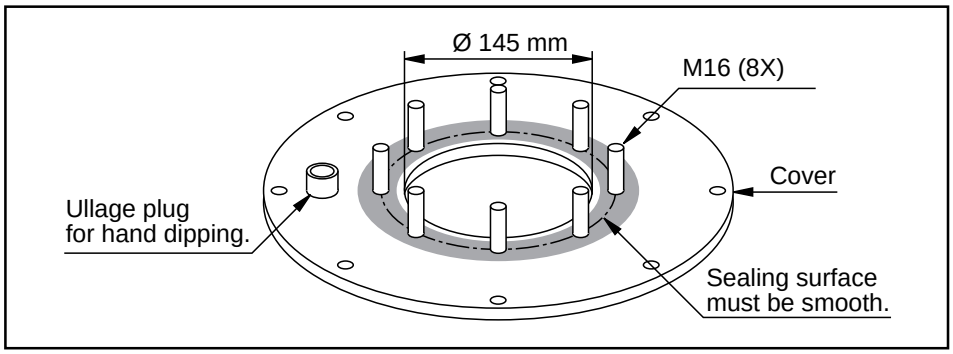

Figure 10.6. The gauge can be mounted on a manhole cover.

10.2.4 New Tanks

At new installations the distances from the tank wall to the antenna axis should be 0.8 m or larger.

10.2.5 Socket Requirements

When using a Ø 20" socket the height of the socket must not exceed 0.6 m.

If a socket with a larger diameter is used then the height can also be larger. In this case there must be a free passage for the radar beam within a 5° angle from the edge of the Parabolic Reflector to the bottom end of the socket. See figure 10.7.

Note: *The distance from the top of the customer's flange to the maximum product surface should not be less than 1.0 m. The highest accuracy cannot be maintained at distances less than 1.0 m.*

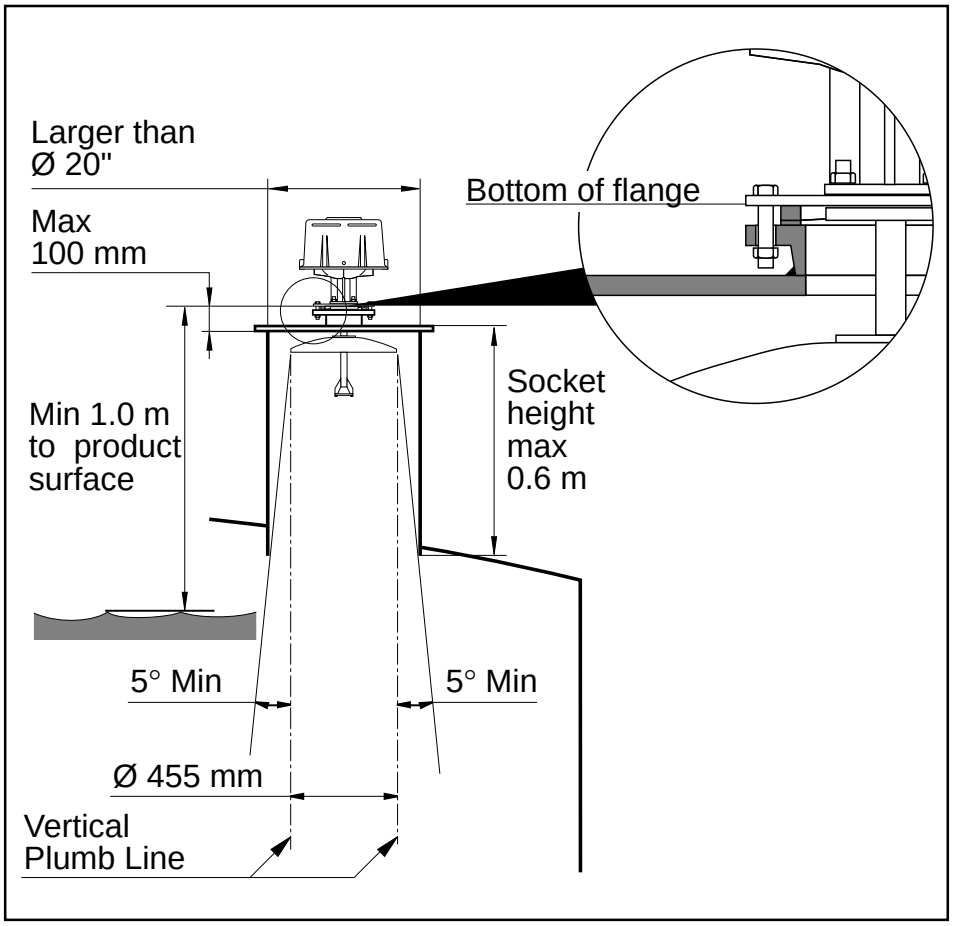

Figure 10.7 shows the requirements on the socket to RTG 2930.

10.3 Requirements for the Still Pipe Gauge, RTG 2940

Please refer also to the mechanical installation drawing for more information on the installation requirements.

10.3.1 Still Pipe Requirements

The Still Pipe Gauge fits 6", 8", 10" and 12" flanges and pipes. This adaption is accomplished by selecting a suitable Transition Cone. The gauge has a meeting flange for sealing of the tank.

Note: *The gap between the Transition Cone and the still pipe must not be larger than 4 mm anywhere along the lower end of the Transition Cone.*

Table 10.1 shows the wide range of schedules and pipe inner diameters that the Transition Cones can be mounted in.

The still pipe must be vertical within 0.3° (0.1 m over 20 m).

Main Pipe Diameter	Pipe Schedule		Pipe Inner Diameter	
	From	To	From (mm)	To (mm)
6"	SCH 20 S	SCH 40 S	Ø 156.3	Ø 154.1
8"	SCH 20 S	SCH 80 S	Ø 206.3	Ø 193,7
10"	SCH 20 S	SCH 40 S	Ø 260.3	Ø 254.5
12"	SCH 20 S	SCH 40 S	Ø 311.1	Ø 304.9

Tables 10.1 shows the pipe schedules and the maximum area of the holes.

Note: *If the Still Pipe Gauge has to be mounted on a pipe with a schedule or an inner diameter that is not included in the table above, then please contact Saab Tank Control or the Saab Tank Control representative.*

10.3.2 Flange Requirements

The Still Pipe Gauge fits flanges of sizes 6", 8", 10" and 12". The gauge has a meeting flange for sealing of the tank. The flange must be horizontal within ±2°.

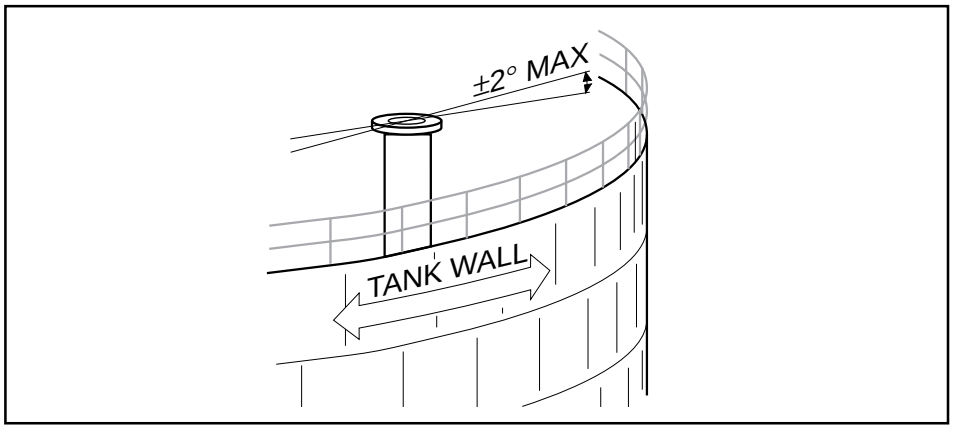

Figure 10.8. The flange must be horizontal within ±2°.

10.3.3 New Tanks

When constructing new tanks, an 8" still pipe or larger is recommended. This is especially relevant in tanks with sticky, viscous products. Before manufacturing a new still pipe, we recommend that you contact the Project Department at Saab Tank Control for advice. See also drawing with recommendations for still pipe dimensions, see list of drawings in chapter 13.

For highest performance, the total area of the slots or holes in the still pipe must not exceed the values shown in table 10.2 below. The area in the table is the total area of the holes over the entire length of the pipe, regardless of its length. In some cases it is possible to allow a larger area of the holes in the still pipe, than the area stated in table 10.2. When the limits are exceeded, please contact Saab Tank Control for advice.

Pipe Dimension	6"	8"	10"	12"
Max Area of Slots or Holes	0.03 m^2	0.12 m^2	0.40 m^2	1.00 m^2

Tables 10.2 shows the maximum area of the slots or holes.

10.3.3 Service Space

See installation drawing for requirements on the service space. It is necessary to have this free space when installing the gauge, when doing service on it and when hand dipping or taking samples. The height of the free space requirement depends on which Transition Cone that is used. The larger Transition Cones require higher free space.

10.4 Requirements for the LPG/LNG Gauge, RTG 2960

The LPG/LNG Gauge fits to a 6" flange and requires a still pipe for measurement.

Please refer to the mechanical installation drawing for more detailed information of the requirements on the installation of the LPG/LNG Gauge.

10.4.1 Temperature and Pressure Measurement

A prerequisite for high accuracy level-measurement is that temperature and pressure measurements are made. This can be accomplished in some different ways.

- An Independent DAU can interface both pressure sensors and temperature sensors.
- A Current Loop Card in the Transmitter Head to connect the pressure sensor and a Slave Data Acquisition Unit for the temperature measurement.

10.4.2 Still Pipe

A still pipe must be installed before the gauge is installed. The still pipe is customer supplied and should be manufactured according to the drawings specified in chapter 13.

Either a steel pipe with an inner diameter of 100 mm and 2-3 mm wall thickness or a 4" SCH 10 stainless steel pipe can be used. Specify the type of pipe in the Required System Information Form.

The still pipe must be vertical to within ±0.5°. The customer flange must be horizontal within ±1°.

10.4.3 References in Still Pipe

The still pipe is made with a number of holes along the length of it. Some of these holes are used to mount the Reference Pins and the Reflector Plug (if included).

The Reflector Plug is used for calibration of the gauge. The Reference Pins provide verification of the measurement when the tank is pressurized. The other holes provide pressure equalization so that the level is the same on the inside as on the outside of the pipe. These holes can be chosen to 20 mm or 3/4". All holes must be placed along a line on one side of the pipe. The direction of the line, along which the lines are located, must be marked clearly on the tank flange and customer flange.

There are two systems for references in the still pipe:

- One Reference Pin at the top of the still pipe and a Reflector Plug at the bottom of the pipe.
- Two or three reference pins installed at the top, the bottom and the middle of the pipe. This system is used when it is not possible to have an epoxy Reflector Plug in the tank.

10.4.4 System with Reference Pin and Reflector Plug

At the top of the pipe there is a reference pin and at the bottom there is a reference plug made from epoxy resin.

Note: *If the products that will be stored in the tank are not compatible with epoxy resin, the system with two or three Reference Pins should be used instead, see chapter 10.4.5.*

See installation drawings for information on where to place the references in the still pipe. Enclosed with reference pin and bottom plug are instructions on how to install these.

10.4.5 System with Reference Pins Only

Saab Tank Control delivers three Reference Pins to each Radar Tank Gauge and they have to be mounted in the still pipe before it is lowered into the tank. For more information please refer to the installation drawings, see List of Drawings in chapter 8.

Position the holes for the Reference Pins so that the top pin is located at approximately 95% of the total tank height but at least 0.8 m below the flange of the still pipe. Place the second pin at approximately 50% level.

Place the lowest pin at approximately 20 % of the tank height but at least 0.8 m above the lower end of the pipe.

On tanks with tank heights of less than 7 m, only the top and bottom reference pins are used.

10.4.6 Extension Pipe for Minimum Distance

The Radar Tank Gauge should be placed so that there is always 800 mm or more between the Closing and the maximum product level. If the tank is filled completely, an extension pipe can be mounted to raise the Radar Tank Gauge so that it measures correctly all the way up to the maximum level. See figure 10.9.

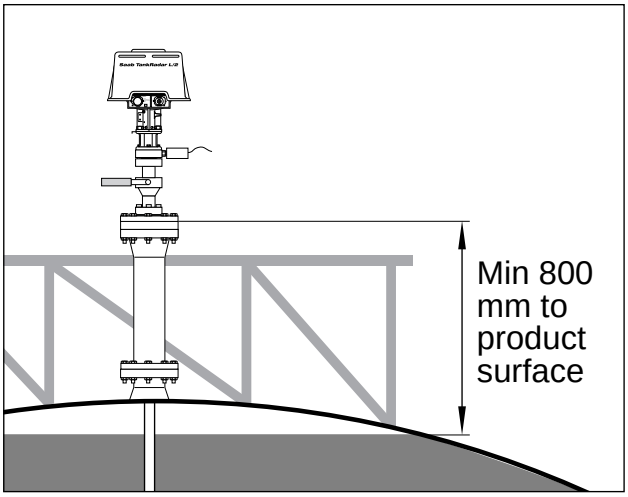

Figure 10.9 shows an extension pipe.

11 Mechanical Installation of the Radar Tank Gauges

Please refer also to the mechanical installation drawings for more information. A list of the drawings is presented in chapter 13.

11.1 Installation of Horn Antenna Gauge, RTG 2920

Note: *When determining the dimensions for conduits (if used), make note that the Horn Antenna Gauge may be inclined 4° towards the center of the tank. See figure 11.7. Use flexible conduits close to the Radar Tank Gauge.*

Follow this step by step instruction when installing the Cone Antenna Gauge, RTG 2920

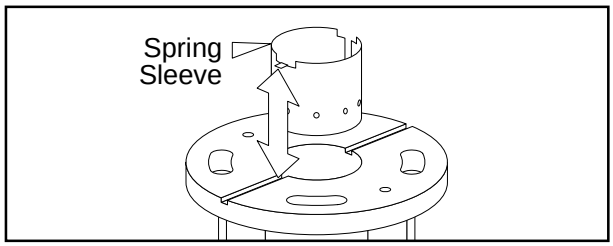

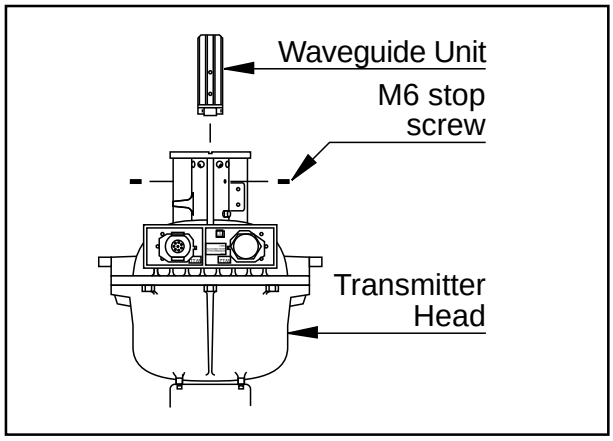

1. Check that all parts and tools are available before carrying them up to the tank top.
2. Mount the Spring Sleeve into the baser of the Transmitter Head. Turn the Spring Sleeve so that it fits into one of the notches.
3. Mount the Waveguide Unit into the base of the Transmitter Head. On one end of the Waveguide Unit there are two screws with washers fitted. Mount the Waveguide Unit with this end first into the base of the Transmitter Head. Enter the stop screws and tighten them.

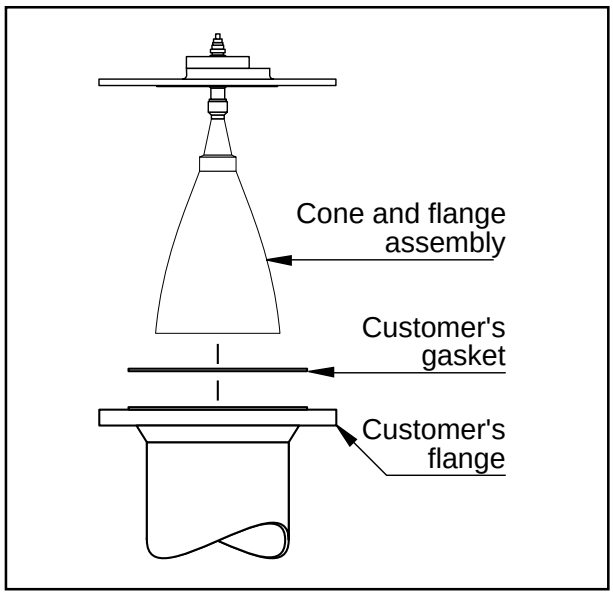

4. Carefully enter the Horn and Flange Assembly into the nozzle. Tighten the flange onto the customer's flange using customer supplied screws and nuts.
   Check that the socket height is less than 330 mm.

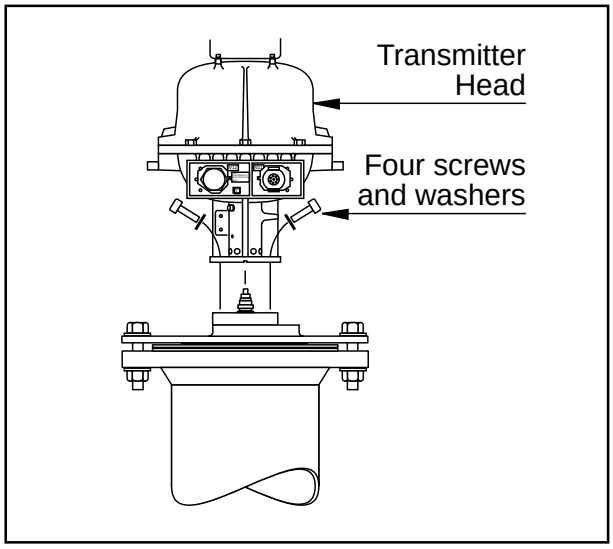

5. Mount the Transmitter Head onto the flange. Fit and tighten the four M10 screws with washers.

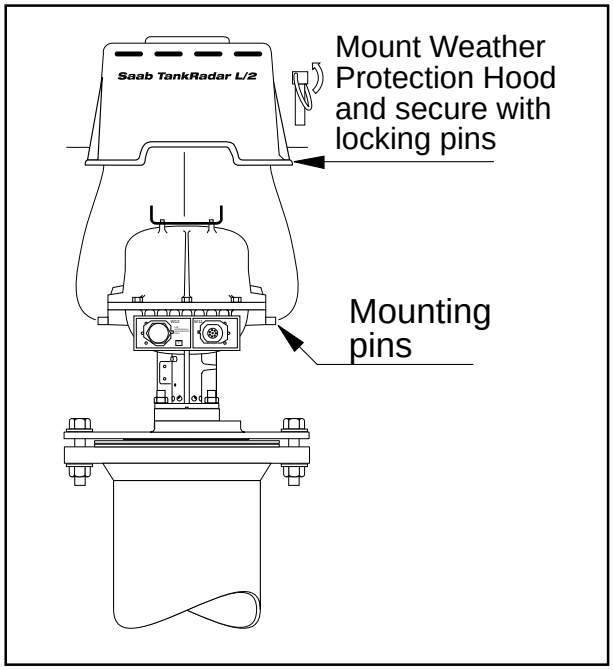

6. Mount the Weather Protection Hood and secure with locking pins.

11.2 Installation of the Parabolic Antenna Gauge, RTG 2930

Follow this step by step instruction when installing the Parabolic Antenna Gauge.

1. Check that all parts and tools are available before carrying them up to the tank top.

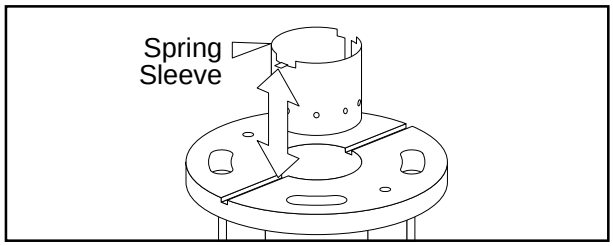

2. Mount the Spring Sleeve into the baser of the Transmitter Head. Turn the Spring Sleeve so that it fits into one of the notches.

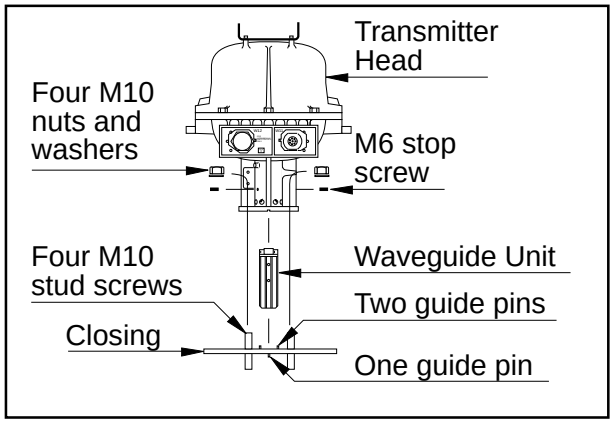

3. Mount the Waveguide Unit into the base of the Transmitter Head. On one end of the Waveguide Unit there are two screws with washers fitted. Mount the Waveguide Unit with this end first into the base of the Transmitter Head. Enter the stop screws and tighten them.
On the Closing there are two guide pins on one sided and only one on the other. Fit the Transmitter Head to the side of the Closing that has two guide pins with four M10 nuts and washers. These parts can be preassembled at a more convenient location than the tank top.

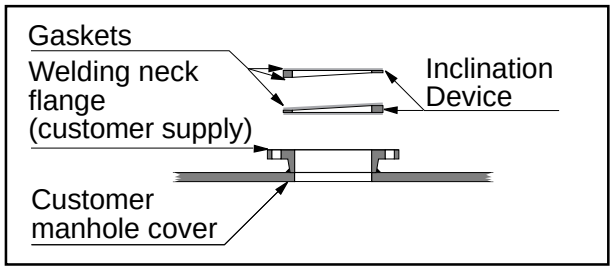

4. If the Inclination Device is used then check that the gaskets are correctly applied on the Angular Rings. Mount the Angular Rings onto the flange or manhole cover.

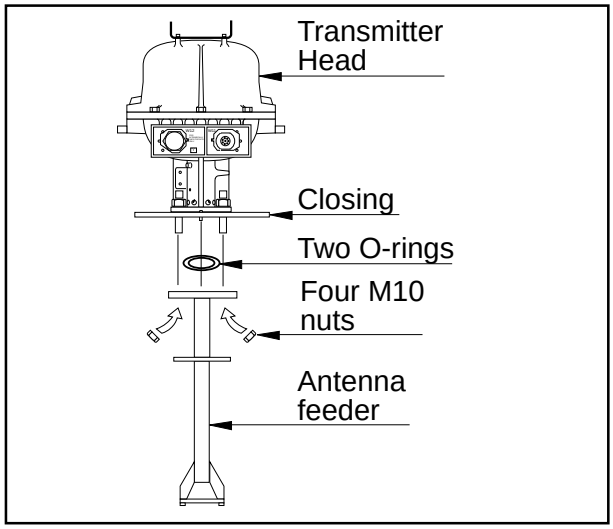

5. Check that the two O-rings are placed in their separate grooves on the top surface of the Antenna Feeder. Mount the Antenna Feeder to the Closing, entering the guide pin into its corresponding hole. Fit the four nuts and tighten.

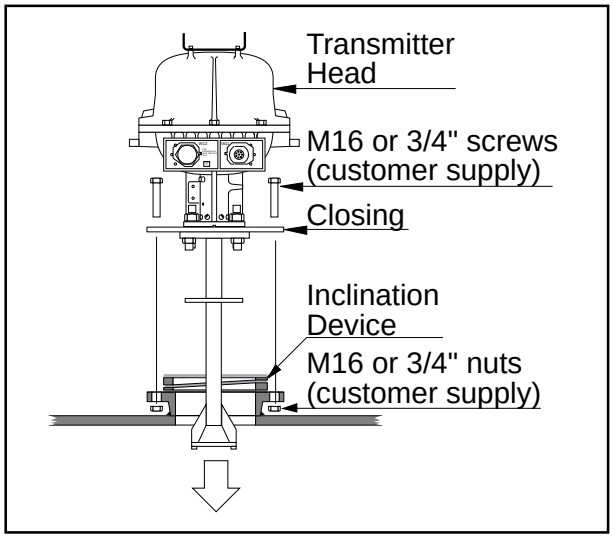

6. Carefully mount the Transmitter Head with the Closing and Antenna Feeder onto the flange and direct the Transmitter Head so that one of the ridges which are cast into the Safety Enclosure is pointed to the tank center.
Fit eight M16 or 3/4" screws and tighten them by hand. These screws are customer supplied.

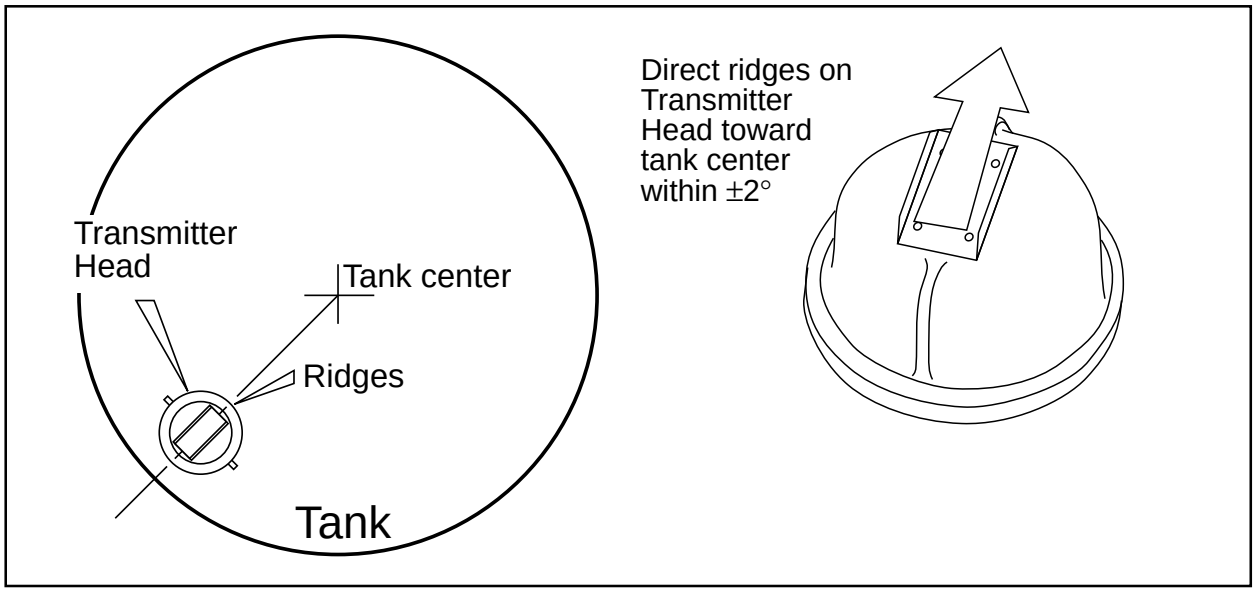

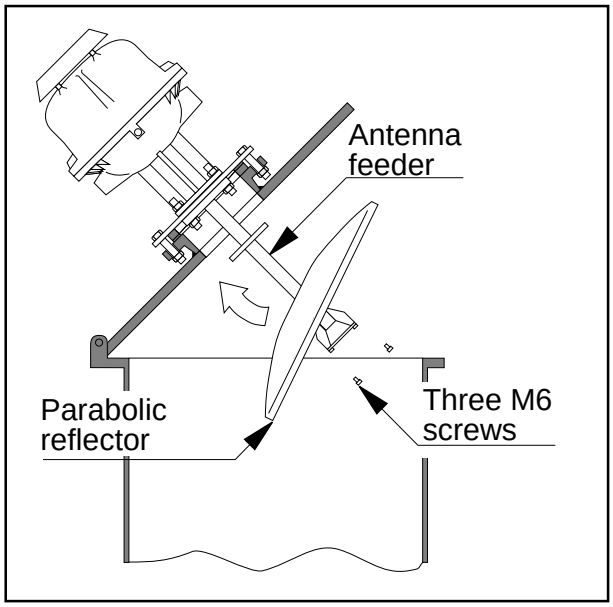

7. Open the manhole cover. Fit the Parabolic Reflector onto the Antenna Feeder. Fit and tighten the three screws.

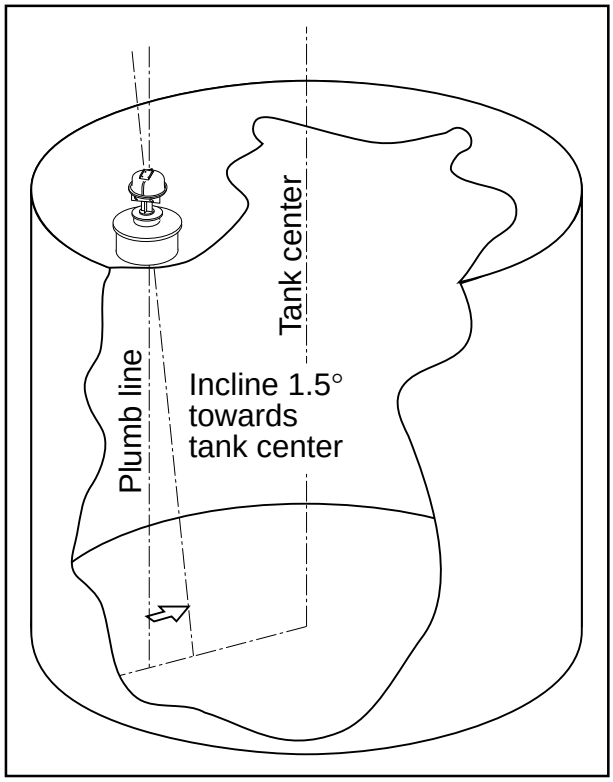

8. Replace the manhole cover. Adjust the inclination of the Gauge, so that the antenna axis points 1.5° to the tank center, using the Inclination Device. Tighten the eight screws for the Closing.
Note: *For bitumen tanks, the gauge should be mounted with 0° inclination.*

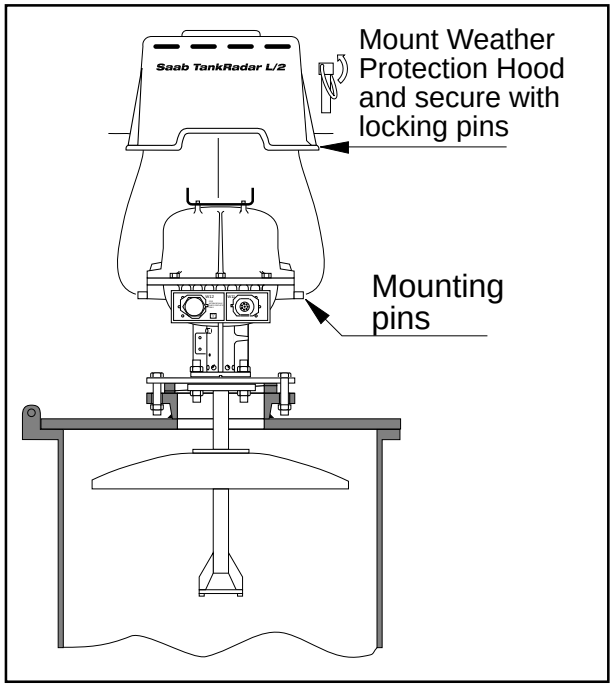

9. Fit the Weather Protection Hood onto the two pins of the Transmitter Head.

11.3 Installation of the Still Pipe Gauge, RTG 2940

Note: *If there is no flange on the still pipe a clamp flange must be mounted.*

Follow this step by step instruction when installing the Still Pipe Gauge.

1. Check that all parts and tools are available before carrying them up to the tank top.
2. Enter the Cone into the still pipe to make sure it fits. Maximum gap between the Cone and the pipe is 4 mm.

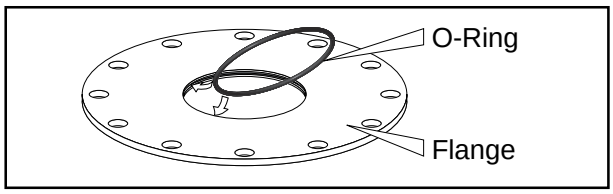

3. Mount the O-ring into the flange.

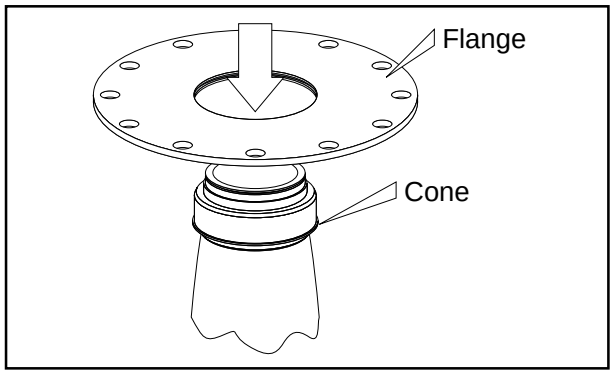

4. Press the Flange onto the Cone. Use manual force only. If there is much resistance, try putting some grease on the O-ring.

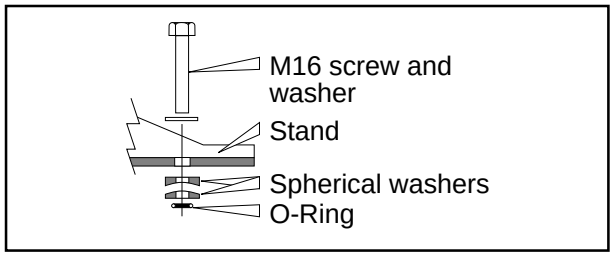

5. Place the M16 screw with a washer in the Stand. Fit the spherical washers onto the screw and secure these washers by mounting the small O-ring under the washers. This O-ring can be left on when the Stand is mounted onto the flange.
6. Mount the Stand onto the Cone and tighten the four screws.

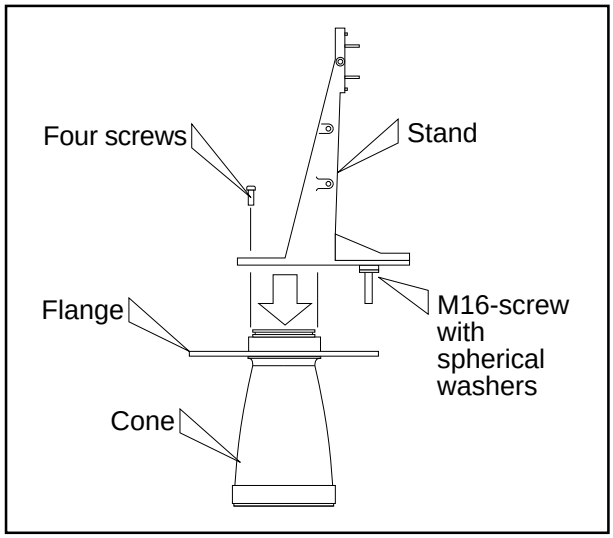

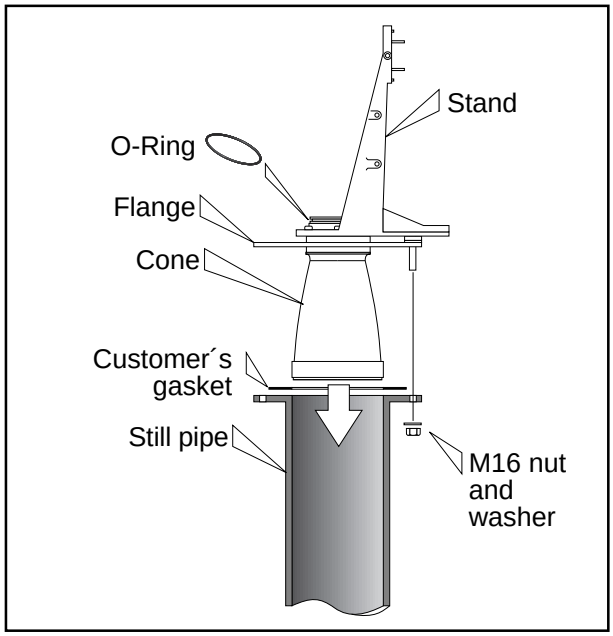

7. Place a customer supplied gasket on the flange of the still pipe.
8. Mount the assembly into the still pipe. Use only manual force. Too much force can damage the Cone. Mount customer supplied screws and nuts and tighten. Make sure the Cone is centered in the still pipe. Fit the M16-nut and tighten.

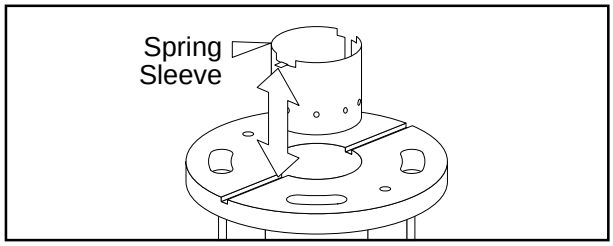

9. Mount the Spring Sleeve into the baser of the Transmitter Head. Turn the Spring Sleeve so that it fits into one of the notches.

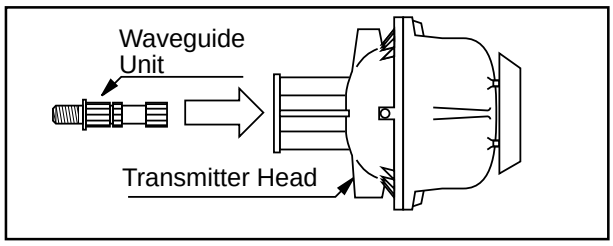

10. Slide the Waveguide Unit into the Transmitter Head. It can only be entered in one way.

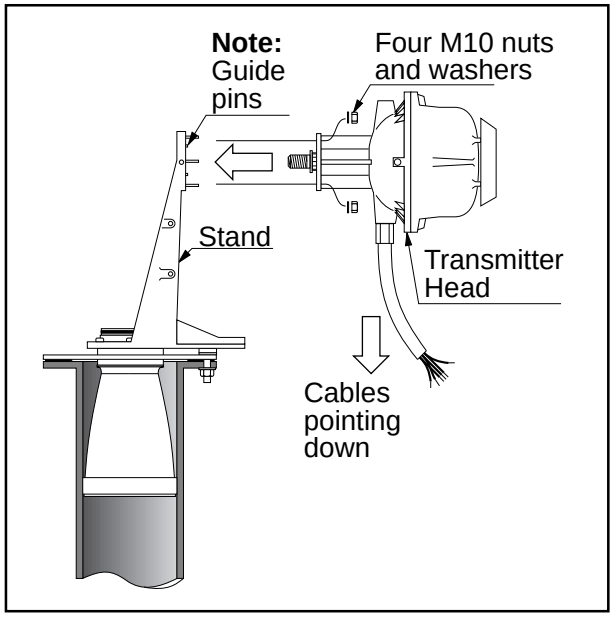

11. Mount the Transmitter Head onto the Stand with its cable connections pointing down. Be careful not to drop the Waveguide Unit as it is not in i fixed position. Check that the guide pins on the Stand enter the holes on the base of the Transmitter Head properly. Fit and tighten the M10 nuts.
12. The Waveguide Unit will not be in a fixed position until the Transmitter Head has been tightened to the Stand.

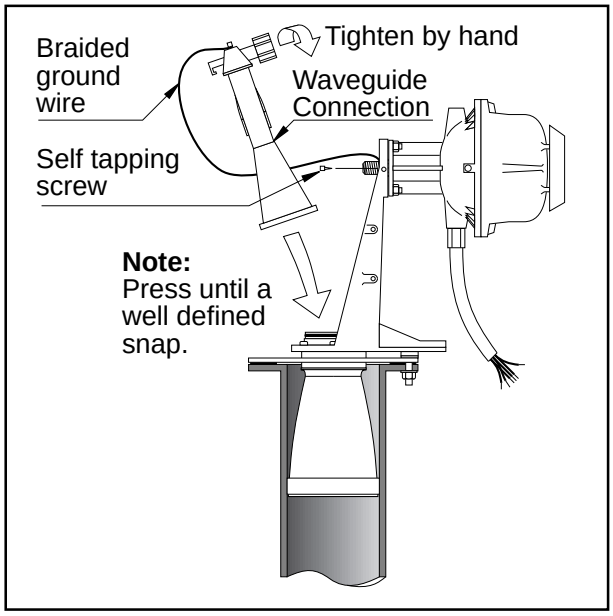

13. Fit the Waveguide Connection into the Cone. **It must be firmly pressed down so that there is a well defined snap as the lower end fits onto the O-ring of the Cone**. Tighten the nut onto the thread of the Waveguide Unit by hand.
Mount the ground wire onto the Stand.

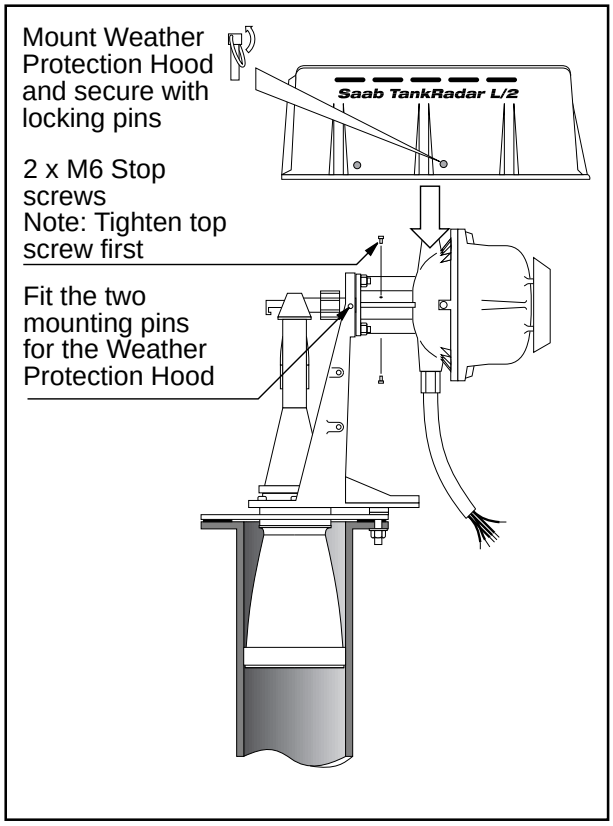

14. Secure the Waveguide Unit by tightening two stop screws into the base of the Transmitter Head. Tighten the top screw first. Fit the two mounting pins onto the Stand and mount the Weather Protection Hood onto the four pins.

11.4 Installation of the LPG/LNG Gauge, RTG 2960

Follow this step by step instruction when installing the LPG/LNG Gauge.

Note: *There must be a clear mark on the customer flange to show the direction of the reference pins in the still pipe. Carefully check that the Closing is mounted in the appropriate angle relative to that mark.*

See also the installation drawings. See chapter 13 for list of drawings.

The Lower Flange, the ball valve and the Closing are preassembled and delivered as one unit.

1. Check that all parts and tools are available before carrying them to the tank top.
2. Install the still pipe according to mechanical installation drawing 9150057-986 or 9150057-987.
3. Enter the Cone into the still pipe to make sure it fits. Maximum gap between the Cone and the pipe is 2 mm.

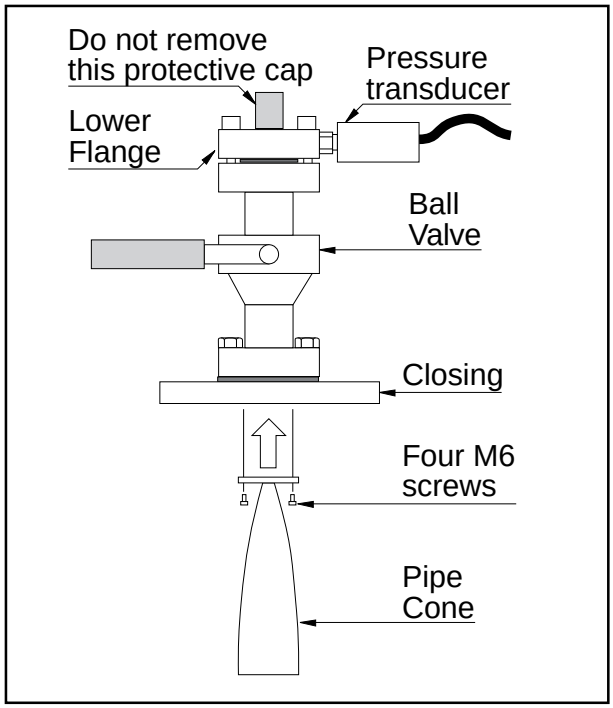

4. Mount the Pipe Cone onto the Closing using four M6 Allen head screws. Be careful when handling the Closing with the Pipe Cone mounted onto it as it is very important that the Pipe Cone is not deformed.
   Do not remove the yellow protective cap.

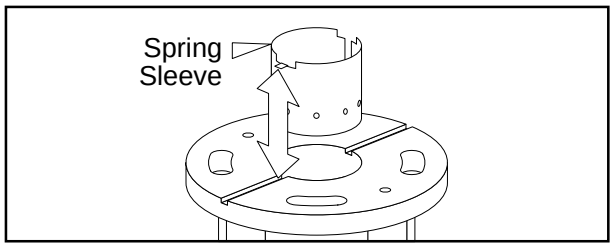

5. Mount the Spring Sleeve into the baser of the Transmitter Head. Turn the Spring Sleeve so that it fits into one of the notches.

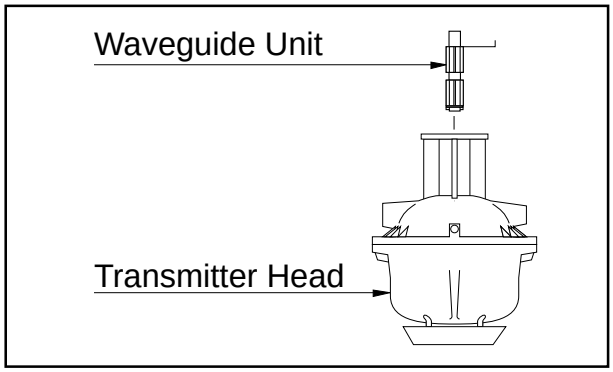

6. Put the Transmitter Head upside down on a flat surface and fit the Waveguide Unit into the base.

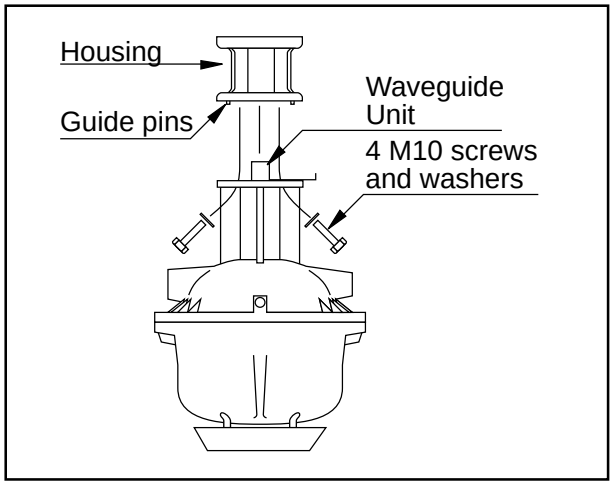

7. Fit the Housing to the Transmitter Head. Carefully check that the Guide Pins enter their respective holes and turn the lever of the Waveguide Unit so that it fits into the corresponding recess in the Housing. Tighten the Housing to the base of the Transmitter Head using four M10 screws and washers.

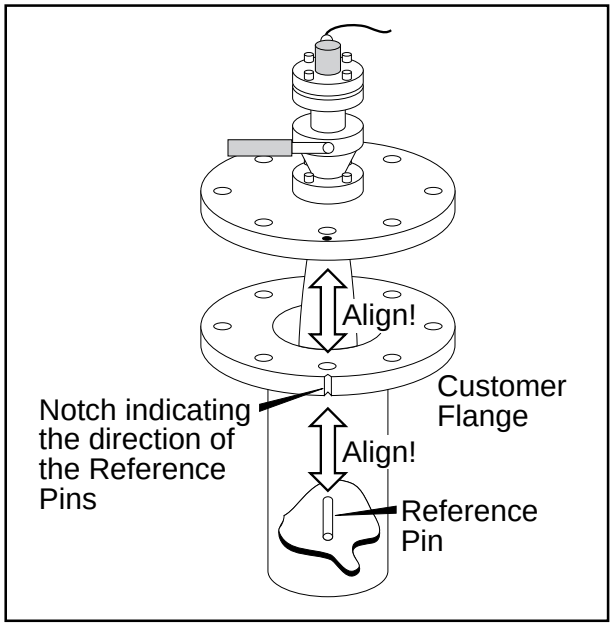

8. Place customer supplied gasket on customer's flange. Carefully fit the Pipe Cone into the still pipe and tighten the Closing onto the 6" flange using customer supplied screws and nuts. Direct the Closing so that the marking hole aligns with the notch or mark on the customer flange.
9. The tank is now sealed and can, as far as Saab Tank Control equipment is concerned, be pressurized.

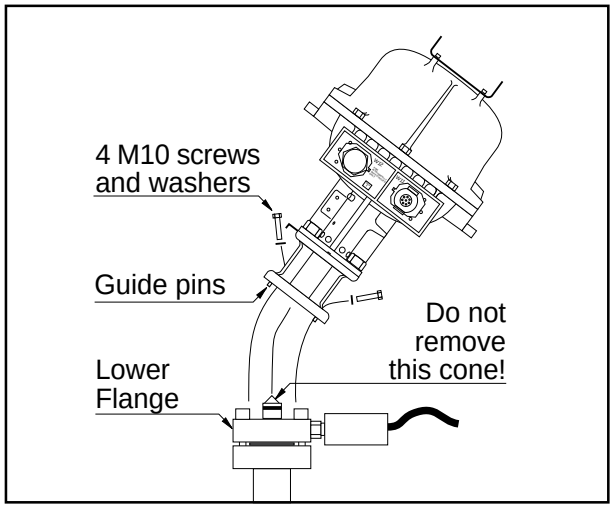

10. Remove the yellow protection cap, but do not remove the rubber cone. Fit the Transmitter Head and the Housing onto the Lower Flange. Carefully check that the Guide Pins enter their respective holes. Tighten using four M10 screws and washers.

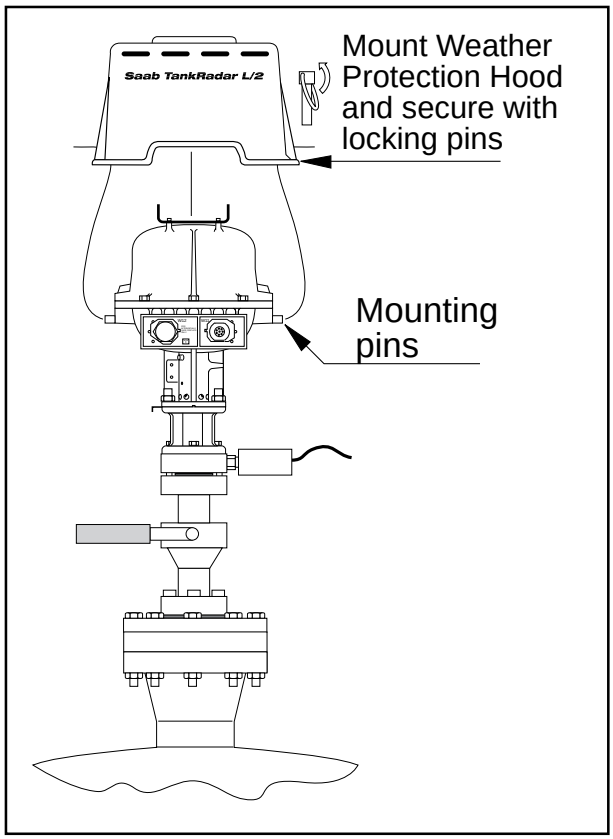

11. Fit the Weather Protection Hood onto the mounting pins of the Transmitter Head.

12 Electrical Installation

Warning! *Isolate and terminate ends of unused wires. The intrinsic safety may be jeopardized if any cable ends are hanging loose. Use certified battery operated instruments only. Use Saab Tank Control original spare parts only.*

Note: *For all electrical installation, please see the instructions in the electrical installation drawings. See list of drawings in chapter 13.*

12.1 Cabling for Power Supply

The cables used for the power supply connection must be suitable for the supply voltage in question and also approved for use in hazardous area where it is applicable. In the USA, for example, explosion proof conduits must be used in the vicinity of the tank. The wire areas must be selected not to cause too much voltage drop on the way to the RTGs, the DAUs, the FCUs, etc.

Each Radar Tank Gauge and Field Communication Unit have a switch for voltage selection that can be set to either 115 VAC or 230 VAC. Check that the switch is set in the right position before power is connected. See chapter 3.1.3 and 6.3.

The selection of 115 or 230 VAC power supply for the Independent Data Acquisition Unit is made by connecting a strap on one of the printed circuit boards in the flameproof enclosure. See chapter 4.7.1. Maximum power consumption is 10 W.

The Slave Data Acquisition Unit receives its power via the local line from the associated Radar Tank Gauge.

The power supply connection to the Radar Tank Gauge should be made with wires according to table 12.1 below. The table shows the voltage drop at various cable lengths and wire areas at the maximum power consumption of 80 W. The figures shaded in grey indicate combinations of lengths and areas that might result in too high voltage drops.

		115 V		230 V	
Cable Length		0.75 mm^2 (AWG 18 or similar)	1.5 mm^2 (AWG 16 or similar)	0.75 mm^2 (AWG 18 or similar)	1.5 mm^2 (AWG 16 or similar)
100 m	330 ft.	3.1 V	1.6 V	1.6 V	0.8 V
200 m	660 ft.	**6.3 V**	3.2 V	3.2 V	1.6 V
500 m	1640 ft.	**16 V**	**8 V**	**8 V**	4 V

Table 12.1. Grey areas show too high voltage drop.

12.2 Cabling for TRL/2 Bus

The TRL/2 bus requires a twisted and shielded pair with an area of min 0.50 mm^2 (AWG 20 or similar). The maximum length of the TRL/2 bus is 4 km. The TRL/2 Field Bus can normally use existing cables in the tank area.

Note: *Wherever two TRL/2 Buses run alongside each other, sharing the same cable or conduit tube, individual shielding is mandatory in order to avoid crosstalk.*

12.3 Grounding

According to national code of practice the Transmitter Head or Data Acquisition Unit can be grounded by connecting an exterior 4 mm^2 wire to a potential equalization network, or, if no such exists, to the tank structure. A grounding lug is available on the enclosure for this purpose.

Note: *When the enclosure is connected to a potential equalizing network or to the tank structure, the protective ground with the power supply must* ***not*** *be connected.*

If the enclosure is not externally grounded, the protective ground with the power supply should be connected.

12.4 Electrical Installation of the Radar Tank Gauge, RTG

12.4.1 The Non-Intrinsically Safe Connection (W11)

The power connection is made with two wires. The TRL/2 Field Bus connection is made with a single pair of shielded twisted wires.

A Junction Box is required for the non-intrinsically safe connection of the power supply and the TRL/2 Field Bus. The junction box can either be customer supplied or supplied by Saab Tank Control as an option, see chapter 7. The three wires in the cable output that are not used must be properly insulated and terminated in the junction box.

12.4.2 The Intrinsically Safe Connection (W12)

See chapter 3.1.2 for information on number of cables in lead seal.

If the distance between the Transmitter Head and the Slave Data Acquisition Unit is longer than 2.0 m, a junction box must be used to connect an extension cable. This extension cable must not be longer than 50 m. For safety reasons the ends of the unused wires must be properly insulated and terminated. The junction box can either be customer supplied or supplied by Saab Tank Control as an option, see chapter 7.

A flexible protective hose for the wires is delivered with the Barrier Unit or the Current Loop Card, or with the Transmitter Head if the units have been factory installed. For reasons of electromag-

netic interference and compatibility it is very important that a continuous metal shield is covering the wires between the Transmitter Head and the Slave Data Acquisition Unit. If an extension cable is used, both the cable and the junction box must provide good shielding.

12.5 Electrical Installation of the Data Acquisition Unit, DAU

Instructions for the connection of the Data Acquisition Unit is given on the inside of its cover.

12.5.1 Electrical Installation of the Slave DAU, DAU 2100

The connection to the Radar Tank Gauge is done according to the instructions in chapter 12.4.2 above.

Either Pt 100 (spot element) or Cu 100 (averaging sensor) temperature sensors can be used. If the sensors are connected with common return wires then jumpers must be connected in the Data Acquisition Unit terminals.

Intrinsically safe connection of the temperature sensors, the RTDs, is made with n + 2 wires for an n-element spot or averaging sensor. There are spot elements with three wires for each element.

12.5.2 Electrical Installation of the Independent DAU, 2130

The connection of the power supply and the TRL/2 Field Bus is made through the lead seal W21.

A Junction Box is required for the non-intrinsically safe connection of the power supply, the TRL/2 Field Bus and the relay outputs. The junction box can either be customer supplied or supplied by Saab Tank Control as an option, see chapter 7.

Temperature sensors are connected in the same way as for the Slave Data Acquisition Unit which is described above in chapter 12.5.1.

Intrinsically safe 4-20 mA transducers can be connected to the current inputs with two wires for each sensor. Up to four transducers can be connected to each Data Acquisition Unit but the input multiplexer can only bias one at a time. These connections are normally used for pressure sensors or interface probes.

Eight intrinsically safe digital or frequency inputs are provided. Each input requires two wires.

Four non-intrinsically safe relay outputs are available with two wires per relay. This option has to be specified in the Required System Information Form. The relays are connected through the lead seal W22.

12.6 Electrical Installation of the Field Bus Modem, FBM 2170

The Field Bus Modem is delivered, as standard, with a 3 m long cable for the RS-232C connection to the PC. The TRL/2 bus connection is made with a twisted pair of wires. The Field Bus Modem must not be used in a hazardous zone as it is not explosion protected. The Field Bus Modem is powered from an AC/DC converter (6-15 V, 10 mA) supplied by Saab Tank Control. In some rare cases the Field Bus Modem can be powered from the RS-232C port of the PC.

12.7 Electrical Installation of the Field Communication Unit, FCU 2160

The FCU can be connected to the PC either directly via RS-232C or via a TRL/2 Group Bus.

For the connection of the TRL/2 Bus, see chapter 12.2.

The RS-232C connection can be made with 3 wires from the PC to the Field Communication Unit. The area must be at least 0.25 mm^2 (AWG 24 or similar). The maximum length of the RS-232C connection is 30 m.

13 List of Drawings

13.1 Mechanical Installation

9150041-958 Reference Pin Installation, RTG 2960 LPG/LNG Gauge
9150057-951 Instruction Still Pipe Installation, RTG 2960 (LPG/LNG Gauge)
9150057-924 Mechanical Installation, RTG 2940 Still Pipe Gauge
9240003-987 Recommended still pipes for Saab TankRadar
9150057-982 Mechanical Installation, RTG 2930 Parabolic Antenna Gauge
9150066-961 Mechanical Installation, RTG 2920 Horn Antenna Gauge
9150057-957 Mechanical installation drawing, RTG 2960 (LPG/LNG Gauge)
9150057-958 Mechanical installation drawing, Still Pipe Alt. A, RTG 2960
9150057-959 Mechanical installation drawing, Still Pipe Alt. B, RTG 2960
9240002-912 Mechanical Installation Independent DAU, DAU 2130
9240002-913 Mechanical Installation Slave DAU, DAU 2100
9240002-914 Mechanical Installation FCU 2160
9240003-906 Mechanical Installation Temperature Bulb
9240003-489 Mechanical Installation Temperature Connection Box

13.2 Electrical Installation

9240002-902 Electrical Installation FBM - FCU
9240002-903 Electrical Installation FBM - Group Bus
9240002-904 Electrical Installation FCU - FBM
9240002-905 Electrical Installation FCU - RS-232
9240002-906 Electrical Installation FCU - Modem
9240002-907 Electrical Installation Independent DAU - Cu 100
9240002-908 Electrical Installation Independent DAU - Pt 100
9240002-909 Electrical Installation Slave DAU - Cu 100
9240002-910 Electrical Installation Slave DAU - Pt 100
9240002-911 Electrical Installation Radar Tank Gauge
9240002-923 Electrical Installation RTG + Current Loops + DAU
9240002-924 Electrical Installation RTG + Current Loops + DAU
9240002-925 Electrical Installation RTG + Current Loops + Display
9240002-930 Electrical Installation RTG + Current Loops + DAU
9240002-936 Electrical Installation FCU RS-485 - Host Computer

14 Description of the Required System Information

In order to be able to correctly configure and assemble the parts of the system the Required Information Form must be completed.

It is also necessary to provide drawings of the tank farm layout with proposed location of Radar Tank Gauges, Data Acquisition Units, Field Communication Units, Field Bus Modems, Operator's Interface etc.

The Required System Information Form and the drawings must be filled in and returned to Saab Tank Control or to Saab Tank Control Representative 1-3 months before delivery.

When the system is started up all the database constants have to be programmed into the system. For this purpose the Data Sheets in the Service Manual should be completed. The completed Data Sheets are a great aid when setting up the system using either the Operator's Interface (OPI) or the Configuration Software (COS).

14.1 System Configuration

Enter how many Field Communication Units, Radar Tank Gauges, Slave Data Acquisition Units and Independent Data Acquisition Units that will be connected to the system.

Enter power supply as either 115 V or 230 V.

14.2 System Master

The Operator's Interface software needs at least a 486/33 MHz computer. There is a minimum requirement of at least 8 MByte RAM memory for the OPI Software and 12 MByte RAM for the OPI/2 Software. The operating system must be OS/2 of version 1.2 Standard Version or higher. It is not a requirement, but it is very convenient to operate the program with a mouse or some other pointing device.

14.3 Plant Host Computer System (Plant DCS)

The type and make of the host computer must be entered in the table. The type of communication and the communication protocol must be specified. The host computer can be connected directly to the Field Communication Units or it can be connected to a PC with the Operator's Interface. See chapter 8.

14.1.3 Tank Data

The tank type, the tank content, its temperature range and its maximum pressure has to be filled in. The Tank Reference Height is the reference height from the Tank Reference Point down to the Datum Level or the tank bottom, whichever that is used as the zero level. The Tank Reference Point should be the ullage plug which will be used for hand dipping. The Tank Connection Type has to be specified as either Horn Antenna, Still Pipe, Parabola or

LPG/LNG. Enter if an Inclination Device will be used. If there is a still pipe then enter the inner diameter and the type of pipe that will be used.

Specify to which Field Communication Unit that each tank will be connected. If there will be a Data Acquisition Unit connected at the tank then specify if it will be a Slave or an Independent DAU and if it will be equipped with a Local Readout LCD Display.

The number of digital outputs have to specified and if they are to be normally ON or normally OFF.

The number of temperature sensors and their type (Cu 100 or Pt 100) has to be entered. Other inputs can be current inputs, frequency inputs or digital inputs. Specify what kind of signal that is read at the input. Please note the heights of the Resistance Temperature Detectors in the tables on pages 6-8 in the appendix. See also figure 14.1 below.

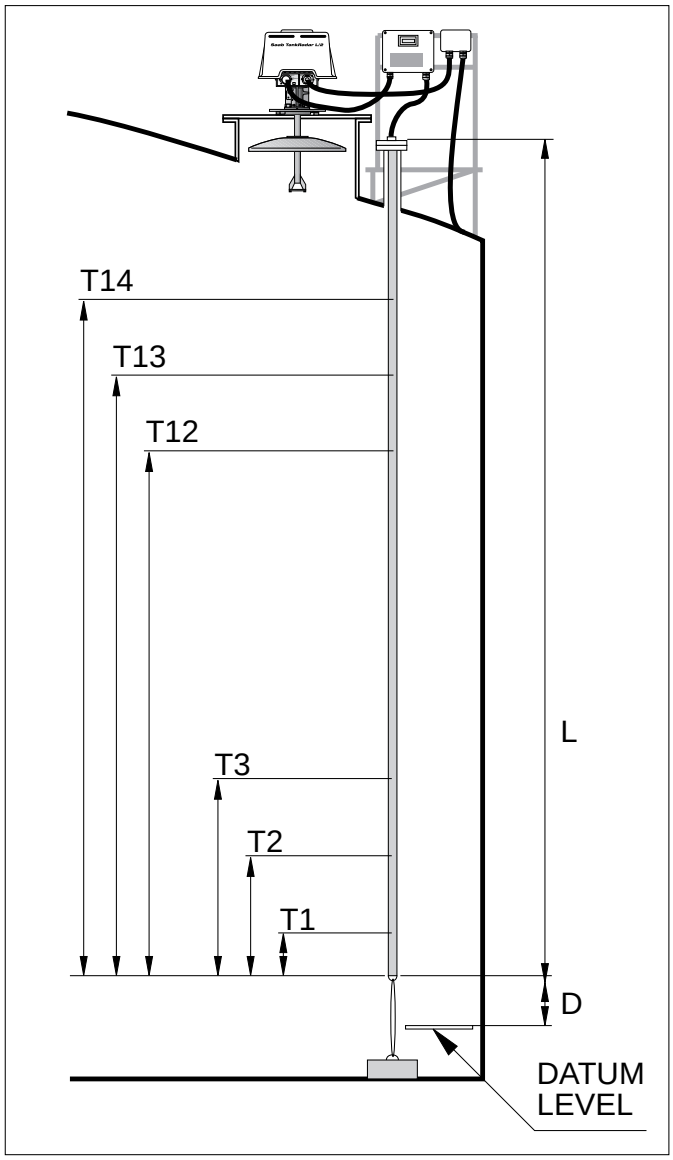

Figure 14.1. Installation of temperature sensors.

This page is intentionally left blank.

Required System Information Form

All constants are defined in the Installation Manual, Chapter 14.

Please state all distances in metric units.

Installation site: _____

Total number of tanks:_____

Name of person who
completed this form: _____

In order to be able to correctly configure and assemble the parts of the system the Required System Information Form must be filled in.

It is also necessary to provide drawings of the tank farm layout with proposed location of Radar Tank Gauges, Data Acquisition Units, Field Communication Units, Field Bus Modems, Operator's Interface etc.

Note: *See chapter 9 in the Installation Manual when completing the form.*

Copyright © June 1995.
Saab Marine Electronics AB

System Information:

		Power Supply	
		115 V	230 V
Number of FCU's:			
Number of RTG's:			
Number of Slave DAU's:			
Number of Independent DAU's:			

PC for OPI or OPI/2 Software:

Type and make (manufacturer) of PC:	
Size of RAM (OPI: Min 8 MByte, OPI/2: Min 12 MByte):	

OPI Network

Number of servers in network	
Number of clients in network	
If existing network: Type of network operating system	

Plant DCS (Plant Host Computer):

Type and make (manufacturer) of computer:	
Type of communication:	
Communication protocol:	
Connected to FCU's or to Operator's Interface:	

Connection to TRL-System:

Processor Unit Serial Number:	

Tank Data

Tank Name	Tank Product	Temp.		Max Over Pressure	Tank Height Approx.	RTG Type (2920, -30, -40 or -60)
		Min	Max			

Tank Data (Cont.)

Tank Name	If RTG 2920 or RTG 2930:		If RTG 2940:			If RTG 2960:		
	Dist. to Tank Wall (mm)	Socket Height (mm)	Pipe Inner Diam. (mm)	Size of Slots/ Holes (Ø or WxH in mm)	Number of Slots/ Holes per meter	Flange Pressure Rating	Pipe Inner Diameter (Mark with X)	
							DIN 100	4" SCH 10

Tank Data (Cont.)

Tank Name	Conn. to FCU name or number:	Data Acquisition Unit, DAU				Option	Option
		Inde-pendent or Slave DAU:	Number of Temp. Sensors:	Type of Temp. Sensors:	Other Inputs:	Digital Outputs Normally **ON** or **OFF**:	Local Readout Display (Yes/No)

Tank Data

Specific requirements to fulfill FCC rules (Only for US markets)

Tank Name	Metallic tank (Yes/No)	Any permanent openings (Yes/No)	Any occasional openings on tank (Yes/No)

Temperature Sensor Installation

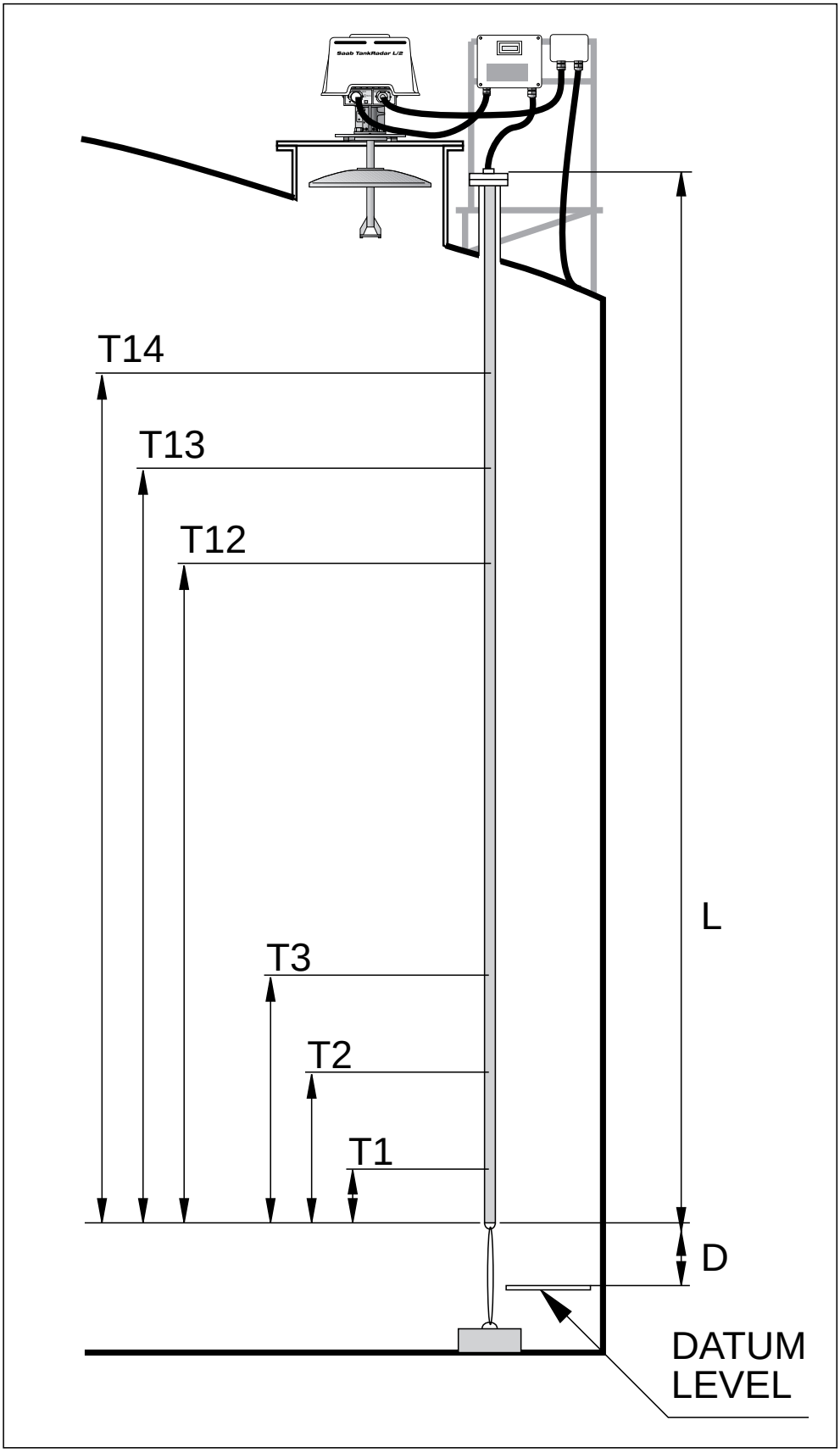

Installation of Temperature Sensors (Cont.)

Tank Name	L	D	Resistance Temperature Detectors						
			T1	T2	T3	T4	T5	T6	T7

Installation of Temperature Sensors (Cont.)

Tank Name	Resistance Temperature Detectors							
	T8	T9	T10	T11	T12	T13	T14	

Index

A

Analog inputs 55, 59
Angular Rings
    Parabolic Antenna Gauge 44
Asphalt 16, 17, 34

B

Barrier Unit 54
Barrier Unit Card 14
Barrier Unit Kit 14
Bitumen 16, 17, 34
BU 14

C

Cable length 54
Cable Outputs 13
Cable Requirements
    Power Supply 53
    TRL/2 Bus 54
CLC 15
Closing
    LPG/LNG Gauge 50
    Parabolic Antenna Gauge 44
Commissioning Check List 31
Communication 58
Communication Ports 25
Conduits 42
Configuration Software 9
COS 9
Cu100 59
Current Loop Card 15, 54

D

Data Acquisition Unit 9
    Description 20
Database 58
Datum Level 58
DAU 2100 ..... 22, 55
DAU 2130 24
DCS 29, 58
Digital inputs 59
Digital or frequency inputs 55
DPS board 23

E

Electrical Installation 53
    Data Acquisition Unit 55
    Field Bus Modem 56
    Field Communication Unit 56
    Independent DAU 55
    List of Drawings 57
    Radar Tank Gauge 54
    Slave DAU 55
Electronic Unit 13
Explosion proof 10, 11
Explosion protection 10
Extension Pipe
    LPG/LNG Gauge 41

F

FBM 2170 ..... 9, 24, 56
FCM interface boards 25
FCU 2160 ..... 9, 25, 27, 56
FCU Enclosure 26
Field Bus 25
Field Bus Modem 9, 24
    Description 24
Field Communication Unit 9, 25
    Description 25
Flame proof 10
Flange
    Parabolic Antenna Gauge 36
Flange Adapter 47
Flange Requirements 38
    Parabolic Antenna Gauge 36
Flexible conduits 42
Free Space Requirement
    Parabolic Antenna Gauge 32, 35
Frequency inputs 59

G

Ground 54
Grounding 54
Group Bus 25

H

Hazardous area 10
Horn Antenna Gauge
  Description 16
  Installation requirements 32
Host computer 30, 58
Housing 51

I

Inclination
  Parabolic Antenna Gauge 34, 46
Inclination Device 34
  Parabolic Antenna Gauge 34, 44
Independent DAU 9, 20
  Description 23
Inner diameters 38
Installation Data
  Both DAUs 22
  Field Bus Modem 24
  Field Communication Unit 27
  Horn Antenna Gauge 16
  Independent DAU 24
  LPG/LNG Gauge 19
  Parabolic Antenna Gauge 17
  Slave DAU 22
  Still Pipe Gauge 18
  Transmitter Head 15
Installation requirements
  Cone Antenna Gauge 31
  LPG/LNG Gauge 40
  Parabolic Antenna Gauge 34
  Still Pipe Gauge 38
Installation Schedule 30
Intrinsic safety 10
Inventory Data 30

J

JB 12 28
JB 16 29
JB 36 29
JB 8 28
Junction Box 54, 55
Junction Boxes 28

L

LCD-display 9
List of Drawings 57
Local Readout Display 21
Local Readout Display (LCD) 9
Low-loss radar mode 18
LPG/LNG Gauge
  Description 19
  Installation requirements 40
  Mechanical Installation 50

M

Mechanical Installation
  Horn Antenna Gauge 42
  List of Drawings 57
  LPG/LNG Gauge 50
  Parabolic Antenna Gauge 44
  Still Pipe Gauge 47
Mechanical installation 42
Metrological Seal 15
Mouse 58

N

New Tanks
  Parabolic Antenna Gauge 36
  Still Pipe Gauge 39

O

Obstacles 32
Operating system 58
Operator's Interface 8, 9, 58
OPI 9
OS/2 58

P

Parabolic Antenna Gauge
  Description 17
  Installation requirements 34
  Mechanical Installation 44
Parabolic Reflector 45
Pipe Cone 50, 51
Pipe inner diameter 38
Pipe schedule 38
Plant Host Computer 8, 29
Plant Host Computer System 58
Power Supply
  Field Connection Unit 26
  Independent DAU 23
  Radar Tank Gauge 14
Power supply 53

Pressure Measurement
LPG/LNG Gauge 40
Pressure sealing
LPG/LNG Gauge 19
Protocol 58
Pt100 59

R

Radar beam
Cone Antenna Gauge 32
Parabolic Antenna Gauge 35, 37
Radar Tank Gauge 9
RAM requiremnt 58
Reference height 58
Reference Pins 19, 40, 41, 50
Reference Plug 19
Reference resistance 21
References
LPG/LNG Gauge 40
Reflector Plug 40
Relay 23
Relay outputs 55
Relays 23
Required System Information 58
Required System Information Form 31
Resistance Temperature Detectors 59
RS-232C 56
RS-232C Group Bus 25
RTDs 20
RTG 9
RTG 2920 ..... 16, 42
RTG 2930 ..... 17, 44
RTG 2940 ..... 18, 47
RTG 2960 ..... 19, 50

S

Safety 10
Schedule 38
Sealing Strips
Parabolic Antenna Gauge 44
Shielding 55
Slave Data Acquisition Unit
Description 22
Slave DAU 20
Socket Requirements
Horn Antenna Gauge 33
Parabolic Antenna Gauge 37
Still pipe 40, 51
Area of the slots 39
LPG/LNG Gauge 50
Still Pipe Gauge 18
Description 18
Installation requirements 38
Mechanical Installation 47
Still Pipe Requirements 38
Supply voltage switch
Data Acquisition Unit 23
Field Communication Unit 26
Radar Tank Gauge 14
System Configuration 58
System Master 58

T

Tank Data 58
Tank Reference Height 58
Tank Reference Point 58
Temperature Measurement
LPG/LNG Gauge 40
Temperature measurement 20, 21
Temperature Range 21
Temperature sensors 20, 55, 59
Transition Cone 38
Transmitter Head 12

V

Voltage drop 53
Voltage selection 53
Voltage switch 53

W

W11 54
W12 54
Waveguide Connection 49
Waveguide Unit
LPG/LNG Gauge 51
Parabolic Antenna Gauge 44
Still Pipe Gauge 48
Welding neck flange 36
Write Inhibit/Enable Switch
DAUs 21
Field Connection Unit 26

Notes: