MEASUREMENT REPORT

FCC ID	:	**KA2BR560A1**
Applicant	:	**D-Link Corporation**
Application Type	:	**Certification**
Product	:	**AX6000 Wi-Fi 6 SOHO Router**
Model No.	:	**DBR-560, DBR-560/x, DBR-560/xx, DBR-560/xxx (x can be 0-9, A-Z)**
Brand Name	:	**D-Link**
FCC Classification	:	**Digital Transmission System (DTS)**
FCC Rule Part(s)	:	**Part15 Subpart C (Section 15.247)**
Received Date	:	**February 20, 2025**
Test Date	:	**March 27, 2025~May 24, 2025**

Tested By : Owen Tsai

(Owen Tsai)

Reviewed By : Paddy Chen

(Paddy Chen)

Approved By : Chenz Ker

(Chenz Ker)

Testing Laboratory
3261

The test results relate only to the samples tested.

This equipment has been shown to be capable of compliance with the applicable technical standards as indicated in the measurement report and was tested in accordance with the measurement procedures specified in ANSI C63.10-2013. Test results reported herein relate only to the item(s) tested.

The test report shall not be reproduced except in full without the written approval of MRT Technology (Taiwan) Co., Ltd.

Revision History

Report No.	Version	Description	Issue Date	Note
2502TWL805-U2	1.0	Original Report	2025-07-14	

CONTENTS

Description Page

1. INTRODUCTION 6

1.1. Scope 6
1.2. MRT Test Location 6

2. PRODUCT INFORMATION 7

2.1. Feature of Equipment under Test 7
2.2. Product Specification Subjective to this Report 7
2.3. Working Frequencies for this report 8
2.4. Description of Available Antennas 9
2.5. Test Mode 10
2.6. Configuration of Test System 11
2.7. Test System Details 12
2.8. Description of Test Software 12
2.9. Applied Standards 12
2.10. Duty Cycle 13
2.11. Test Configuration 14
2.12. EMI Suppression Device(s)/Modifications 14
2.13. Labeling Requirements 14

3. DESCRIPTION of TEST 15

3.1. Evaluation Procedure 15
3.2. AC Line Conducted Emissions 15
3.3. Radiated Emissions 16

4. ANTENNA REQUIREMENTS 17

5. TEST EQUIPMENT CALIBRATION DATE 18

6. MEASUREMENT UNCERTAINTY 19

7. TEST RESULT 20

7.1. Summary 20
7.2. 6dB Bandwidth Measurement 21
7.2.1. Test Limit 21
7.2.2. Test Procedure used 21
7.2.3. Test Setting 21
7.2.4. Test Setup 21
7.2.5. Test Result 22
7.3. Output Power Measurement 23

7.3.1. Test Limit 26
7.3.2. Test Procedure Used 26
7.3.3. Test Setting 26
7.3.4. Test Setup 26
7.3.5. Test Result 27
7.4. Power Spectral Density Measurement 30
7.4.1. Test Limit 30
7.4.2. Test Procedure Used 30
7.4.3. Test Setting 30
7.4.4. Test Setup 31
7.4.5. Test Result 32
7.5. Conducted Band Edge and Out-of-Band Emissions 33
7.5.1. Test Limit 57
7.5.2. Test Procedure Used 57
7.5.3. Test Setting 57
7.5.4. Test Setup 58
7.5.5. Test Result 59
7.6. Radiated Spurious Emission Measurement 84
7.6.1. Test Limit 84
7.6.2. Test Procedure Used 84
7.6.3. Test Setting 84
7.6.4. Test Setup 86
7.6.5. Test Result 87
7.7. Radiated Restricted Band Edge Measurement 125
7.7.1. Test Limit 125
7.7.2. Test Procedure Used 126
7.7.3. Test Setting 126
7.7.4. Test Setup 127
7.7.5. Test Result 128
7.8. AC Conducted Emissions Measurement 232
7.8.1. Test Limit 232
7.8.2. Test Setup 232
7.8.3. Test Result 233

8. CONCLUSION 235

Appendix A : Test Setup Photograph 236

Appendix B : External Photograph 236

Appendix C : Internal Photograph 236

General Information

Applicant	D-Link Corporation
Applicant Address	14420 Myford Road Suite 100 Irvine California United States 92606
Manufacturer	D-Link Corporation
Manufacturer Address	14420 Myford Road Suite 100 Irvine California United States 92606
Test Site	MRT Technology (Taiwan) Co., Ltd
Test Site Address	No. 38, Fuxing Second Rd., Guishan Dist., Taoyuan City 333, Taiwan (R.O.C)
MRT FCC Registration No.	291082
FCC Rule Part(s)	Part 15.247

Test Facility / Accreditations

1. MRT facility is a FCC registered (Reg. No. 291082) test facility with the site description report on file and is designated by the FCC as an Accredited Test Firm.
2. MRT facility is an IC registered (MRT Reg. No. 21723) test laboratory with the site description on file at Industry Canada.
3. MRT Lab is accredited to ISO 17025 by the Taiwan Accreditation Foundation (TAF Cert. No. 3261) in EMC, Telecommunications and Radio testing for FCC (Designation Number: TW3261), Industry Canada, EU and TELEC Rules.

1. INTRODUCTION

1.1. Scope

Measurement and determination of electromagnetic emissions (EMC) of radio frequency devices including intentional and/or unintentional radiators for compliance with the technical rules and regulations of the Federal Communications Commission and the Innovation, Science and Economic Development Canada and Certification and Engineering Bureau.

1.2. MRT Test Location

The map below shows the location of the MRT LABORATORY, its proximity to the Taoyuan City. These measurement tests were conducted at the MRT Technology (Taiwan) Co., Ltd. Facility located at No.38, Fuxing 2nd Rd., Guishan Dist., Taoyuan City 33377, Taiwan (R.O.C).

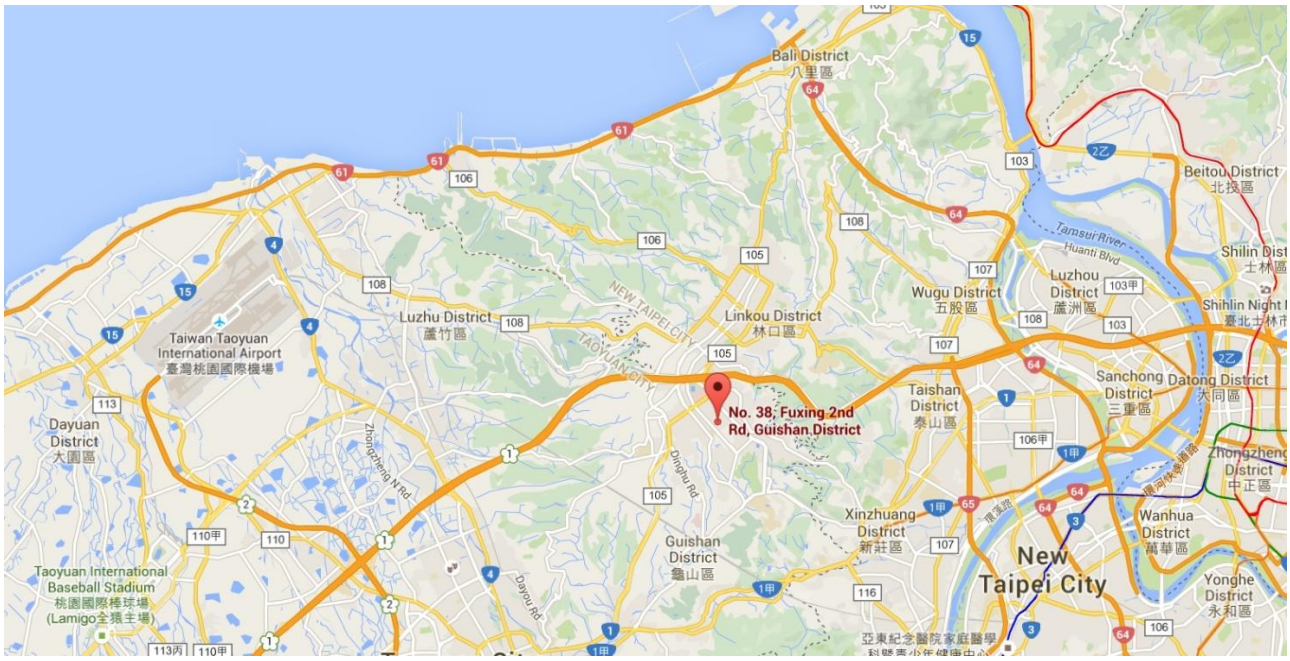

2. PRODUCT INFORMATION

2.1. Feature of Equipment under Test

Product Name:	AX6000 Wi-Fi 6 SOHO Router
Model No.:	DBR-560, DBR-560/x, DBR-560/xx, DBR-560/xxx (x can be 0-9, A-Z)
Brand Name:	D-Link
Wi-Fi Specification:	802.11a/b/g/n/ac/ax
EUT Identification No.:	#1-1 (Conducted) #1-2 (Radiated)
Accessory	
Adapter	Brand: APD Model No: WA-48B12R Input: AC 100-240V~,50-60Hz,1.5A MAX Output: 12.0V⎓4.0A 48.0W DC Cable Out: Non-Shielded, 1.1m

Note:

1.Model Difference: The difference of models only for different customers, the other hardware was the same. (declared by the manufacturer)

2.The test was performed base on DBR-560.

2.2. Product Specification Subjective to this Report

Frequency Range:	802.11b/g/n-HT20/ax-HE20: 2412 ~ 2462MHz 802.11n-HT40/ax-HE40: 2422 ~ 2452MHz
Channel Number:	802.11b/g/n-HT20/ax-HE20: 11 802.11n-HT40/ax-HE40: 7
Type of Modulation:	802.11b: DSSS 802.11g/n: OFDM 802.11ax: OFDMA
Data Rate:	802.11b: 1/2/5.5/11Mbps 802.11g: 6/9/12/18/24/36/48/54Mbps 802.11n: up to 600Mbps 802.11ax: up to 1147.1Mbps

Note: For other features of this EUT, test report will be issued separately.

2.3. Working Frequencies for this report

802.11b/g/n-HT20/ax-HE20

Channel	Frequency	Channel	Frequency	Channel	Frequency
01	2412 MHz	02	2417 MHz	03	2422 MHz
04	2427 MHz	05	2432 MHz	06	2437 MHz
07	2442 MHz	08	2447 MHz	09	2452 MHz
10	2457 MHz	11	2462 MHz	--	--

802.11n-HT40/ax-HE40

Channel	Frequency	Channel	Frequency	Channel	Frequency
03	2422 MHz	04	2427 MHz	05	2432 MHz
06	2437 MHz	07	2442 MHz	08	2447 MHz
09	2452 MHz	--	--	--	--

2.4. Description of Available Antennas

Antenna Type	Frequency Band (MHz)	T_X Paths	Number of spatial streams	Max Antenna Gain (dBi)	Beamforming Directional Gain(dBi)	CDD Directional Gain (dBi)	
						For Power	For PSD
Wi-Fi Antenna							
PCB	2412 ~ 2462	4	1	6.41	12.43	6.41	12.43
	5150 ~ 5250	4	1	6.95	12.97	6.95	12.97
	5250 ~ 5350	4	1	6.95	12.97	6.95	12.97
	5470 ~ 5725	4	1	6.95	12.97	6.95	12.97
	5725 ~ 5850	4	1	6.95	12.97	6.95	12.97

Remark:

1. The EUT supports Cyclic Delay Diversity (CDD) mode, and CDD signals are correlated.

   If all antennas have the same gain, G_{ANT}, Directional gain = G_{ANT} + Array Gain, where Array Gain is as follows.

   - For power spectral density (PSD) measurements on all devices,

   Array Gain = 10 log (N_{ANT}/ N_{SS}) dB;

   - For power measurements on IEEE 802.11 devices,

   Array Gain = 0 dB for $N_{ANT} \leq 4$;

2. All messages of antenna were declared by manufacturer.

2.5. Test Mode

CDD Mode
Mode 1: Transmit by 802.11b_N_{SS}=1 (1Mbps) (CDD mode)
Mode 2: Transmit by 802.11g_ N_{SS}=1 (6Mbps) (CDD mode)
Mode 3: Transmit by 802.11n-HT20_ N_{SS}=1 (MCS0) (CDD mode)
Mode 4: Transmit by 802.11n-HT40_ N_{SS}=1 (MCS0) (CDD mode)
Mode 5: Transmit by 802.11ax-HE20_ N_{SS}=1 (MCS0) (CDD mode)
Mode 6: Transmit by 802.11ax-HE40_ N_{SS}=1 (MCS0) (CDD mode)
Beamforming Mode
Mode 7: Transmit by 802.11ax-HE20_N_{SS}=1 (MCS0) (Beam-Forming mode)
Mode 8: Transmit by 802.11ax-HE40_N_{SS}=1 (MCS0) (Beam-Forming mode)
Remark: 1. For Radiated emission, the modulation and the data rate picked for testing are determined by the Max. RF conducted power. 2. This device supports 4 N_{SS} and power level of 4 N_{SS} is less than or equal to the power of 1 N_{SS}. The worst case is N_{SS}=1. 3. Due to CDD mode was the worst mode, so all test items were evaluated in this report. The beamforming mode only evaluated the RF output power. 4. EUT supports one configuration only in 802.11ax full RU mode. 5. As Designated by manufacturer, the lowest data rate was the worst condition, so all the tests were done with lowest data rate.

2.6. Configuration of Test System

The device was tested per the guidance ANSI C63.10: 2013 was used to reference the appropriate EUT setup for radiated emissions testing and AC line conducted testing.

Connection Diagram

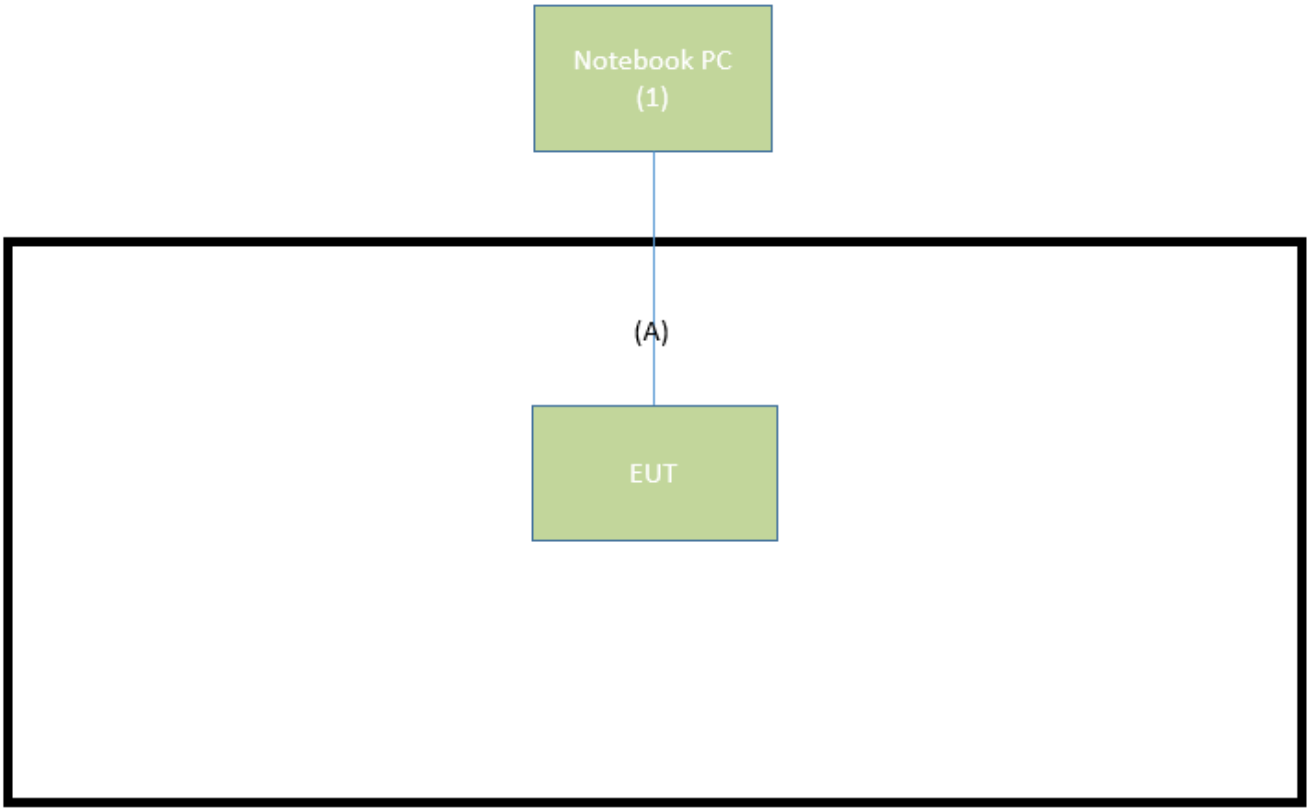

Signal Cable Type		Signal Cable Description
A	LAN Cable	Non- Shielded, 3.0m

2.7. Test System Details

The types for all equipments, plus descriptions of all cables used in the tested system (including inserted cards) are:

Product		Manufacturer	Model No.	Serial No.	Power Cord
1	Notebook PC	Lenovo	20SL	N/A	Non-shielded, 0.8m

2.8. Description of Test Software

The test utility software used during testing was “QA Tool”, the version is ver2.78.

Note: Final power setting please refer to operational description.

2.9. Applied Standards

According to the specifications of the manufacturer, the EUT must comply with the requirements of the following standards:

- FCC Part 15.247
- KDB 662911 D01v02r01
- ANSI C63.10-2013

2.10. Duty Cycle

2.4GHz WLAN (DTS) operation is possible in 20MHz and 40MHz channel bandwidths. The maximum achievable duty cycles for all modes were determined based on measurements performed on a spectrum analyzer in zero-span mode with RBW = 8MHz, VBW = 50MHz. The RBW and VBW were both greater than 50/T, where T is the minimum transmission duration, and the number of sweep points across T was greater than 100. The duty cycles are as follows:

Test Mode	Duty Cycle
802.11b	99.41%
802.11g	96.09%
802.11n-HT20	95.98%
802.11n-HT40	86.14%
802.11ax-HE20	84.62%
802.11ax-HE40	84.57%

Duty Cycle	
802.11b	802.11g
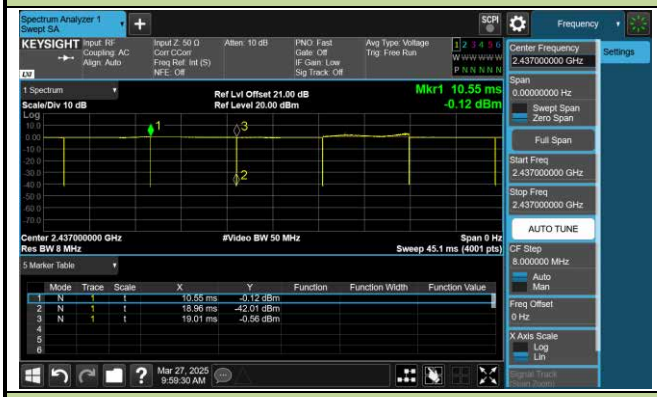	
802.11n-HT20	802.11n-HT40
	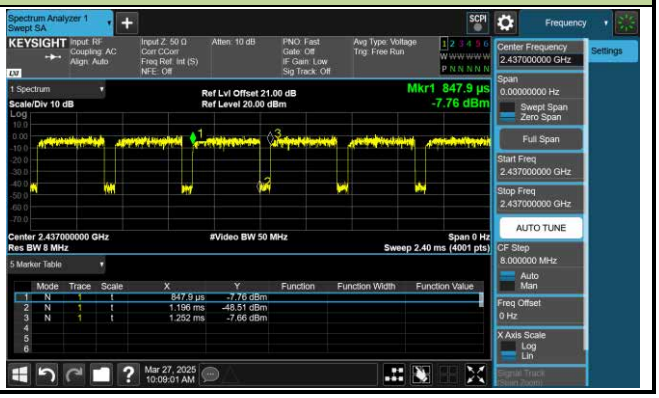

802.11ax-HE20	802.11ax-HE40
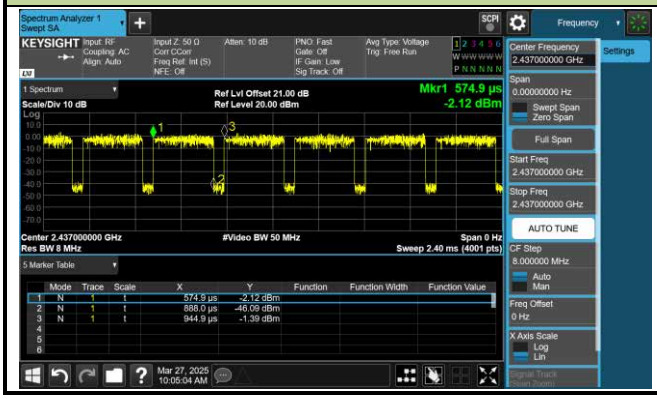	

2.11. Test Configuration

The device was tested per the guidance of ANSI C63.10-2013. ANSI C63.10-2013 was used to reference the appropriate EUT setup for radiated spurious emissions testing and AC line conducted testing.

2.12. EMI Suppression Device(s)/Modifications

No EMI suppression device(s) were added and/or no modifications were made during testing.

2.13. Labeling Requirements

<u>Per 2.1074 & 15.19; Docket 95-19</u>

The label shall be permanently affixed at a conspicuous location on the device; instruction manual or pamphlet supplied to the user and be readily visible to the purchaser at the time of purchase. However, when the device is so small wherein placement of the label with specified statement is not practical, only the FCC ID must be displayed on the device per Section 15.19(a)(5). Please see attachment for FCC ID label and label location.

3. DESCRIPTION of TEST

3.1. Evaluation Procedure

The measurement procedures described in the American National Standard of Procedures for Compliance Testing of Unlicensed Wireless Devices (ANSI C63.10-2013), and the guidance was used in the measurement.

3.2. AC Line Conducted Emissions

The line-conducted facility is located inside an 8'x4'x4' shielded enclosure. A 1m x 2m wooden table 80cm high is placed 40cm away from the vertical wall and 80cm away from the sidewall of the shielded room. Two 10kHz-30MHz, 50Ω/50uH Line-Impedance Stabilization Networks (LISNs) are bonded to the shielded room floor. Power to the LISNs is filtered by external high-current high-insertion loss power line filters. These filters attenuate ambient signal noise from entering the measurement lines. These filters are also bonded to the shielded enclosure.

The EUT is powered from one LISN and the support equipment is powered from the second LISN. All interconnecting cables more than 1 meter were shortened to a 1 meter length by non-inductive bundling (serpentine fashion) and draped over the back edge of the test table. All cables were at least 40cm above the horizontal reference ground-plane. Power cables for support equipment were routed down to the second LISN while ensuring that that cables were not draped over the second LISN.

Sufficient time for the EUT, support equipment, and test equipment was allowed in order for them to warm up to their normal operating condition. The RF output of the LISN was connected to the receiver and exploratory measurements were made to determine the frequencies producing the maximum emission from the EUT. The receiver was scanned from 150kHz to 30MHz. The detector function was set to peak mode for exploratory measurements while the bandwidth of the analyzer was set to 9kHz. The EUT, support equipment, and interconnecting cables were arranged and manipulated to maximize each emission. Each emission was also maximized by varying power lines, the mode of operation or data exchange speed, or support equipment whichever determined the worst-case emission. Once the worst-case emissions have been identified, the one EUT cable configuration/arrangement and mode of operation that produced these emissions are used for final measurements on the same test site. The analyzer is set to CISPR quasi-peak and average detectors with a 9kHz resolution bandwidth for final measurements.

An extension cord was used to connect to a single LISN which powered by EUT. The extension cord was calibrated with LISN, the impedance and insertion loss are compliance with the requirements as stated in ANSI C63.10-2013.

3.3. Radiated Emissions

The radiated test facilities consisted of an indoor 3 meter semi-anechoic chamber used for final measurements and exploratory measurements, when necessary. The measurement area is contained within the semi-anechoic chamber which is shielded from any ambient interference. For measurements above 1GHz absorbers are arranged on the floor between the turn table and the antenna mast in such a way so as to maximize the reduction of reflections. For measurements below 1GHz, the absorbers are removed. A MF Model 210SS turntable is used for radiated measurement. It is a continuously rotatable, remote controlled, metallic turntable and 2 meters (6.56 ft.) in diameter. The turn table is flush with the raised floor of the chamber in order to maintain its function as a ground plane. An 80cm high PVC support structure is placed on top of the turntable.

For all measurements, the spectrum was scanned through all EUT azimuths and from 1 to 4 meter receive antenna height using a broadband antenna from 30MHz up to the upper frequency shown in 15.33(b)(1) depending on the highest frequency generated or used in the device or on which the device operates or tunes. For frequencies above 1GHz, linearly polarized double ridge horn antennas were used. For frequencies below 30MHz, a calibrated loop antenna was used. When exploratory measurements were necessary, they were performed at 1 meter test distance inside the semi-anechoic chamber using broadband antennas, broadband amplifiers, and spectrum analyzers to determine the frequencies and modes producing the maximum emissions. Sufficient time for the EUT, support equipment, and test equipment was allowed in order for them to warm up to their normal operating condition. The test set-up for frequencies below 1GHz was placed on top of the 0.8 meter high, 1 x 1.5 meter table; and test set-up for frequencies 1-40GHz was placed on top of the 1.5 meter high, 1 x 1.5 meter table. The EUT, support equipment, and interconnecting cables were arranged and manipulated to maximize each emission. Appropriate precaution was taken to ensure that all emissions from the EUT were maximized and investigated. The system configuration, clock speed, mode of operation or video resolution, if applicable, turntable azimuth, and receive antenna height was noted for each frequency found.

Final measurements were made in the semi-anechoic chamber using calibrated, linearly polarized broadband and horn antennas. The test setup was configured to the setup that produced the worst case emissions. The spectrum analyzer was set to investigate all frequencies required for testing to compare the highest radiated disturbances with respect to the specified limits. The turntable containing the EUT was rotated through 360 degrees and the height of the receive antenna was varied 1 to 4 meters and stopped at the azimuth and height producing the maximum emission. Each emission was maximized by changing the orientation of the EUT through three orthogonal planes and changing the polarity of the receive antenna, whichever produced the worst-case emissions. According to 3dB Beam-Width of horn antenna, the horn antenna should be always directed to the EUT when rising height.

4. ANTENNA REQUIREMENTS

Excerpt from §15.203 of the FCC Rules/Regulations:

"An intentional radiator antenna shall be designed to ensure that no antenna other than that furnished by the responsible party can be used with the device. The use of a permanently attached antenna or of an antenna that uses a unique coupling to the intentional radiator shall be considered sufficient to comply with the provisions of this section."

- The antenna of the device is **permanently attached.**
- There are no provisions for connection to an external antenna.

Conclusion:

The unit complies with the requirement of §15.203.

5. TEST EQUIPMENT CALIBRATION DATE

Conducted Emissions

Instrument	Manufacturer	Type No.	Asset No.	Cali. Interval	Cali. Due Date
Two-Line V-Network	R&S	ENV216	MRTTWA00019	1 year	2026/3/5
Two-Line V-Network	R&S	ENV216	MRTTWA00020	1 year	2026/4/14
EMI Test Receiver	R&S	ESR3	MRTTWA00045	1 year	2026/5/13
Cable	Rosnol	N1C50-RG400-B 1C50-500CM	MRTTWE00013	1 year	2025/6/14

Radiated Emissions

Instrument	Manufacturer	Type No.	Asset No.	Cali. Interval	Cali. Due Date
Active Loop Antenna	SCHWARZBECK	FMZB 1519B	MRTTWA00002	1 year	2026/4/16
Broadband TRILOG Antenna	SCHWARZBECK	VULB 9162	MRTTWA00086	1 year	2025/11/5
Broadband Hornantenna	RFSPIN	DRH18-E	MRTTWA00087	1 year	2026/5/14
Broadband Preamplifier	EMC Instruments corporation	EMC118A45SE	MRTTWA00088	1 year	2026/5/12
Breitband Hornantenna	SCHWARZBECK	BBHA 9170	MRTTWA00004	1 year	2026/3/27
Broadband Amplifier	SCHWARZBECK	BBV 9721	MRTTWA00006	1 year	2026/3/20
EMI Test Receiver	R&S	ESR3	MRTTWA00009	1 year	2026/3/4
Signal Analyzer	R&S	FSVA3044	MRTTWA00092	1 year	2025/6/20
Antenna Cable	HUBERSUHNER	SF106	MRTTWE00034	1 year	2025/6/25
Cable	HUBERSUHNER	EMC105-NM-NM -3000	MRTTWE00035	1 year	2025/6/25
Temperature/Humidity Meter	TFA	35.1083	MRTTWA00050	1 year	2025/6/2

Conducted Test Equipment

Instrument	Manufacturer	Type No.	Asset No.	Cali. Interval	Cali. Due Date
EXA Signal Analyzer	KEYSIGHT	N9010A	MRTTWA00012	1 year	2025/9/24
EXA Signal Analyzer	KEYSIGHT	N9010B	MRTTWA00074	1 year	2025/8/12
USB Wideband Power Sensor	KEYSIGHT	U2021XA	MRTTWA00015	1 year	2026/3/11

Test Software

Software	Version	Function
e3	9.160520a	EMI Test Software

6. MEASUREMENT UNCERTAINTY

Where relevant, the following test uncertainty levels have been estimated for tests performed on the EUT as specified in CISPR 16-4-2. This uncertainty represents an expanded uncertainty expressed at approximately the 95% confidence level using a coverage factor of k = 2.

AC Conducted Emission Measurement
Measuring Uncertainty for a Level of Confidence of 95% (U=2Uc(y)): 150kHz~30MHz: ± 2.53dB
Radiated Emission Measurement
Measuring Uncertainty for a Level of Confidence of 95% (U=2Uc(y)): 9kHz ~ 1GHz: ± 4.25dB 1GHz ~ 40GHz: ± 4.45dB
Conducted Power (Carrier Power / Power Density)
Measuring Uncertainty for a Level of Confidence of 95% (U=2Uc(y)): ± 0.84dB
Conducted Spurious Emission
Measuring Uncertainty for a Level of Confidence of 95% (U=2Uc(y)): ± 2.65 dB
Occupied Bandwidth
Measuring Uncertainty for a Level of Confidence of 95% (U=2Uc(y)): ± 3.3%
Temp. / Humidity
Measuring Uncertainty for a Level of Confidence of 95% (U=2Uc(y)): ±0.82°C/ ±3%

7. TEST RESULT

7.1. Summary

FCC Section(s)	Test Description	Test Limit	Test Condition	Test Result	Reference
15.247(a)(2)	6dB Bandwidth	≥ 500kHz	Conducted	Pass	Section 7.2
15.247(b)(3)	Output Power	≤ 30dBm		Pass	Section 7.3
15.247(e)	Power Spectral Density	≤ 8dBm/3kHz		Pass	Section 7.4
15.247(d)	Band Edge / Out-of-Band Emissions	≥ 30dBc (Average)		Pass	Section 7.5
15.205 15.209	General Field Strength Limits (Restricted Bands and Radiated Emission Limits)	Emissions in restricted bands must meet the radiated limits detailed in 15.209	Radiated	Pass	Section 7.6 & 7.7
15.207	AC Conducted Emissions 150kHz - 30MHz	< FCC 15.207 limits	Line Conducted	Pass	Section 7.8

Notes:

1) Determining compliance is based on the test results met the regulation limits or requirements declared by clients, and the test results don't take into account the value of measurement uncertainty.
2) The analyzer plots shown in this section were all taken with a correction table loaded into the analyzer. The correction table was used to account for the losses of the cables and attenuators used as part of the system to connect the EUT to the analyzer at all frequencies of interest.
3) Output power test was verified over all data rates of each mode (data refers to operational description), and then choose the maximum power output (low data rate) for final test of each channel.
4) For radiated emission test, every axis (X, Y, Z) was also verified. The test results shown in the following sections represent the worst-case emissions.
5) EUT supports one configuration only in 802.11ax full RU mode, i.e. 242 tone in 11ax-HE20 and 484 tone in 11ax-HE40.

7.2. 6dB Bandwidth Measurement

7.2.1.Test Limit

The minimum 6dB bandwidth shall be at least 500 kHz.

7.2.2.Test Procedure used

ANSI C63.10 - 2013 Section 11.8

7.2.3.Test Setting

1. The Spectrum's automatic bandwidth measurement capability was used to perform the 6dB bandwidth measurement. The "X" dB bandwidth parameter was set to X = 6. The bandwidth measurement was not influenced by any intermediate power nulls in the fundamental emission.
2. Set RBW = 100 kHz
3. VBW ≥ 3 × RBW
4. Detector = Peak
5. Trace mode = max hold
6. Sweep = auto couple
7. Allow the trace was allowed to stabilize

7.2.4.Test Setup

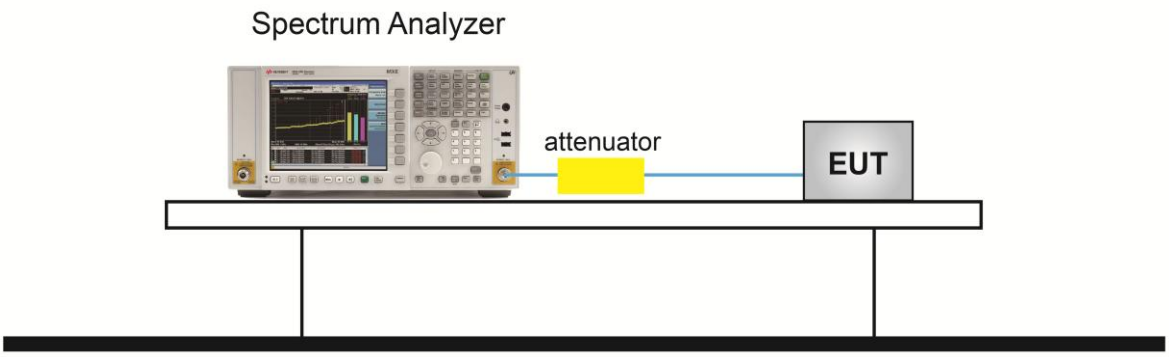

7.2.5.Test Result

Product	AX6000 Wi-Fi 6 SOHO Router	Temperature	25°C
Test Engineer	Fran	Relative Humidity	54%
Test Site	SR7	Test Date	2025/5/7

Test Mode	Data Rate / MCS	Channel No.	Frequency (MHz)	6dB Bandwidth (MHz)	Limit (MHz)	Result
Ant 1						
802.11b	1Mbps	01	2412	8.056	≥ 0.5	Pass
802.11b	1Mbps	06	2437	8.060	≥ 0.5	Pass
802.11b	1Mbps	11	2462	8.049	≥ 0.5	Pass
802.11g	6Mbps	01	2412	15.07	≥ 0.5	Pass
802.11g	6Mbps	06	2437	15.05	≥ 0.5	Pass
802.11g	6Mbps	11	2462	15.12	≥ 0.5	Pass
802.11n-HT20	MCS0	01	2412	15.69	≥ 0.5	Pass
802.11n-HT20	MCS0	06	2437	16.06	≥ 0.5	Pass
802.11n-HT20	MCS0	11	2462	15.65	≥ 0.5	Pass
802.11n-HT40	MCS0	03	2422	35.04	≥ 0.5	Pass
802.11n-HT40	MCS0	06	2437	35.11	≥ 0.5	Pass
802.11n-HT40	MCS0	09	2452	35.09	≥ 0.5	Pass
802.11ax-HE20	MCS0	01	2412	15.59	≥ 0.5	Pass
802.11ax-HE20	MCS0	06	2437	15.57	≥ 0.5	Pass
802.11ax-HE20	MCS0	11	2462	15.09	≥ 0.5	Pass
802.11ax-HE40	MCS0	03	2422	35.04	≥ 0.5	Pass
802.11ax-HE40	MCS0	06	2437	35.12	≥ 0.5	Pass
802.11ax-HE40	MCS0	09	2452	35.12	≥ 0.5	Pass

802.11b 6dB Bandwidth

Channel 01 (2412MHz)

Channel 06 (2437MHz)

Channel 11 (2462MHz)

802.11g 6dB Bandwidth

Channel 01 (2412MHz)

Channel 06 (2437MHz)

Channel 11 (2462MHz)

802.11n-HT20 6dB Bandwidth

Channel 01 (2412MHz)

Channel 06 (2437MHz)

Channel 11 (2462MHz)

802.11n-HT40 6dB Bandwidth

Channel 03 (2422MHz)

Channel 06 (2437MHz)

Channel 09 (2452MHz)

802.11ax-HE20 6dB Bandwidth

Channel 01 (2412MHz)

Channel 06 (2437MHz)

Channel 11 (2462MHz)

802.11ax-HE40 6dB Bandwidth

Channel 03 (2422MHz)

Channel 06 (2437MHz)

Channel 09 (2452MHz)

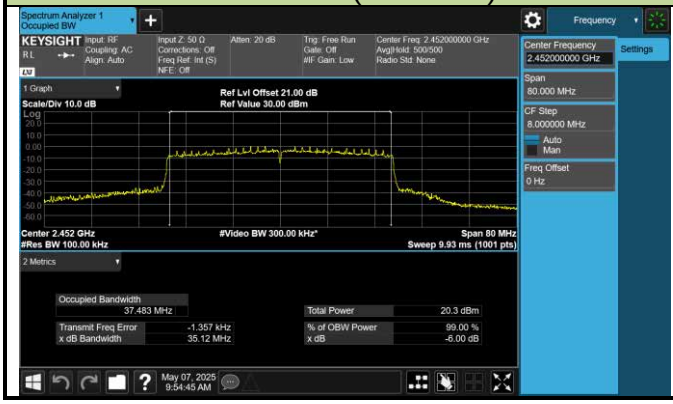

7.3. Output Power Measurement

7.3.1.Test Limit

The maximum output power shall be less 1 Watt (30dBm).

The conducted output power limit specified in paragraph FCC Part 15.247(b) of this section is based on the use of antennas with directional gains that do not exceed 6 dBi. If transmitting antennas of directional gain greater than 6 dBi are used, the conducted output power from the intentional radiator shall be reduced below the stated values in paragraphs FCC Part 15.247(b)(3) of this section, as appropriate, by the amount in dB that the directional gain of the antenna exceeds 6 dBi.

7.3.2.Test Procedure Used

ANSI C63.10 - 2013 Section 11.9.2.3.2

7.3.3.Test Setting

Average Power Measurement

Average power measurements were performed only when the EUT was transmitting at its maximum power control level using a broadband power meter with a pulse sensor. The power meter implemented triggering and gating capabilities which were set up such that power measurements were recorded only during the ON time of the transmitter.

7.3.4.Test Setup

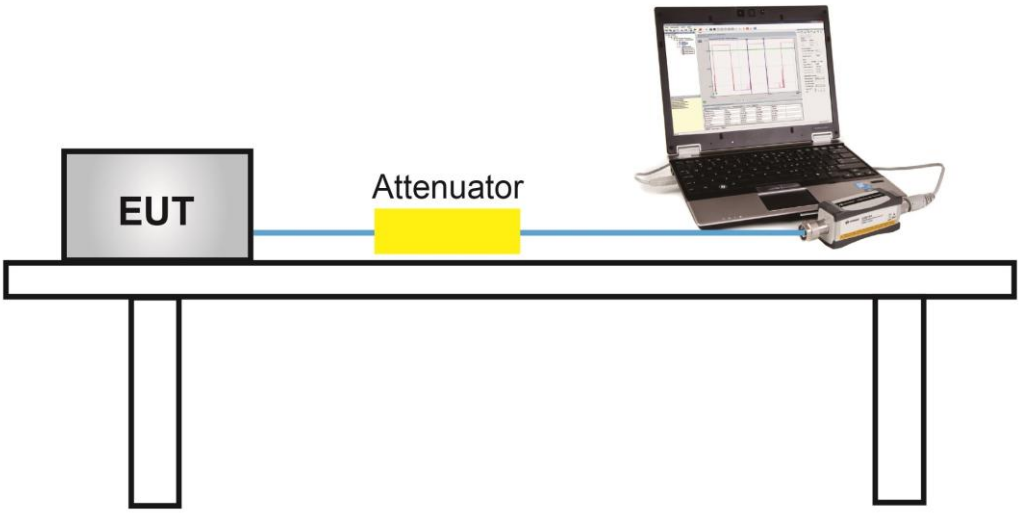

7.3.5.Test Result

Product	AX6000 Wi-Fi 6 SOHO Router	Temperature	25°C
Test Engineer	Fran	Relative Humidity	54%
Test Site	SR7	Test Date	2025/5/6

Test Mode	Data Rate/ MCS	Channel No.	Freq. (MHz)	Ant 0	Ant 1	Ant 2	Ant 3	Total Average Power (dBm)	Limit (dBm)	Result
				Average Power (dBm)						
CDD Mode										
802.11b	1Mbps	01	2412	18.47	22.12	18.94	18.02	25.74	≤ 29.59	Pass
802.11b	1Mbps	06	2437	20.83	21.87	19.39	19.70	26.58	≤ 29.59	Pass
802.11b	1Mbps	11	2462	21.32	22.24	19.96	20.09	27.03	≤ 29.59	Pass
802.11g	6Mbps	01	2412	19.76	20.69	18.18	18.89	25.50	≤ 29.59	Pass
802.11g	6Mbps	06	2437	22.86	23.57	21.60	21.52	28.50	≤ 29.59	Pass
802.11g	6Mbps	11	2462	19.94	20.71	19.73	19.91	26.11	≤ 29.59	Pass
802.11n-HT20	MCS0	01	2412	19.71	20.15	18.43	18.93	25.38	≤ 29.59	Pass
802.11n-HT20	MCS0	06	2437	22.47	23.22	21.68	21.81	28.36	≤ 29.59	Pass
802.11n-HT20	MCS0	11	2462	19.71	20.70	18.89	19.12	25.68	≤ 29.59	Pass
802.11n-HT40	MCS0	03	2422	14.89	15.03	13.52	13.72	20.36	≤ 29.59	Pass
802.11n-HT40	MCS0	04	2427	16.52	17.84	14.73	15.37	22.30	≤ 29.59	Pass
802.11n-HT40	MCS0	05	2432	18.65	20.01	17.32	17.94	24.62	≤ 29.59	Pass
802.11n-HT40	MCS0	06	2437	19.95	20.40	18.15	19.01	25.48	≤ 29.59	Pass
802.11n-HT40	MCS0	08	2447	17.91	19.21	16.30	16.62	23.69	≤ 29.59	Pass
802.11n-HT40	MCS0	09	2452	15.82	15.84	14.31	14.52	21.20	≤ 29.59	Pass
802.11ax-HE20	MCS0	01	2412	17.82	18.98	16.22	16.96	23.64	≤ 29.59	Pass
802.11ax-HE20	MCS0	02	2417	21.20	22.67	19.74	20.52	27.19	≤ 29.59	Pass
802.11ax-HE20	MCS0	06	2437	23.44	24.24	22.48	22.94	29.35	≤ 29.59	Pass
802.11ax-HE20	MCS0	10	2457	22.78	24.03	21.61	22.05	28.74	≤ 29.59	Pass
802.11ax-HE20	MCS0	11	2462	18.24	19.16	17.15	17.30	24.06	≤ 29.59	Pass
802.11ax-HE40	MCS0	03	2422	14.70	15.14	13.23	13.64	20.27	≤ 29.59	Pass
802.11ax-HE40	MCS0	04	2427	15.25	16.67	13.72	14.17	21.13	≤ 29.59	Pass
802.11ax-HE40	MCS0	05	2432	17.30	18.83	15.98	16.49	23.31	≤ 29.59	Pass
802.11ax-HE40	MCS0	06	2437	19.61	19.93	18.02	18.35	25.07	≤ 29.59	Pass
802.11ax-HE40	MCS0	08	2447	16.52	17.92	14.99	15.60	22.42	≤ 29.59	Pass
802.11ax-HE40	MCS0	09	2452	15.05	15.30	13.55	13.82	20.52	≤ 29.59	Pass

Note: Total Average Power (dBm) = 10*log {$10^{(\text{Ant 0 Average Power /10})}$ +$10^{(\text{Ant 1 Average Power /10})}$ +$10^{(\text{Ant 2 Average Power /10})}$ +$10^{(\text{Ant 3 Average Power /10})}$}.

Product	AX6000 Wi-Fi 6 SOHO Router	Temperature	25°C
Test Engineer	Fran	Relative Humidity	54%
Test Site	SR7	Test Date	2025/5/6

Test Mode	Data Rate/ MCS	Channel No.	Freq. (MHz)	Ant 0	Ant 1	Ant 2	Ant 3	Total Average Power (dBm)	Limit (dBm)	Result
				Average Power (dBm)						
Beamforming Mode										
802.11ax-HE20	MCS0	01	2412	17.22	18.62	16.53	16.18	23.26	≤ 23.57	Pass
802.11ax-HE20	MCS0	02	2417	17.30	18.04	15.56	16.21	22.90	≤ 23.57	Pass
802.11ax-HE20	MCS0	06	2437	17.68	18.88	16.11	16.64	23.48	≤ 23.57	Pass
802.11ax-HE20	MCS0	10	2457	17.08	18.12	16.06	16.38	23.00	≤ 23.57	Pass
802.11ax-HE20	MCS0	11	2462	17.44	18.69	16.27	16.57	23.37	≤ 23.57	Pass
802.11ax-HE40	MCS0	03	2422	14.70	15.14	13.23	13.64	20.27	≤ 23.57	Pass
802.11ax-HE40	MCS0	04	2427	15.25	16.67	13.72	14.17	21.13	≤ 23.57	Pass
802.11ax-HE40	MCS0	05	2432	17.30	18.83	15.98	16.49	23.31	≤ 23.57	Pass
802.11ax-HE40	MCS0	06	2437	17.48	18.72	16.02	16.33	23.29	≤ 23.57	Pass
802.11ax-HE40	MCS0	08	2447	16.52	17.92	14.99	15.60	22.42	≤ 23.57	Pass
802.11ax-HE40	MCS0	09	2452	15.05	15.30	13.55	13.82	20.52	≤ 23.57	Pass

Note: Total Average Power (dBm) = $10*\log \{10^{(\text{Ant 0 Average Power /10})} + 10^{(\text{Ant 1 Average Power /10})} + 10^{(\text{Ant 2 Average Power /10})} + 10^{(\text{Ant 3 Average Power /10})}\}$.

7.4. Power Spectral Density Measurement

7.4.1.Test Limit

The maximum permissible power spectral density is 8dBm in any 3 kHz band.

The same method of determining the conducted output power shall be used to determine the power spectral density.

7.4.2.Test Procedure Used

ANSI C63.10 - 2013 Section 11.10.5

7.4.3.Test Setting

1. Measure the duty cycle (x) of the transmitter output signal.
2. Set instrument center frequency to DTS channel center frequency.
3. Set span to at least 1.5 times the OBW.
4. RBW = 10 kHz.
5. VBW = 30 kHz.
6. Detector = RMS.
7. Ensure that the number of measurement points in the sweep ≥ 2 x span/RBW.
8. Sweep time = auto couple.
9. Don’t use sweep triggering. Allow sweep to “free run”.
10. Employ trace averaging (RMS) mode over a minimum of 100 traces.
11. Use the peak marker function to determine the maximum amplitude level.
12. Add 10 log (1/x), where x is the duty cycle measured in step (a, to the measured PSD to compute the average PSD during the actual transmission time.

7.4.4.Test Setup

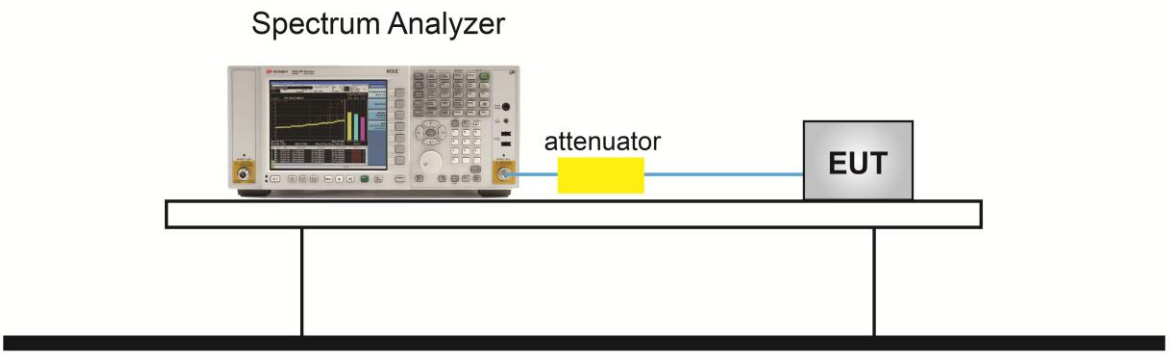

7.4.5.Test Result

Product	AX6000 Wi-Fi 6 SOHO Router	Temperature	25°C
Test Engineer	Fran	Relative Humidity	54%
Test Site	SR7	Test Date	2025/5/6~2025/5/23

Test Mode	Data Rate/ MCS	Channel No.	Freq. (MHz)	Ant 0	Ant 1	Ant 2	Ant 3	Duty Cycle (%)	Total PSD (dBm/ 10kHz)	Limit (dBm/ 3kHz)	Result
				PSD (dBm/ 10kHz)							
802.11b	1Mbps	01	2412	-4.308	-4.040	-6.195	-4.904	99.41%	1.260	≤ 1.57	Pass
802.11b	1Mbps	06	2437	-5.077	-4.411	-5.268	-5.711	99.41%	0.955	≤ 1.57	Pass
802.11b	1Mbps	11	2462	-4.864	-3.719	-4.357	-5.668	99.41%	1.452	≤ 1.57	Pass
802.11g	6Mbps	01	2412	-8.824	-8.018	-9.907	-10.209	96.09%	-2.957	≤ 1.57	Pass
802.11g	6Mbps	06	2437	-4.982	-4.330	-5.480	-6.315	96.09%	0.977	≤ 1.57	Pass
802.11g	6Mbps	11	2462	-6.309	-6.471	-7.580	-8.328	96.09%	-0.901	≤ 1.57	Pass
802.11n-HT20	MCS0	01	2412	-9.035	-6.305	-9.737	-8.330	95.98%	-1.953	≤ 1.57	Pass
802.11n-HT20	MCS0	06	2437	-5.135	-4.055	-5.099	-5.152	95.98%	1.364	≤ 1.57	Pass
802.11n-HT20	MCS0	11	2462	-8.016	-7.199	-8.945	-8.930	95.98%	-2.012	≤ 1.57	Pass
802.11n-HT40	MCS0	03	2422	-15.857	-15.267	-17.941	-17.301	86.14%	-9.791	≤ 1.57	Pass
802.11n-HT40	MCS0	06	2437	-10.777	-10.049	-12.149	-12.719	86.14%	-4.625	≤ 1.57	Pass
802.11n-HT40	MCS0	09	2452	-15.615	-15.638	-17.007	-16.704	86.14%	-9.528	≤ 1.57	Pass
802.11ax-HE20	MCS0	01	2412	-10.049	-10.937	-13.462	-12.416	84.62%	-4.774	≤ 1.57	Pass
802.11ax-HE20	MCS0	06	2437	-4.156	-4.784	-6.513	-6.833	84.62%	1.321	≤ 1.57	Pass
802.11ax-HE20	MCS0	11	2462	-10.370	-10.511	-11.901	-11.946	84.62%	-4.373	≤ 1.57	Pass
802.11ax-HE40	MCS0	03	2422	-15.816	-16.494	-18.861	-17.191	84.57%	-10.203	≤ 1.57	Pass
802.11ax-HE40	MCS0	06	2437	-11.042	-11.647	-13.909	-14.185	84.57%	-5.733	≤ 1.57	Pass
802.11ax-HE40	MCS0	09	2452	-15.738	-15.025	-17.927	-18.295	84.57%	-9.776	≤ 1.57	Pass

Note 1: Total AVGPSD = $10*\log \{10^{(\text{Ant 0 AVGPSD}/10)} + 10^{(\text{Ant 1 AVGPSD}/10)} + 10^{(\text{Ant 2 AVGPSD}/10)} + 10^{(\text{Ant 3 AVGPSD}/10)}\}$ + 10*log (1/Duty Cycle).

802.11b AVGPSD – Ant 0 - CDD Mode	
Channel 01 (2412MHz)	Channel 06 (2437MHz)
Channel 11 (2462MHz)	

802.11g AVGPSD – Ant 0 - CDD Mode	
Channel 01 (2412MHz)	Channel 06 (2437MHz)
Channel 11 (2462MHz)	
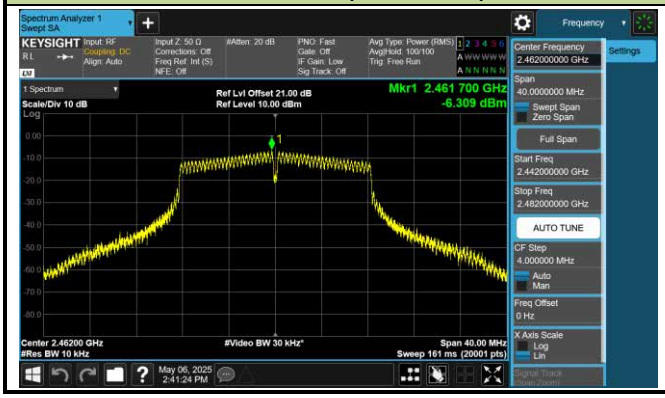	

802.11n-HT20 AVGPSD – Ant 0 - CDD Mode	
Channel 01 (2412MHz)	Channel 06 (2437MHz)
Channel 11 (2462MHz)	

802.11n-HT40 AVGPSD – Ant 0 - CDD Mode	
Channel 03 (2422MHz)	Channel 06 (2437MHz)
Channel 09 (2452MHz)	

802.11ax-HE20 AVGPSD – Ant 0 - CDD Mode	
Channel 01 (2412MHz)	Channel 06 (2437MHz)
Channel 11 (2462MHz)	

802.11ax-HE40 AVGPSD – Ant 0 - CDD Mode	
Channel 03 (2422MHz)	Channel 06 (2437MHz)
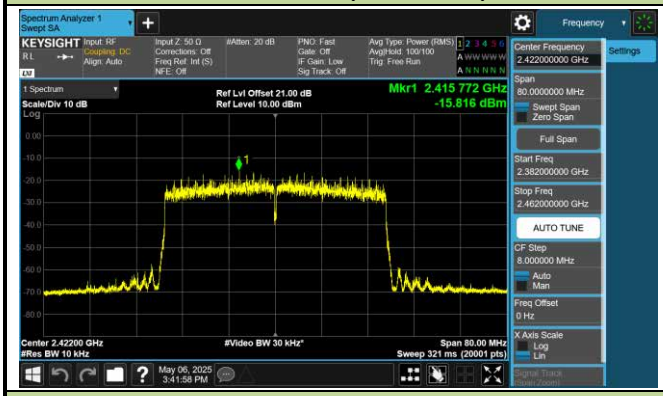	
Channel 09 (2452MHz)	

802.11b AVGPSD – Ant 1 - CDD Mode	
Channel 01 (2412MHz)	Channel 06 (2437MHz)
Channel 11 (2462MHz)	

802.11g AVGPSD – Ant 1 - CDD Mode	
Channel 01 (2412MHz)	Channel 06 (2437MHz)
Channel 11 (2462MHz)	

802.11n-HT20 AVGPSD – Ant 1 - CDD Mode	
Channel 01 (2412MHz)	Channel 06 (2437MHz)
	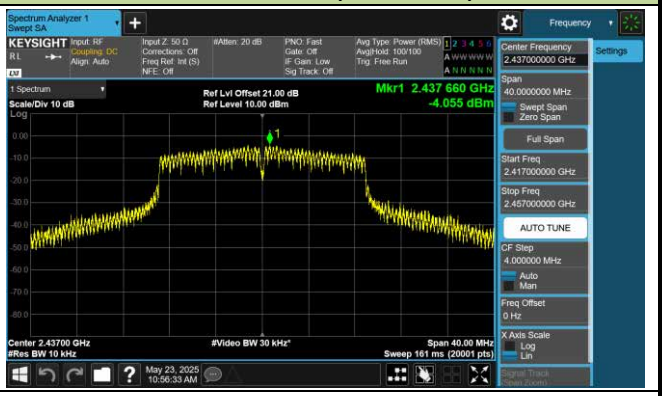
Channel 11 (2462MHz)	

802.11n-HT40 AVGPSD – Ant 1 - CDD Mode	
Channel 03 (2422MHz)	Channel 06 (2437MHz)
Channel 09 (2452MHz)	
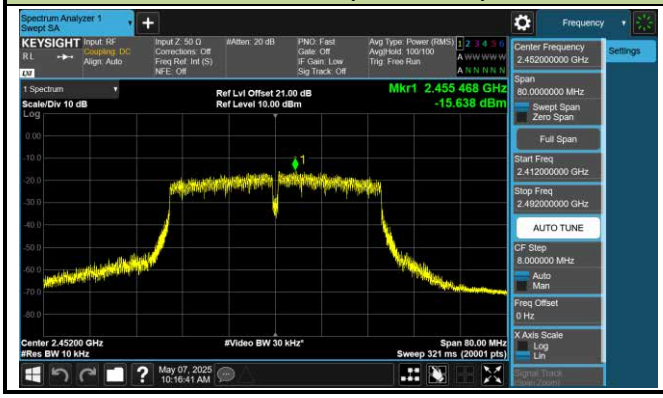	

802.11ax-HE20 AVGPSD – Ant 1 - CDD Mode	
Channel 01 (2412MHz)	Channel 06 (2437MHz)
Channel 11 (2462MHz)	
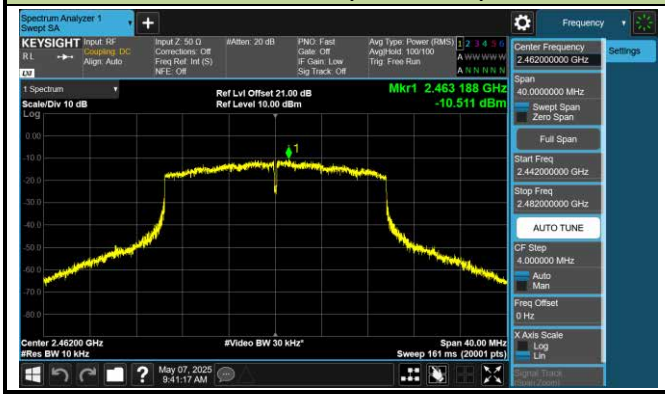	

802.11ax-HE40 AVGPSD – Ant 1 - CDD Mode	
Channel 03 (2422MHz)	Channel 06 (2437MHz)
Channel 09 (2452MHz)	

802.11b AVGPSD – Ant 2 - CDD Mode	
Channel 01 (2412MHz)	Channel 06 (2437MHz)
Channel 11 (2462MHz)	

802.11g AVGPSD – Ant 2 - CDD Mode	
Channel 01 (2412MHz)	Channel 06 (2437MHz)
Channel 11 (2462MHz)	
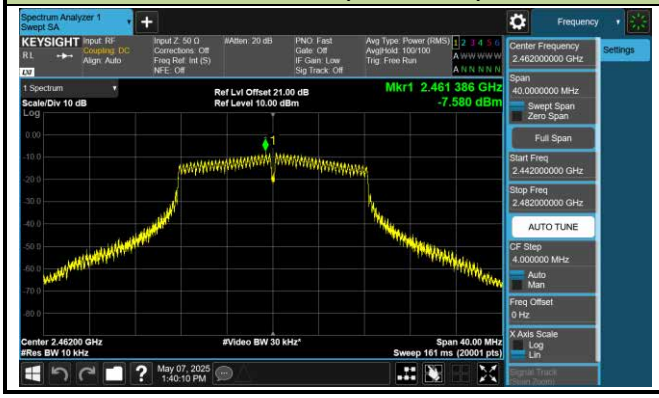	

802.11n-HT20 AVGPSD – Ant 2 - CDD Mode	
Channel 01 (2412MHz)	Channel 06 (2437MHz)
Channel 11 (2462MHz)	

802.11n-HT40 AVGPSD – Ant 2 - CDD Mode	
Channel 03 (2422MHz)	Channel 06 (2437MHz)
Channel 09 (2452MHz)	
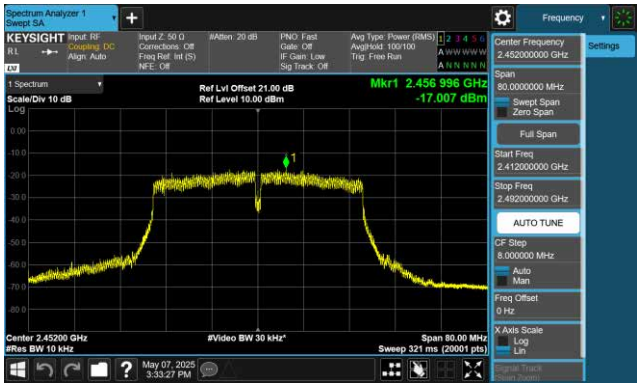	

802.11ax-HE20 AVGPSD – Ant 2 - CDD Mode	
Channel 01 (2412MHz)	Channel 06 (2437MHz)
Channel 11 (2462MHz)	

802.11ax-HE40 AVGPSD – Ant 2 - CDD Mode	
Channel 03 (2422MHz)	Channel 06 (2437MHz)
Channel 09 (2452MHz)	

802.11b AVGPSD – Ant 3 - CDD Mode	
Channel 01 (2412MHz)	Channel 06 (2437MHz)
Channel 11 (2462MHz)	

802.11g AVGPSD – Ant 3 - CDD Mode	
Channel 01 (2412MHz)	Channel 06 (2437MHz)
Channel 11 (2462MHz)	
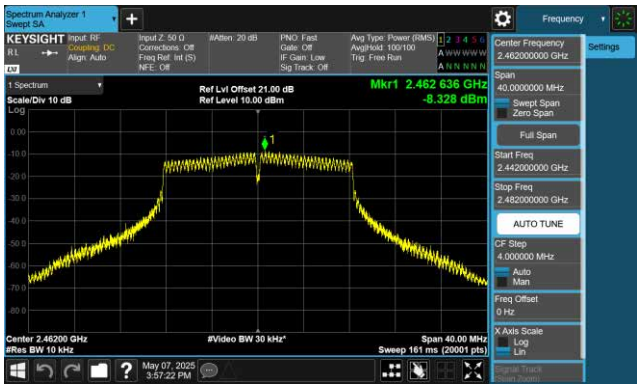	

802.11n-HT20 AVGPSD – Ant 3 - CDD Mode	
Channel 01 (2412MHz)	Channel 06 (2437MHz)
Channel 11 (2462MHz)	

802.11n-HT40 AVGPSD – Ant 3 - CDD Mode	
Channel 03 (2422MHz)	Channel 06 (2437MHz)
Channel 09 (2452MHz)	

802.11ax-HE20 AVGPSD – Ant 3 - CDD Mode	
Channel 01 (2412MHz)	Channel 06 (2437MHz)
Channel 11 (2462MHz)	

802.11ax-HE40 AVGPSD – Ant 3 - CDD Mode	
Channel 03 (2422MHz)	Channel 06 (2437MHz)
Channel 09 (2452MHz)	
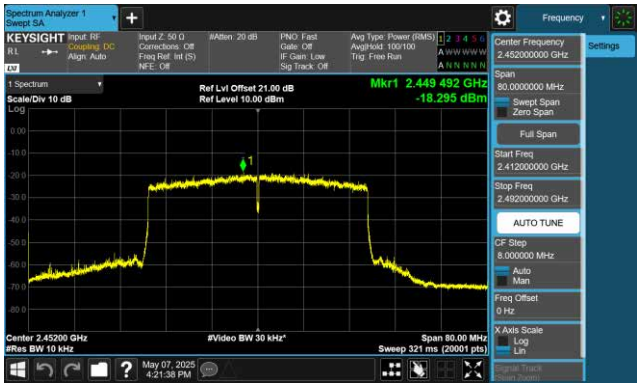	

7.5. Conducted Band Edge and Out-of-Band Emissions

7.5.1.Test Limit

The limit for out-of-band spurious emissions at the band edge is 30dB below the fundamental emission level, as determined from the in-band power measurement of the DTS channel performed in a 100 kHz bandwidth per the PSD procedure.

7.5.2.Test Procedure Used

ANSI C63.10 - 2013 Section 11.11

7.5.3.Test Setting

Reference level measurement

1. Set instrument center frequency to DTS channel center frequency
2. Set the span to ≥ 1.5 times the DTS bandwidth
3. Set the RBW = 100 kHz
4. Set the VBW ≥ 3 x RBW
5. Detector = peak
6. Sweep time = auto couple
7. Trace mode = max hold
8. Allow trace to fully stabilize

Emission level measurement

1. Set the center frequency and span to encompass frequency range to be measured
2. RBW = 100kHz
3. VBW = 300kHz
4. Detector = Peak
5. Trace mode = max hold
6. Sweep time = auto couple
7. The trace was allowed to stabilize

7.5.4.Test Setup

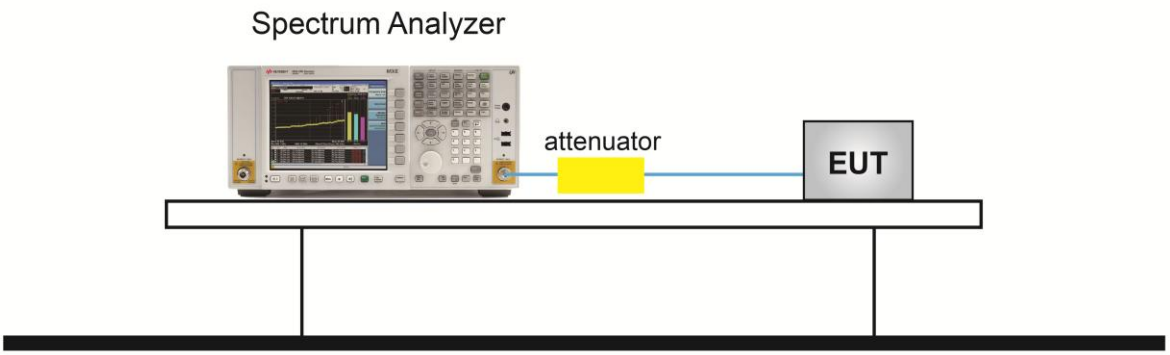

7.5.5.Test Result

Product	AX6000 Wi-Fi 6 SOHO Router	Temperature	25°C
Test Engineer	Fran	Relative Humidity	54%
Test Site	SR7	Test Date	2025/5/6~2025/5/7

Test Mode	Data Rate / MCS	Channel No.	Frequency (MHz)	Limit (dBc)	Result
802.11b	1Mbps	01	2412	30	Pass
802.11b	1Mbps	06	2437	30	Pass
802.11b	1Mbps	11	2462	30	Pass
802.11g	6Mbps	01	2412	30	Pass
802.11g	6Mbps	06	2437	30	Pass
802.11g	6Mbps	11	2462	30	Pass
802.11n-HT20	MCS0	01	2412	30	Pass
802.11n-HT20	MCS0	06	2437	30	Pass
802.11n-HT20	MCS0	11	2462	30	Pass
802.11n-HT40	MCS0	03	2422	30	Pass
802.11n-HT40	MCS0	06	2437	30	Pass
802.11n-HT40	MCS0	09	2452	30	Pass
802.11ax-HE20	MCS0	01	2412	30	Pass
802.11ax-HE20	MCS0	06	2437	30	Pass
802.11ax-HE20	MCS0	11	2462	30	Pass
802.11ax-HE40	MCS0	03	2422	30	Pass
802.11ax-HE40	MCS0	06	2437	30	Pass
802.11ax-HE40	MCS0	09	2452	30	Pass

Ant 0	
802.11 b CH01 (2412MHz)	**802.11 b CH01 (2412MHz)**
802.11 b CH06 (2437MHz)	**802.11 b CH06 (2437MHz)**
802.11 b CH11 (2462MHz)	**802.11 b CH11 (2462MHz)**

802.11 g CH01 (2412MHz)	802.11 g CH01 (2412MHz)
802.11 g CH06 (2437MHz)	**802.11 g CH06 (2437MHz)**
802.11 g CH11 (2462MHz)	**802.11 g CH11 (2462MHz)**