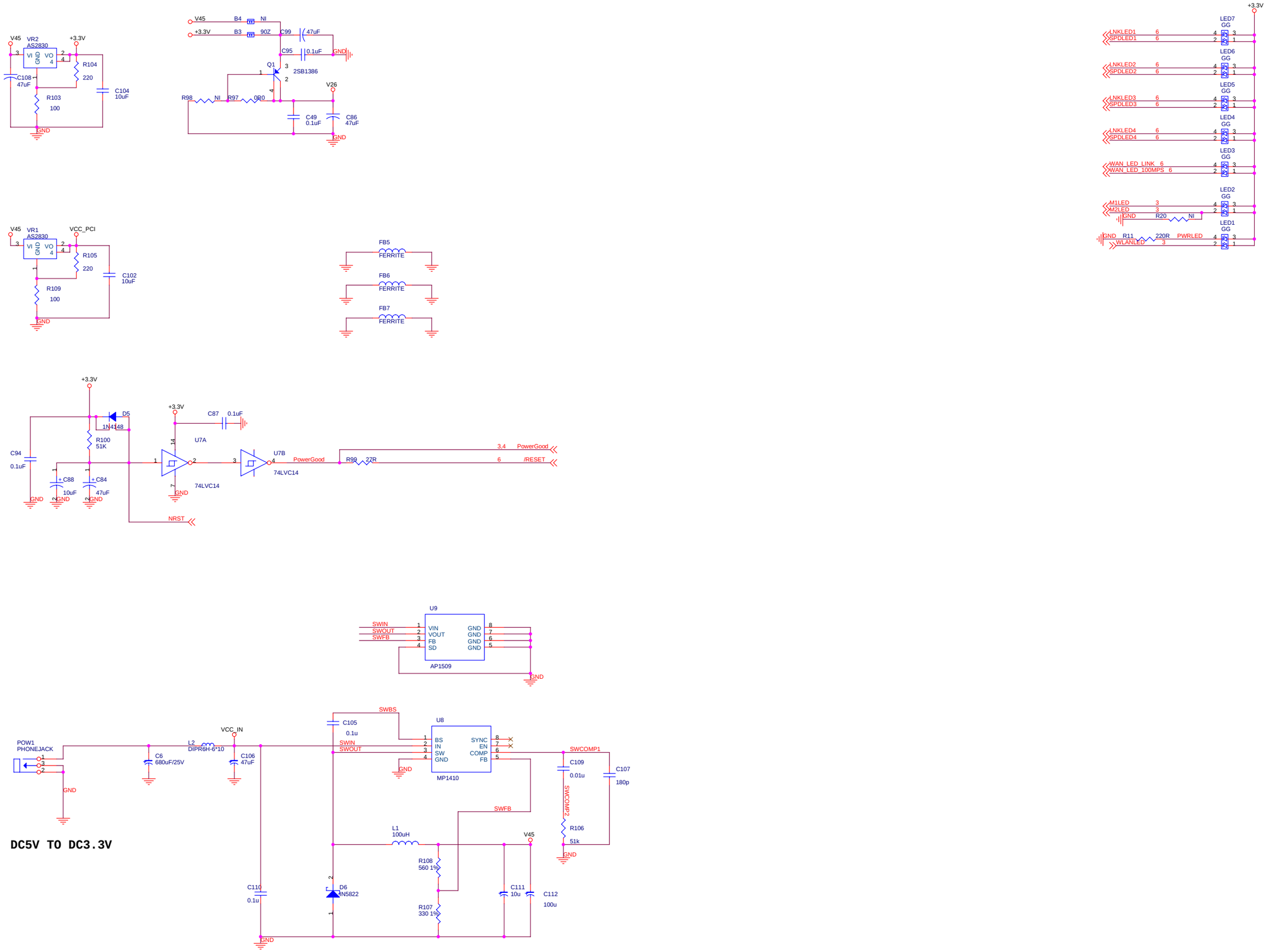
V45
VR2
AS2830
+3.3V
VI
GND
VO
R104
220
C108
47uF
R103
100
C104
10uF
GND
V45
B4
NI
+3.3V
B3
90Z
C99
47uF
C95
0.1uF
GND
Q1
2SB1386
V26
R98
NI
R97
0R0
C49
0.1uF
C86
47uF
GND
V45
VR1
AS2830
VCC_PCI
VI
GND
VO
R105
220
C102
10uF
R109
100
GND
FB5
FERRITE
FB6
FERRITE
FB7
FERRITE
+3.3V
D5
1N4148
R100
51K
C94
0.1uF
C88
10uF
C84
47uF
GND
+3.3V
C87
0.1uF
U7A
74LVC14
U7B
74LVC14
PowerGood
R99
22R
3.4
PowerGood
6
/RESET
NRST
+3.3V
LED7
GG
LNKLED1
SPDLED1
LED6
GG
LNKLED2
SPDLED2
LED5
GG
LNKLED3
SPDLED3
LED4
GG
LNKLED4
SPDLED4
LED3
GG
WAN_LED_LINK
WAN_LED_100MPS
LED2
GG
M1LED
M2LED
GND
R20
NI
LED1
GG
GND
R11
220R
PWRLED
WLANLED
U9
SWIN
SWOUT
SWFB
VIN
VOUT
FB
SD
GND
AP1509
GND
SWBS
C105
0.1u
U8
SWIN
SWOUT
BS
IN
SW
GND
SYNC
EN
COMP
FB
MP1410
GND
SWCOMP1
C109
0.01u
C107
180p
SWCOMP2
R106
51k
GND
POW1
PHONEJACK
GND
L2
DIPR6H-6*10
VCC_IN
C6
680uF/25V
C106
47uF
L1
100uH
SWFB
V45
R108
560 1%
R107
330 1%
C110
0.1u
D6
1N5822
C111
10u
C112
100u
GND
DC5V TO DC3.3V

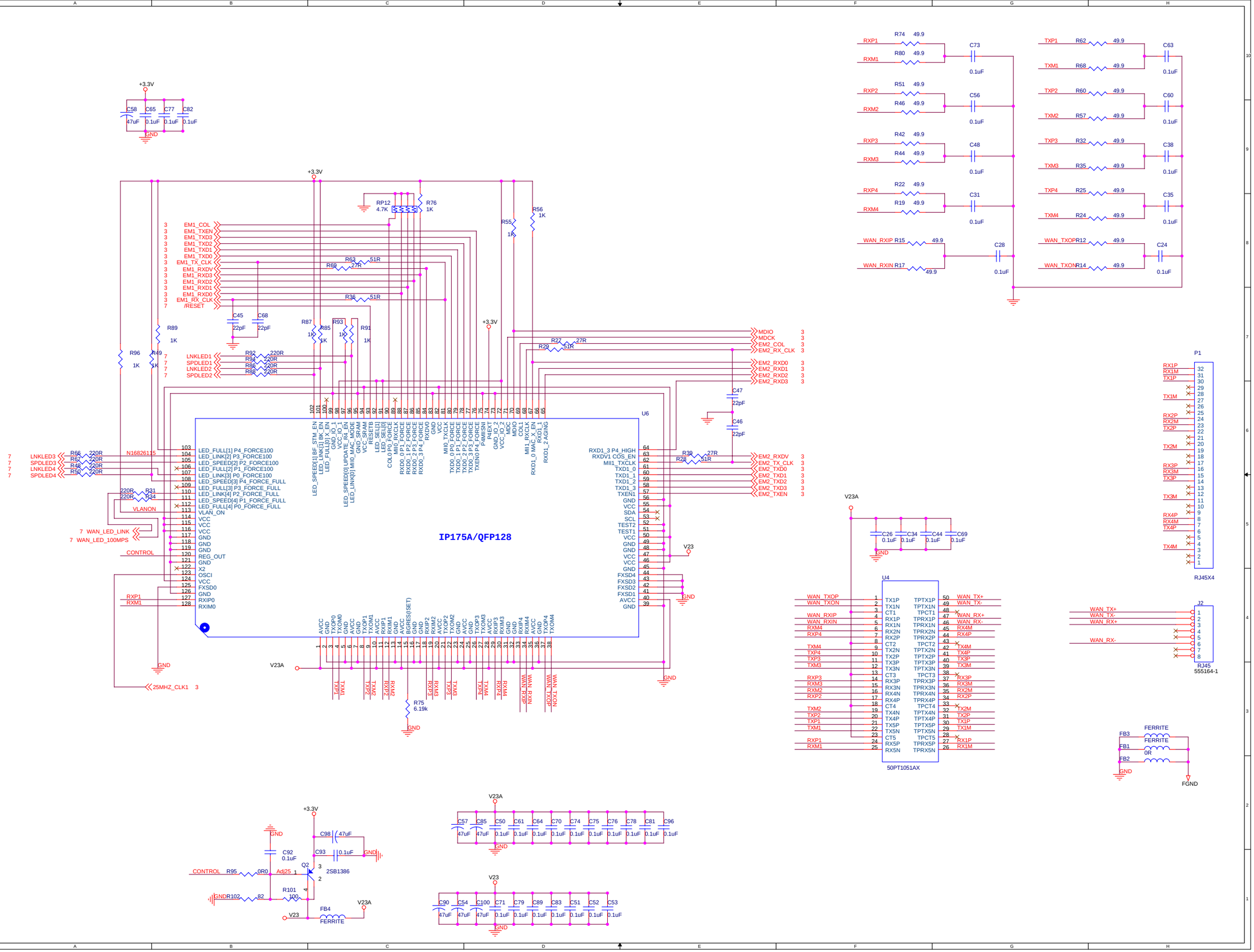
IP175A/QFP128
U6
U4
50PT1051AX
P1
RJ45X4
J2
RJ45
555164-1
V23A
V23
+3.3V
GND
FGND
FERRITE
0R
25MHZ_CLK1
VLANON
CONTROL
WAN_LED_LINK
WAN_LED_100MPS
N16826115
Q2
2SB1386
Adj25
R75
6.19k
R76
1K
RP12
4.7K
R56
1K
R55
1K
C45
22pF
C68
22pF
C47
22pF
C46
22pF
C73
0.1uF
C63
0.1uF
C56
0.1uF
C60
0.1uF
C48
0.1uF
C38
0.1uF
C31
0.1uF
C35
0.1uF
C28
0.1uF
C24
0.1uF
C58
47uF
C65
0.1uF
C77
0.1uF
C82
0.1uF
C26
0.1uF
C34
0.1uF
C44
0.1uF
C69
0.1uF
C57
47uF
C85
47uF
C50
0.1uF
C61
0.1uF
C64
0.1uF
C70
0.1uF
C74
0.1uF
C75
0.1uF
C76
0.1uF
C78
0.1uF
C81
0.1uF
C96
0.1uF
C90
47uF
C54
47uF
C100
47uF
C71
0.1uF
C79
0.1uF
C89
0.1uF
C83
0.1uF
C51
0.1uF
C52
0.1uF
C53
0.1uF
C98
47uF
C93
0.1uF
C92
0.1uF
R95
0R0
R102
82
R101
100
FB4
FERRITE
FB3
FERRITE
FB1
0R
FB2
R74
49.9
R80
49.9
R51
49.9
R46
49.9
R42
49.9
R44
49.9
R22
49.9
R19
49.9
R15
49.9
R17
49.9
R62
49.9
R68
49.9
R60
49.9
R57
49.9
R32
49.9
R35
49.9
R25
49.9
R24
49.9
R12
49.9
R14
49.9
R66
220R
R62
220R
R48
220R
R50
220R
R31
220R
R34
220R
R92
220R
R94
220R
R86
220R
R88
220R
R63
51R
R69
27R
R36
51R
R27
27R
R29
51R
R39
27R
R28
51R
R89
1K
R96
1K
R49
1K
R87
1K
R85
1K
R93
1K
R91
1K
EM1_COL
EM1_TXEN
EM1_TXD3
EM1_TXD2
EM1_TXD1
EM1_TXD0
EM1_TX_CLK
EM1_RXDV
EM1_RXD3
EM1_RXD2
EM1_RXD1
EM1_RXD0
EM1_RX_CLK
/RESET
LNKLED1
SPDLED1
LNKLED2
SPDLED2
LNKLED3
SPDLED3
LNKLED4
SPDLED4
MDIO
MDCK
EM2_COL
EM2_RX_CLK
EM2_RXD0
EM2_RXD1
EM2_RXD2
EM2_RXD3
EM2_RXDV
EM2_TX_CLK
EM2_TXD0
EM2_TXD1
EM2_TXD2
EM2_TXD3
EM2_TXEN
RXP1
RXM1
RXP2
RXM2
RXP3
RXM3
RXP4
RXM4
WAN_RXIP
WAN_RXIN
TXP1
TXM1
TXP2
TXM2
TXP3
TXM3
TXP4
TXM4
WAN_TXOP
WAN_TXON
WAN_TX+
WAN_TX-
WAN_RX+
WAN_RX-

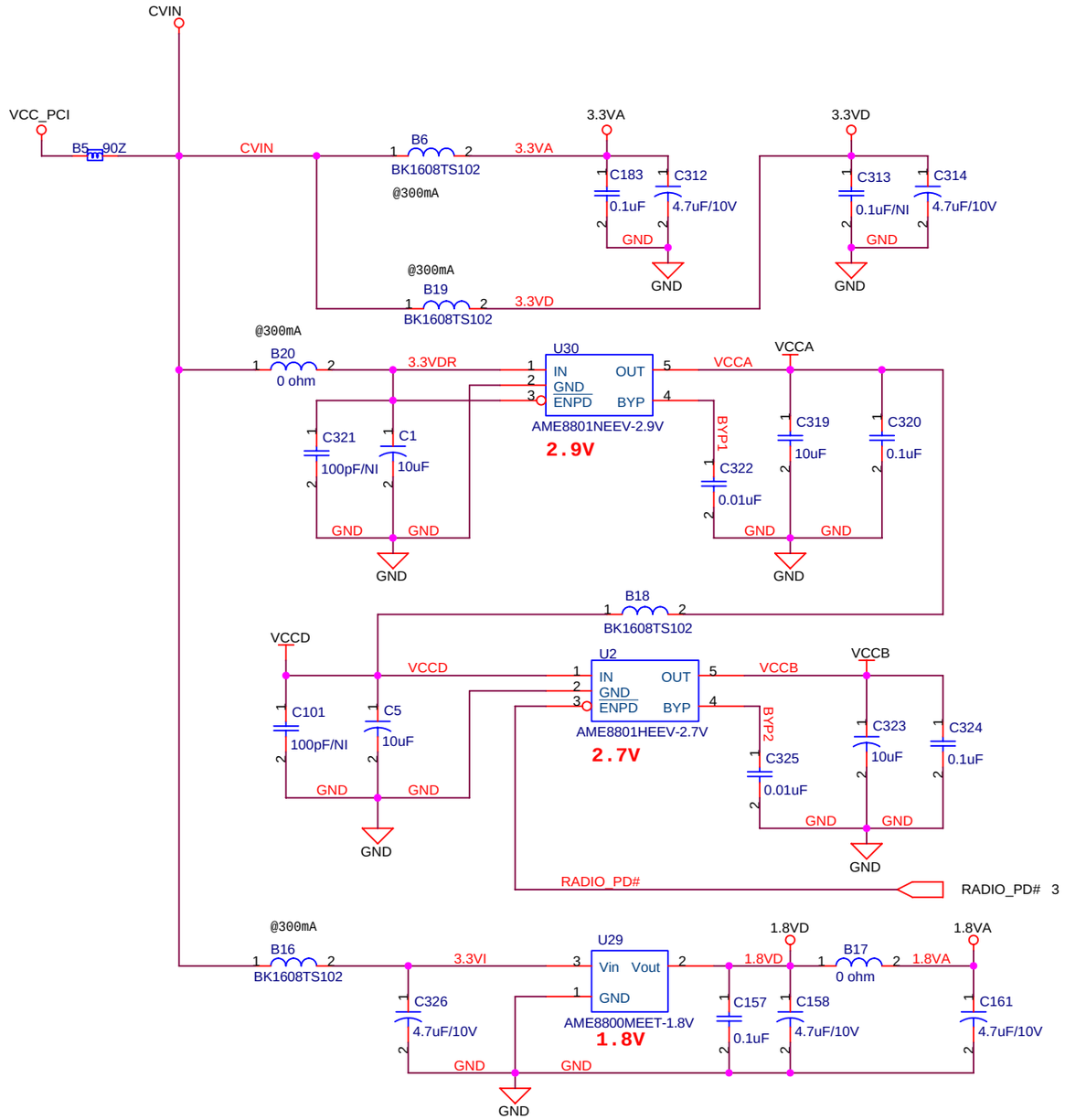
CVIN
VCC_PCI
B5 90Z
CVIN
B6
BK1608TS102
@300mA
3.3VA
C183
0.1uF
C312
4.7uF/10V
GND
3.3VD
C313
0.1uF/NI
C314
4.7uF/10V
@300mA
B19
BK1608TS102
3.3VD
@300mA
B20
0 ohm
3.3VDR
U30
IN
GND
ENPD
OUT
BYP
AME8801NEEV-2.9V
2.9V
VCCA
C321
100pF/NI
C1
10uF
BYP1
C322
0.01uF
C319
10uF
C320
0.1uF
B18
BK1608TS102
VCCD
C101
100pF/NI
C5
10uF
U2
AME8801HEEV-2.7V
2.7V
VCCB
BYP2
C325
0.01uF
C323
10uF
C324
0.1uF
RADIO_PD#
RADIO_PD# 3
@300mA
B16
BK1608TS102
3.3VI
U29
Vin
Vout
GND
AME8800MEET-1.8V
1.8V
1.8VD
B17
0 ohm
1.8VA
C326
4.7uF/10V
C157
0.1uF
C158
4.7uF/10V
C161
4.7uF/10V

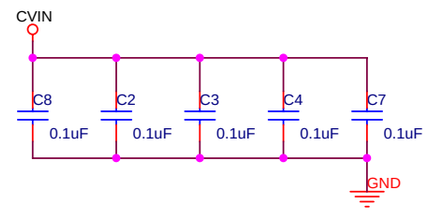
CVIN
C8
0.1uF
C2
0.1uF
C3
0.1uF
C4
0.1uF
C7
0.1uF
GND

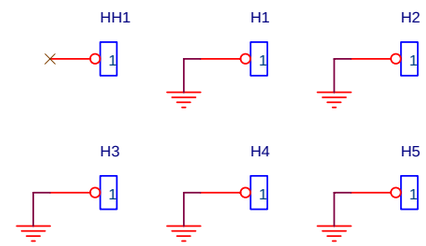
HH1
H1
H2
H3
H4
H5

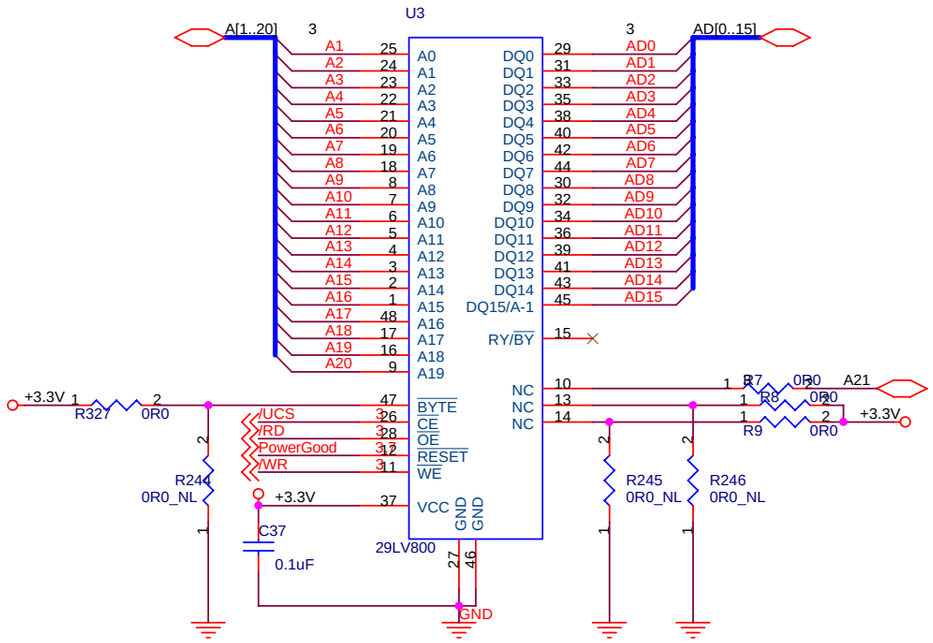
U3
A[1..20]
AD[0..15]
29LV800
A0 A1 A2 A3 A4 A5 A6 A7 A8 A9 A10 A11 A12 A13 A14 A15 A16 A17 A18 A19 A20
DQ0 DQ1 DQ2 DQ3 DQ4 DQ5 DQ6 DQ7 DQ8 DQ9 DQ10 DQ11 DQ12 DQ13 DQ14 DQ15/A-1
AD0 AD1 AD2 AD3 AD4 AD5 AD6 AD7 AD8 AD9 AD10 AD11 AD12 AD13 AD14 AD15
RY/BY
BYTE
CE
OE
RESET
WE
VCC
GND
NC
/UCS
/RD
PowerGood
/WR
+3.3V
R327 0R0
R244 0R0_NL
C37 0.1uF
R245 0R0_NL
R246 0R0_NL
R7 0R0
R8 0R0
R9 0R0
A21

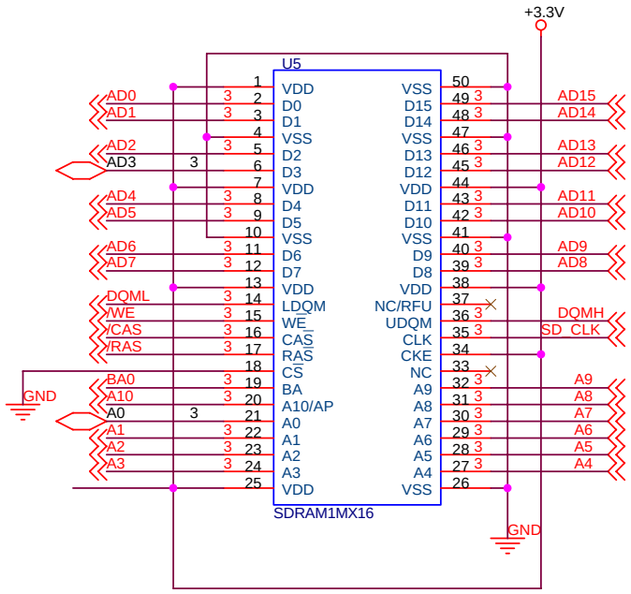
U5
SDRAM1MX16
+3.3V
VDD D0 D1 VSS D2 D3 VDD D4 D5 VSS D6 D7 VDD LDQM WE CAS RAS CS BA A10/AP A0 A1 A2 A3 VDD
VSS D15 D14 VSS D13 D12 VDD D11 D10 VSS D9 D8 VDD NC/RFU UDQM CLK CKE NC A9 A8 A7 A6 A5 A4 VSS
AD0 AD1 AD2 AD3 AD4 AD5 AD6 AD7 DQML /WE /CAS /RAS BA0 A10 A0 A1 A2 A3
AD15 AD14 AD13 AD12 AD11 AD10 AD9 AD8 DQMH SD_CLK A9 A8 A7 A6 A5 A4
GND

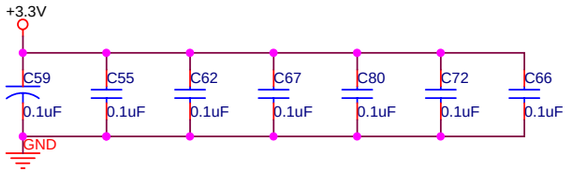
+3.3V
C59 0.1uF
C55 0.1uF
C62 0.1uF
C67 0.1uF
C80 0.1uF
C72 0.1uF
C66 0.1uF
GND

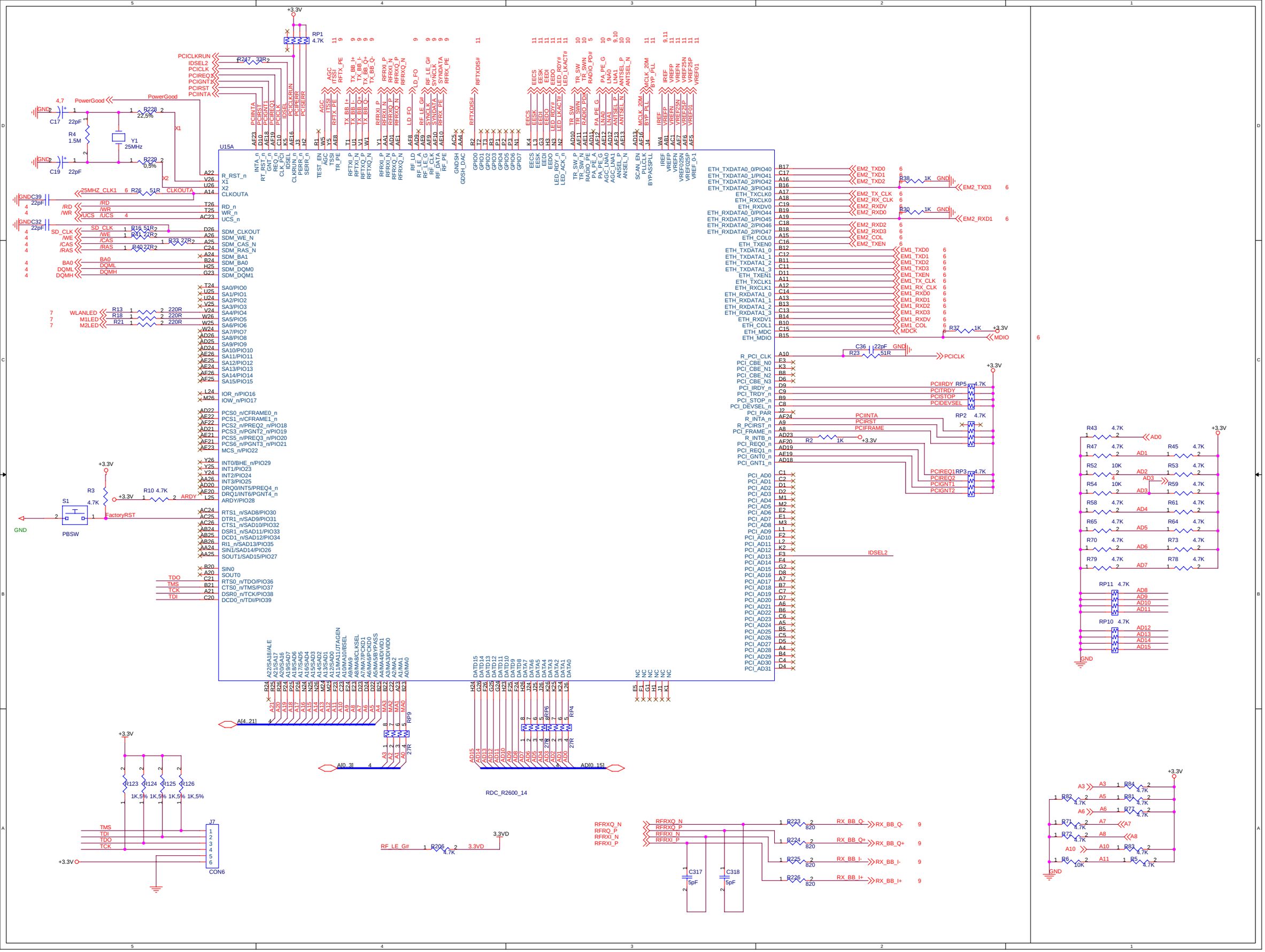
U15A
RDC_R2600_14
PCICLKRUN
IDSEL2
PCICLK
PCIREQ1
PCIGNT1
PCIRST
PCIINTA
PCIIRDY
PCITRDY
PCISTOP
PCIDEVSEL
PCIREQ2
PCIGNT2
PCIFRAME
PCIERR
PCISERR
PowerGood
C17 22pF
C19 22pF
R4 1.5M
Y1 25MHz
R228 22,5%
R229 0,5%
25MHZ_CLK1
CLKOUTA
C39 22pF
C32 22pF
SD_CLK
/WE
/CAS
/RAS
BA0
DQML
DQMH
WLANLED
M1LED
M2LED
ARDY
FactoryRST
S1
PBSW
R3 4.7K
R10 4.7K
TDO
TMS
TCK
TDI
J7
CON6
R123 1K,5%
R124 1K,5%
R125 1K,5%
R126 1K,5%
A[4..21]
A[0..3]
AD[0..15]
RP9
RP6
RP4
27R
RFRXQ_N
RFRQ_P
RFRXI_N
RFRXI_P
RF_LE_G#
R206 4.7K
3.3VD
C317 5pF
C318 5pF
R223 820
R224 820
R225 820
R226 820
RX_BB_Q-
RX_BB_Q+
RX_BB_I-
RX_BB_I+
ETH_TXDATA0_0/PIO40
ETH_TXDATA0_1/PIO41
ETH_TXDATA0_2/PIO42
ETH_TXDATA0_3/PIO43
ETH_TXCLK0
ETH_RXCLK0
ETH_RXDV0
ETH_RXDATA0_0/PIO44
ETH_RXDATA0_1/PIO45
ETH_RXDATA0_2/PIO46
ETH_RXDATA0_3/PIO47
ETH_COL0
ETH_TXEN0
ETH_TXDATA1_0
ETH_TXDATA1_1
ETH_TXDATA1_2
ETH_TXDATA1_3
ETH_TXEN1
ETH_TXCLK1
ETH_RXCLK1
ETH_RXDATA1_0
ETH_RXDATA1_1
ETH_RXDATA1_2
ETH_RXDATA1_3
ETH_RXDV1
ETH_COL1
ETH_MDC
ETH_MDIO
EM2_TXD0
EM2_TXD1
EM2_TXD2
EM2_TXD3
EM2_TX_CLK
EM2_RX_CLK
EM2_RXDV
EM2_RXD0
EM2_RXD1
EM2_RXD2
EM2_RXD3
EM2_COL
EM2_TXEN
EM1_TXD0
EM1_TXD1
EM1_TXD2
EM1_TXD3
EM1_TXEN
EM1_TX_CLK
EM1_RX_CLK
EM1_RXD0
EM1_RXD1
EM1_RXD2
EM1_RXD3
EM1_RXDV
EM1_COL
MDCK
MDIO
R38 1K
R30 1K
R37 1K
R23 51R
C36 22pF
PCICLK
R2 1K
AD0
AD1
AD2
AD3
AD4
AD5
AD6
AD7
AD8
AD9
AD10
AD11
AD12
AD13
AD14
AD15
RP11 4.7K
RP10 4.7K
A3
A5
A6
A7
A8
A10
A11
R84 4.7K
R82 4.7K
R81 4.7K
R77 4.7K
R71 4.7K
R72 4.7K
R83 4.7K
R6 10K
R5 4.7K
GND
+3.3V

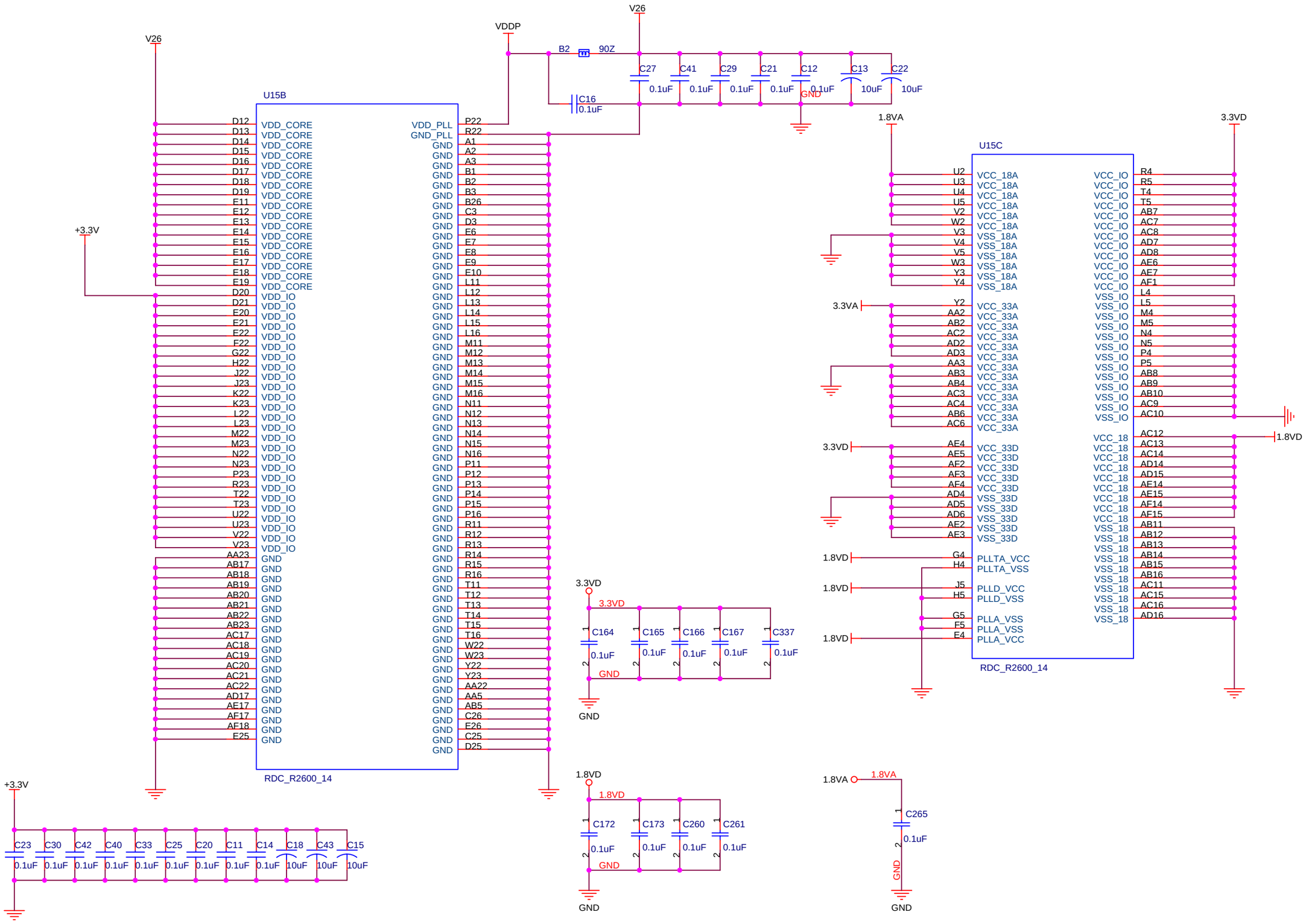
V26
VDDP
B2
90Z
C27
C41
C29
C21
C12
C13
C22
0.1uF
10uF
GND
C16
U15B
VDD_CORE
VDD_IO
GND
VDD_PLL
GND_PLL
RDC_R2600_14
+3.3V
1.8VA
3.3VD
U15C
VCC_18A
VSS_18A
VCC_33A
VCC_33D
VSS_33D
PLLTA_VCC
PLLTA_VSS
PLLD_VCC
PLLD_VSS
PLLA_VSS
PLLA_VCC
VCC_IO
VSS_IO
VCC_18
VSS_18
1.8VD
C164
C165
C166
C167
C337
C23
C30
C42
C40
C33
C25
C20
C11
C14
C18
C43
C15
C172
C173
C260
C261
C265

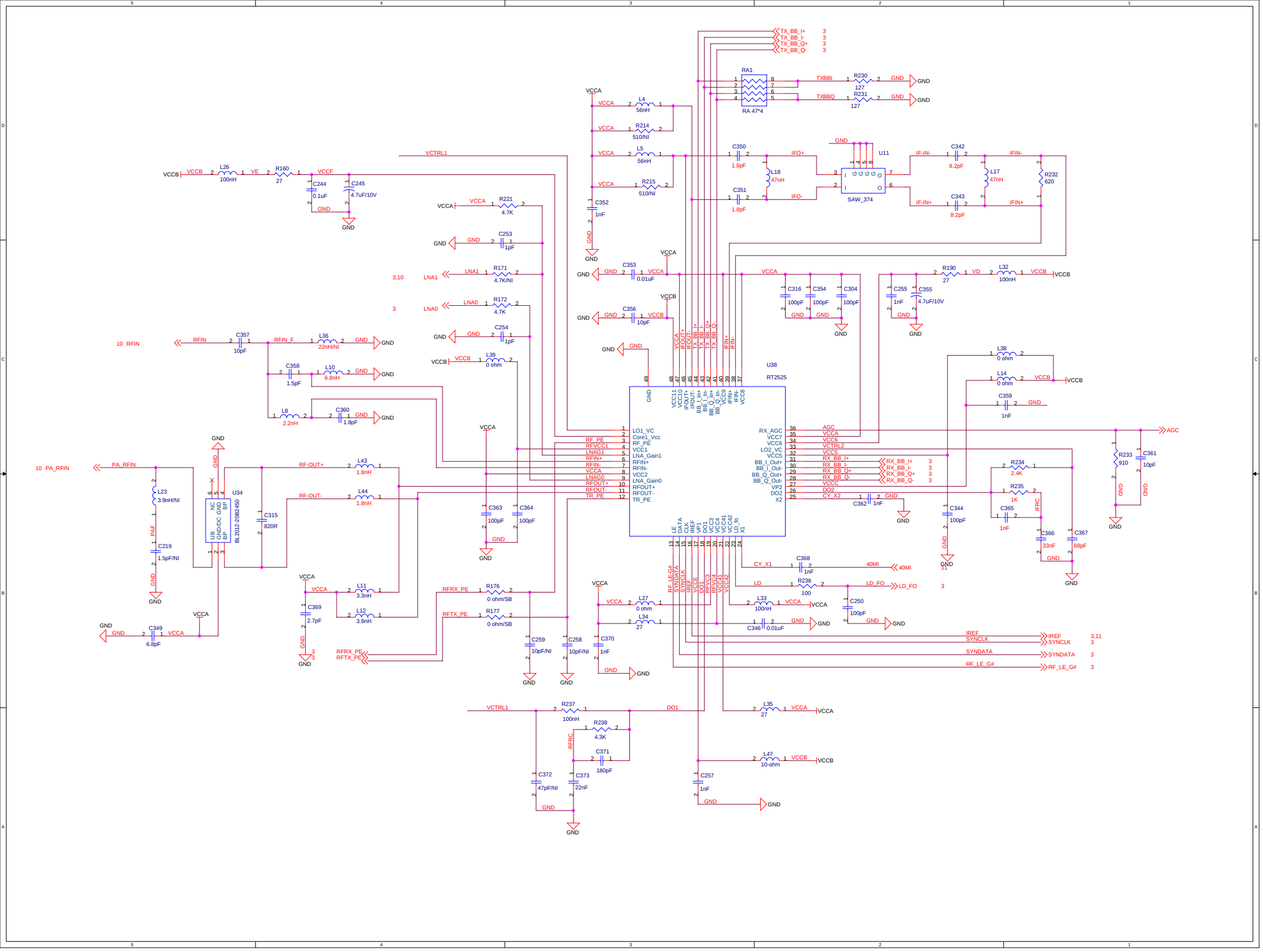
U38
RT2525
U11
SAW_374
RA1
RA 47*4
U34
BL2012-20B2450
TX_BB_I+
TX_BB_I-
TX_BB_Q+
TX_BB_Q-
RX_BB_I+
RX_BB_I-
RX_BB_Q+
RX_BB_Q-
VCCB
VCCA
VCTRL1
AGC
IREF
SYNCLK
SYNDATA
RF_LE_G#
LD_FO
40MI
IF-IN-
IF-IN+
IFIN-
IFIN+
IFO+
IFO-
LNA1
LNA0
RFIN
10 RFIN
10 PA_RFIN
PA_RFIN
RF-OUT+
RF-OUT-
RFRX_PE
RFTX_PE
DO1
GND

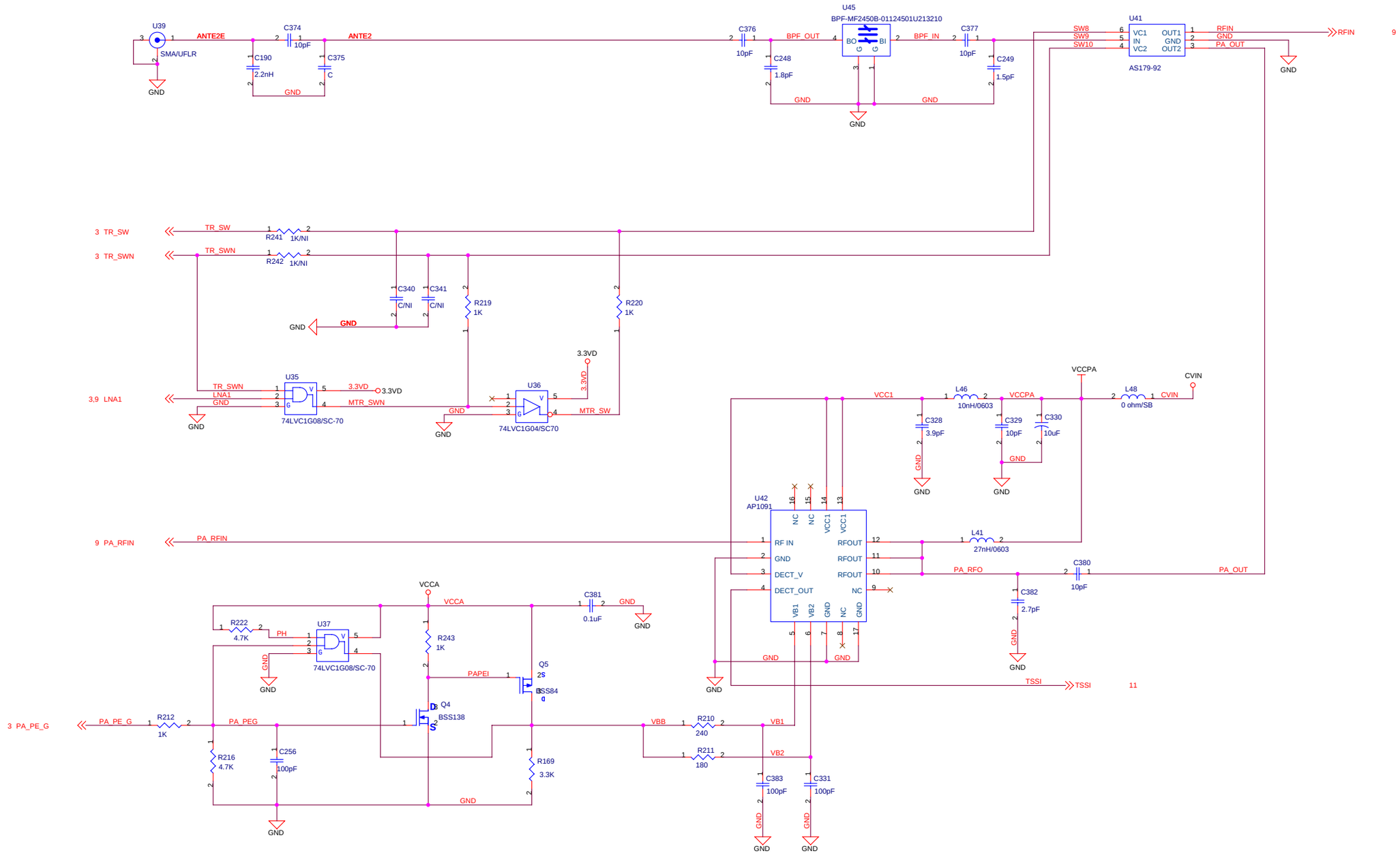
U39
SMA/UFLR
ANTE2E
C374
10pF
ANTE2
C190
2.2nH
C375
C
GND
C376
10pF
BPF_OUT
U45
BPF-MF2450B-01124501U213210
BO
BI
BPF_IN
C377
10pF
C248
1.8pF
C249
1.5pF
U41
VC1
IN
VC2
OUT1
GND
OUT2
AS179-92
SW8
SW9
SW10
RFIN
PA_OUT
9
3 TR_SW
TR_SW
R241
1K/NI
3 TR_SWN
TR_SWN
R242
1K/NI
C340
C/NI
C341
C/NI
R219
1K
R220
1K
3.3VD
U35
74LVC1G08/SC-70
3,9 LNA1
LNA1
MTR_SWN
U36
74LVC1G04/SC70
MTR_SW
VCCPA
CVIN
VCC1
L46
10nH/0603
L48
0 ohm/SB
C328
3.9pF
C329
10pF
C330
10uF
U42
AP1091
NC
RF IN
DECT_V
DECT_OUT
RFOUT
VB1
VB2
9 PA_RFIN
PA_RFIN
L41
27nH/0603
PA_RFO
C380
10pF
C382
2.7pF
TSSI
11
VCCA
C381
0.1uF
R222
4.7K
PH
U37
74LVC1G08/SC-70
R243
1K
Q5
BSS84
PAPEI
Q4
BSS138
3 PA_PE_G
PA_PE_G
R212
1K
PA_PEG
R216
4.7K
C256
100pF
R169
3.3K
VBB
R210
240
R211
180
VB1
VB2
C383
100pF
C331
100pF

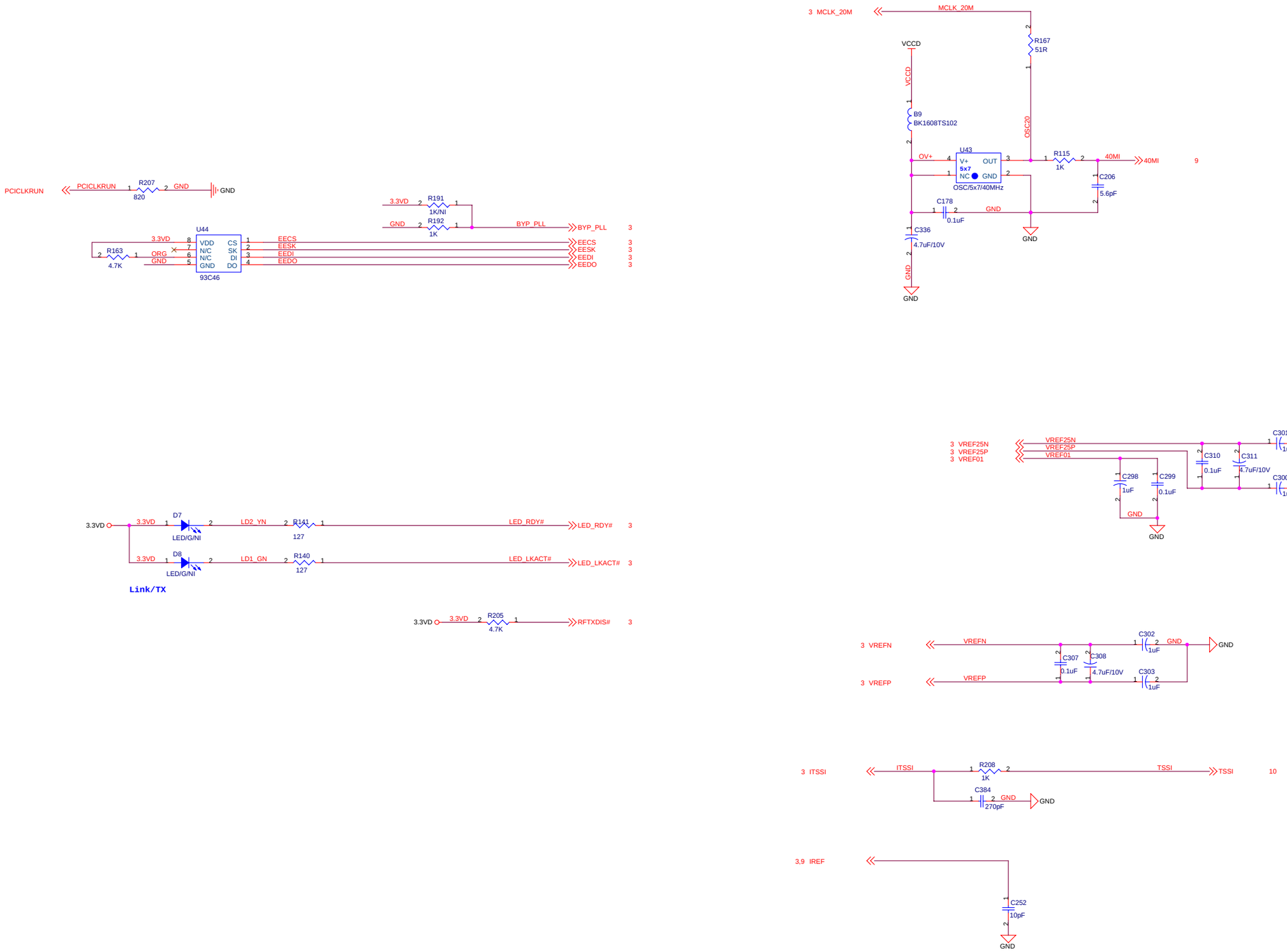
PCICLKRUN
PCICLKRUN
R207
820
GND
GND
3.3VD
R191
1K/NI
GND
R192
1K
BYP_PLL
BYP_PLL
3
U44
3.3VD
R163
4.7K
ORG
GND
VDD
N/C
N/C
GND
CS
SK
DI
DO
93C46
EECS
EESK
EEDI
EEDO
EECS
EESK
EEDI
EEDO
3
3
3
3
3 MCLK_20M
MCLK_20M
R167
51R
VCCD
VCCD
B9
BK1608TS102
OSC20
OV+
U43
V+
OUT
5x7
NC
GND
OSC/5x7/40MHz
R115
1K
40MI
40MI
9
C206
5.6pF
C178
0.1uF
GND
C336
4.7uF/10V
GND
GND
3.3VD
D7
LED/G/NI
LD2_YN
R141
127
LED_RDY#
LED_RDY#
3
3.3VD
D8
LED/G/NI
LD1_GN
R140
127
LED_LKACT#
LED_LKACT#
3
Link/TX
3.3VD
3.3VD
R205
4.7K
RFTXDIS#
3
3 VREF25N
3 VREF25P
3 VREF01
VREF25N
VREF25P
VREF01
C298
1uF
C299
0.1uF
C310
0.1uF
C311
4.7uF/10V
C301
1uF
C300
1uF
GND
GND
GND
3 VREFN
VREFN
C307
0.1uF
C308
4.7uF/10V
C302
1uF
C303
1uF
GND
GND
3 VREFP
VREFP
3 ITSSI
ITSSI
R208
1K
TSSI
TSSI
10
C384
270pF
GND
GND
3,9 IREF
C252
10pF
GND