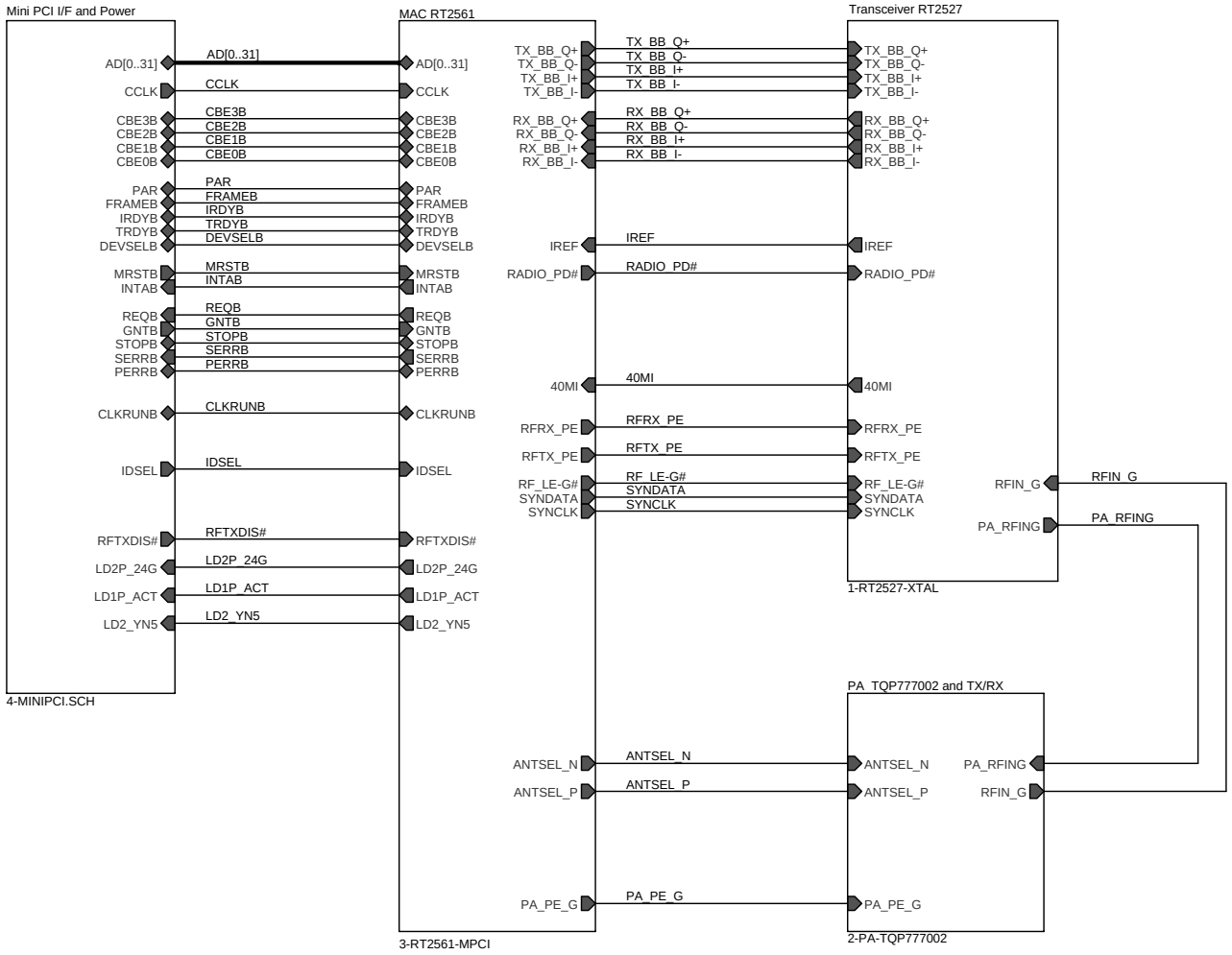
Mini PCI I/F and Power
AD[0..31]
CCLK
CBE3B
CBE2B
CBE1B
CBE0B
PAR
FRAMEB
IRDYB
TRDYB
DEVSELB
MRSTB
INTAB
REQB
GNTB
STOPB
SERRB
PERRB
CLKRUNB
IDSEL
RFTXDIS#
LD2P_24G
LD1P_ACT
LD2_YN5
4-MINIPCI.SCH
MAC RT2561
TX_BB_Q+
TX_BB_Q-
TX_BB_I+
TX_BB_I-
RX_BB_Q+
RX_BB_Q-
RX_BB_I+
RX_BB_I-
IREF
RADIO_PD#
40MI
RFRX_PE
RFTX_PE
RF_LE-G#
SYNDATA
SYNCLK
ANTSEL_N
ANTSEL_P
PA_PE_G
3-RT2561-MPCI
Transceiver RT2527
RFIN_G
PA_RFING
1-RT2527-XTAL
PA_TQP777002 and TX/RX
2-PA-TQP777002

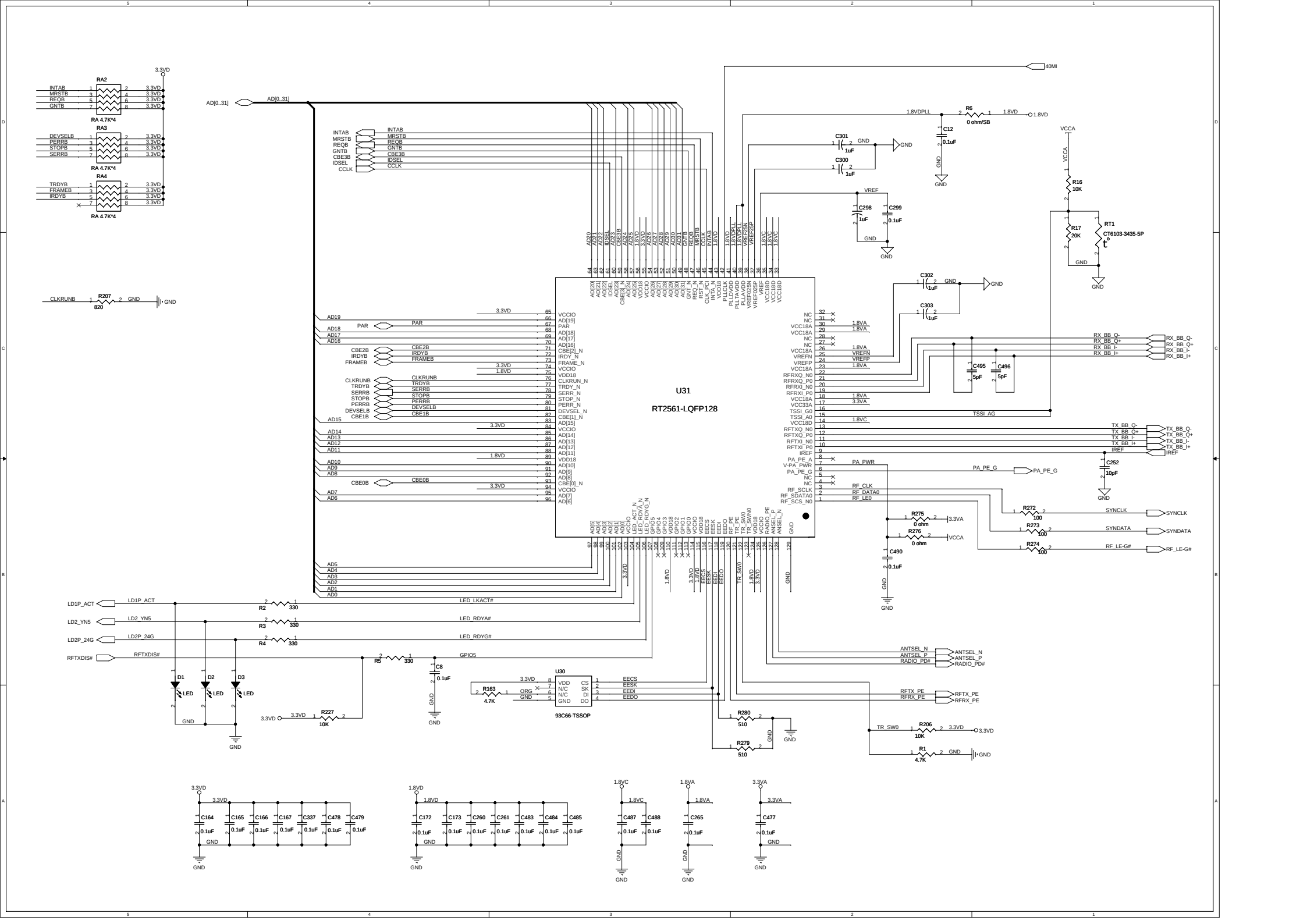
U31
RT2561-LQFP128
U30
93C66-TSSOP
RA2
RA3
RA4
RA 4.7K*4
AD[0..31]
40MI
CLKRUNB
R207
820
LD1P_ACT
LD2_YN5
LD2P_24G
RFTXDIS#
LED_LKACT#
LED_RDYA#
LED_RDYG#
GPIO5
D1
D2
D3
LED
R2
R3
R4
R5
330
R227
10K
C8
0.1uF
R163
4.7K
EECS
EESK
EEDI
EEDO
R280
510
R279
510
TR_SW0
R206
10K
R1
4.7K
RFTX_PE
RFRX_PE
ANTSEL_N
ANTSEL_P
RADIO_PD#
SYNCLK
SYNDATA
RF_LE-G#
R272
R273
R274
100
R275
R276
0 ohm
C490
0.1uF
PA_PE_G
PA_PWR
RF_CLK
RF_DATA0
RF_LE0
TSSI_AG
IREF
C252
10pF
RX_BB_Q-
RX_BB_Q+
RX_BB_I-
RX_BB_I+
TX_BB_Q-
TX_BB_Q+
TX_BB_I-
TX_BB_I+
C495
5pF
C496
5pF
C301
1uF
C300
1uF
C298
1uF
C299
0.1uF
C302
1uF
C303
1uF
R6
0 ohm/SB
C12
0.1uF
R16
10K
R17
20K
RT1
CT6103-3435-5P
VREF
VCCA
1.8VDPLL
1.8VD
3.3VD
3.3VA
1.8VC
1.8VA
GND
C164
C165
C166
C167
C337
C478
C479
C172
C173
C260
C261
C483
C484
C485
C487
C488
C265
C477

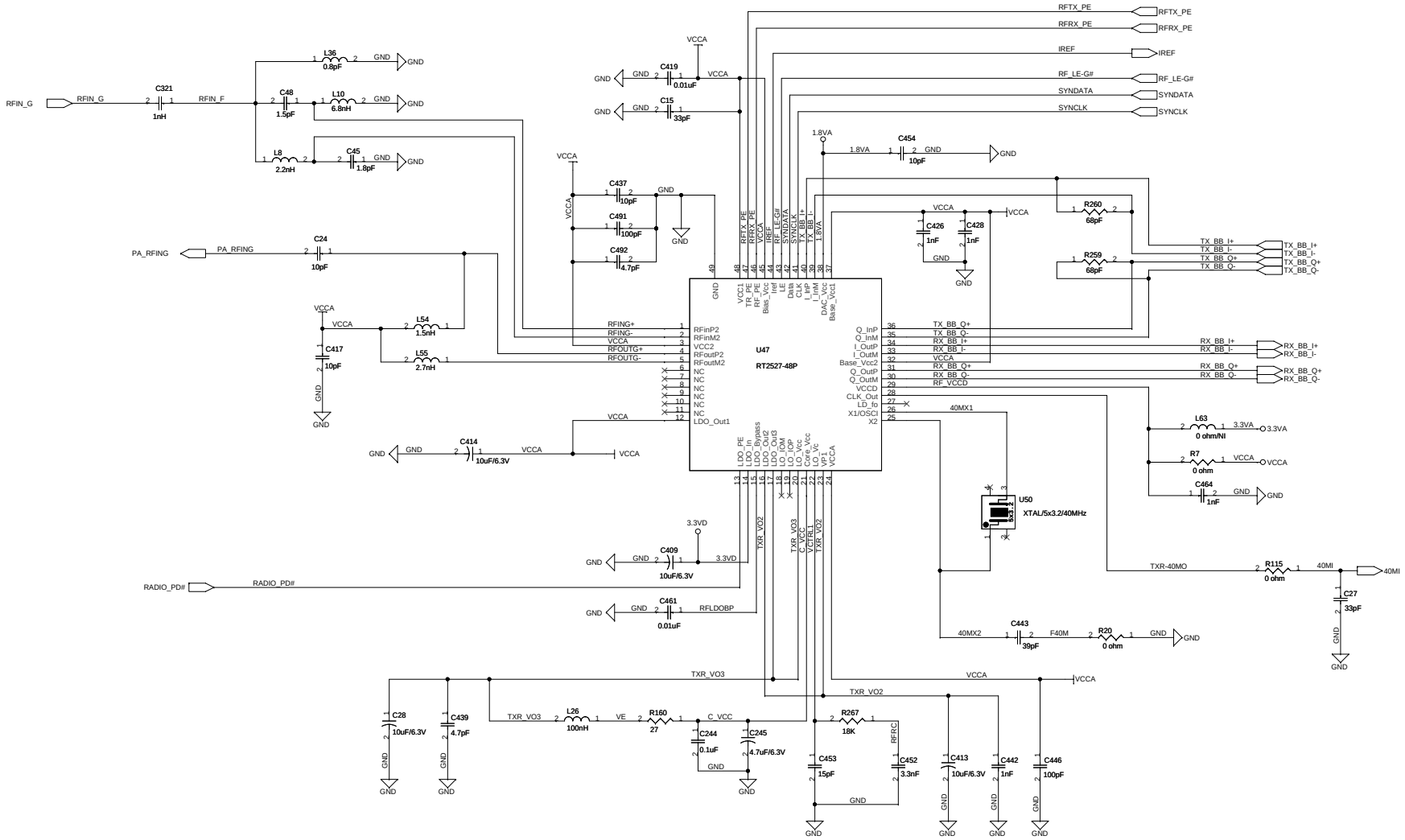
RFIN_G
C321
1nH
RFIN_F
L36
0.8pF
C48
1.5pF
L10
6.8nH
L8
2.2nH
C45
1.8pF
GND
PA_RFING
C24
10pF
VCCA
C437
10pF
C491
100pF
C492
4.7pF
C417
10pF
L54
1.5nH
L55
2.7nH
C414
10uF/6.3V
C419
0.01uF
C15
33pF
C454
10pF
1.8VA
C426
1nF
C428
1nF
R260
68pF
R259
68pF
RFTX_PE
RFRX_PE
IREF
RF_LE-G#
SYNDATA
SYNCLK
TX_BB_I+
TX_BB_I-
TX_BB_Q+
TX_BB_Q-
RX_BB_I+
RX_BB_I-
RX_BB_Q+
RX_BB_Q-
U47
RT2527-48P
RFINP2
RFINM2
VCC2
RFOUTP2
RFOUTM2
LDO_Out1
RFING+
RFING-
RFOUTG+
RFOUTG-
Q_InP
Q_InM
I_OutP
I_OutM
Base_Vcc2
Q_OutP
Q_OutM
VCCD
CLK_Out
LD_fo
X1/OSCI
X2
40MX1
L63
0 ohm/NI
3.3VA
R7
0 ohm
C464
1nF
U50
XTAL/5x3.2/40MHz
TXR-40MO
R115
0 ohm
40MI
C27
33pF
C443
39pF
40MX2
F40M
R20
0 ohm
C409
10uF/6.3V
3.3VD
RADIO_PD#
C461
0.01uF
RFLDOBP
TXR_VO2
TXR_VO3
C28
10uF/6.3V
C439
4.7pF
L26
100nH
VE
R160
27
C_VCC
C244
0.1uF
C245
4.7uF/6.3V
R267
18K
RFRC
C453
15pF
C452
3.3nF
C413
10uF/6.3V
C442
1nF
C446
100pF

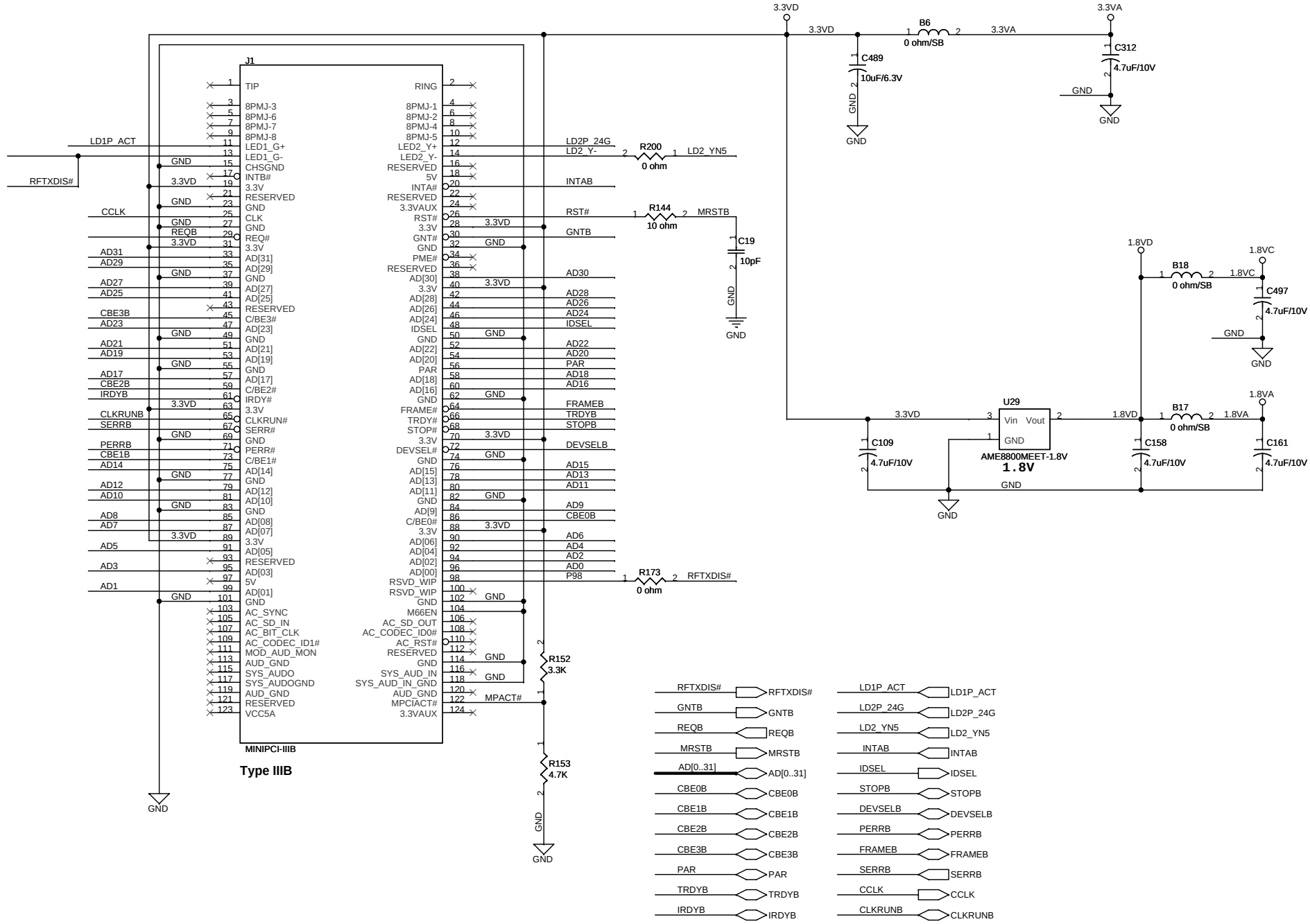
J1
MINIPCI-IIIB
Type IIIB
TIP
RING
8PMJ-3
8PMJ-6
8PMJ-7
8PMJ-8
LED1_G+
LED1_G-
CHSGND
INTB#
3.3V
RESERVED
GND
CLK
REQ#
AD[31]
AD[29]
AD[27]
AD[25]
C/BE3#
AD[23]
AD[21]
AD[19]
AD[17]
C/BE2#
IRDY#
CLKRUN#
SERR#
PERR#
C/BE1#
AD[14]
AD[12]
AD[10]
AD[08]
AD[07]
AD[05]
AD[03]
5V
AD[01]
AC_SYNC
AC_SD_IN
AC_BIT_CLK
AC_CODEC_ID1#
MOD_AUD_MON
AUD_GND
SYS_AUDO
SYS_AUDOGND
AUD_GND
RESERVED
VCC5A
8PMJ-1
8PMJ-2
8PMJ-4
8PMJ-5
LED2_Y+
LED2_Y-
RESERVED
5V
INTA#
RESERVED
3.3VAUX
RST#
GNT#
PME#
AD[30]
AD[28]
AD[26]
AD[24]
IDSEL
AD[22]
AD[20]
PAR
AD[18]
AD[16]
FRAME#
TRDY#
STOP#
DEVSEL#
AD[15]
AD[13]
AD[11]
AD[9]
C/BE0#
AD[06]
AD[04]
AD[02]
AD[00]
RSVD_WIP
RSVD_WIP
M66EN
AC_SD_OUT
AC_CODEC_ID0#
AC_RST#
SYS_AUD_IN
SYS_AUD_IN_GND
AUD_GND
MPCIACT#
3.3VAUX
LD1P_ACT
RFTXDIS#
CCLK
REQB
AD31
AD29
AD27
AD25
CBE3B
AD23
AD21
AD19
AD17
CBE2B
IRDYB
CLKRUNB
SERRB
PERRB
CBE1B
AD14
AD12
AD10
AD8
AD7
AD5
AD3
AD1
LD2P_24G
LD2_Y-
INTAB
RST#
GNTB
AD30
AD28
AD26
AD24
IDSEL
AD22
AD20
PAR
AD18
AD16
FRAMEB
TRDYB
STOPB
DEVSELB
AD15
AD13
AD11
AD9
CBE0B
AD6
AD4
AD2
AD0
P98
MPACT#
R200
0 ohm
LD2_YN5
R144
10 ohm
MRSTB
C19
10pF
R173
0 ohm
RFTXDIS#
R152
3.3K
R153
4.7K
3.3VD
3.3VA
B6
0 ohm/SB
C489
10uF/6.3V
C312
4.7uF/10V
1.8VD
1.8VC
B18
0 ohm/SB
C497
4.7uF/10V
U29
Vin
Vout
GND
AME8800MEET-1.8V
1.8V
B17
0 ohm/SB
1.8VA
C109
4.7uF/10V
C158
4.7uF/10V
C161
4.7uF/10V
GND
RFTXDIS#
GNTB
REQB
MRSTB
AD[0..31]
CBE0B
CBE1B
CBE2B
CBE3B
PAR
TRDYB
IRDYB
LD1P_ACT
LD2P_24G
LD2_YN5
INTAB
IDSEL
STOPB
DEVSELB
PERRB
FRAMEB
SERRB
CCLK
CLKRUNB

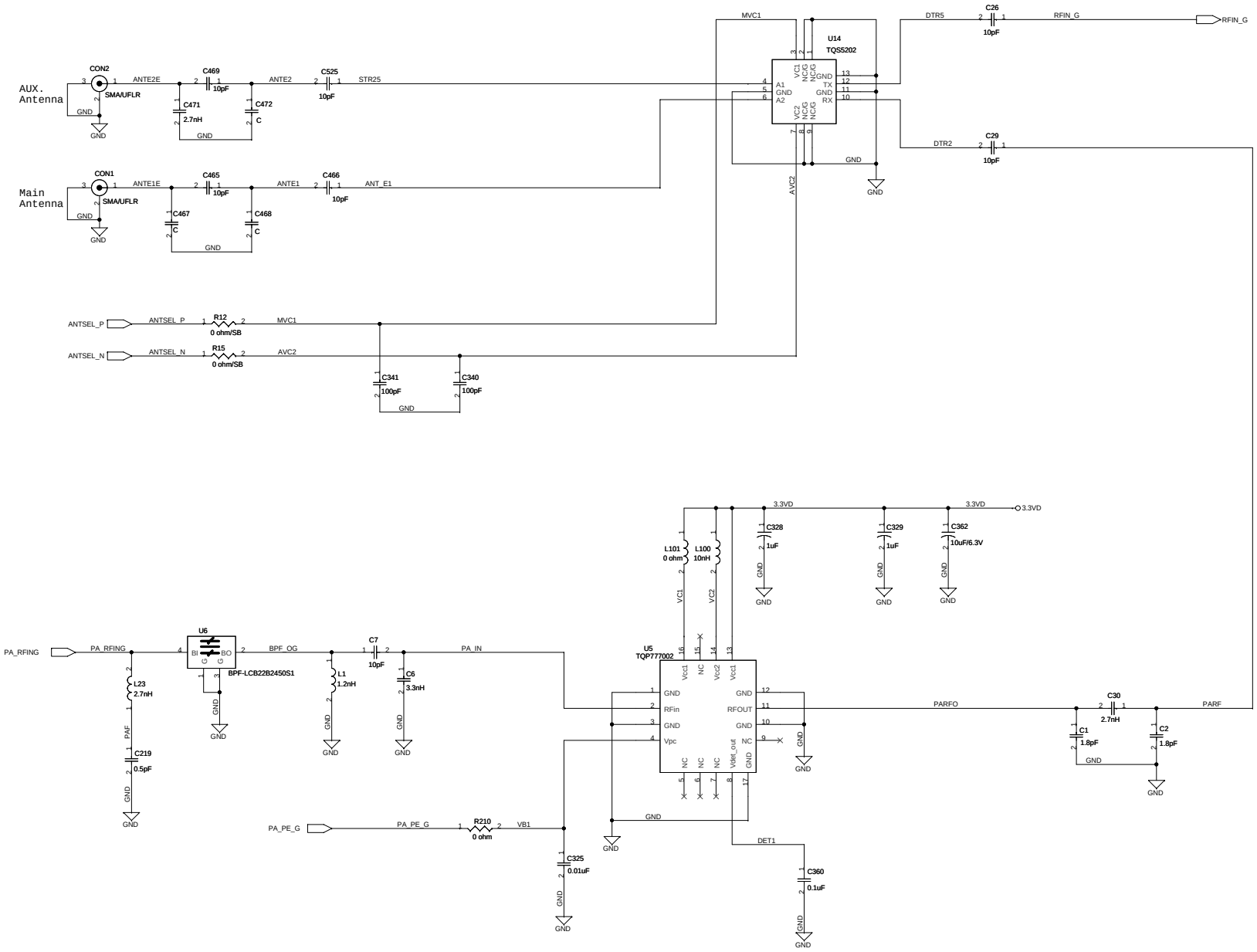
AUX. Antenna
CON2
SMA/UFLR
ANTE2E
C469
10pF
C471
2.7nH
C472
C
ANTE2
C525
10pF
STR25
Main Antenna
CON1
SMA/UFLR
ANTE1E
C465
10pF
C467
C
C468
C
ANTE1
C466
10pF
ANT_E1
GND
MVC1
U14
TQS5202
VC1
NC/G
NC/G
GND
A1
GND
A2
VC2
NC/G
NC/G
TX
GND
RX
DTR5
C26
10pF
RFIN_G
DTR2
C29
10pF
AVC2
ANTSEL_P
R12
0 ohm/SB
ANTSEL_N
R15
0 ohm/SB
C341
100pF
C340
100pF
3.3VD
L101
0 ohm
L100
10nH
C328
1uF
C329
1uF
C362
10uF/6.3V
VC1
VC2
PA_RFING
U6
BI
BO
C7
C8
BPF-LCB22B2450S1
BPF_OG
C7
10pF
PA_IN
L23
2.7nH
PAF
C219
0.5pF
L1
1.2nH
C6
3.3nH
U5
TQP777002
Vcc1
NC
Vcc2
Vcc1
GND
RFin
GND
Vpc
GND
RFOUT
GND
NC
NC
NC
NC
Vdet_out
GND
PARFO
C30
2.7nH
PARF
C1
1.8pF
C2
1.8pF
PA_PE_G
R210
0 ohm
VB1
C325
0.01uF
DET1
C360
0.1uF