FCC ID: KA2DWLG132B1

SAR TEST REPORT

REPORT NO.: SA931027L05A
MODEL NO.: DWL-G132
RECEIVED: Oct. 27, 2004
TESTED: Nov. 01, 2004

APPLICANT : D-Link Corporation

ADDRESS: No.8, Li-Hsin VII Road, Science Based Industrial Park, Hsin-Chu,Taiwan, R.O.C.

ISSUED BY: Advance Data Technology Corporation

LAB ADDRESS: No. 47, 14th Ling, Chia Pau Tsuen, Lin Kou Hsiang 244, Taipei Hsien, Taiwan, R.O.C.

TEST LOCATION: No. 19, Hwa Ya 2nd Rd., Wen Hwa Tsuen, Kwei Shan Hsiang, Taoyuan Hsien 333, Taiwan, R.O.C.

This test report consists of 32 pages in total except Appendix. It may be duplicated completely for legal use with the approval of the applicant. It should not be reproduced except in full, without the written approval of our laboratory. The client should not use it to claim product endorsement by CNLA, A2LA or any government agencies. The test results in the report only apply to the tested sample.

ACCREDITED
No. 2177-01

0528
ILAC MRA

Table of Contents

1. CERTIFICATION 3
2. GENERAL INFORMATION 4
2.1 GENERAL DESCRIPTION OF APPLIED STANDARDS 5
2.2 GENERAL INOFRMATION OF THE SAR SYSTEM 5
2.3 GENERAL DESCRIPTION OF THE SPATIAL PEAK SAR EVALUATION 9
3. DESCRIPTION OF TEST MODES AND CONFIGURATIONS 13
4. DESCRIPTION OF SUPPORT UNITS 14
5. TEST RESULTS 15
5.1 TEST PROCEDURES 15
5.2 MEASURED SAR RESULT 16
5.3 SAR LIMITS 18
5.4 RECIPES FOR TISSUE SIMULATING LIQUIDS 18
5.5 TEST EQUIPMENT FOR TISSUE PROPERTY 20
6. SYSTEM VALIDATION 21
6.1 TEST EQUIPMENT 21
6.2 TEST PROCEDURE 21
6.3 VALIDATION RESULT 24
6.4 SYSTEM VALIDATION UNCERTAINTIES 25
7. MEASUREMENT SAR PROCEDURE UNCERTAINTIES 26
7.1 PROBE CALIBRATION UNCERTAINTY 26
7.2 ISOTROPY UNCERTAINTY 26
7.3 BOUNDARY EFFECT UNCERTAINTY 27
7.4 PROBE LINEARITY UNCERTAINTY 27
7.5 READOUT ELECTRONICS UNCERTAINTY 27
7.6 RESPONSE TIME UNCERTAINTY 28
7.7 INTEGRATION TIME UNCERTAINTY 29
7.8 PROBE POSITIONER MECHANICAL TOLERANCE 29
7.9 PROBE POSITIONING 30
7.10 PHANTOM UNCERTAINTY 30
7.11 DASY4 UNCERTAINTY BUDGET 31
8. INFORMATION ON THE TESTING LABORATORIES 32
APPENDIX A: TEST CONFIGURATIONS AND TEST DATA
APPENDIX B: ADT SAR MEASUREMENT SYSTEM
APPENDIX C: PHOTOGRAPHS OF SYSTEM VALIDATION
APPENDIX D: SYSTEM CERTIFICATE & CALIBRATION

1. CERTIFICATION

PRODUCT :	D-Link AirPlus Xtreme G DWL-G132 Wireless USB Adapter
MODEL NO. :	DWL-G132
BRAND NAME :	D-Link
APPLICANT :	D-Link Corporation
TESTED :	Nov. 01, 2004
TEST SAMPLE :	Engineering Sample
STANDARDS :	FCC Part 2 (Section 2.1093), FCC OET Bulletin 65, Supplement C (01-01), RSS-102

The above equipment has been tested by **Advance Data Technology Corporation**, and found compliance with the requirement of the above standards. The test record, data evaluation & Equipment Under Test (EUT) configurations represented herein are true and accurate accounts of the measurements of the sample's EMC characteristics under the conditions specified in this report.

PREPARED BY : _____ , **DATE:** Nov. 03, 2004
Rennie Wang

TECHNICAL ACCEPTANCE : _____ , **DATE:** Nov. 03, 2004
Responsible for RF
Ansen Lei

APPROVED BY : _____ , **DATE:** Nov. 03, 2004
Cody Chang
Deputy Manager

2. GENERAL INFORMATION

PRODUCT	D-Link AirPlus Xtreme G DWL-G132 Wireless USB Adapter
MODEL NO.	DWL-G132
POWER SUPPLY	5.0Vdc from host equipment
MODULATION TYPE	CCK, DQPSK, DBPSK for DSSS 64QAM, 16QAM, QPSK, BPSK for OFDM
MODULATION TYPE	BPSK, QPSK, CCK, 16QAM, 64QAM
RADIO TECHNOLOGY	DSSS, OFDM
TRANSFER RATE	802.11b: 11/5.5/2/1Mbps 802.11g: 54/48/36/24/18/12/9/6Mbps (Turbo mode: up to 108Mbps *see Note 2)
FREQUENCY RANGE	2412MHz ~ 2462MHz
NUMBER OF CHANNEL	11
MAXIMUN CONDUCTED OUTPUT POWER (FOR CCK)	50.933mW
MAXIMUN CONDUCTED OUTPUT POWER (FOR OFDM)	50.82mW
ANTENNA TYPE	Chip antenna with 2dBi gain
AVERAGE SAR(1g) (FOR CCK)	0.707W/kg
AVERAGE SAR(1g) (FOR OFDM)	0.510W/kg
DATA CABLE	NA
I/O PORTS	USB
ASSOCIATED DEVICES	NA

NOTE:

1. Normal operating condition of the EUT shall be plugged into the laptop PC. Then the property of the EUT shall be complied with the portable device according to the FCC 2.1093.
2. This EUT is capable of providing data rates of up to 108Mbps in Turbo Mode depending upon reception quality.
3. The above EUT information was declared by manufacturer and for more detailed features description, please refer to the manufacturer's specifications or User's Manual.

2.1 GENERAL DESCRIPTION OF APPLIED STANDARDS

According to the specifications of the manufacturer, this product must comply with the requirements of the following standards:

FCC Part 2 (2.1093)
FCC OET Bulletin 65, Supplement C (01- 01)
RSS-102
IEEE 1528-2003

All test items have been performed and recorded as per the above standards.

2.2 GENERAL INOFRMATION OF THE SAR SYSTEM

DASY4 (software 4.3 Build 22) consists of high precision robot, probe alignment sensor, phantom, robot controller, controlled measurement server and near-field probe. The robot includes six axes that can move to the precision position of the DASY4 software defined. The DASY4 software can define the area that is detected by the probe. The robot is connected to controlled box. Controlled measurement server is connected to the controlled robot box. The DAE includes amplifier, signal multiplexing, AD converter, offset measurement and surface detection. It is connected to the Electro-optical coupler (ECO). The ECO performs the conversion form the optical into digital electric signal of the DAE and transfers data to the PC.

ET3DV6 ISOTROPIC E-FIELD PROBE

Construction	Symmetrical design with triangular core. Built-in optical fiber for surface detection system. Built-in shielding against static charges. PEEK enclosure material (resistant to organic solvents, e.g., glycolether).
Calibration	Basic Broad Band Calibration in air: 10-2500 MHz Conversion Factors (CF) for HSL 900, HSL 1800, HSL2450, MSL 900, MSL 1800 and MSL2450. CF-Calibration for other liquids and frequencies upon request
Frequency	10 MHz to 3 GHz; Linearity: ± 0.2 dB (30 MHz to 3 GHz)
Directivity	± 0.2 dB in HSL (rotation around probe axis) ± 0.4 db in HSL (rotation normal to probe axis)
Dynamic Range	5 µW/g to > 100 mW/g; Linearity: ± 0.2 dB
Optical Surface Detection	± 0.2 mm repeatability in air and clear liquids over diffuse reflecting surfaces

Dimensions	Overall length: 330 mm (Tip Length: 16 mm) Tip diameter: 6.8 mm (Body diameter: 12 mm) Distance from probe tip to dipole centers: 2.7 mm
Application	General dosimetric measurements up to 3 GHz Compliance tests of mobile phones Fast automatic scanning in arbitrary phantoms (ET3DV6)
Sensitivity	X axis :1.87 μV ; Y axis : 1.84 μV ; Z axis : 1.64 μV
Diode compression point	X axis : 95 mV ; Y axis : 95 mV ; Z axis : 95mV

Conversion Factor

Frequency range (MHz)	X axis	Y axis	Z axis
800~950 (Head)	6.34	6.34	6.34
800~950 (Body)	6.06	6.06	6.06
1700~1910 (Head)	5.16	5.16	5.16
1700~1910 (Body)	4.54	4.54	4.54
2400~2500 (Head)	4.41	4.41	4.41
2400~2500 (Body)	4.23	4.23	4.23

Boundary effect

Frequency range (MHz)	Alpha	Depth
800~950 (Head)	0.38	2.58
800~950 (Body)	0.52	2.10
1700~1910 (Head)	0.46	2.71
1700~1910 (Body)	0.52	2.88
2400~2500 (Head)	0.90	1.93
2400~2500 (Body)	1.04	1.62

NOTE

1. The Probe parameters have been calibrated by the SPEAG. Please reference “APPENDIX D” for the Calibration Certification Report.
2. For frequencies above 800 MHz, calibration in a rectangular wave-guide is used, because wave-guide size is manageable.
3. For frequencies below 800 MHz, temperature transfer calibration is used because the wave-guide size becomes relatively large.

TWIN SAM V4.0

Construction	The shell corresponds to the specifications of the Specific Anthropomorphic Mannequin (SAM) phantom defined in IEEE 1528-2003, CENELEC 50361 and IEC 62209. It enables the dosimetric evaluation of left and right hand phone usage as well as body mounted usage at the flat phantom region. A cover prevents evaporation of the liquid. Reference markings on the phantom allow the complete setup of all predefined phantom positions and measurement grids by manually teaching three points with the robot.
Shell Thickness	2 ± 0.2 mm
Filling Volume	Approx. 25 liters
Dimensions	Height: 810 mm; Length: 1000 mm; Width: 500 mm

SYSTEM VALIDATION KITS: D900V2 – D2450V2

Construction	Symmetrical dipole with l/4 balun enables measurement of feedpoint impedance with NWA matched for use near flat phantoms filled with brain simulating solutions. Includes distance holder and tripod adaptor
Calibration	Calibrated SAR value for specified position and input power at the flat phantom in brain simulating solutions
Frequency	900, 1800, 1900, 2450 MHz
Return Loss	> 20 dB at specified validation position
Power Capability	> 100 W (f < 1GHz); > 40 W (f > 1GHz)
Options	Dipoles for other frequencies or solutions and other calibration conditions upon request
Dimensions	D900V2: dipole length: 149 mm; overall height: 83.3mm D1800V2: dipole length: 72 mm; overall height: 41.2 mm D1900V2: dipole length: 68 mm; overall height: 39.5 mm D2450V2: dipole length: 51.5 mm; overall height: 30.6 mm

DEVICE HOLDER FOR SAM TWIN PHANTOM

Construction

The device holder for the mobile phone device is designed to cope with different positions given in the standard. It has two scales for the device rotation (with respect to the body axis) and the device inclination (with respect to the line between the ear reference points). The rotation centers for both scales is the ear reference point (ERP). Thus the device needs no repositioning when changing the angles. The holder has been made out of low-loss POM material having the following dielectric parameters: relative permittivity ε =3 and loss tangent δ =0.02. The amount of dielectric material has been reduced in the closest vicinity of the device, since measurements have suggested that the influence of the clamp on the test results could thus be lowered. The device holder for the portable device makes up of the polyethylene foam. The dielectric parameters of material close to the dielectric parameters of the air.

DATA ACQUISITION ELECTRONICS

Construction

The data acquisition electronics (DAE3) consists of a highly sensitive electrometer grade preamplifier with auto-zeroing, a channel and gain-switching multiplex, a fast 16 bit AD converter and a command decoder and control logic unit. Transmission to the measurement server is accomplished through an optical downlink for data and status information as well as an optical uplink for commands and the clock. The mechanical probe is mounting device includes two different sensor systems for frontal and sideways probe contacts. They are used for mechanical surface detection and probe collision detection. The input impedance of the DAE3 box is 200MOhm; the inputs are symmetrical and floating. Common mode rejection is above 80 dB.

2.3 GENERAL DESCRIPTION OF THE SPATIAL PEAK SAR EVALUATION

The DASY4 post-processing software (SEMCAD) automatically executes the following procedures to calculate the field units from the micro-volt readings at the probe connector. The parameters used in the evaluation are stored in the configuration modules of the software:

Probe parameters:	- Sensitivity	$Norm_i$, a_{i0}, a_{i1}, a_{i2}
	- Conversion factor	$ConvF_i$
	- Diode compression point	dcp_i
Device parameters:	- Frequency	F
	- Crest factor	cf
Media parameters:	- Conductivity	σ
	- Density	ρ

The first step of the evaluation is a linearization of the filtered input signal to account for the compression characteristics of the detector diode. The compensation depends on the input signal, the diode type and the DC-transmission factor from the diode to the evaluation electronics. If the exciting field is pulsed, the crest factor of the signal must be known to correctly compensate for peak power. The formula for each channel can be given as:

$$V_i = U_i + U_i^2 \bullet \frac{cf}{dcp_i}$$

V_i	=compensated signal of channel i	(i = x, y, z)
U_i	=input signal of channel I	(i = x, y, z)
cf	=crest factor of exciting field	(DASY parameter)
dcp_i	=diode compression point	(DASY parameter)

From the compensated input signals the primary field data for each channel can be evaluated:

E-fieldprobes : $$E_i = \sqrt{\frac{V_1}{Norm_i \cdot ConvF}}$$

H-fieldprobes : $$H_i = \sqrt{V_i} \cdot \frac{a_{i0} + a_{i1} f + a_{i2} f^2}{f}$$

V_i =compensated signal of channel I (i = x, y, z)
$Norm_i$ =sensor sensitivity of channel i µV/(V/m)2 for E-field Probes (i = x, y, z)
ConvF = sensitivity enhancement in solution
a_{ij} = sensor sensitivity factors for H-field probes
F = carrier frequency [GHz]
E_i = electric field strength of channel i in V/m
H_i = magnetic field strength of channel i in A/m

The RSS value of the field components gives the total field strength (Hermitian magnitude):

$$E_{tot} = \sqrt{E_x^2 + E_y^2 + E_z^2}$$

The primary field data are used to calculate the derived field units.

$$SAR = E_{tot}^2 \cdot \frac{o}{p \cdot 1'000}$$

SAR = local specific absorption rate in mW/g
E_{tot} = total field strength in V/m
o = conductivity in [mho/m] or [Siemens/m]
p = equivalent tissue density in g/cm3

Note that the density is set to 1, to account for actual head tissue density rather than the density of the tissue simulating liquid. The entire evaluation of the spatial peak values is performed within the Post-processing engine (SEMCAD). The system always gives the maximum values for the 1 g and 10 g cubes. The algorithm to find the cube with highest averaged SAR is divided into the following stages:

1. The extraction of the measured data (grid and values) from the Zoom Scan
2. The calculation of the SAR value at every measurement point based on all stored data (A/D values and measurement parameters)
3. The generation of a high-resolution mesh within the measured volume
4. The interpolation of all measured values from the measurement grid to the high-resolution grid
5. The extrapolation of the entire 3-D field distribution to the phantom surface over the distance from sensor to surface
6. The calculation of the averaged SAR within masses of 1g and 10g.

The probe is calibrated at the center of the dipole sensors that is located 1 to 2.7mm away from the probe tip. During measurements, the probe stops shortly above the phantom surface, depending on the probe and the surface detecting system. Both distances are included as parameters in the probe configuration file. The software always knows exactly how far away the measured point is from the surface. As the probe cannot directly measure at the surface, the values between the deepest measured point and the surface must be extrapolated. The angle between the probe axis and the surface normal line is less than 30 degree.

In the Area Scan, the gradient of the interpolation function is evaluated to find all the extreme of the SAR distribution. The uncertainty on the locations of the extreme is less than 1/20 of the grid size. Only local maximum within –2 dB of the global maximum are searched and passed for the Cube Scan measurement. In the Cube Scan, the interpolation function is used to extrapolate the Peak SAR from the lowest measurement points to the inner phantom surface (the extrapolation distance). The uncertainty increases with the extrapolation distance. To keep the uncertainty within 1% for the 1 g and 10 g cubes, the extrapolation distance should not be larger than 5mm.

The maximum search is automatically performed after each area scan measurement. It is based on splines in two or three dimensions. The procedure can find the maximum for most SAR distributions even with relatively large grid spacing. After the area scanning measurement, the probe is automatically moved to a position at the interpolated maximum. The following scan can directly use this position for reference, e.g., for a finer resolution grid or the cube evaluations. The 1g and 10g peak evaluations are only available for the predefined cube 7x7x7 scans. The routines are verified and optimized for the grid dimensions used in these cube measurements. The measured volume of 30x30x30mm contains about 30g of tissue. The first procedure is an extrapolation (incl. Boundary correction) to get the points between the lowest measured plane and the surface. The next step uses 3D interpolation to get all points within the measured volume in a 1mm grid (42875 points). In the last step, a 1g cube is placed numerically into the volume and its averaged SAR is calculated. This cube is the moved around until the highest averaged SAR is found. If the highest SAR is found at the edge of the measured volume, the system will issue a warning: higher SAR values might be found outside of the measured volume. In that case the cube measurement can be repeated, using the new interpolated maximum as the center.

3. DESCRIPTION OF TEST MODES AND CONFIGURATIONS

CARRIER MODULATION UNDER TEST	CCK, OFDM
CREST FACTOR	1.0
CHANNEL FREQUENCIES UNDER TEST AND ITS CONDUCTED OUTPUT POWER	50.93mW / Ch1: 2412MHz For CCK 50.47mW / Ch6: 2437MHz For CCK 50.47mW / Ch11: 2462MHz For CCK 50.70mW / Ch1: 2412MHz For OFDM 50.82mW / Ch6: 2437MHz For OFDM 40.37mW / Ch11: 2462MHz For OFDM
ANTENNA CONFIGURATION	Chip antenna with 2dBi gain
ANTENNA POSTITON	Inside the front cover, near the top
EUT POWER SOURCE	From Host Notebook
HOST POWER SOURCE	Fully Charged Battery

The following test configurations have been applied in this test report:

Mode 1: The EUT is plugged in the USB slot of the notebook, the bottom of the notebook contact the bottom of the flat phantom with 0mm separation distance. Therefore the bottom of the EUT contacts to the phantom and the separation distance is 6mm. The area scan size is 5 x 8 points. (for CCK modulation)

Mode 2: The EUT is plugged in the USB slot of the notebook, the keyboard face of the notebook is perpendicular to the bottom of the flat phantom and the EUT is located between notebook and phantom. The separation distance is 0mm between the tip of the EUT and the bottom of the flat phantom. The area scan size is 5 x 5 points. (for CCK modulation)

Mode 3: The EUT is plugged in the USB slot of the notebook, the bottom of the notebook contact the bottom of the flat phantom with 0mm separation distance. Therefore the bottom of the EUT contacts to the phantom and the separation distance is 6mm. The area scan size is 5 x 8 points. (for OFDM modulation)

Mode 4: The EUT is plugged in the USB slot of the notebook, the keyboard face of the notebook is perpendicular to the bottom of the flat phantom and the EUT is located between notebook and phantom. The separation distance is 0mm between the tip of the EUT and the bottom of the flat phantom. The area scan size is 5 x 5 points. (for OFDM modulation)

NOTE:

1. Please reference “APPENDIX A” for the photos of test configuration.
2. All test modes have been complied with the body worn configuration.
3. The notebook has been installed the controlling software (provided by manufacturer) that could control the EUT transmitted channel and power. But that software is just for test software, not for normal user.
4. Test for both CCK and OFDM modulation.

4. DESCRIPTION OF SUPPORT UNITS

The EUT has been tested as an independent unit together with other necessary accessories or support units. The following support units or accessories were used to form a representative test configuration during the tests.

NO.	PRODUCT	BRAND	MODEL NO.	SERIAL NO.	FCC ID
1	NOTEBOOK	Compaq	N800C	470048-515	FCC DoC Approved

NO.	SIGNAL CABLE DESCRIPTION OF THE ABOVE SUPPORT UNITS
1	NA

5. TEST RESULTS

5.1 TEST PROCEDURES

The EUT (D-Link AirPlus Xtreme G DWL-G132 Wireless USB Adapter) plugged into the notebook. Use the software to control the EUT channel and transmission power. Then record the conducted power before the testing. Place the EUT to the specific test location. After the testing, must writing down the conducted power of the EUT into the report. The SAR value was calculated via the 3D spline interpolation algorithm that has been implemented in the software of DASY4 SAR measurement system manufactured and calibrated by SPEAG. According to the IEEE P1528 draft standards, the recommended procedure for assessing the peak spatial-average SAR value consists of the following steps:

- Power reference measurement
- Area scan
- Zoom scan
- Power reference measurement

The area scan with 15mm x 15mm grid was performed for the highest spatial SAR location. Consist of 5 x 8 points while the scan size is the 60mm x 105mm. The zoon scan with 30mm x 30mm x 30mm volume was performed for SAR value averaged over 1g and 10g spatial volumes.

In the zoon scan, the distance between the measurement point at the probe sensor location (geometric center behind the probe tip) and the phantom surface is 4.0 mm and maintained at a constant distance of ±1.0 mm during a zoon scan to determine peak SAR locations. The distance is 4mm between the first measurement point and the bottom surface of the phantom. The secondary measurement point to the bottom surface of the phantom is with 9mm separation distance. The cube size is 7 x 7 x 7points consist of 343 points and the grid space is 5mm.

The measurement time is 0.5 s at each point of the zoon scan. The probe boundary effect compensation shall be applied during the SAR test. Because of the tip of the probe to the Phantom surface separated distances are longer than half a tip probe diameter.

In the area scan, the separation distance is 4mm between the each measurement point and the phantom surface. The scan size shall be included the transmission portion of the EUT. The measurement time is the same as the zoon scan. At last the reference power drift shall be less than ±5%.

5.2 MEASURED SAR RESULT

EUT	D-Link AirPlus Xtreme G DWL-G132 Wireless USB Adapter	MODEL	DWL-G132
ENVIRONMENTAL CONDITION	Air Temperature：22.0°C, Liquid Temperature：21.0°C Humidity：62%RH		
TESTED BY	Johan Kuo		

Chan.	Freq. (MHz)	Modulate type	Conducted Power (mW)		Power Drift (%)	Device Use Power	Device Test Position Mode	Antenna Position	Measured 1g SAR (W/kg)
			Begin Test	After Test					
1	2412 (Low)	CCK	50.933	50.802	-0.26	Standard Battery from host	1	Internal Fixed	0.643
6	2437 (Mid.)	CCK	50.466	50.171	-0.58	Standard Battery from host	1	Internal Fixed	0.582
11	2462 (High)	CCK	50.466	50.020	-0.88	Standard Battery from host	1	Internal Fixed	**0.707**
1	2412 (Low)	CCK	50.933	50.917	-0.03	Standard Battery from host	2	Internal Fixed	0.453
6	2437 (Mid.)	CCK	50.466	48.697	-3.51	Standard Battery from host	2	Internal Fixed	0.457
11	2462 (High)	CCK	50.466	48.250	-4.39	Standard Battery from host	2	Internal Fixed	0.674

NOTE:
1. Test configuration of each mode is described in section 3.
2. In this testing, the limit for General Population Spatial Peak averaged over 1g, **1.6 W/kg**, is applied.
3. Please see the Appendix A for the photo of the test configuration and also the data.
4. The variation of the EUT conducted power measured before and after SAR testing should not over 5%

EUT	D-Link AirPlus Xtreme G DWL-G132 Wireless USB Adapter	MODEL	DWL-G132
ENVIRONMENTAL CONDITION	Air Temperature：22.0°C, Liquid Temperature：21.0°C Humidity：62%RH		
TESTED BY	Johan Kuo		

Chan.	Freq. (MHz)	Modulate type	Conducted Power (mW)		Power Drift (%)	Device Use Power	Device Test Position Mode	Antenna Position	Measured 1g SAR (W/kg)
			Begin Test	After Test					
1	2412 (Low)	OFDM	50.699	49.102	-3.15	Standard Battery from host	3	Internal Fixed	0.438
6	2437 (Mid.)	OFDM	50.816	48.775	-4.02	Standard Battery from host	3	Internal Fixed	**0.510**
11	2462 (High)	OFDM	40.365	38.548	-4.50	Standard Battery from host	3	Internal Fixed	0.285
1	2412 (Low)	OFDM	50.699	48.876	-3.60	Standard Battery from host	4	Internal Fixed	0.287
6	2437 (Mid.)	OFDM	50.816	48.933	-3.71	Standard Battery from host	4	Internal Fixed	0.350
11	2462 (High)	OFDM	40.365	38.940	-3.53	Standard Battery from host	4	Internal Fixed	0.265

NOTE:
5. Test configuration of each mode is described in section 3.
6. In this testing, the limit for General Population Spatial Peak averaged over 1g, **1.6 W/kg**, is applied.
7. Please see the Appendix A for the photo of the test configuration and also the data.
8. The variation of the EUT conducted power measured before and after SAR testing should not over 5%

5.3 SAR LIMITS

HUMAN EXPOSURE	SAR (W/kg)	
	(General Population / Uncontrolled Exposure Environment)	(Occupational / controlled Exposure Environment)
Spatial Average (whole body)	0.08	0.4
Spatial Peak (averaged over 1 g)	**1.6**	8.0
Spatial Peak (hands/wrists/feet/ankles averaged over 10 g)	4.0	20.0

NOTE

1. This limits accord to ANSI/IEEE C95.1 1992 – Safety Limit.
2. The EUT property been complied with the partial body exposure limit under the general population environment.

5.4 RECIPES FOR TISSUE SIMULATING LIQUIDS

For the measurement of the field distribution inside the SAM phantom, the phantom must be filled with 25 litters of tissue simulation liquid.

The following ingredients are used：

- Water- Deionized water (pure H20), resistivity _16 M - as basis for the liquid
- Sugar- Refined sugar in crystals, as available in food shops - to reduce relative permittivity
- Salt- Pure NaCl - to increase conductivity
- Cellulose- Hydroxyethyl-cellulose, medium viscosity (75-125 mPa.s, 2% in water, 20_C),CAS # 54290 - to increase viscosity and to keep sugar in solution
- Preservative- Preventol D-7 Bayer AG, D-51368 Leverkusen, CAS # 55965-84-9 - to prevent the spread of bacteria and molds
- DGMBE- Diethylenglycol-monobuthyl ether (DGMBE), Fluka Chemie GmbH, CAS # 112-34-5 - to reduce relative permittivity

The Recipes For 2450MHz Simulating Liquid Table

Ingredient	Head Simulating Liquid 2450MHz(HSL-2450)	Muscle Simulating Liquid 2450MHz(MSL-2450)
Water	45%	69.83%
DGMBE	55%	30.17%
Salt	NA	NA
Dielectric Parameters at 22℃	f=2450MHz ε=39.2±5% σ= 1.80±5% S/m	f=2450MHz ε=52.7±5% σ= 1.95±5% S/m

The liquid nature is tested by Agilent Network Analyzer E8358A and Agilent Dielectric Probe Kit 85070D.Here are the procedure.

1. Turn Network Analyzer on and allow at least 30 min. warm up.
2. Mount dielectric probe kit so that interconnecting cable to Network Analyzer will not be moved during measurements or calibration.
3. Pour de-ionized water and measure water temperature (±1°).
4. Set water temperature in Agilent-Software (Calibration Setup).
5. Perform calibration.
6. Validate calibration with dielectric material of known properties (e.g. polished ceramic slab with >8mm thickness ε'=10.0, ε''=0.0). If measured parameters do not fit within tolerance, repeat calibration (±0.2 for ε': ±0.1 for ε'').
7. Conductivity can be calculated from ε'' by $\sigma = \omega\ \varepsilon_0\ \varepsilon'' = \varepsilon''\ f$ [GHz] / 18.
8. Measure liquid shortly after calibration. Repeat calibration every hour.
9. Stir the liquid to be measured. Take a sample (~50ml) with a syringe from the center of the liquid container.
10. Pour the liquid into a small glass flask. Hold the syringe at the bottom of the flask to avoid air bubbles.
11. Put the dielectric probe in the glass flask. Check that there are no air bubbles in front of the opening in the dielectric probe kit.
12. Perform measurements.
13. Adjust medium parameters in DASY4 for the frequencies necessary for the measurements (‘Setup Config’, select medium (e.g. Brain 900 MHz) and press ‘Option’-button.
14. Select the current medium for the frequency of the validation (e.g. Setup Medium Brain 900 MHz).

Simulating Liquid

Liquid Type		HSL-2450		MSL-2450	
Simulating Liquid Temp.		21		21	
Test Date		2004 / 11 / 01		2004 / 11 / 01	
Tested By		Johan Kuo		Johan Kuo	
Freq. (MHz)	Liquid Parameter	Standard Value	Measurement Value	Standard Value	Measurement Value
2412	Permitivity (ε)	NA	NA	52.7507	52.5740
2437		NA	NA	52.7173	52.6321
2450		NA	NA	52.7000	52.7281
2462		NA	NA	52.6847	52.7879
2412	Conductivity (σ) S/m	NA	NA	1.9137	1.9458
2437		NA	NA	1.9376	1.9861
2450		NA	NA	1.9500	2.0048
2462		NA	NA	1.9670	2.0210
Dielectric Parameters Required at 22℃					

5.5 TEST EQUIPMENT FOR TISSUE PROPERTY

Item	Name	Band	Type	Series No.	Calibrated Until
1	Network Analyzer	Agilent	E8358A	US41480538	Mar. 24, 2005
2	Dielectric Probe	Agilent	85070D	US01440176	NA

NOTE:

1. Before starting, all test equipment shall be warmed up for 30min.
2. The tolerance (k=1) specified by Agilent for general dielectric measurements, deriving from inaccuracies in the calibration data, analyzer drift, and random errors, are usually ±2.5% and ±5% for measured permittivity and conductivity, respectively. However, the tolerances for the conductivity is smaller for material with large loss tangents, i.e., less than ±2.5% (k=1) . It can be substantially smaller if more accurate methods are applied.

6. SYSTEM VALIDATION

The system validation was performed in the flat phantom with equipment listed in the following table. Since the SAR value is calculated from the measured electric field, dielectric constant and conductivity of the body tissue, and the SAR is proportional to the square of the electric field. So, the SAR value will be also proportional to the RF power input to the system validation dipole under the same test environment. In our system validation test, 250mW RF input power was used.

6.1 TEST EQUIPMENT

Item	Name	Band	Type	Series No.	Calibrated Until
1	SAM Phantom	S & P	QD000 P40 CA	PT-1150	NA
2	Signal Generator	R & S	SMP04	10001	May 05, 2005
3	E-Field Probe	S & P	ET3DV6	1687	Aug. 25, 2005
4	DAE	S & P	DAE3 V1	510	Aug. 16, 2005
5	Robot Positioner	Staubli Unimation	NA	NA	NA
6	Validation Dipole	S & P	D2450V2	716	Aug. 22, 2005

NOTE: Before starting the measurement, all test equipment shall be warmed up for 30min.

6.2 TEST PROCEDURE

Before the system performance check, we need only to tell the system which components (probe, medium, and device) are used for the system performance check; the system will take care of all parameters. The dipole must be placed beneath the flat section of the SAM Twin Phantom with the correct distance holder in place. The distance holder should touch the phantom surface with a light pressure at the reference marking (little cross) and be oriented parallel to the long side of the phantom. Accurate positioning is not necessary, since the system will search for the peak SAR location, except that the dipole arms should be parallel to the surface. The device holder for mobile phones can be left in place but should be rotated away from the dipole.

1. The ”Power Reference Measurement” and ”Power Drift Measurement” jobs are located at the beginning and end of the batch process. They measure the field drift at one single point in the liquid over the complete procedure. The indicated drift is mainly the variation of the amplifier output power. If it is too high (above ±0.1 dB), the system performance check should be repeated; some amplifiers have very high drift during warm-up. A stable amplifier gives drift results in the DASY system below ±0.02 dB.

2. The ”Surface Check” job tests the optical surface detection system of the DASY system by repeatedly detecting the surface with the optical and mechanical surface detector and comparing the results. The output gives the detecting heights of both systems, the difference between the two systems and the standard deviation of the detection repeatability. Air bubbles or refraction in the liquid due to separation of the sugar-water mixture gives poor repeatability (above ±0.1mm). In that case it is better to abort the system performance check and stir the liquid. The difference between the optical surface detection and the actual surface depends on the probe and is specified with each probe. (It does not depend on the surface reflectivity or the probe angle to the surface within ±30°.) However, varying breaking indices of different liquid compositions might also influence the distance. If the indicated difference varies from the actual setting, the probe parameter ”optical surface

3. The ”Area Scan” job measures the SAR above the dipole on a plane parallel to the surface. It is used to locate the approximate location of the peak SAR. The proposed scan uses large grid spacing for faster measurement; due to the symmetric field, the peak detection is reliable. If a finer graphic is desired, the grid spacing can be reduced. Grid spacing and orientation have no influence on the SAR result.

4. The ”Zoom Scan” job measures the field in a volume around the peak SAR value assessed in the previous ”Area Scan” job (for more information see the application note on SAR evaluation).

About the validation dipole positioning uncertainty, the constant and low loss dielectric spacer is used to establish the correct distance between the top surface of the dipole and the bottom surface of the phantom, the error component introduced by the uncertainty of the distance between the liquid (i.e., phantom shell) and the validation dipole in the DASY4 system is less than ±0.1mm.

$$SAR_{tolerance}[\%] = 100 \times (\frac{(a+d)^2}{a^2} - 1)$$

As the closest distance is 10mm, the resulting tolerance $SAR_{tolerance}$[%] is <2%.

6.3 VALIDATION RESULT

ENVIRONMENTAL CONDITION	Temperature：22.0°C, Humidity：62%RH
TESTED BY	Johan Kuo
TEST DATE	2004/11/01

2450MHz System Validation Test in the Muscle Simulating Liquid				
Test Frequency (MHz)	**Required SAR (mW/g)**	**Measured SAR (mW/g)**	**Deviation (%)**	**Separation Distance**
MSL2450	12.2 (1g)	11.70	-4.10	10mm
MSL2450	5.64 (10g)	5.62	-0.35	10mm

NOTE: Please see Appendix for the photo of system validation test.

6.4 SYSTEM VALIDATION UNCERTAINTIES

In the table below, the system validation uncertainty with respect to the analytically assessed SAR value of a dipole source as given in the P1528 standard is given. This uncertainty is smaller than the expected uncertainty for mobile phone measurements due to the simplified setup and the symmetric field distribution.

Error Description	Tolerance (±%)	Probability Distribution	Divisor	(C_i)		Standard Uncertainty (±%)		(v_i)
				(1g)	(10g)	(1g)	(10g)	
Measurement System								
Probe Calibration	4.8	Normal	1	1	1	4.8	4.8	∞
Axial Isotropy	4.7	Rectangular	$\sqrt{3}$	1	1	2.7	2.7	∞
Hemispherical Isotropy	0	Rectangular	$\sqrt{3}$	1	1	0	0	∞
Boundary effect	1.0	Rectangular	$\sqrt{3}$	1	1	0.6	0.6	∞
Linearity	4.7	Rectangular	$\sqrt{3}$	1	1	2.7	2.7	∞
System Detection Limit	1.0	Rectangular	$\sqrt{3}$	1	1	0.6	0.6	∞
Readout Electronics	1.0	Normal	1	1	1	1.0	1.0	∞
Response Time	0	Rectangular	$\sqrt{3}$	1	1	0	0	∞
Integration Time	0	Rectangular	$\sqrt{3}$	1	1	0	0	∞
RF Ambient Conditions	3.0	Rectangular	$\sqrt{3}$	1	1	1.7	1.7	∞
Probe Positioner	0.4	Rectangular	$\sqrt{3}$	1	1	0.2	0.2	∞
Probe positioning	2.9	Rectangular	$\sqrt{3}$	1	1	1.7	1.7	∞
Algorithms for Max. SAR Evaluation	1.0	Rectangular	$\sqrt{3}$	1	1	0.6	0.6	∞
Dipole								
Dipole Axis to Liquid Distance	2.0	Rectangular	$\sqrt{3}$	1	1	1.2	1.2	∞
Input power and SAR drift measurement	4.7	Rectangular	$\sqrt{3}$	1	1	2.7	2.7	∞
Phantom and Tissue Parameters								
Phantom Uncertainty	4.0	Rectangular	$\sqrt{3}$	1	1	2.3	2.3	∞
Liquid Conductivity (target)	5.0	Rectangular	$\sqrt{3}$	0.64	0.43	1.8	1.2	∞
Liquid Conductivity (measurement)	2.5	Normal	1	0.64	0.43	1.6	1.1	∞
Liquid Permittivity (target)	5.0	Rectangular	$\sqrt{3}$	0.6	0.49	1.7	1.4	∞
Liquid Permittivity (measurement)	2.5	Normal	1	0.6	0.49	1.5	1.2	∞
Combined Standard Uncertainty						8.4	8.1	∞
Coverage Factor for 95%						kp=2		
Expanded Uncertainty (K=2)						16.8	16.2	

NOTE: About the system validation uncertainty assessment, please reference the section 7.

7. MEASUREMENT SAR PROCEDURE UNCERTAINTIES

The assessment of spatial peak SAR of the hand handheld devices is according to IEEE 1528. All testing situation shall be met below these requirement.

- The system is used by an experienced engineer who follows the manual and the guidelines taught during the training provided by SPEAG.
- The probe has been calibrated within the requested period and the stated uncertainty for the relevant frequency bands does not exceed 4.8% (k=1).
- The validation dipole has been calibrated within the requested period and the system performance check has been successful.
- The DAE unit has been calibrated within the within the requested period.
- The minimum distance between the probe sensor and inner phantom shell is selected to be between 4 and 5mm.
- The operational mode of the DUT is CW, CDMA, FDMA or TDMA (GSM, DCS, PCS, IS136 and PDC) and the measurement/integration time per point is >500 ms.
- The dielectric parameters of the liquid have been assessed using Agilent 85070D dielectric probe kit or a more accurate method.
- The dielectric parameters are within 5% of the target values.
- The DUT has been positioned as described in section 3.

7.1 PROBE CALIBRATION UNCERTAINTY

SPEAG conducts the probe calibration in compliance with international and national standards (e.g. IEEE 1528, EN50361, IEC 62209, etc.) under ISO17025. The uncertainties are stated on the calibration certificate. For the most relevant frequency bands, these values do not exceed 4.8% (k=1). If evaluations of other bands are performed for which the uncertainty exceeds these values, the uncertainty tables given in the summary have to be revised accordingly.

7.2 ISOTROPY UNCERTAINTY

The axial isotropy tolerance accounts for probe rotation around its axis while the hemispherical isotropy error includes all probe orientations and field polarizations. These parameters are assessed by SPEAG during initial calibration. In 2001, SPEAG further tightened its quality controls and warrants that the maximal deviation from axial isotropy is ±0.20 dB, while the maximum deviation of hemispherical isotropy is ±0.40 dB, corresponding to ±4.7% and ±9.6%, respectively. A weighting factor of cp equal to 0.5 can be applied, since the axis of the probe deviates less than 30 degrees from the normal surface orientation.

7.3 BOUNDARY EFFECT UNCERTAINTY

The effect can be estimated according to the following error approximation formula

$$SAR_{tolerance}[\%] = SAR_{be}[\%] \times \frac{(d_{be} + d_{step})^2}{2d_{step}} \frac{e^{-\frac{d_{be}}{\delta/2}}}{\delta/2}$$

$$d_{be} + d_{step} < 10mm$$

The parameter d_{be} is the distance in mm between the surface and the closest measurement point used in the averaging process; d_{step} is the separation distance in mm between the first and second measurement points; δ is the minimum penetration depth in mm within the head tissue equivalent liquids (i.e., δ= 13.95 mm at 3GHz); SAR_{be} is the deviation between the measured SAR value at the distance d_{be} from the boundary and the wave-guide analytical value SAR_{ref}.DASY4 applies a boundary effect compensation algorithm according to IEEE 1528, which is possible since the axis of the probe never deviates more than 30 degrees from the normal surface orientation. SAR_{be}[%] is assessed during the calibration process and SPEAG warrants that the uncertainty at distances larger than 4mm is always less than 1%.In summary, the worst case boundary effect SAR tolerance[%] for scanning distances larger than 4mm is < ± 0.8%.

7.4 PROBE LINEARITY UNCERTAINTY

Field probe linearity uncertainty includes errors from the assessment and compensation of the diode compression effects for CW and pulsed signals with known duty cycles. This error is assessed using the procedure described in IEEE 1528. For SPEAG field probes, the measured difference between CW and pulsed signals, with pulse frequencies between 10 Hz and 1 kHz and duty cycles between 1 and 100, is < ±0.20 dB (< ±4.7%).

7.5 READOUT ELECTRONICS UNCERTAINTY

All uncertainties related to the probe readout electronics (DAE unit), including the gain and linearity of the instrumentation amplifier, its loading effect on the probe, and accuracy of the signal conversion algorithm, have been assessed accordingly to IEEE 1528.The combination (root-sum-square RSS method) of these components results in an overall maximum error of ±1.0%.

7.6 RESPONSE TIME UNCERTAINTY

The time response of the field probes is assessed by exposing the probe to a well-controlled electric field producing SAR larger than 2.0 W/kg at the tissue medium surface. The signal response time is evaluated as the time required by the system to reach 90% of the expected final value after an on/of switch of the power source. Analytically, it can be expressed as:

$$SAR_{tolerance}[\%] = 100 \times \left(\frac{T_m}{T_m + \tau e^{-T_m/\tau} - \tau} - 1\right)$$

where Tm is 500 ms, i.e., the time between measurement samples, and τ the time constant. The response time τ of SPEAG's probes is <5 ms. In the current implementation, DASY4 waits longer than 100 ms after having reached the grid point before starting a measurement, i.e., the response time uncertainty is negligible.

7.7 INTEGRATION TIME UNCERTAINTY

If the device under test does not emit a CW signal, the integration time applied to measure the electric field at a specific point may introduce additional uncertainties due to the discretization and can be assessed as follows

$$SAR_{tolerance}[\%] = 100 \times \sum_{allsub-frames} \frac{t_{frame}}{t_{integration}} \frac{slot_{idle}}{slot_{total}}$$

The tolerances for the different systems are given in Table 7.1, whereby the worst-case $SAR_{tolerance}$ is 2.6%.

System	$SAR_{tolerance}$ %
CW	0
CDMA*	0
WCDMA*	0
FDMA	0
IS-136	2.6
PDC	2.6
GSM/DCS/PCS	1.7
DECT	1.9
Worst-Case	2.6

Table 7.1

7.8 PROBE POSITIONER MECHANICAL TOLERANCE

The mechanical tolerance of the field probe positioner can introduce probe positioning uncertainties. The resulting SAR uncertainty is assessed by comparing the SAR obtained according to the specifications of the probe positioner with respect to the actual position defined by the geometric enter of the probe sensors. The tolerance is determined as:

$$SAR_{tolerance}[\%] = 100 \times \frac{d_{ss}}{\delta/2}$$

The specified repeatability of the RX robot family used in DASY4 systems is ±25 µm. The absolute accuracy for short distance movements is better than ±0.1mm, i.e., the $SAR_{tolerance}$[%] is better than 1.5% (rectangular).

7.9 PROBE POSITIONING

The probe positioning procedures affect the tolerance of the separation distance between the probe tip and the phantom surface as:

$$SAR_{tolerance}[\%] = 100 \times \frac{d_{ph}}{\delta/2}$$

where d_{ph} is the maximum deviation of the distance between the probe tip and the phantom surface. The optical surface detection has a precision of better than 0.2 mm, resulting in an $SAR_{tolerance}$[%] of <2.9% (rectangular distribution). Since the mechanical detection provides better accuracy, 2.9% is a worst-case figure for DASY4 system.

7.10 PHANTOM UNCERTAINTY

The SAR measurement uncertainty due to SPEAG phantom shell production tolerances has been evaluated using

$$SAR_{tolerance}[\%] \cong 100 \times \frac{2d}{a}, \qquad d << a$$

For a maximum deviation d of the inner and outer shell of the phantom from that specified in the CAD file of ±0.2 mm, and a 10mm spacing a between source and tissue liquid, the calculated phantom uncertainty is ±4.0%.

7.11 DASY4 UNCERTAINTY BUDGET

Error Description	Tolerance (±%)	Probability Distribution	Divisor	(C_i)		Standard Uncertainty (±%)		(v_i)
				(1g)	(10g)	(1g)	(10g)	
Measurement System								
Probe Calibration	4.8	Normal	1	1	1	4.8	4.8	∞
Axial Isotropy	4.7	Rectangular	$\sqrt{3}$	1	1	1.9	1.9	∞
Hemispherical Isotropy	9.6	Rectangular	$\sqrt{3}$	1	1	3.9	3.9	∞
Boundary effect	1.0	Rectangular	$\sqrt{3}$	1	1	0.6	0.6	∞
Linearity	4.7	Rectangular	$\sqrt{3}$	1	1	2.7	2.7	∞
System Detection Limit	1.0	Rectangular	$\sqrt{3}$	1	1	0.6	0.6	∞
Readout Electronics	1.0	Normal	1	1	1	1.0	1.0	∞
Response Time	0.8	Rectangular	$\sqrt{3}$	1	1	0.5	0.5	∞
Integration Time	2.6	Rectangular	$\sqrt{3}$	1	1	1.5	1.5	∞
RF Ambient Conditions	3.0	Rectangular	$\sqrt{3}$	1	1	1.7	1.7	∞
Probe Positioner	0.4	Rectangular	$\sqrt{3}$	1	1	0.2	0.2	∞
Probe positioning	2.9	Rectangular	$\sqrt{3}$	1	1	1.7	1.7	∞
Algorithms for Max. SAR Evaluation	1.0	Rectangular	$\sqrt{3}$	1	1	0.6	0.6	∞
Test EUT Related								
Device Positioning	2.9	Normal	1	1	1	2.9	2.9	875
Device Holder	3.6	Normal	1	1	1	3.6	3.6	5
Power Drift	5	Rectangular	$\sqrt{3}$	1	1	2.9	2.9	∞
Phantom and Tissue Parameters								
Phantom Uncertainty	4.0	Rectangular	$\sqrt{3}$	1	1	2.3	2.3	∞
Liquid Conductivity (target)	5.0	Rectangular	$\sqrt{3}$	0.64	0.43	1.8	1.2	∞
Liquid Conductivity (measurement)	2.5	Normal	1	0.64	0.43	1.6	1.1	∞
Liquid Permittivity (target)	5.0	Rectangular	$\sqrt{3}$	0.6	0.49	1.7	1.4	∞
Liquid Permittivity (measurement)	2.5	Normal	1	0.6	0.49	1.5	1.2	∞
Combined Standard Uncertainty						**10.3**	**10**	331
Coverage Factor for 95%						**kp=2**		
Expanded Uncertainty (K=2)						20.6	20.1	

Table 7.2

The table 7.2: Worst-Case uncertainty budget for DASY4 assessed according to IEEE P1528. The budget is valid for the frequency range 300MHz ~ 3 GHz and represents a worst-case analysis. For specific tests and configurations, the uncertainty could be considerable smaller.

8. INFORMATION ON THE TESTING LABORATORIES

We, ADT Corp., were founded in 1988 to provide our best service in EMC, Radio, Telecom and Safety consultation. Our laboratories are accredited and approved by the following approval agencies according to ISO/IEC 17025, Guide 25 or EN 45001:

USA	FCC, NVLAP, UL, A2LA
Germany	TUV Rheinland
Japan	VCCI
Norway	NEMKO
Canada	INDUSTRY CANADA , CSA
R.O.C.	CNLA, BSMI, DGT
Netherlands	Telefication
Singapore	PSB , GOST-ASIA(MOU)
Russia	CERTIS(MOU)

Copies of accreditation certificates of our laboratories obtained from approval agencies can be downloaded from our web site: www.adt.com.tw/index.5/phtml. If you have any comments, please feel free to contact us at the following:

Linko EMC/RF Lab:
Tel: 886-2-26052180
Fax: 886-2-26052943

Hsin Chu EMC/RF Lab:
Tel: 886-3-5935343
Fax: 886-3-5935342

Hwa Ya EMC/RF/Safety/ Telecom Lab:
Tel: 886-3-3183232
Fax: 886-3-3185050

Linko RF Lab.
Tel: 886-3-3270910
Fax: 886-3-3270892

Email: service@adt.com.tw
Web Site: www.adt.com.tw

The address and road map of all our labs can be found in our web site also.

Report Format Version 1.5

APPENDIX A: TEST CONFIGURATIONS AND TEST DATA

A1: TEST CONFIGURATION

Mode 1 Bottom Position

The bottom of the EUT to the flat phantom distance 5 mm

Mode 2 Tip Position

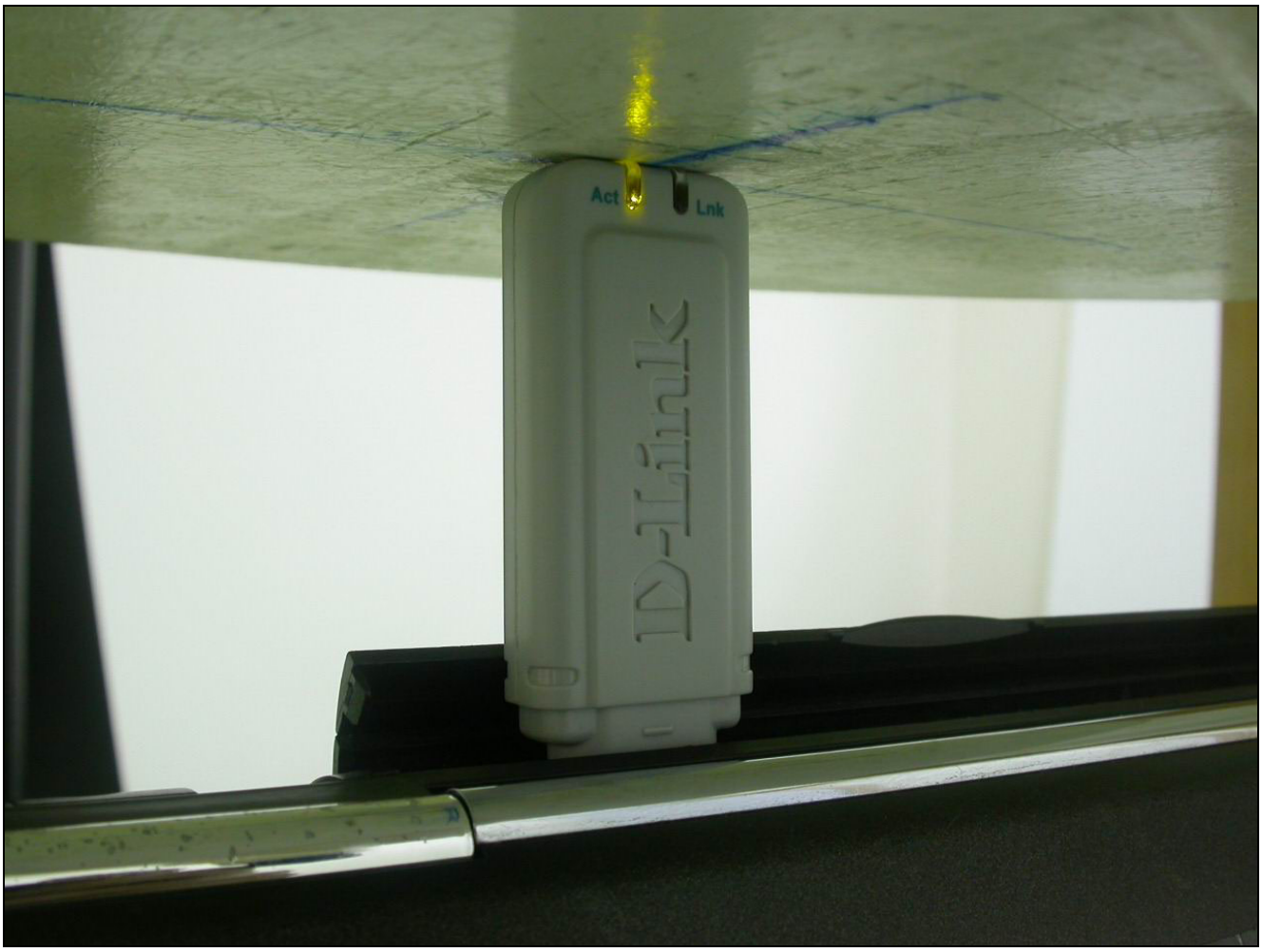

The tip of the EUT to the flat phantom distance 0 mm

Mode 3 Bottom Position

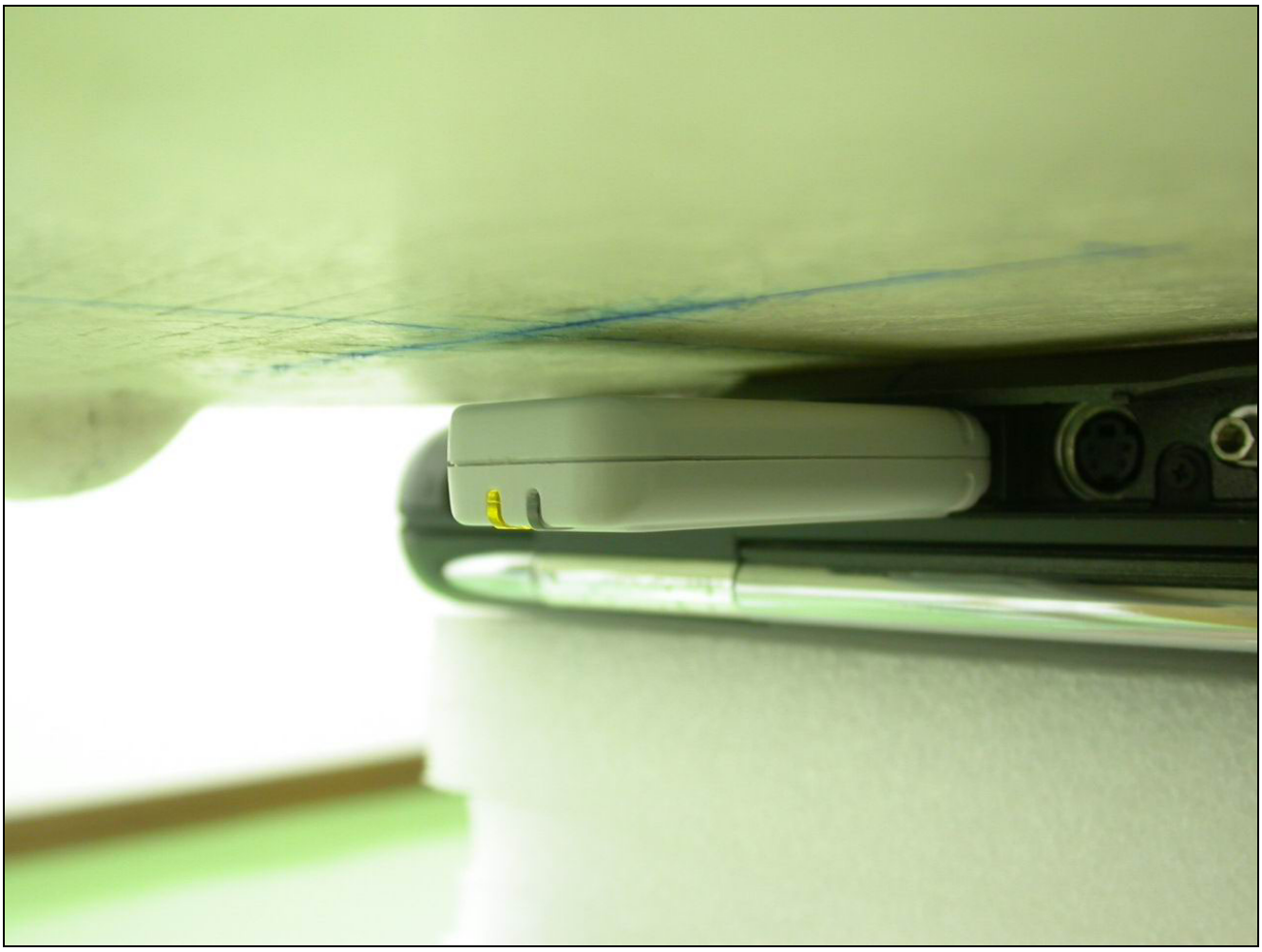

The bottom of the EUT to the flat phantom distance 5 mm

Mode 4 Tip Position

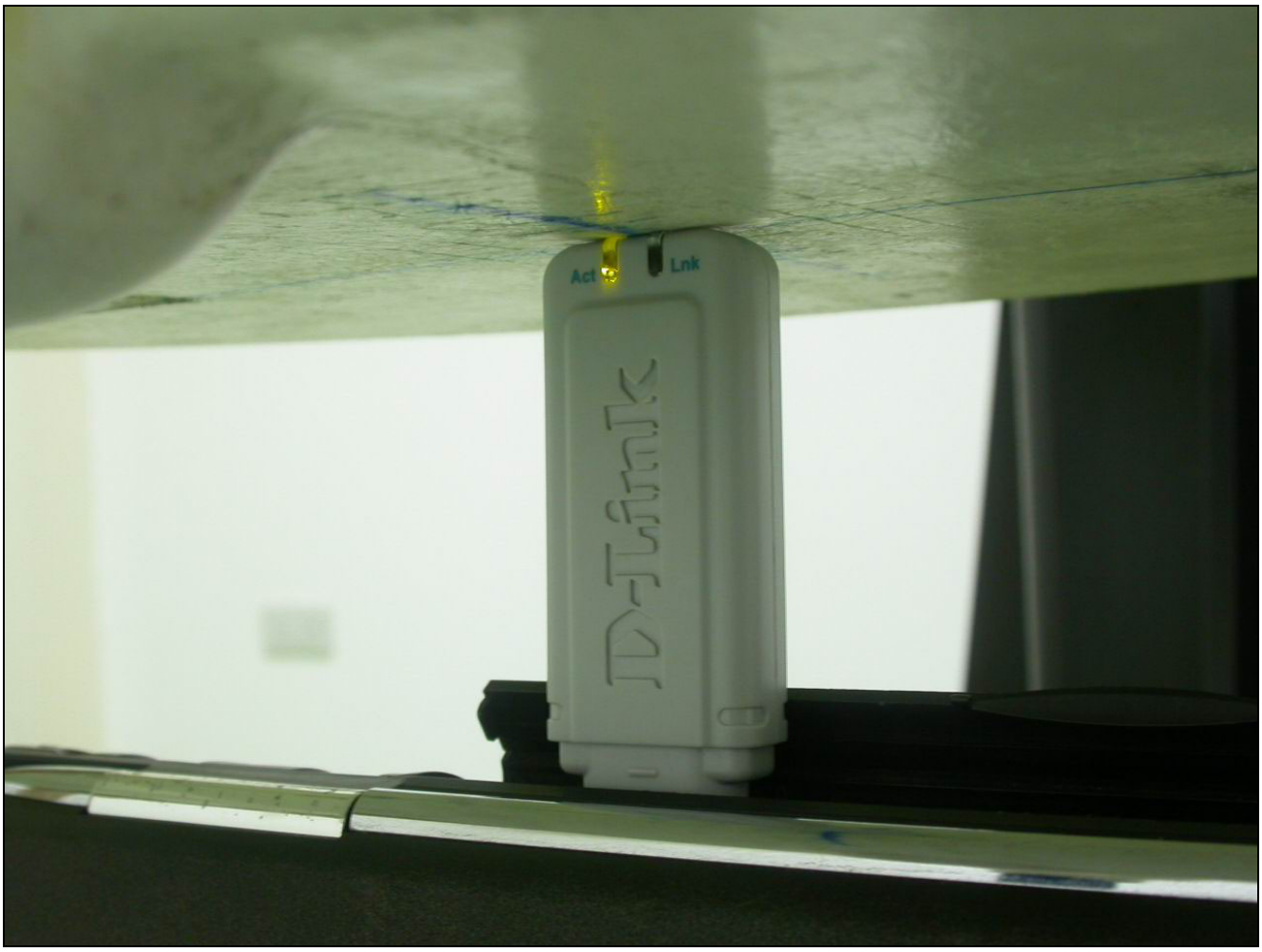

The tip of the EUT to the flat phantom distance 0 mm

EUT Photo

Liquid Level Photo

MSL 2450MHz D=155mm

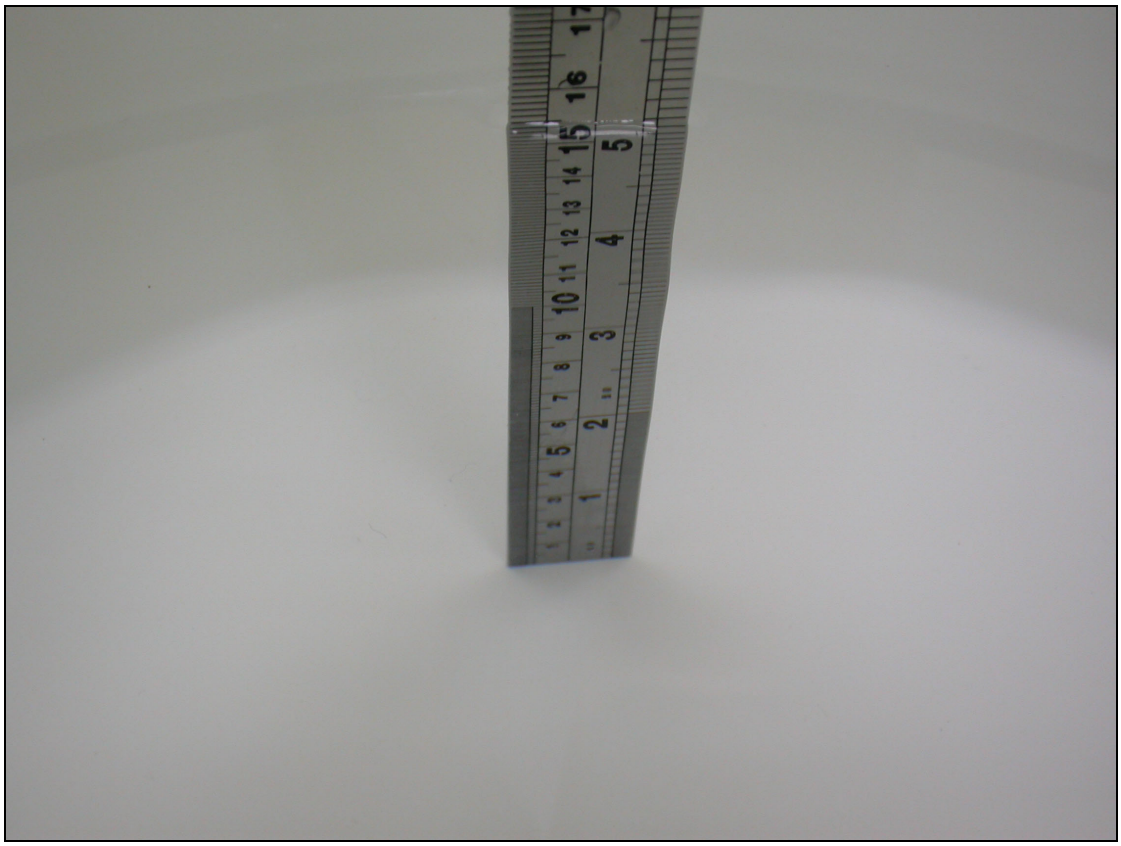

A2 : TEST DATA

Date/Time: 11/01/04 15:11:01

Test Laboratory: Advance Data Technology

DWL-G132 11b Bottom Mode 1 Ch 1

DUT: D-Link AirPlus Xtreme G DWL-G132 Wireless USB Adapter ; Type: DWL-G132 ; Test Frequency: 2412 MHz

Communication System: 802.11b ; Frequency: 2412 MHz ; Duty Cycle: 1:1 ; Modulation type: CCK
Medium: MSL2450 Medium parameters used: f = 2412 MHz; σ = 1.95 mho/m; ε_r = 52.6; ρ = 1000 kg/m^3 ; Liquid level : 155mm
Phantom section: Flat Section ; Separation distance : 5 mm (The bottom side of the EUT to the Phantom)
Antenna type : Internal Antenna ; Air temp. : 22.0 degrees ; Liquid temp. : 21.0 degrees
DASY4 Configuration:
- Probe: ET3DV6 - SN1687 ; ConvF(4.23, 4.23, 4.23) ; Calibrated: 2004/8/26
- Sensor-Surface: 4mm (Mechanical Surface Detection)
- Electronics: DAE3 Sn510 ; Calibrated: 2004/8/17
- Phantom: SAM 12 ; Type: SAM V4.0 ; Serial: TP 1202
- Measurement SW: DASY4, V4.3 Build 22 ; Postprocessing SW: SEMCAD, V1.8 Build 127

Low Channel/Area Scan (5x8x1): Measurement grid: dx=15mm, dy=15mm
Maximum value of SAR (measured) = 0.548 mW/g

Low Channel/Zoon Scan (7x7x7)/Cube 0: Measurement grid: dx=5mm, dy=5mm, dz=5mm
Reference Value = 13.4 V/m; Power Drift = 0.1 dB
Peak SAR (extrapolated) = 1.19 W/kg
SAR(1 g) = 0.643 mW/g; SAR(10 g) = 0.342 mW/g
Maximum value of SAR (measured) = 0.714 mW/g

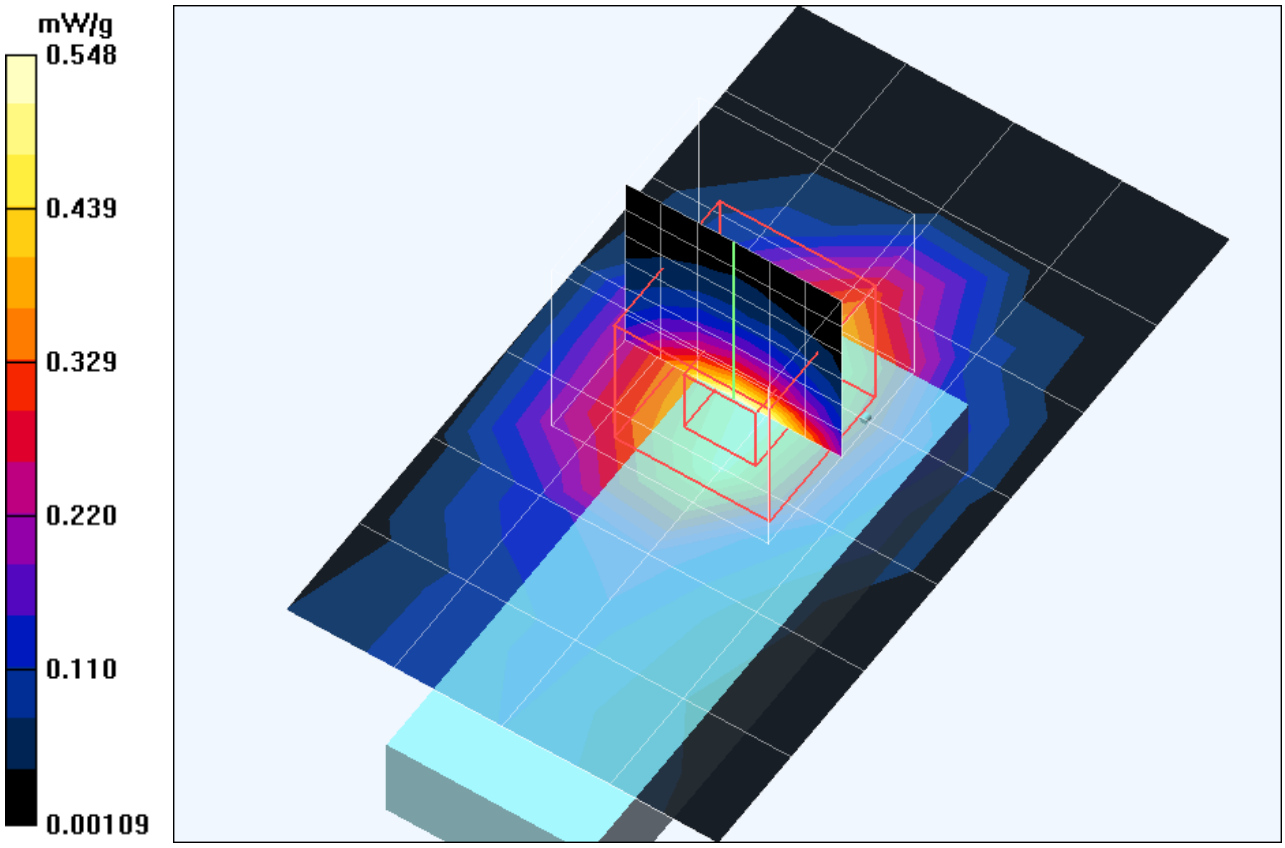

Date/Time: 11/01/04 15:28:29

Test Laboratory: Advance Data Technology

DWL-G132 11b Bottom Mode 1 Ch 6

DUT: D-Link AirPlus Xtreme G DWL-G132 Wireless USB Adapter ; Type: DWL-G132 ; Test Frequency: 2437 MHz

Communication System: 802.11b ; Frequency: 2437 MHz ; Duty Cycle: 1:1 ; Modulation type: CCK
Medium: MSL2450 Medium parameters used: f = 2437 MHz; σ = 1.99 mho/m; ε_r = 52.6; ρ = 1000 kg/m^3 ; Liquid level : 155mm
Phantom section: Flat Section ; Separation distance : 5 mm (The bottom side of the EUT to the Phantom)
Antenna type : Internal Antenna ; Air temp. : 22.0 degrees ; Liquid temp. : 21.0 degrees
DASY4 Configuration:
- Probe: ET3DV6 - SN1687 ; ConvF(4.23, 4.23, 4.23) ; Calibrated: 2004/8/26
- Sensor-Surface: 4mm (Mechanical Surface Detection)
- Electronics: DAE3 Sn510 ; Calibrated: 2004/8/17
- Phantom: SAM 12 ; Type: SAM V4.0 ; Serial: TP 1202
- Measurement SW: DASY4, V4.3 Build 22 ; Postprocessing SW: SEMCAD, V1.8 Build 127

Middle Channel/Area Scan (5x8x1): Measurement grid: dx=15mm, dy=15mm
Maximum value of SAR (measured) = 0.578 mW/g

Middle Channel/Zoon Scan (7x7x7)/Cube 0: Measurement grid: dx=5mm, dy=5mm, dz=5mm
Reference Value = 13.4 V/m; Power Drift = 0.0 dB
Peak SAR (extrapolated) = 0.964 W/kg
SAR(1 g) = 0.582 mW/g; SAR(10 g) = 0.321 mW/g
Maximum value of SAR (measured) = 0.650 mW/g

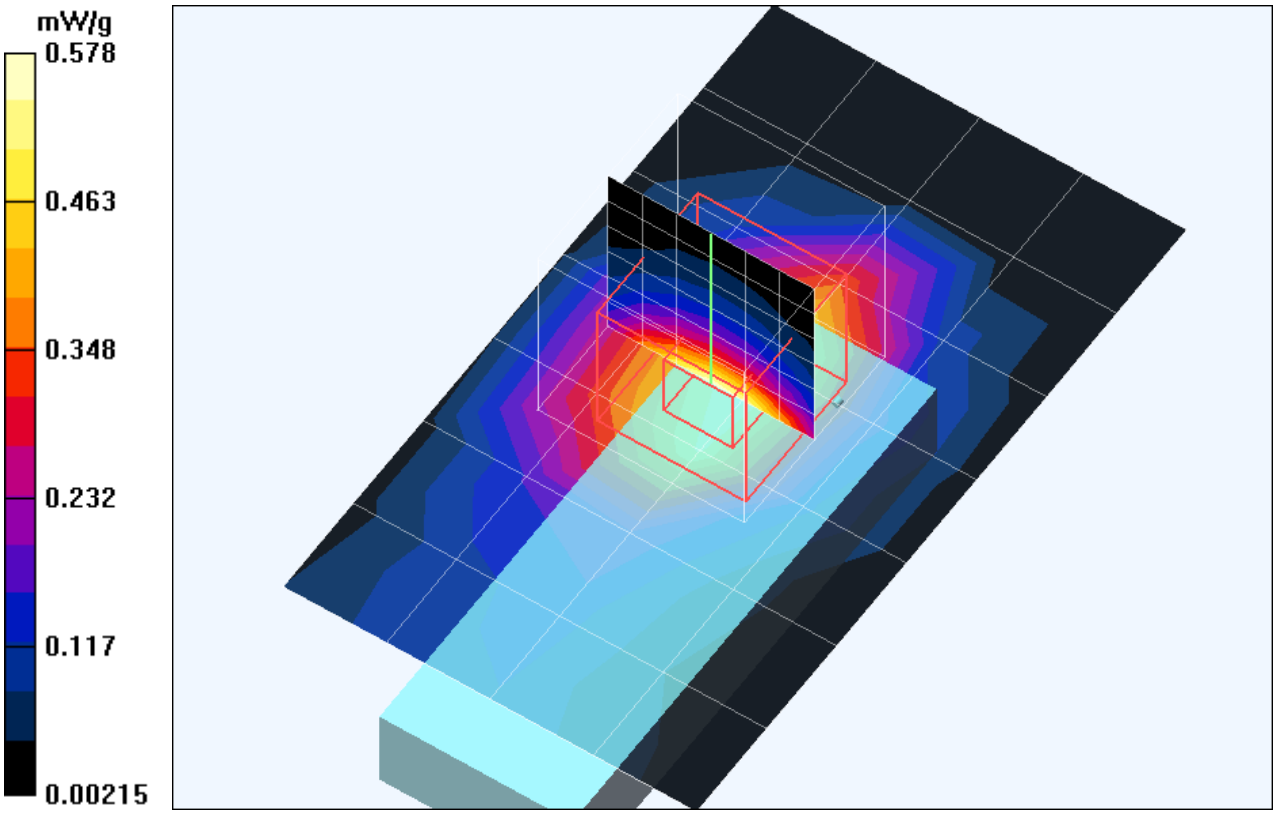

Date/Time: 11/01/04 15:48:30

Test Laboratory: Advance Data Technology

DWL-G132 11b Bottom Mode 1 Ch 11

DUT: D-Link AirPlus Xtreme G DWL-G132 Wireless USB Adapter ; Type: DWL-G132 ; Test Frequency: 2462 MHz

Communication System: 802.11b ; Frequency: 2462 MHz ; Duty Cycle: 1:1 ; Modulation type: CCK
Medium: MSL2450 Medium parameters used: f = 2462 MHz; σ = 2.02 mho/m; ε_r = 52.8; ρ = 1000 kg/m^3 ; Liquid level : 155mm
Phantom section: Flat Section ; Separation distance : 5 mm (The bottom side of the EUT to the Phantom)
Antenna type : Internal Antenna ; Air temp. : 22.0 degrees ; Liquid temp. : 21.0 degrees
DASY4 Configuration:
- Probe: ET3DV6 - SN1687 ; ConvF(4.23, 4.23, 4.23) ; Calibrated: 2004/8/26
- Sensor-Surface: 4mm (Mechanical Surface Detection)
- Electronics: DAE3 Sn510 ; Calibrated: 2004/8/17
- Phantom: SAM 12 ; Type: SAM V4.0 ; Serial: TP 1202
- Measurement SW: DASY4, V4.3 Build 22 ; Postprocessing SW: SEMCAD, V1.8 Build 127

High Channel/Area Scan (5x8x1): Measurement grid: dx=15mm, dy=15mm
Maximum value of SAR (measured) = 0.739 mW/g

High Channel/Zoon Scan (7x7x7)/Cube 0: Measurement grid: dx=5mm, dy=5mm, dz=5mm
Reference Value = 14.4 V/m; Power Drift = 0.0 dB
Peak SAR (extrapolated) = 1.27 W/kg
SAR(1 g) = 0.707 mW/g; SAR(10 g) = 0.384 mW/g
Maximum value of SAR (measured) = 0.804 mW/g

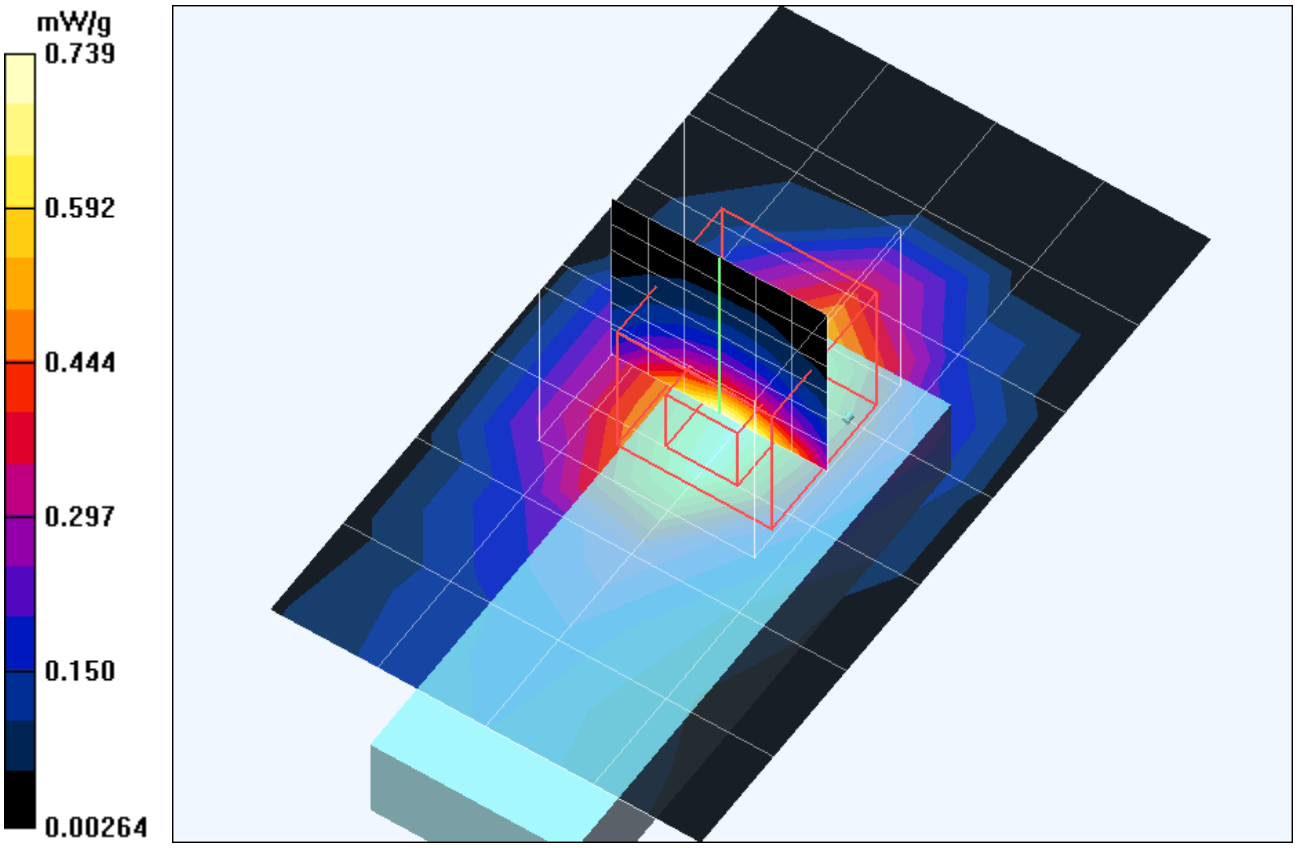

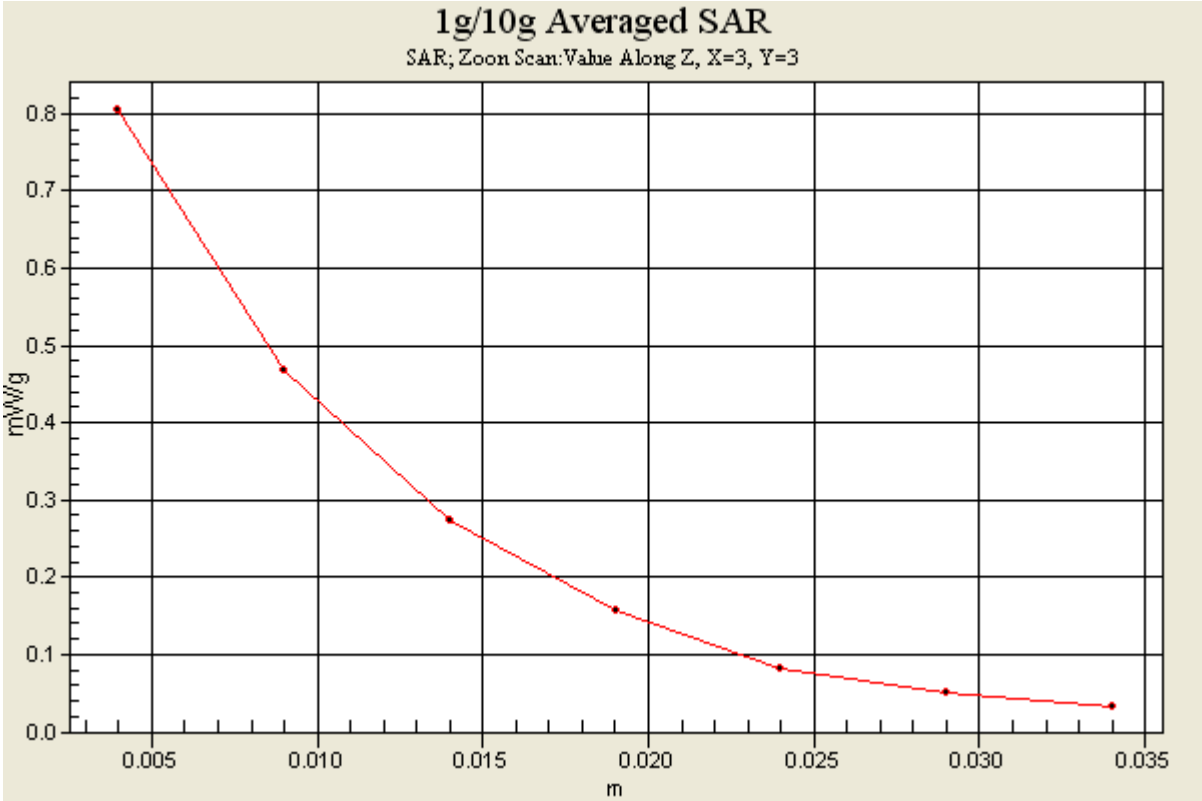
1g/10g Averaged SAR
SAR; Zoon Scan:Value Along Z, X=3, Y=3
mW/g
0.0
0.1
0.2
0.3
0.4
0.5
0.6
0.7
0.8
0.005
0.010
0.015
0.020
0.025
0.030
0.035
m

Date/Time: 11/01/04 17:13:34

Test Laboratory: Advance Data Technology

DWL-G132 11b Tip Mode 2 Ch 1

DUT: D-Link AirPlus Xtreme G DWL-G132 Wireless USB Adapter ; Type: DWL-G132 ; Test Frequency: 2412 MHz

Communication System: 802.11b ; Frequency: 2412 MHz; Duty Cycle: 1:1; Modulation type: CCK
Medium: MSL2450 Medium parameters used: f = 2412 MHz; σ = 1.95 mho/m; ε_r = 52.6; ρ = 1000 kg/m^3 ; Liquid level : 155 mm
Phantom section: Flat Section ; Separation distance : 0 mm (The tip of the EUT to the Phantom)
Antenna type : Internal Antenna ; Air temp. : 22.0 degrees ; Liquid temp. : 21.0 degrees
DASY4 Configuration:
- Probe: ET3DV6 - SN1687 ; ConvF(4.23, 4.23, 4.23) ; Calibrated: 2004/8/26
- Sensor-Surface: 4mm (Mechanical Surface Detection)
- Electronics: DAE3 Sn510; Calibrated: 2004/8/17
- Phantom: SAM 12; Type: SAM V4.0; Serial: TP 1202
- Measurement SW: DASY4, V4.3 Build 22; Postprocessing SW: SEMCAD, V1.8 Build 127

Low Channel/Area Scan (5x5x1): Measurement grid: dx=15mm, dy=15mm
Maximum value of SAR (measured) = 0.505 mW/g

Low Channel/Zoon Scan (7x7x7)/Cube 0: Measurement grid: dx=5mm, dy=5mm, dz=5mm
Reference Value = 16.8 V/m; Power Drift = -0.001 dB
Peak SAR (extrapolated) = 1.02 W/kg
SAR(1 g) = 0.453 mW/g; SAR(10 g) = 0.179 mW/g
Maximum value of SAR (measured) = 0.528 mW/g

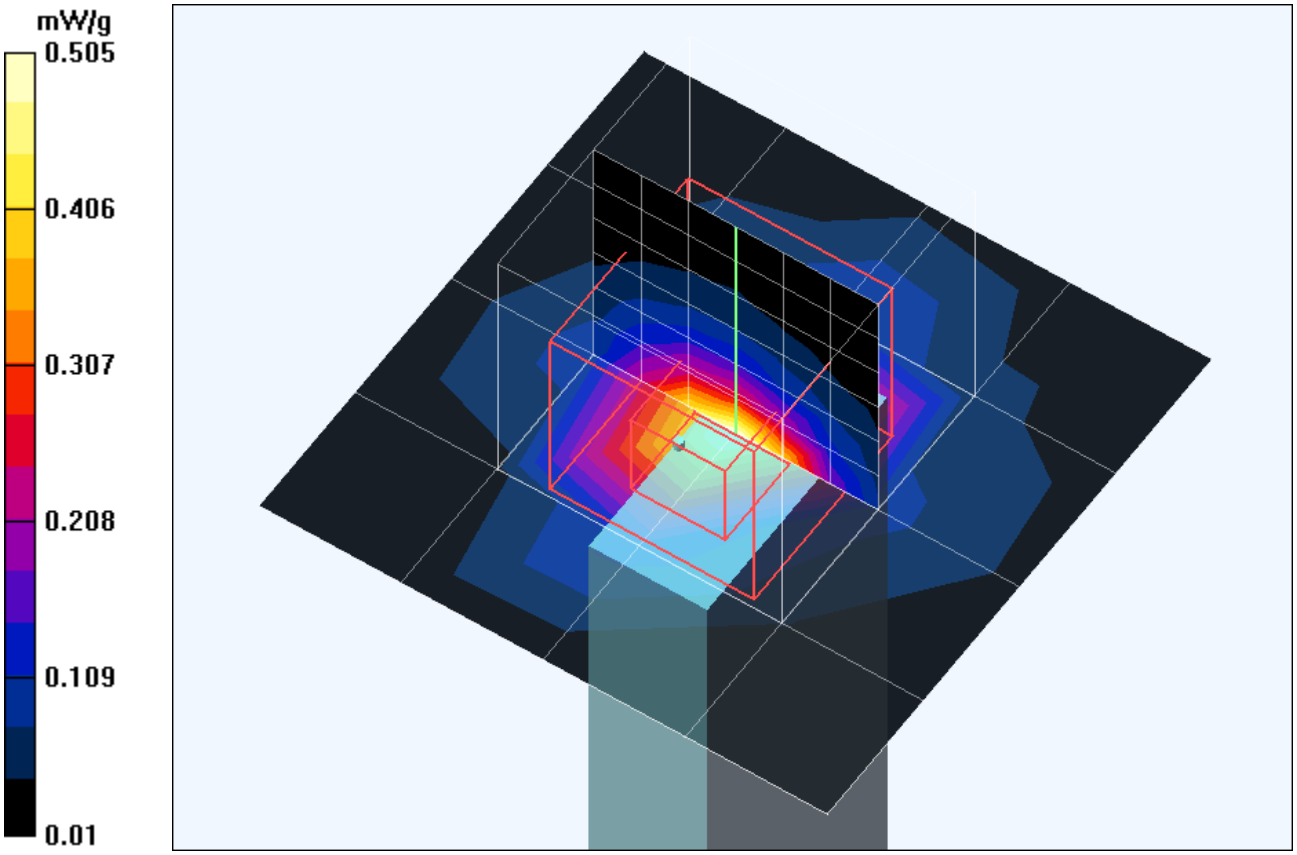

Date/Time: 11/01/04 18:03:56

Test Laboratory: Advance Data Technology

DWL-G132 11b Tip Mode 2 Ch 6

DUT: D-Link AirPlus Xtreme G DWL-G132 Wireless USB Adapter ; Type: DWL-G132 ; Test Frequency: 2437 MHz

Communication System: 802.11b ; Frequency: 2437 MHz; Duty Cycle: 1:1; Modulation type: CCK
Medium: MSL2450 Medium parameters used: f = 2437 MHz; σ = 1.99 mho/m; ε_r = 52.6; ρ = 1000 kg/m^3 ; Liquid level : 155 mm
Phantom section: Flat Section ; Separation distance : 0 mm (The tip of the EUT to the Phantom)
Antenna type : Internal Antenna ; Air temp. : 22.0 degrees ; Liquid temp. : 21.0 degrees
DASY4 Configuration:
- Probe: ET3DV6 - SN1687 ; ConvF(4.23, 4.23, 4.23) ; Calibrated: 2004/8/26
- Sensor-Surface: 4mm (Mechanical Surface Detection)
- Electronics: DAE3 Sn510; Calibrated: 2004/8/17
- Phantom: SAM 12; Type: SAM V4.0; Serial: TP 1202
- Measurement SW: DASY4, V4.3 Build 22; Postprocessing SW: SEMCAD, V1.8 Build 127

Middle Channel 2/Area Scan (5x5x1): Measurement grid: dx=15mm, dy=15mm
Maximum value of SAR (measured) = 0.553 mW/g

Middle Channel/Zoon Scan (7x7x7)/Cube 0: Measurement grid: dx=5mm, dy=5mm, dz=5mm
Reference Value = 17.8 V/m; Power Drift = -0.2 dB
Peak SAR (extrapolated) = 1.04 W/kg
SAR(1 g) = 0.457 mW/g; SAR(10 g) = 0.181 mW/g
Maximum value of SAR (measured) = 0.533 mW/g

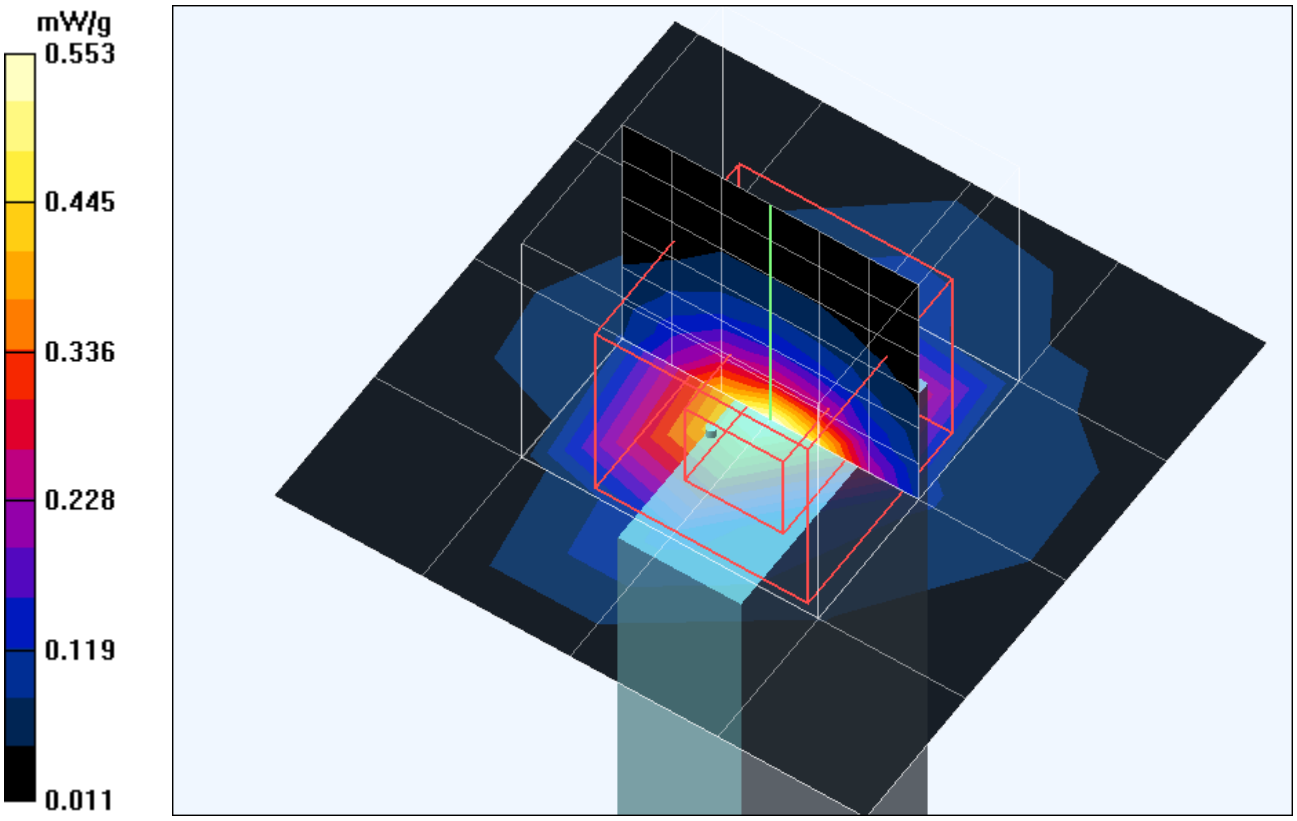

Date/Time: 11/01/04 17:46:30

Test Laboratory: Advance Data Technology

DWL-G132 11b Tip Mode 2 Ch 11

DUT: D-Link AirPlus Xtreme G DWL-G132 Wireless USB Adapter ; Type: DWL-G132 ; Test Frequency: 2462 MHz

Communication System: 802.11b ; Frequency: 2462 MHz; Duty Cycle: 1:1; Modulation type: CCK
Medium: MSL2450 Medium parameters used: f = 2462 MHz; σ = 2.02 mho/m; ε_r = 52.8; ρ = 1000 kg/m^3 ; Liquid level : 155 mm
Phantom section: Flat Section ; Separation distance : 0 mm (The tip of the EUT to the Phantom)
Antenna type : Internal Antenna ; Air temp. : 22.0 degrees ; Liquid temp. : 21.0 degrees
DASY4 Configuration:
- Probe: ET3DV6 - SN1687 ; ConvF(4.23, 4.23, 4.23) ; Calibrated: 2004/8/26
- Sensor-Surface: 4mm (Mechanical Surface Detection)
- Electronics: DAE3 Sn510; Calibrated: 2004/8/17
- Phantom: SAM 12; Type: SAM V4.0; Serial: TP 1202
- Measurement SW: DASY4, V4.3 Build 22; Postprocessing SW: SEMCAD, V1.8 Build 127

High Channel/Area Scan (5x5x1): Measurement grid: dx=15mm, dy=15mm
Maximum value of SAR (measured) = 0.792 mW/g

High Channel/Zoon Scan (7x7x7)/Cube 0: Measurement grid: dx=5mm, dy=5mm, dz=5mm
Reference Value = 20.8 V/m; Power Drift = -0.2 dB
Peak SAR (extrapolated) = 1.65 W/kg
SAR(1 g) = 0.674 mW/g; SAR(10 g) = 0.255 mW/g
Maximum value of SAR (measured) = 0.800 mW/g

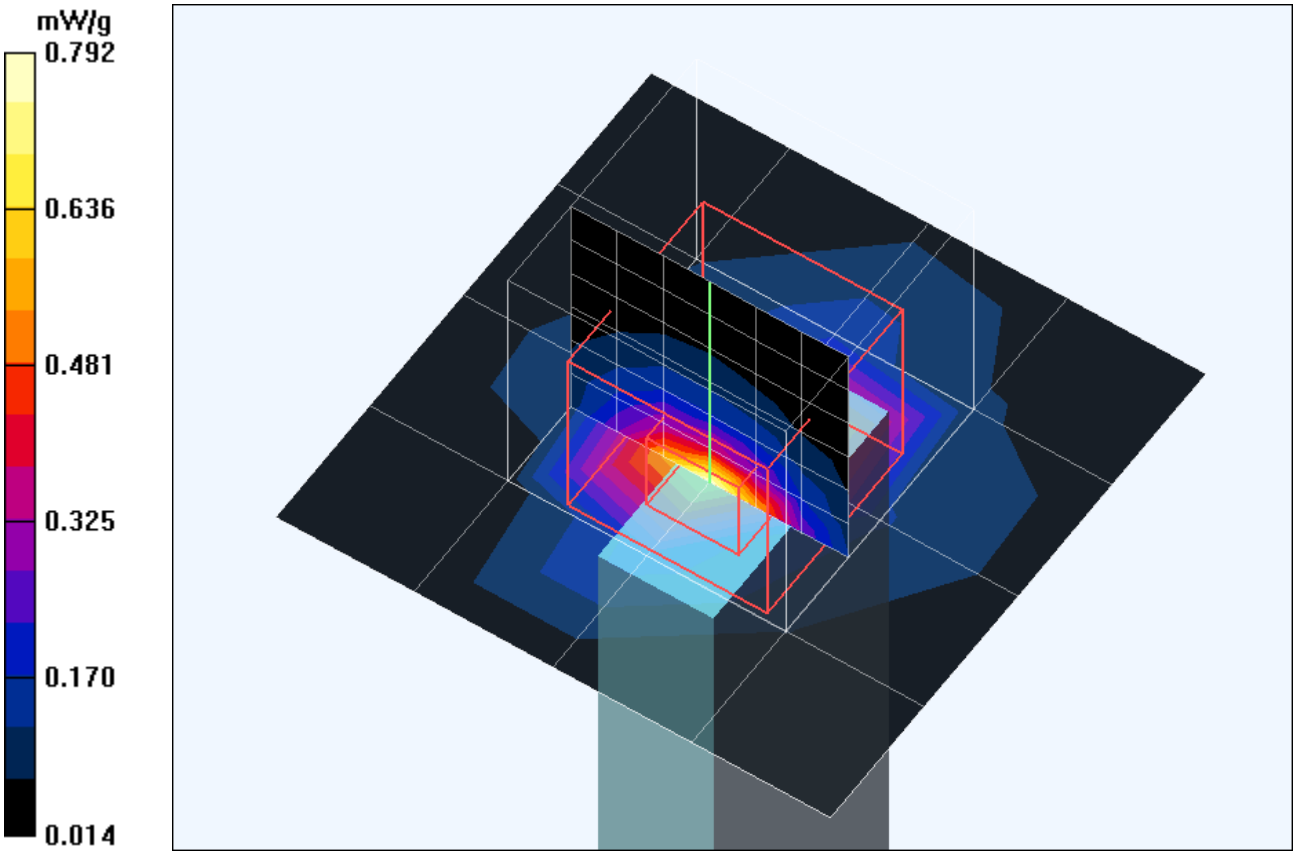

Date/Time: 11/01/04 16:09:43

Test Laboratory: Advance Data Technology

DWL-G132 11g Bottom Mode 3 Ch 1

DUT: D-Link AirPlus Xtreme G DWL-G132 Wireless USB Adapter ; Type: DWL-G132 ; Test Frequency: 2412 MHz

Communication System: 802.11g ; Frequency: 2412 MHz ; Duty Cycle: 1:1 ; Modulation type: OFDM
Medium: MSL2450 Medium parameters used: f = 2412 MHz; σ = 1.95 mho/m; ε_r = 52.6; ρ = 1000 kg/m^3 ; Liquid level : 155mm
Phantom section: Flat Section ; Separation distance : 5 mm (The bottom side of the EUT to the Phantom)
Antenna type : Internal Antenna ; Air temp. : 22.0 degrees ; Liquid temp. : 21.0 degrees
DASY4 Configuration:
- Probe: ET3DV6 - SN1687 ; ConvF(4.23, 4.23, 4.23) ; Calibrated: 2004/8/26
- Sensor-Surface: 4mm (Mechanical Surface Detection)
- Electronics: DAE3 Sn510 ; Calibrated: 2004/8/17
- Phantom: SAM 12 ; Type: SAM V4.0 ; Serial: TP 1202
- Measurement SW: DASY4, V4.3 Build 22 ; Postprocessing SW: SEMCAD, V1.8 Build 127

Low Channel/Area Scan (5x8x1): Measurement grid: dx=15mm, dy=15mm
Maximum value of SAR (measured) = 0.426 mW/g

Low Channel/Zoon Scan (7x7x7)/Cube 0: Measurement grid: dx=5mm, dy=5mm, dz=5mm
Reference Value = 10.1 V/m; Power Drift = -0.1 dB
Peak SAR (extrapolated) = 0.769 W/kg
SAR(1 g) = 0.438 mW/g; SAR(10 g) = 0.237 mW/g
Maximum value of SAR (measured) = 0.481 mW/g

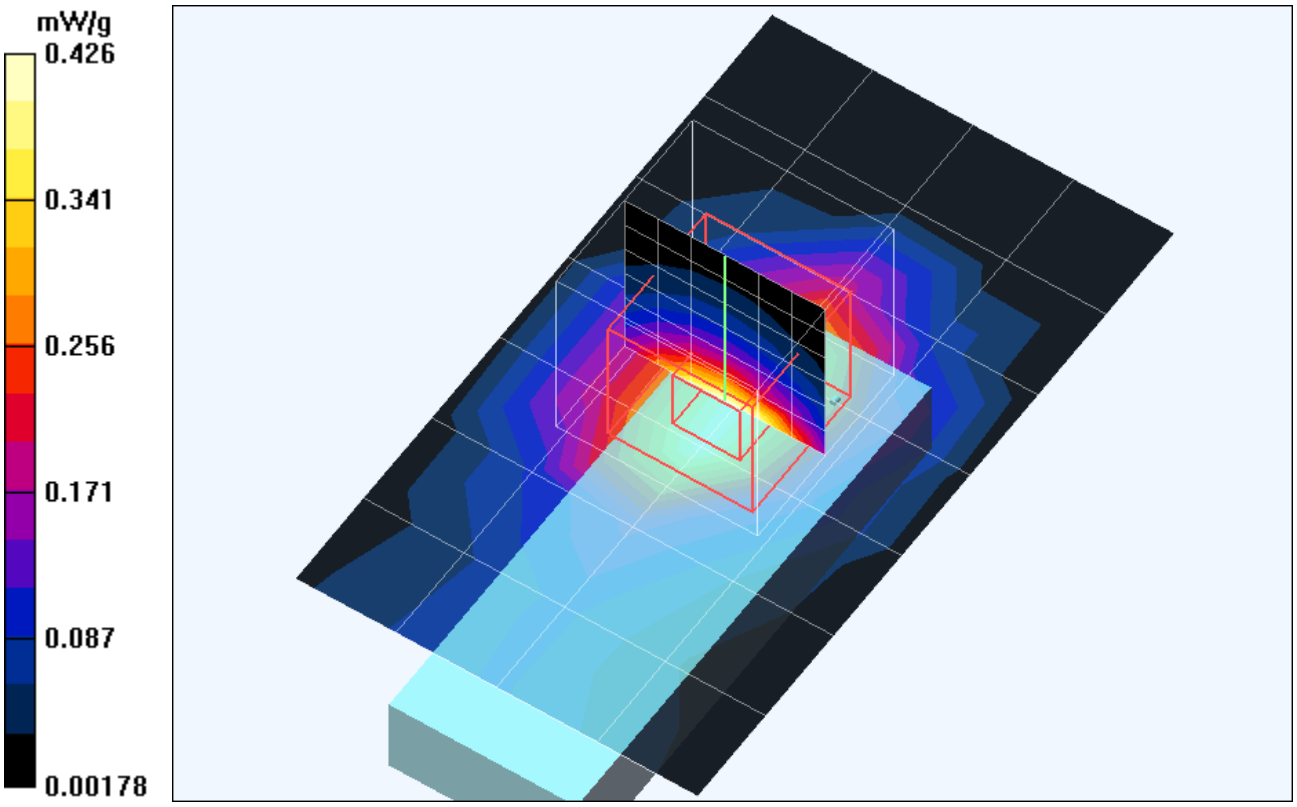

Date/Time: 11/01/04 16:27:20

Test Laboratory: Advance Data Technology

DWL-G132 11g Bottom Mode 3 Ch 6

DUT: D-Link AirPlus Xtreme G DWL-G132 Wireless USB Adapter ; Type: DWL-G132 ; Test Frequency: 2437 MHz

Communication System: 802.11g ; Frequency: 2437 MHz ; Duty Cycle: 1:1 ; Modulation type: OFDM
Medium: MSL2450 Medium parameters used: f = 2437 MHz; σ = 1.99 mho/m; ε_r = 52.6; ρ = 1000 kg/m^3 ; Liquid level : 155mm
Phantom section: Flat Section ; Separation distance : 5 mm (The bottom side of the EUT to the Phantom)
Antenna type : Internal Antenna ; Air temp. : 22.0 degrees ; Liquid temp. : 21.0 degrees
DASY4 Configuration:
- Probe: ET3DV6 - SN1687 ; ConvF(4.23, 4.23, 4.23) ; Calibrated: 2004/8/26
- Sensor-Surface: 4mm (Mechanical Surface Detection)
- Electronics: DAE3 Sn510 ; Calibrated: 2004/8/17
- Phantom: SAM 12 ; Type: SAM V4.0 ; Serial: TP 1202
- Measurement SW: DASY4, V4.3 Build 22 ; Postprocessing SW: SEMCAD, V1.8 Build 127

Middle Channel/Area Scan (5x8x1): Measurement grid: dx=15mm, dy=15mm
Maximum value of SAR (measured) = 0.451 mW/g

Middle Channel/Zoon Scan (7x7x7)/Cube 0: Measurement grid: dx=5mm, dy=5mm, dz=5mm
Reference Value = 10.4 V/m; Power Drift = 0.2 dB
Peak SAR (extrapolated) = 0.855 W/kg
SAR(1 g) = 0.510 mW/g; SAR(10 g) = 0.278 mW/g
Maximum value of SAR (measured) = 0.567 mW/g

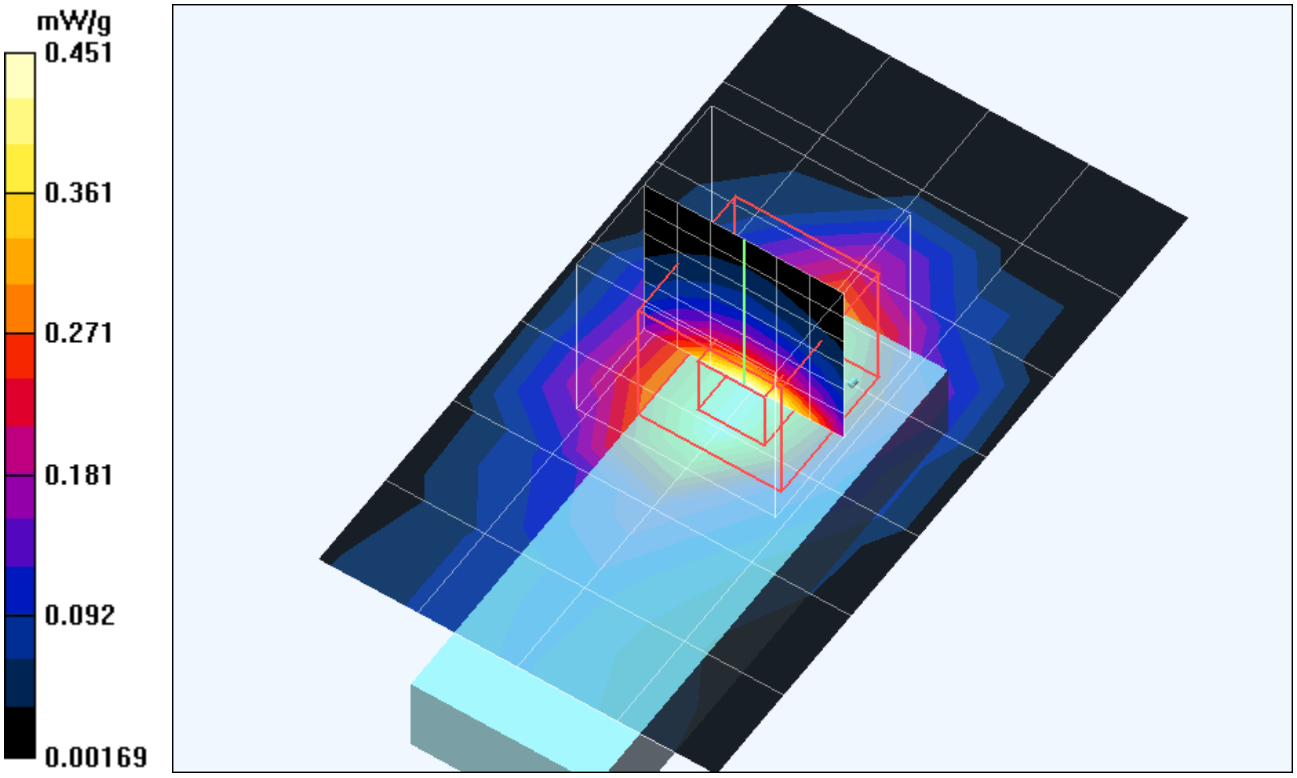

Date/Time: 11/01/04 16:45:36

Test Laboratory: Advance Data Technology

DWL-G132 11g Bottom Mode 3 Ch 11

DUT: D-Link AirPlus Xtreme G DWL-G132 Wireless USB Adapter ; Type: DWL-G132 ; Test Frequency: 2462 MHz

Communication System: 802.11g ; Frequency: 2462 MHz ; Duty Cycle: 1:1 ; Modulation type: OFDM
Medium: MSL2450 Medium parameters used: f = 2462 MHz; σ = 2.02 mho/m; ε_r = 52.8; ρ = 1000 kg/m^3 ; Liquid level : 155mm
Phantom section: Flat Section ; Separation distance : 5 mm (The bottom side of the EUT to the Phantom)
Antenna type : Internal Antenna ; Air temp. : 22.0 degrees ; Liquid temp. : 21.0 degrees
DASY4 Configuration:
- Probe: ET3DV6 - SN1687 ; ConvF(4.23, 4.23, 4.23) ; Calibrated: 2004/8/26
- Sensor-Surface: 4mm (Mechanical Surface Detection)
- Electronics: DAE3 Sn510 ; Calibrated: 2004/8/17
- Phantom: SAM 12 ; Type: SAM V4.0 ; Serial: TP 1202
- Measurement SW: DASY4, V4.3 Build 22 ; Postprocessing SW: SEMCAD, V1.8 Build 127

High Channel/Area Scan (5x8x1): Measurement grid: dx=15mm, dy=15mm
Maximum value of SAR (measured) = 0.316 mW/g

High Channel/Zoon Scan (7x7x7)/Cube 0: Measurement grid: dx=5mm, dy=5mm, dz=5mm
Reference Value = 8.88 V/m; Power Drift = -0.2 dB
Peak SAR (extrapolated) = 0.494 W/kg
SAR(1 g) = 0.285 mW/g; SAR(10 g) = 0.158 mW/g
Maximum value of SAR (measured) = 0.315 mW/g

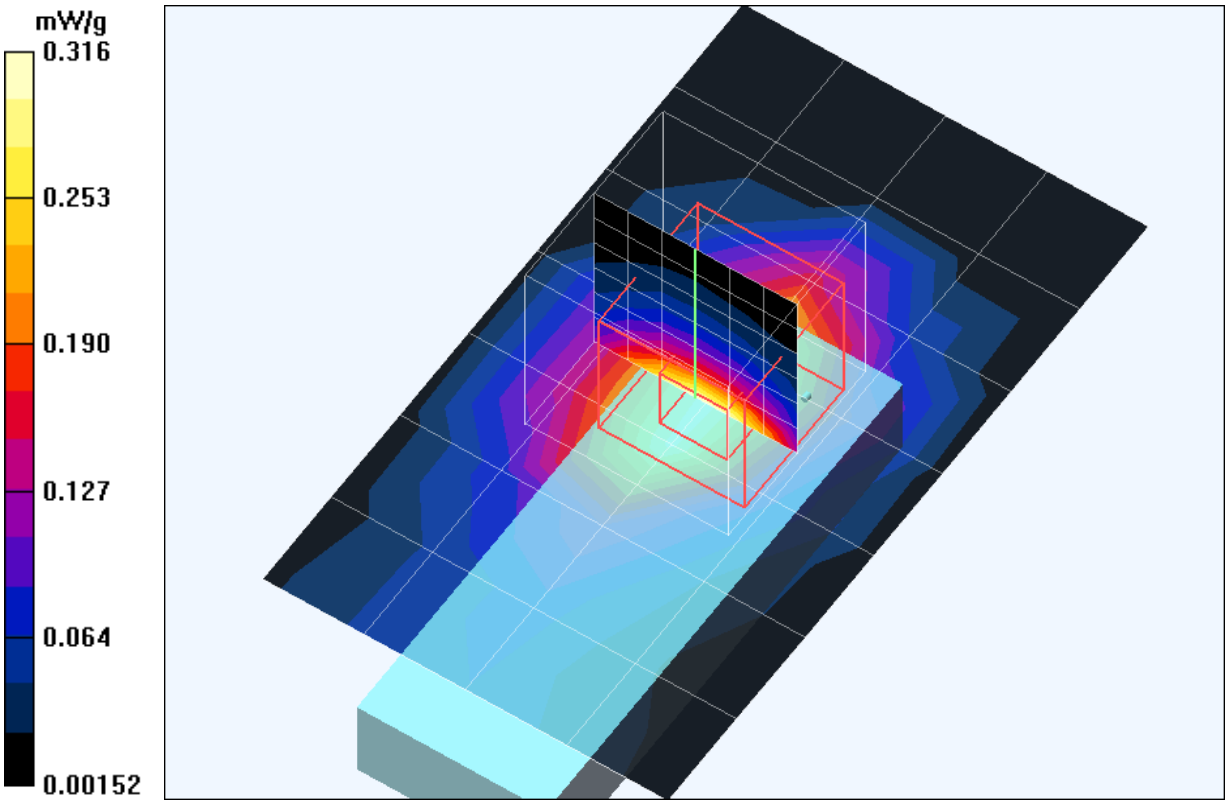

Date/Time: 11/01/04 18:19:54

Test Laboratory: Advance Data Technology

DWL-G132 11g Tip Mode 4 Ch 1

DUT: D-Link AirPlus Xtreme G DWL-G132 Wireless USB Adapter ; Type: DWL-G132 ; Test Frequency: 2412 MHz

Communication System: 802.11g ; Frequency: 2412 MHz; Duty Cycle: 1:1; Modulation type: OFDM
Medium: MSL2450 Medium parameters used: f = 2412 MHz; σ = 1.95 mho/m; ε_r = 52.6; ρ = 1000 kg/m^3 ; Liquid level : 155 mm
Phantom section: Flat Section ; Separation distance : 0 mm (The tip of the EUT to the Phantom)
Antenna type : Internal Antenna ; Air temp. : 22.0 degrees ; Liquid temp. : 21.0 degrees
DASY4 Configuration:
- Probe: ET3DV6 - SN1687 ; ConvF(4.23, 4.23, 4.23) ; Calibrated: 2004/8/26
- Sensor-Surface: 4mm (Mechanical Surface Detection)
- Electronics: DAE3 Sn510; Calibrated: 2004/8/17
- Phantom: SAM 12; Type: SAM V4.0; Serial: TP 1202
- Measurement SW: DASY4, V4.3 Build 22; Postprocessing SW: SEMCAD, V1.8 Build 127

Low Channel/Area Scan (5x5x1): Measurement grid: dx=15mm, dy=15mm
Maximum value of SAR (measured) = 0.324 mW/g

Low Channel/Zoon Scan (7x7x7)/Cube 0: Measurement grid: dx=5mm, dy=5mm, dz=5mm
Reference Value = 14 V/m; Power Drift = -0.2 dB
Peak SAR (extrapolated) = 0.650 W/kg
SAR(1 g) = 0.287 mW/g; SAR(10 g) = 0.113 mW/g
Maximum value of SAR (measured) = 0.328 mW/g

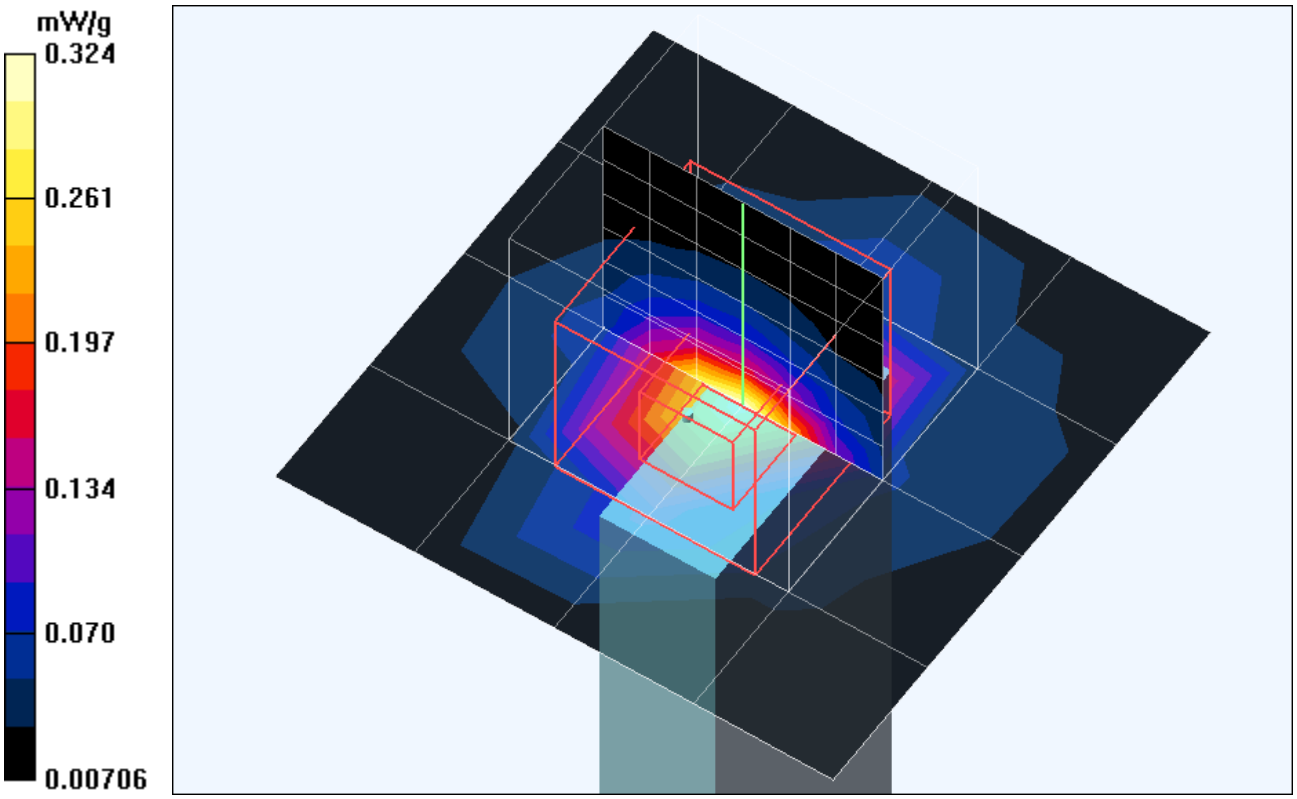

Date/Time: 11/01/04 18:36:49

Test Laboratory: Advance Data Technology

DWL-G132 11g Tip Mode 4 Ch 6

DUT: D-Link AirPlus Xtreme G DWL-G132 Wireless USB Adapter ; Type: DWL-G132 ; Test Frequency: 2437 MHz

Communication System: 802.11g ; Frequency: 2437 MHz; Duty Cycle: 1:1; Modulation type: OFDM
Medium: MSL2450 Medium parameters used: f = 2437 MHz; σ = 1.99 mho/m; ε_r = 52.6; ρ = 1000 kg/m^3 ; Liquid level : 155 mm
Phantom section: Flat Section ; Separation distance : 0 mm (The tip of the EUT to the Phantom)
Antenna type : Internal Antenna ; Air temp. : 22.0 degrees ; Liquid temp. : 21.0 degrees
DASY4 Configuration:
- Probe: ET3DV6 - SN1687 ; ConvF(4.23, 4.23, 4.23) ; Calibrated: 2004/8/26
- Sensor-Surface: 4mm (Mechanical Surface Detection)
- Electronics: DAE3 Sn510; Calibrated: 2004/8/17
- Phantom: SAM 12; Type: SAM V4.0; Serial: TP 1202
- Measurement SW: DASY4, V4.3 Build 22; Postprocessing SW: SEMCAD, V1.8 Build 127

Middle Channel/Area Scan (5x5x1): Measurement grid: dx=15mm, dy=15mm
Maximum value of SAR (measured) = 0.405 mW/g

Middle Channel/Zoon Scan (7x7x7)/Cube 0: Measurement grid: dx=5mm, dy=5mm, dz=5mm
Reference Value = 14.9 V/m; Power Drift = -0.2 dB
Peak SAR (extrapolated) = 0.875 W/kg
SAR(1 g) = 0.350 mW/g; SAR(10 g) = 0.135 mW/g
Maximum value of SAR (measured) = 0.406 mW/g

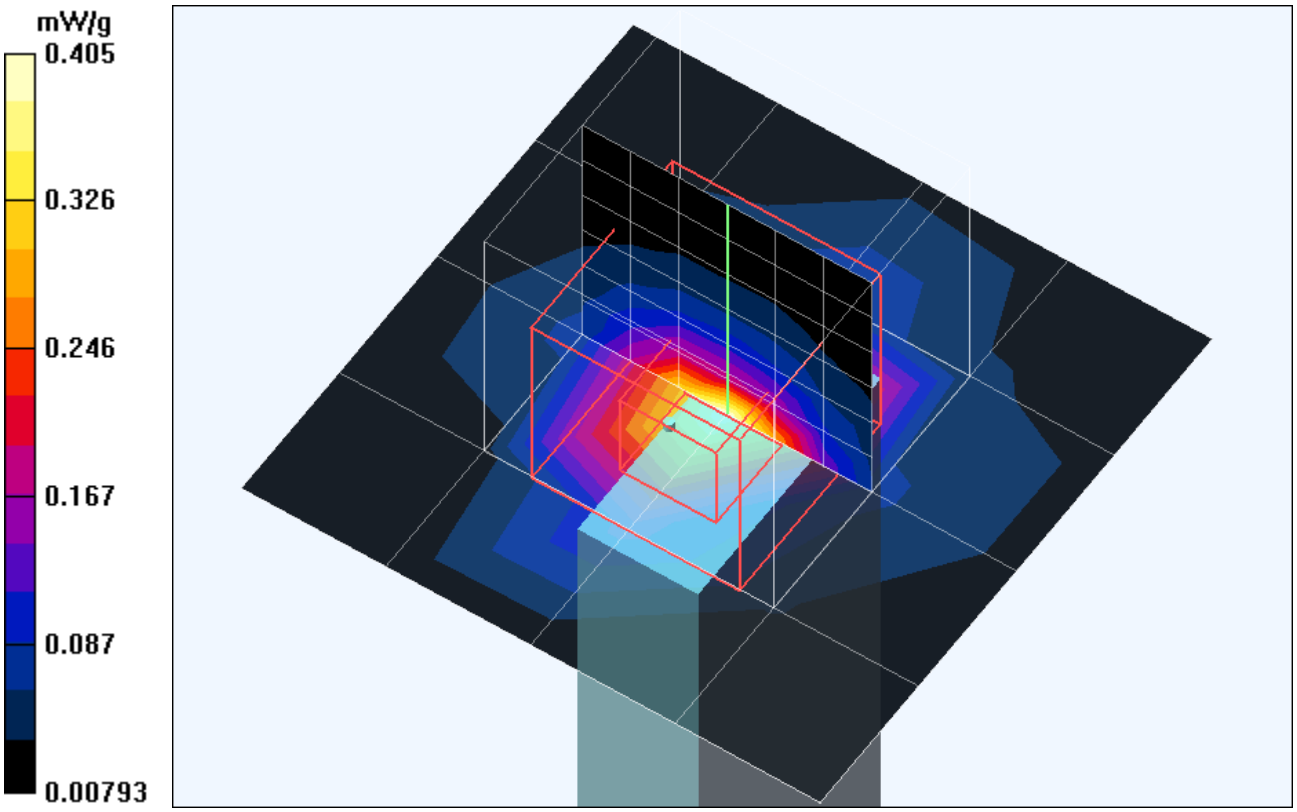

Date/Time: 11/01/04 18:53:12

Test Laboratory: Advance Data Technology

DWL-G132 11g Tip Mode 4 Ch 11

DUT: D-Link AirPlus Xtreme G DWL-G132 Wireless USB Adapter ; Type: DWL-G132 ; Test Frequency: 2462 MHz

Communication System: 802.11g ; Frequency: 2462 MHz; Duty Cycle: 1:1; Modulation type: OFDM
Medium: MSL2450 Medium parameters used: f = 2462 MHz; σ = 2.02 mho/m; ε_r = 52.8; ρ = 1000 kg/m^3 ; Liquid level : 155 mm
Phantom section: Flat Section ; Separation distance : 0 mm (The tip of the EUT to the Phantom)
Antenna type : Internal Antenna ; Air temp. : 22.0 degrees ; Liquid temp. : 21.0 degrees
DASY4 Configuration:
- Probe: ET3DV6 - SN1687 ; ConvF(4.23, 4.23, 4.23) ; Calibrated: 2004/8/26
- Sensor-Surface: 4mm (Mechanical Surface Detection)
- Electronics: DAE3 Sn510; Calibrated: 2004/8/17
- Phantom: SAM 12; Type: SAM V4.0; Serial: TP 1202
- Measurement SW: DASY4, V4.3 Build 22; Postprocessing SW: SEMCAD, V1.8 Build 127

High Channel/Area Scan (5x5x1): Measurement grid: dx=15mm, dy=15mm
Maximum value of SAR (measured) = 0.310 mW/g

High Channel/Zoon Scan (7x7x7)/Cube 0: Measurement grid: dx=5mm, dy=5mm, dz=5mm
Reference Value = 12.8 V/m; Power Drift = -0.2 dB
Peak SAR (extrapolated) = 0.608 W/kg
SAR(1 g) = 0.265 mW/g; SAR(10 g) = 0.100 mW/g
Maximum value of SAR (measured) = 0.307 mW/g

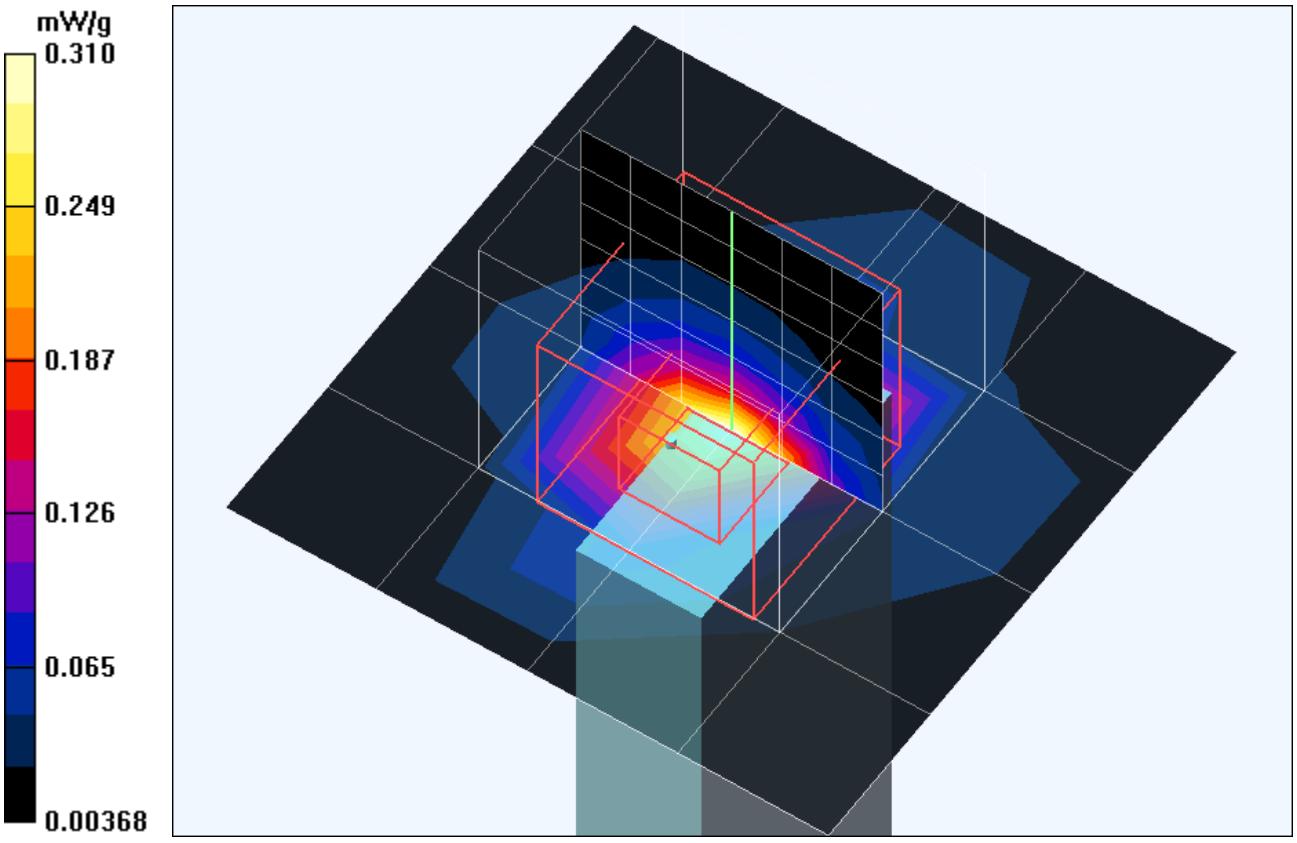

A3 : SYSTEM VALIDATION

Date/Time: 11/01/04 09:46:08

Test Laboratory: Advance Data Technology

System Validation Check-MSL 2450MHz

DUT: Dipole 2450 MHz ; Type: D2450V2 ; Serial: 716 ; Test Frequency: 2450 MHz

Communication System: CW ; Frequency: 2450 MHz; Duty Cycle: 1:1; Modulation type: CW
Medium: MSL2450;Medium parameters used: f = 2450 MHz; σ = 2 mho/m; ε_r = 52.7; ρ = 1000 kg/m^3 ; Liquid level : 155mm
Phantom section: Flat Section ; Separation distance : 10 mm (The feetpoint of the dipole to the Phantom)Air temp. : 22.0 degrees ; Liquid temp. : 21.0 degrees
DASY4 Configuration:
- Probe: ET3DV6 - SN1687 ; ConvF(4.23, 4.23, 4.23) ; Calibrated: 2004/8/26
- Sensor-Surface: 4mm (Mechanical Surface Detection)
- Electronics: DAE3 Sn510; Calibrated: 2004/8/17
- Phantom: SAM 12; Type: SAM V4.0; Serial: TP 1202
- Measurement SW: DASY4, V4.3 Build 22; Postprocessing SW: SEMCAD, V1.8 Build 127

d=10mm, Pin=250mW/Area Scan (5x6x1): Measurement grid: dx=15mm, dy=15mm
Maximum value of SAR (measured) = 11.9 mW/g

d=10mm, Pin=250mW/Zoom Scan (7x7x7) /Cube 0: Measurement grid: dx=5mm, dy=5mm, dz=5mm
Reference Value = 83.2 V/m; Power Drift = -0.2 dB
Peak SAR (extrapolated) = 21.9 W/kg
SAR(1 g) = 11.7 mW/g; SAR(10 g) = 5.62 mW/g
Maximum value of SAR (measured) = 13.3 mW/g

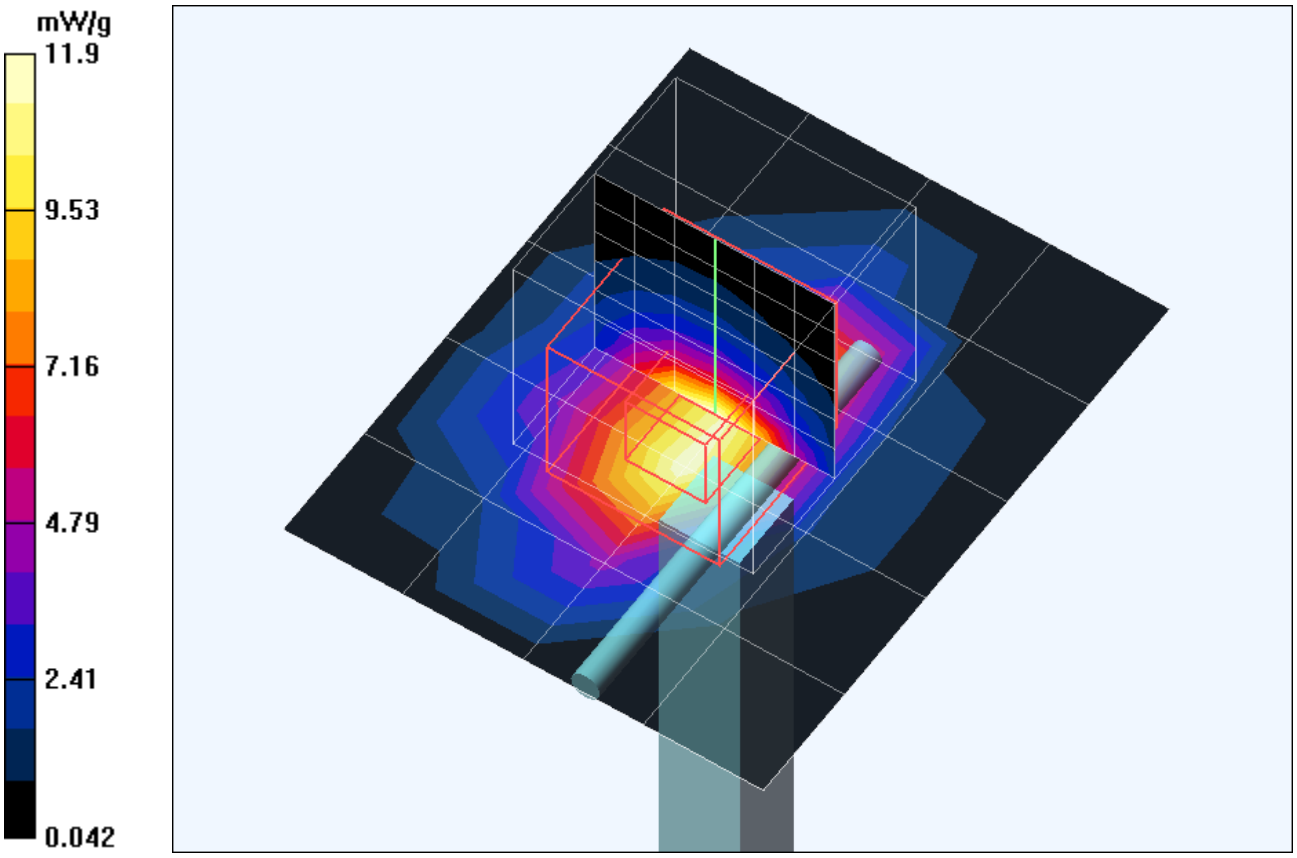

APPENDIX B : ADT SAR MEASUREMENT SYSTEM
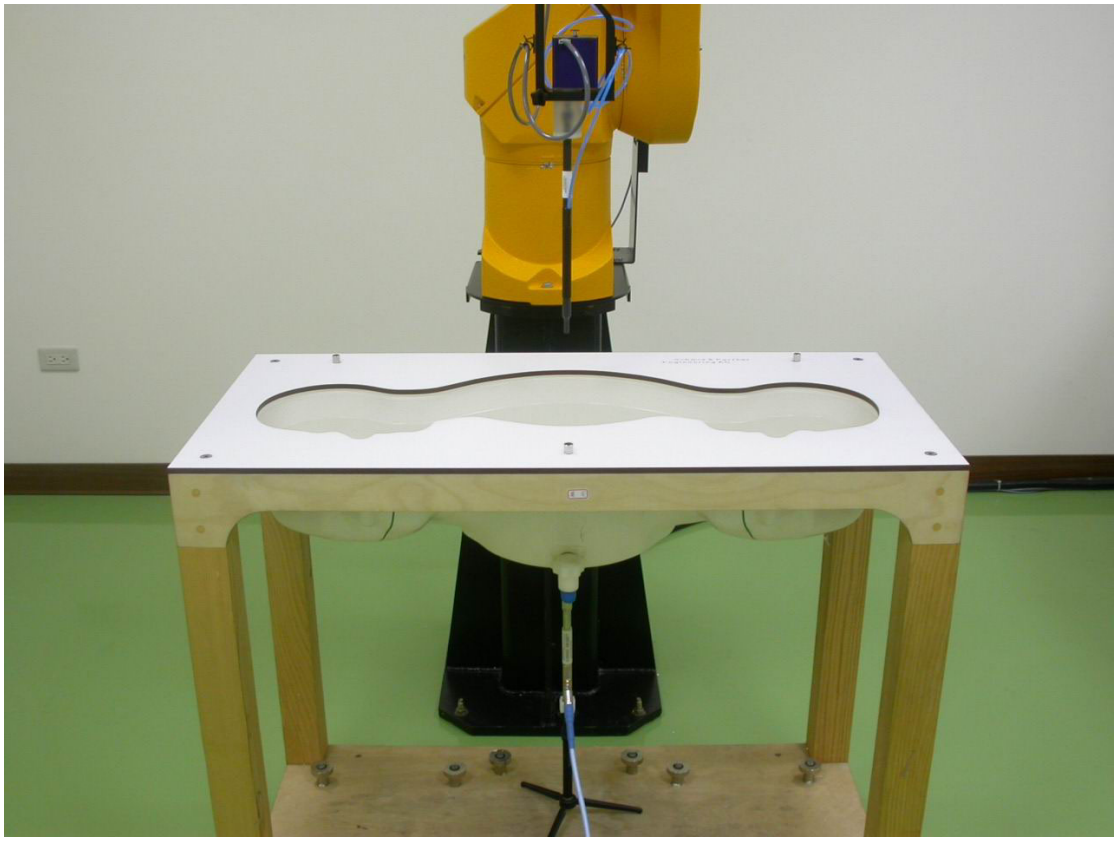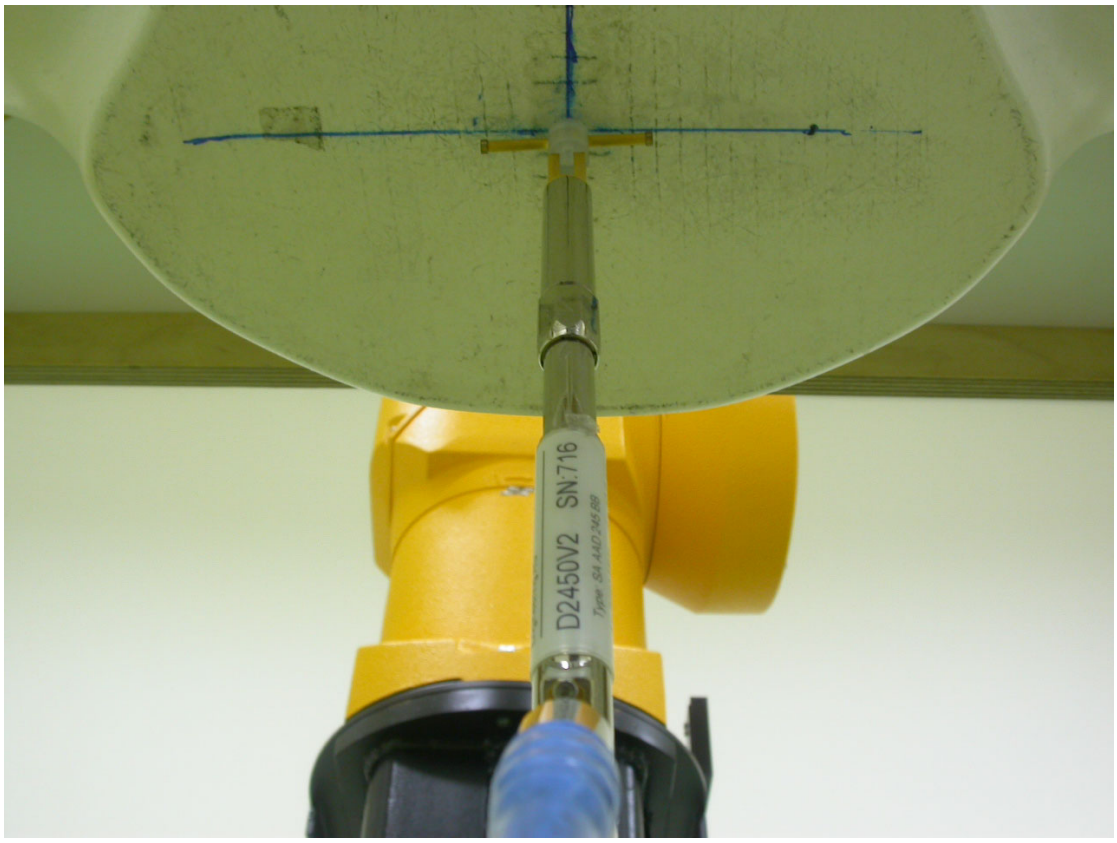
APPENDIX C: PHOTOGRAPHS OF SYSTEM VALIDATION