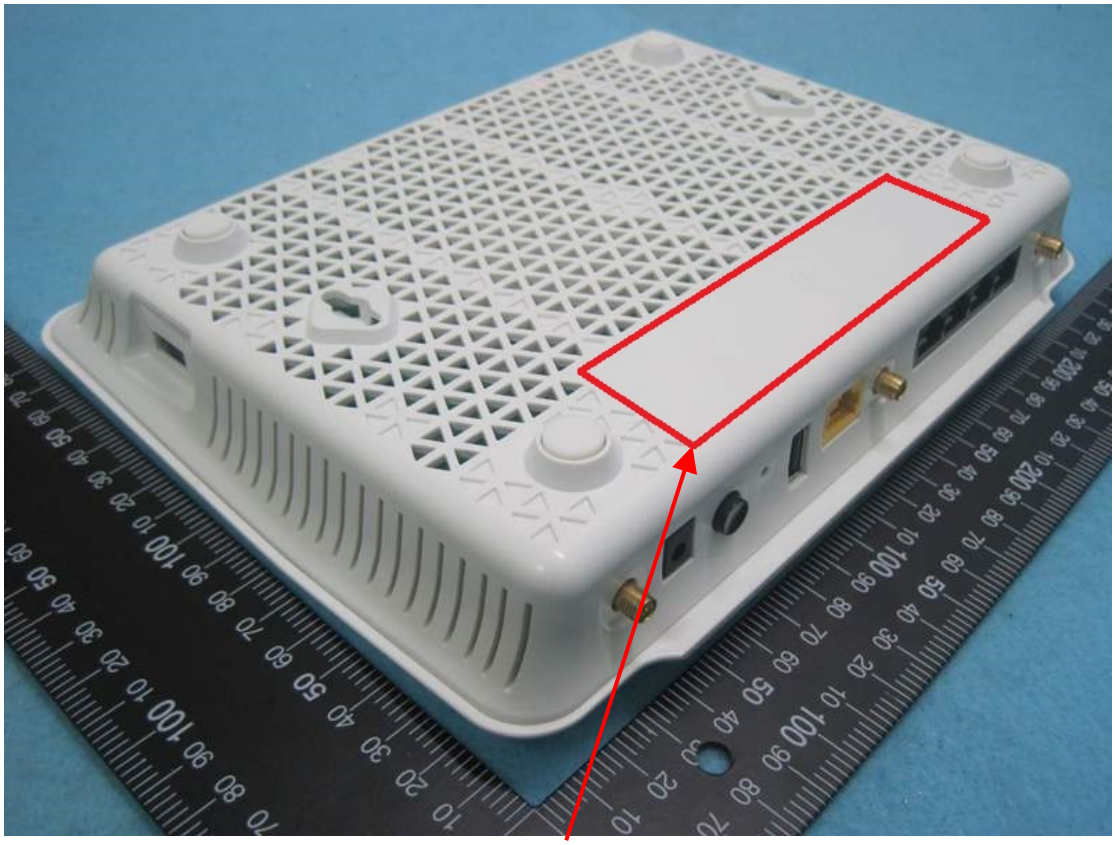

Label here

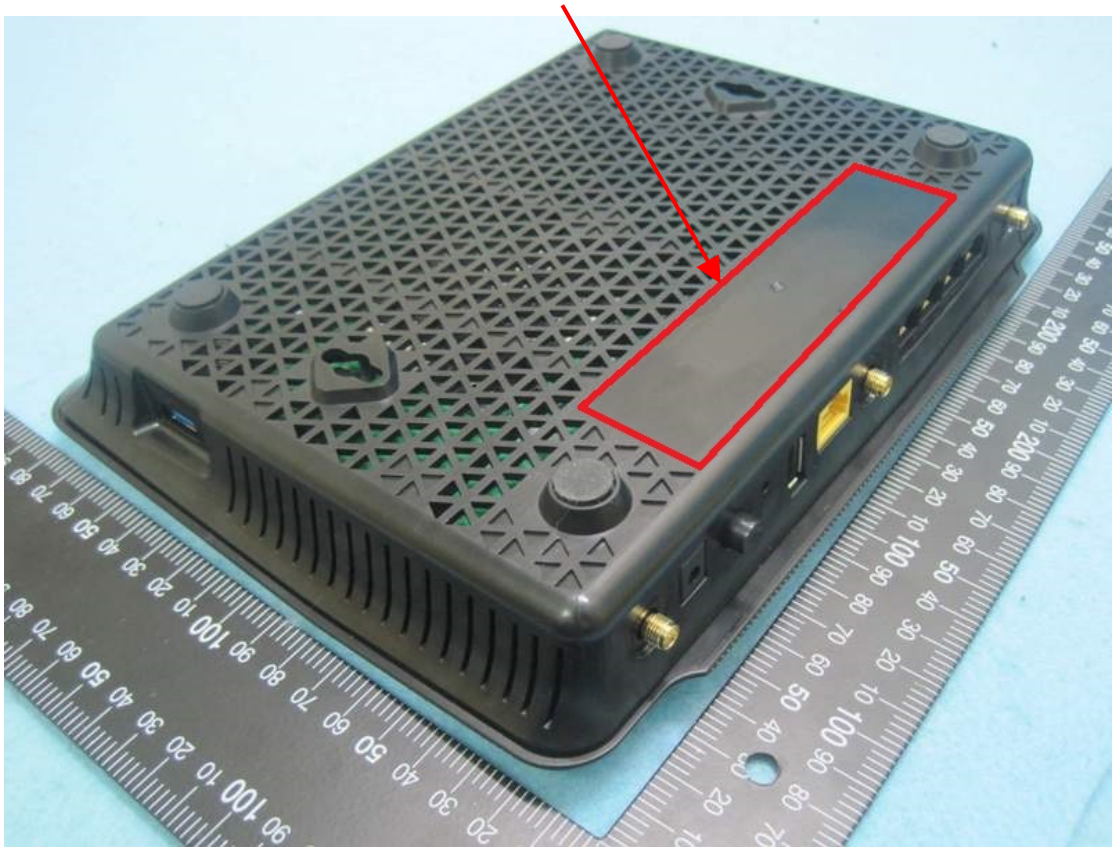

外印印刷稿
for printing

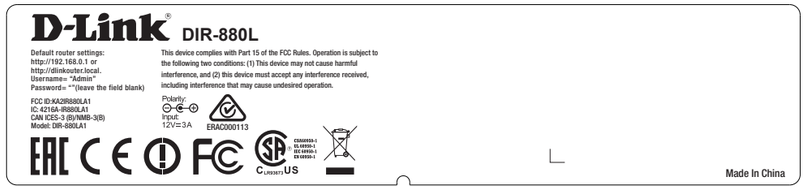

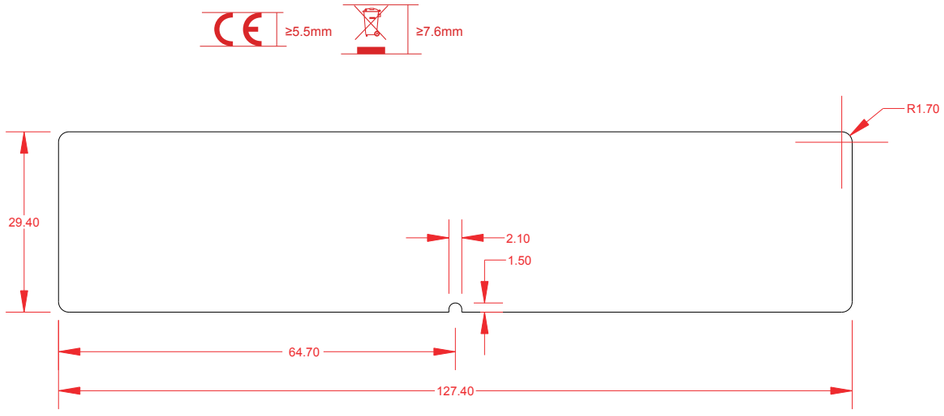

廠內碳打參考
for addtional printing

廠內打印進紙方向

ALPHA		Title: DIR-880L Device Label			
Drawn by: Ario Hsieh	Date: 2014/1/6	Material: 50μ白亮特多龍(PET) Glossy White Polyester Film	Part No.: 970000012566G	Rev.: 1.0	Task ID: 3674
Checked by: Jaylin Lin	Date: 2014/1/6	Coated: 25μ霧面特多龍(PET) Matte Clear Polyester Film	Unit: mm	Cutting and Printing Tolerance: ±0.15mm Contents Tolerance: ±0.15mm	
Approved by: Jaylin Lin	Date: 2014/1/6	Adhesive: 壓克力膠 Acrylic	Scale: 1:1	■ Modified drawing	☐Original drawing

Colors:

White	Background