DATEL®
INNOVATION and EXCELLENCE

A SERIES

Single Output
High-Reliability, 2" x 2"
14-20 Watt, DC/DC Converters

DATEL's new A-Series switching DC/DC converters are designed to meet the demanding long-term-reliability and low-cost requirements of modern telecom, datacom, computer/networking and industrial-electronics applications. These highly-efficient, rugged devices combine straightforward circuit topologies, new components, proven SMT-on-pcb construction methods, and highly repeatable automatic-assembly techniques. The design flexibility and assembly methods permit minor modifications to optimize performance for specific applications.

The single-output, 14-20 Watt Models of the A-Series deliver both high power densities and impressive MTBF's. Their superior durability is substantiated by a rigorous in-house qualification program including HALT (Highly Accelerated Life Testing), which is designed to detect any potential electrical, mechanical, or process weaknesses.

Packaged in standard, 2" x 2" x 0.45", shielded metal cases with non-conductive coatings, these fully isolated (1500Vdc minimum) DC/DC's offer excellent line/load regulation, full I/O protection, thermal shutdown, and industry-standard pinouts.

Output voltages include 3.3, 5, 5.2, 12 or 15 Volts. Input voltage ranges are DATEL's ultra-wide 9-36V and 18-75V, as well as 4.7-7.5V. Each device provides remote on/off control and V_{OUT} trim capability. All A-Series UWR models are fully EMI characterized and UL1950, CSA 950 and IEC 950 safety approved.

A-Series DC/DC's are extremely reliable, easy-to-use, cost-effective power converters. Use them to improve the reliability of existing equipment or to develop new systems that exceed design objectives.

Features

- Low cost! Highly reliable!
- Proven SMT-on-pcb construction
- Qual tested; HALT tested; EMC tested
- Designed to meet UL1950 and EN60950 (BASIC insulation)
- CE mark available (75V-input models)
- Output voltages: 3.3/5/5.2/12/15 Volts
- Ultra-wide input voltage ranges: 4.7-7.5V, 9-36V or 18-75V
- Small packages, 2" x 2" x 0.45"
- Industry-standard pinouts
- Fully isolated, 1500Vdc guaranteed
- Guaranteed efficiencies to 84%
- –40 to +100°C operating temperature
- Modifications and customs for OEM's

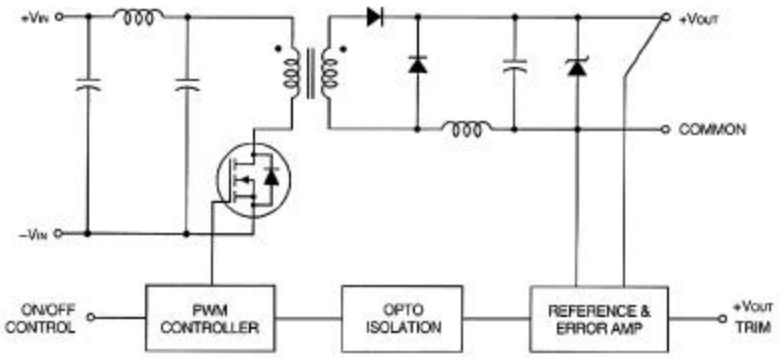

Figure 1. Simplified Schematic

A Series — 14-20W, SINGLE OUTPUT DC/DC CONVERTERS

Performance Specifications and Ordering Guide ①

Model	OUTPUT						INPUT			Efficiency		Package (Case, Pinout)
	V_{OUT} (Volts)	I_{OUT} (mA)	R/N [mVp-p] ②		Regulation (Max.)		V_{IN} Nom. (Volts)	Range (Volts)	I_{IN} ⑥ (mA)			
			Typ.	Max.	Line	Load ③				Min.	Typ.	
UWR-3.3/4250-D5A	3.3	4250	50	100	±1.0%	±1.0%	5	4.7-7.5	80/3720	76%	77%	C4, P6
UWR-3.3/4850-D12A	3.3	4850	50	75	±0.5%	±1.0%	24	9-36	35/852	77%	79%	C4, P6
UWR-3.3/4850-D48A	3.3	4850	50	100	±1.0%	±1.0%	48	18-75	15/419	79%	80%	C4, P6
UWR-5/3000-D5A	5	3000	50	100	±1.0%	±1.0%	5	4.7-7.5	80/3800	78%	79%	C4, P6
UWR-5/4000-D12A	5	4000	50	100	±0.3%	±0.5%	24	9-36	15/1020	81%	82%	C4, P6
UWR-5/4000-D48A	5	4000	50	100	±0.3%	±0.5%	48	18-75	15/496	82%	84%	C4, P6
UWR-5/4000-D48E ⑤	5	4000	50	100	±0.3%	±0.5%	48	36-75	15/484	84%	86%	C4, P6
UWR-5.2/3000-D5A	5.2	3000	50	100	±1.0%	±1.0%	5	4.7-7.5	80/3900	79%	80%	C4, P6
UWR-12/1250-D5A	12	1250	75	120	±1.0%	±1.0%	5	4.7-7.5	80/3660	80%	82%	C4, P6
UWR-12/1650-D12A	12	1650	50	100	±0.3%	±0.5%	24	9-36	15/1000	79.5%	82.5%	C4, P6
UWR-12/1650-D48A	12	1650	75	100	±0.3%	±0.5%	48	18-75	15/491	84%	85%	C4, P6
UWR-15/1000-D5A	15	1000	75	150	±1.0%	±1.0%	5	4.7-7.5	80/3650	80%	82%	C4, P6
UWR-15/1300-D12A	15	1300	50	100	±0.3%	±0.5%	24	9-36	20/967	84%	85%	C4, P6
UWR-15/1300-D48A	15	1300	75	100	±0.3%	±0.5%	48	18-75	10/484	84%	86%	C4, P6

① Typical at T_A = +25°C under nominal line voltage and full-load conditions, unless otherwise noted.
② Ripple/Noise (R/N) measured over a 20MHz bandwidth.
③ 10% to 100% load.
⑥ Nominal line voltage, no-load/full-load conditions.
⑤ See Technical Notes for an explanation of trading off input voltage ranges for higher full-power operating temperatures.

PART NUMBER STRUCTURE

U WR - 5 / 4000 - D12 A

- Output Configuration: U = Unipolar
- Wide Range Input
- Nominal Output Voltage: 3.3, 5, 5.2, 12 or 15 Volts
- Maximum Output Current in mA
- Input Voltage Range: D5 = 4.7-7.5 Volts (5V nominal); D12 = 9-36 Volts (24V nominal); D48 = 18/36-75 Volts (48V nominal)
- A-Series High Reliability

TEMPERATURE DERATING

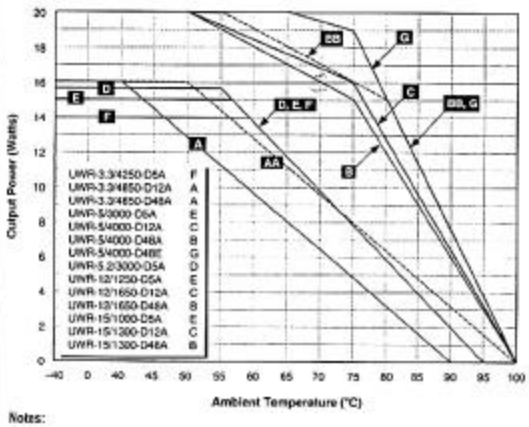

Notes:

1. UWR-3.3/4850-D48A (18-75V input, curve A) and UWR-3.3/4850-D12A (9-36V input, curve A) will derate along curve AA if used over the limited input ranges of 20-60V or 10-36V, respectively.
2. "D48A" models (18-75V input ranges) that derate along curve B will derate along curve BB if used over the more limited input range of 24-60V.

MECHANICAL SPECIFICATIONS

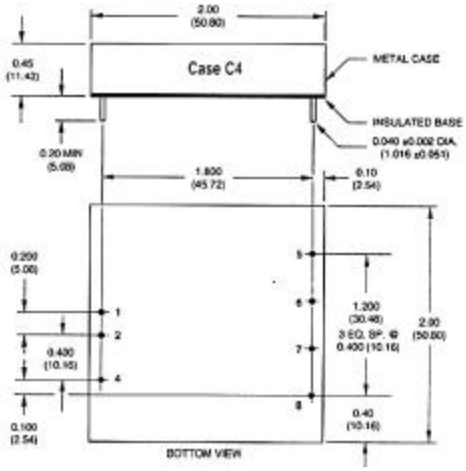

I/O Connections	
Pin	Function P6
1	+Input
2	–Input
3	No Pin
4	On/Off Control
5	No Pin
6	+Output
7	Common
8	Trim

Notes:

For "D5A" and "D12A" models, the case is connected to pin 2 (–V_{IN}).

For "D48A" and "D48E" models, the case is connected to pin 1 (+V_{IN}).

Performance/Functional Specifications

Typical @ T_A = +25°C under nominal line voltage and full-load conditions, unless noted. ①

INPUT	
Input Voltage Range:	
"D5A" Models	4.7-7.5 Volts (5V nominal)
"D12A" Models	9-36 Volts (24V nominal)
"D48A/D48E" Models	18/36-75 Volts (48V nominal)
Input Current	See Ordering Guide
Input Filter Type ②	Pi (C-type for "D5A" models)
Overvoltage Shutdown:	
"D5A" Models	10 Volts
"D12A" Models	40 Volts
"D48A" and "D48E" Models	80 Volts
Reverse-Polarity Protection	Yes (Instantaneous, 10A maximum)
On/Off (Sync) Control (Pin 4) ③	TTL high = off, low (or open) = on
OUTPUT	
V_{OUT} **Accuracy** (50% load)	±1%, maximum
Temperature Coefficient	±0.02% per °C
Ripple/Noise (20MHz BW) ②	See Ordering Guide
Line/Load Regulation	See Ordering Guide
Efficiency	See Ordering Guide
Isolation Voltage ④	1500Vdc, guaranteed
Isolation Capacitance	550pF
Current Limiting	Auto-recovery
Overvoltage Protection ⑤	Zener/transorb clamp, magnetic feedback
DYNAMIC CHARACTERISTICS	
Transient Response (50% load step)	200µsec max. to ±1.5% of final value
Switching Frequency	165kHz (±15kHz)
ENVIRONMENTAL	
Operating Temperature (Ambient):	
Without Derating	–40 to +40/50/55/65°C (Model dependent)
With Derating	to +100°C (See Derating Curves)
Storage Temperature	–40 to +105°C
PHYSICAL	
Dimensions	2" x 2" x 0.45" (51 x 51 x 11.4mm)
Shielding	5-sided
Case Connection:	
"D5A" and "D12A" Models	Pin 2 (–V_{IN})
"D48A" and "D48E" Models	Pin 1 (+V_{IN})
Case Material	Corrosion resistant steel with non-conductive, epoxy-based, black enamel finish and plastic baseplate
Pin Material	Brass, solder coated
Weight	2.7 ounces (76.5 grams)

① These converters require a minimum 10% loading to maintain specified regulation. Operation under no-load conditions will not damage these devices, however they may not meet all listed specifications.

② Application-specific input/output filtering can be recommended and perhaps added internally upon request. Contact DATEL Applications Engineering for details.

③ Applying a voltage to the Control pin when no input power is applied to the converter can cause permanent damage to the converter.

④ Devices can be screened or modified for higher guaranteed isolation voltages. Contact DATEL Applications Engineering for details.

⑤ Except for 3.3V outputs which have no protection.

ABSOLUTE MAXIMUM RATINGS	
Input Voltage:	
"D5A" Models	11 Volts
"D12A" Models	44 Volts
"D48A" and "D48E" Models	88 Volts
Input Reverse-Polarity Protection	Current must be <10A. Brief duration only. Fusing recommended.
Output Overvoltage Protection:	
3.3V Outputs	No protection
5V/5.2V Outputs	6.8 Volts, limited duration
12V Outputs	15 Volts, limited duration
15V Outputs	18 Volts, limited duration
Output Current	Current limited. Max. current and short-circuit duration are model dependent
Storage Temperature	–40 to +105°C
Lead Temperature (soldering, 10 sec.)	+300°C

These are stress ratings. Exposure of devices to any of these conditions may adversely affect long-term reliability. Proper operation under conditions other than those listed in the Performance/Functional Specifications Table is not implied.

TECHNICAL NOTES

Floating Outputs

Since these are isolated DC/DC converters, their outputs are "floating." Designers will usually use the output Common (pin 7) as the ground/return of the load circuit. You can, however, use the +Output (pin 6) as ground/return to effectively reverse the output polarity.

Filtering and Noise Reduction

All A-Series UWR 14-20 Watt DC/DC Converters achieve their rated ripple and noise specifications without the use of external input/output capacitors. In critical applications, input/output noise may be further reduced by installing electrolytic capacitors across the input terminals and/or low-ESR tantalum or electrolytic capacitors across the output terminals. The caps should be located as close to the power converters as possible. Typical values are listed below. In many applications, using values greater than those listed will yield better results.

To Reduce Input Ripple

"D5A" Models	47µF, 16V
"D12A" Models	20µF, 50V
"D48A" and "D48E" Models	20-50µF, 100V

To Reduce Output Ripple

3.3V Outputs	100µF, 6V, Low ESR
5V/5.2V Outputs	47µF, 10V, Low ESR
12/15V Outputs	22µF, 20V, Low ESR

In critical, space-sensitive applications, DATEL may be able to tailor the internal input/output filtering of these units to meet your specific requirements. Contact our Applications Engineering Group for additional details.

Input Fusing

Certain applications and/or safety agencies may require the installation of fuses at the inputs of power conversion components. Fuses should also be used if the possibility of sustained, non-current-limited, input-voltage polarity reversals exists. For DATEL A-Series UWR 14-20W DC/DC Converters, you should use slow-blow type fuses with values no greater than the following.

V_{IN} Range	Fuse Value
"D5A"	6A
"D12A"	4A
"D48A/D48E"	2A

On/Off Control

The On/Off Control pin (pin 4) may be used for remote on/off operation. A TTL logic high (+2 to +5 Volts, 250µA max.) applied to pin 4 disables the converter. A TTL logic low (0 to +0.8 Volts, 70µA max.), or no connection, enables the converter. Control voltages should be referenced to pin 2 (–Input). Applying a voltage to the Control pin when no input power is applied to the converter can cause permanent damage to the converter.

Synchronization

In critical applications employing multiple switching DC/DC converters, it may be desirable to intentionally synchronize the switching of selected converters (so the system noise can be reduced with notch filtering) or to purposely desynchronize the converters (to lessen the current-carrying requirements on intermediate dc buses). For multiple A-Series Converters, an external clock can be applied to pin 4 (Control) of each device. It should be a square wave with a maximum 1µsec "high" duration and an amplitude between +2V and +5V (see On/Off Control) referenced to pin 2 (–Input). The frequency of the synchronizing clock should be higher than that of any individual converter. Therefore, it should be 185kHz ±5kHz.

Output Trimming

V_{OUT} may be trimmed ±5% via a single external trimpot or fixed resistor. The trimpot should be connected as shown in Figure 2a with its wiper connected to pin 8 (Trim). A trimpot can be used to determine the value of a single fixed resistor which should be connected as shown in Figure 2b. Connect the resistor between pin 8 (Trim) and pin 6 (+Output) to trim "down" the output voltage. Connect the resistor between pins 8 and 7 (Common) to trim "up" the output voltage. Fixed resistors should be metal-film types with absolute TCR's less than 100ppm/°C to ensure stability.

Full-Power Operating Temperature Ranges

The UWR-5/4000-D48E did not originally exist as part of this product Family. It was created as a modified standard product, at customers' request, and subsequently added to the standard-product offering. This product demonstrates DATEL's ability and willingness to implement "tradeoffs" among the "width" of a given device's input voltage range, the device's output power, its efficiency, and its full-power operating temperature range.

More specifically, the UWR-5/4000-D48E was derived from the UWR-5/4000-D48A. The latter device was originally designed to have a 4-to-1 (18-to-75V) input voltage range. Its rated output power is 20 Watts (5 Volts at 4000mA), and its full-power operating temperature range, prior to derating, is –40 to +50°C. When customers told us they needed the full 20 Watts over a wider temperature range and were willing to sacrifice the 4-to-1 input, we quickly and easily delivered the UWR-5/4000-D48E (20W output power, full power to +65°C, 36-75V input).

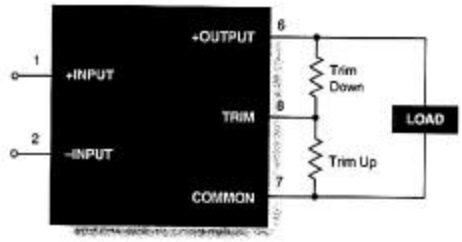

Figure 2a. Trim Connections Using a Trimpot

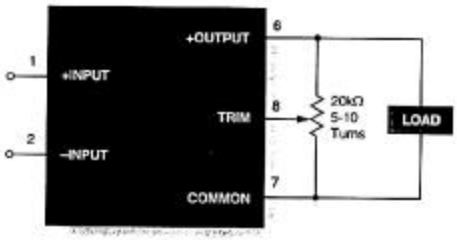

Figure 2b. Trim Connections Using Fixed Resistors

The freedom to limit the UWR-5/4000-D48A's 4-to-1 input voltage range to a 2-to-1 range (36-75V) enabled us to design a more efficient device capable of delivering full power at higher ambient temperatures. This was accomplished through minor modifications to the original circuit, and long-term reliability was not compromised because internal junction temperatures were not increased, thanks to the improved efficiency.

Please contact our Applications Engineering Group if you are considering similar tradeoffs for any of DATEL's standard DC/DC converters..

CUSTOM CAPABILITIES

DATEL's world-class design, development and manufacturing team stands ready to work with you to deliver the exact power converter you need for your demanding, large volume, OEM applications. And . . . we'll do it on time and within budget!

Our experienced applications and design staffs; quick-turn prototype capability; highly automated, SMT assembly facilities; and in-line SPC quality-control techniques combine to give us the unique ability to design and deliver any quantity of power converters to the highest standards of quality and reliability.

We have compiled a large library of DC/DC designs that are currently used in a variety of telecom, medical, computer, railway, aerospace and industrial applications. We may already have the converter you need.

Contact us. Our goal is to provide you the highest-quality, most cost-effective power converters available.

Typical Performance Curves (T_A = +25°C)

These curves were derived from test data for a single model (UWR-5/4000-D12A). Since all devices in the 14-20W UWR A-Series have the same circuit topology, the performance curves are representative of all devices.

LINE REGULATION

Output Voltage vs. Input Voltage and Output Current

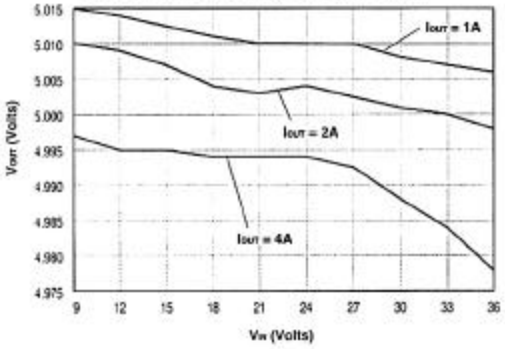

LOAD REGULATION

Output Voltage vs. Output Current and Input Voltage

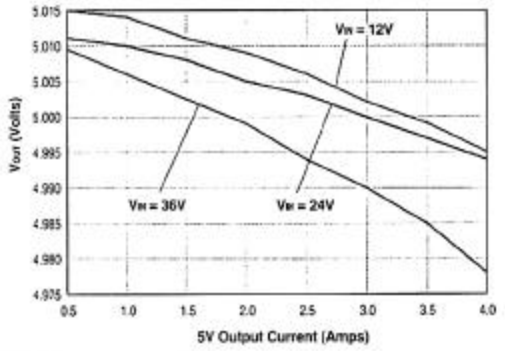

EFFICIENCY

Efficiency vs. Output Current and Input Voltage

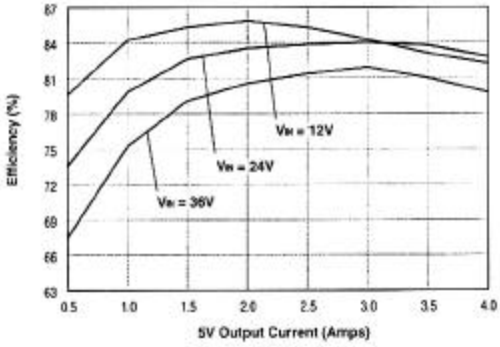

EMI RADIATED EMISSIONS

If you're designing with EMC in mind, please note that all of DATEL's UWR 14-20 Watt A-Series DC/DC Converters have been characterized for radiated and conducted emissions in our new EMI/EMC laboratory. Testing is conducted in an EMCO 5305 GTEM test cell utilizing EMCO automated EMC test software. Radiated emissions are tested to the limits of FCC Part 15, Class B and CISPR 22 (EN 55022), Class B. Correlation to other specifications can be supplied upon request. Radiated emissions plots to FCC and CISPR 22 for model UWR-5/4000-D12A appear below. Published EMC test reports are available for each model number. Contact DATEL's Applications Engineering Department for more details.

UWR-5/4000-D12A Radiated Emissions
FCC Part 15 Class B, 3 Meters
Converter Output = +5Vdc @ 3.6A

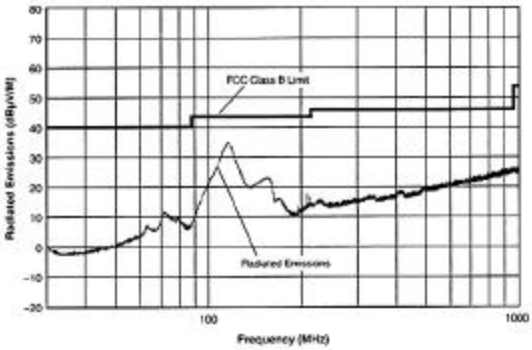

UWR-5/4000-D12A Radiated Emissions
EN 55022 Class B, 10 Meters
Converter Output = +5Vdc @ 3.6A

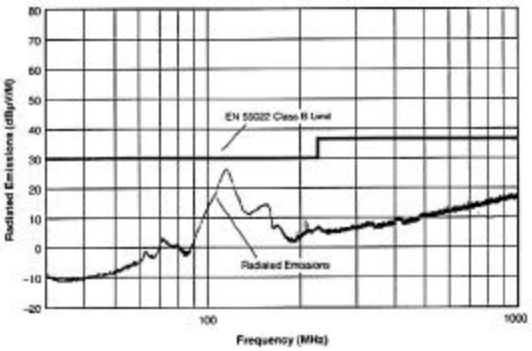

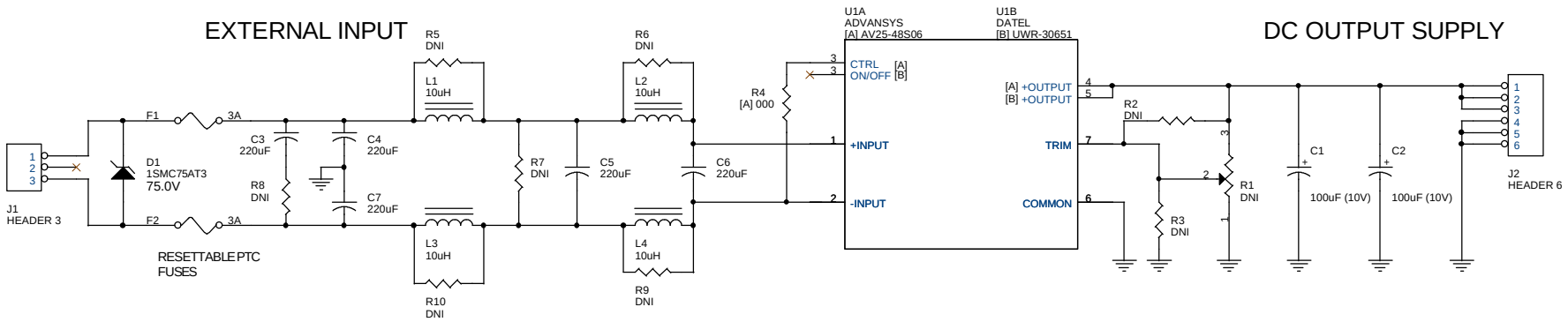

MOUNTING HOLES
(DIA. 0.160")

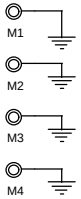

DEDICATED GROUND STRAP

NOTES:

1. SINGLE LAYER BOARD.
2. ONE STUFF OPTION, [A] OR [B], IS CHOSEN.
3. DC/DC CONVERTER IS MOUNTED ON BOTTOM IN ORDER TO HEAT SINK DEVICE TO CHASSIS FLOOR.
4. ALL DISCRETE PARTS ARE ON TOP SIDE AND SMT.

Fab Items
● PCB P/N-1200101

SOLECTEK

Solectek Corporation
6370 Nancy Ridge Drive, Suite 109
San Diego, CA 92122

Title: **SkyWay Advansys/Datel DC/DC Converter**

Size: **B** | Document Number: **1232400** | Rev: **X2**

Design Engineer(s): Jim Hiller

Date: Tuesday, December 07, 1999 | Sheet 1 of 1