SkyWay™ Series

High Speed/Long Range Wireless Bridge/Router

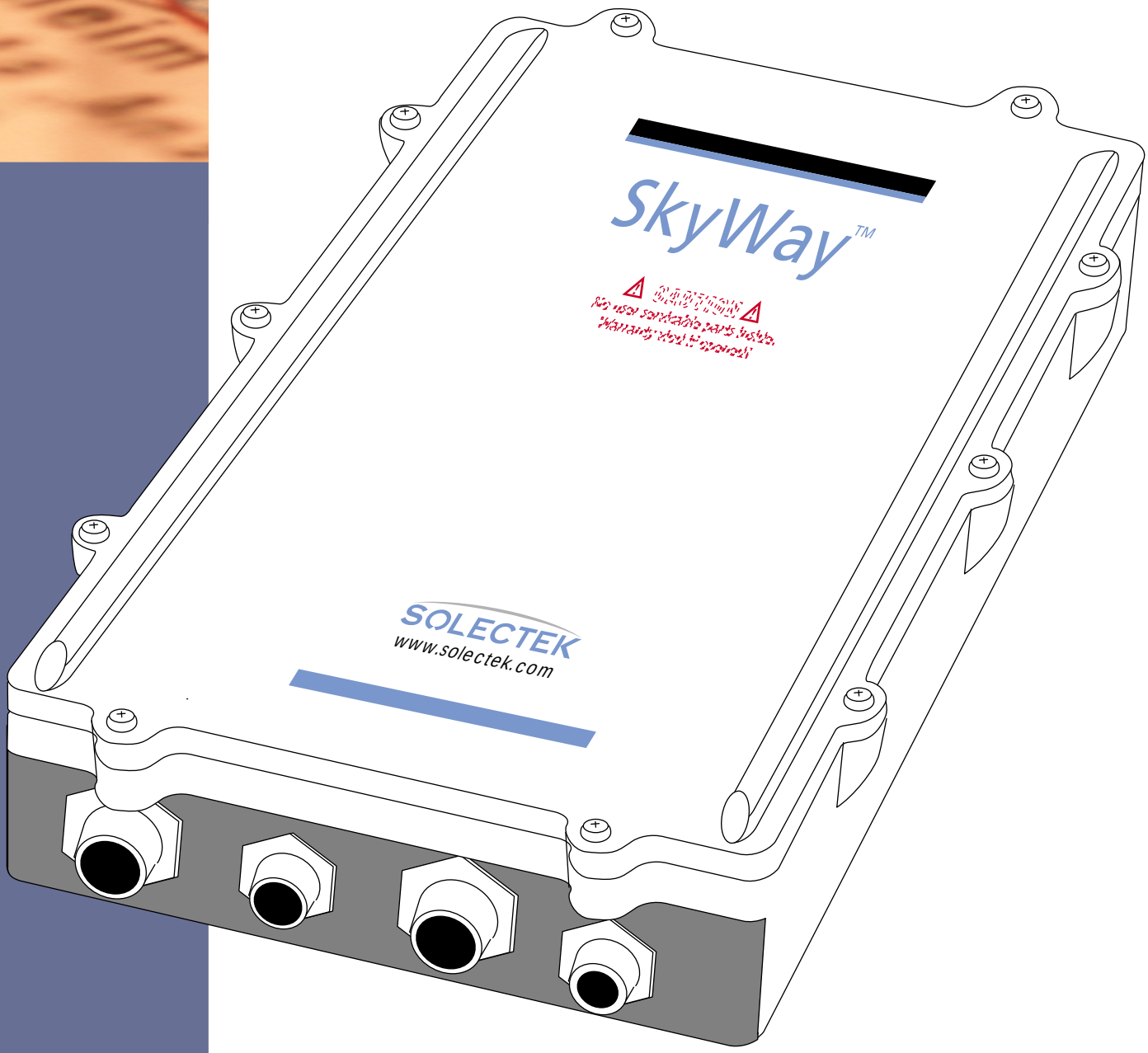

SOLECTEK CORPORATION
6370 Nancy Ridge Dr.
Suite 109
San Diego, CA 92121
858-450-1220
fax 858-457-2681

SOLECTEK

The Wireless Networking Company

www.solectek.com

© Copyright Solectek Corporation 2000

All rights reserved. Reproduction, adaptation, or translation without prior written permission is prohibited, except as allowed under the copyright laws.

Revision number 1.01

First edition, March 2000

Printed in USA

The information contained in this document is subject to change without notice.

Solectek Corporation makes no warranty of any kind with regard to this material, including, but not limited to, the implied warranties or merchantability and fitness for a particular purpose.

Solectek Corporation shall not be liable for errors contained herein or for incidental or consequential damage in connection with the furnishing, performance, or use of this material.

Regulatory Information

The SkyWay Series Wireless Bridge/Router operates in the 2.4 GHz band, complies with the IEEE 802.1D MAC bridging standard and supports SNMP monitoring if IP routing is enabled.

Federal Communications Commission (FCC) Radio Frequency Interference Statement

This device complies with Part 15 of FCC Rules. Operation of this device is subject to the following two conditions:

- It may not cause harmful interference.
- It must accept any interference that may cause undesired operation.

Information to the User

In order to comply with FCC RF exposure requirements, a minimum separation distance of 27 in. must be maintained between the antenna and any persons. When installing the antenna, ensure that this clearance is maintained while the product is in operation.

This device must be installed and used in strict accordance with the manufacturer's instructions. However, there is no guarantee that interference to radio communications will not occur in a particular commercial installation. In case the device does cause harmful interference with an authorized radio service, the user/operator shall promptly stop operating the device until harmful interference has been limited. Solectek Corporation is not responsible for any radio or television interference caused by unauthorized modification of this device or the substitution or attachment of connecting cables and equipment other than specified by Solectek Corporation. The correction of interference caused by such unauthorized modification, substitution, or attachment will be the responsibility of the user.

Steps for minimizing or eliminating radio and television interference:

- Change the channel
- Reorient the radio or TV receiving antenna.
- Relocate the computer and SkyWay Series Wireless Bridge/Router unit with respect to the receiver.
- Plug the computer and SkyWay Series Wireless Bridge/Router into a different outlet so the computer and bridge/router are on different branch circuits.

If necessary, consult the dealer or an experienced radio/TV technician for additional suggestions. You may find the booklet called "How to Identify and Resolve Radio-TV Interference Problems" prepared by the Federal Communications Commission helpful. The booklet is available from the U.S. Government Printing Office, Washington, D.C., 20402, as stock number 004-000-00345-4.

This product was FCC certified under test conditions that included the use of shielded I/O cables and connectors between system components. To be in compliance with FCC regulations, the user must use shielded cables and connectors and install them properly.

Point-to-Point (CFR 15.247 b)

Solectek ensures that its intentional radiators that operate in the ISM band (2.4 GHz) and that are configured with directional antennas for point-to-point use will always comply with FCC transmitter power mandates.

This transmitter output power control does not diminish user's or installer's responsibility to ensure that the point-to-point system is used in the manner prescribed by the Code of Federal Regulations. This directive forbids and excludes the use of point-to-multipoint systems and omni-directional applications as well as multiple co-located intentional radiators.

Radio Transmission Notice

This product is a low power (less than 1 Watt), direct-sequence, spread-spectrum radio system pre-set to transmit and receive signals in the 2.4-2.4835 GHz frequency band. This product has been certified by the U.S. Federal Communications Commission for use in the United States of America in that band. The manufacturer makes no representation as to the availability of the above-mentioned frequency band for such use in other countries.

Any prospective user of this product outside the United States of America should, prior to such use, contact the government department or other agency responsible for assigning radio frequencies in the country in which use is proposed to determine whether such department or agency has any objection to operation of the product in the 2.4-2.4835 GHz band, and whether there are any other local devices generating signals in that band which might be expected to interfere with the operation of this product.

The manufacturer shall not be responsible for any operation of this product which is in violation of local law, creates interference harmful to other local devices, or results in a malfunction of this product caused by outside interference.

End User License Agreement

Notice: Read below before installing and using this device. Installing and using this device indicates your acceptance of these terms and conditions. If you do not accept the terms, you must return the unused device and all related software immediately.

You may not use, copy, modify, or transfer the enclosed device, related documentation, or any software programs residing in or included with the device (collectively, the "product"), except as expressly provided in this license.

License. The technology and intellectual property embodied in the Product (the "Technology") are licensed, not sold, to you. You have a nonexclusive and nontransferable right only to connect the Product to and to use the Technology with a single license control utility. You may not modify or make inoperable authorization keys or license control utilities. You may not transfer, sublicense or assign a license to the Product or the Technology to another party except in accordance with Solectek's Product License Transfer Policy in effect at the time of such license grant.

You understand that the Technology belongs to Solectek or its third party licensors (collectively, "Solectek"), and they have the right to enforce this license. You agree to keep confidential and use your best efforts to prevent and protect the contents of the Technology from unauthorized disclosure or use. Solectek reserves all rights not expressly granted to you.

Limitations on use. You may not disclose or make available the Product or the Technology to any other party or permit others to use it except your employees and agents who use it on your behalf and who have agreed to these license terms. You may not do any of the following with or to the Product or the Technology: (a) make copies (except for backup or archival copies); (b) rent, lease or distribute copies; (c) make any alteration, modification, translation or the like without the prior written consent of Solectek; or (d) reverse engineer, reverse assemble, reverse compile or otherwise engage in similar manipulation. Any full or partial copy of the Product must include all copyright and other proprietary notices which appear on or in the Product.

You must maintain adequate records to be able to control use of the Product and the Technology according to these license terms. These records must match the use of the Product and the Technology to the license grants. Solectek may require you to make these records available to Solectek or the third party developer or owner of the applicable portion of the Product.

The term "authorization key" includes any unique series of data elements that is to be installed and enabled in a license control utility to allow use of the Product. Authorization keys may be installed and enabled for use in only one license control utility at any one time. Authorization keys are non-transferable and confidential and must be destroyed on termination of this license. Unless otherwise specified, you may print electronic Product documentation as reasonably necessary to exercise your right to use the Product.

Terms and Limitations. This license is effective until terminated. You may terminate this license at any time by returning the Product to Solectek. This license automatically terminates if you fail to comply with its terms and conditions. You agree that upon such termination you will return the Product to Solectek, together with any other material you have received from Solectek in connection with the Product.

U.S. governing law and export restrictions. This license will be governed by the laws (other than choice of law principles) of the State of California, and in no event will it be governed by the U.N. convention of the international sale of goods. You acknowledge that the laws and regulations of the United States restrict the export and re-export of the Product and any related technical data. You agree that you will not export or re-export the Product or any related technical data in any form without first obtaining the appropriate United States and foreign government approval.

U.S. Government Restricted Rights Legend

The Product is provided with Restricted Rights. Use, duplication, reproduction or disclosure by the Government is subject to restrictions in subdivision (c)(1)(ii) of the Rights in Technical Data and Computer Product clause at 252.227-7013 and in subparagraphs (a) through (d) of the Commercial Product-Restricted Rights Clause at 52.227-19. Contractor/Manufacturer is Solectek, 6370 Nancy Ridge Drive, Suite 109, San Diego, California.

Introduction

The products and software programs described in this Users' Guide are licensed products of SOLECTEK and are fully copyrighted. The information within this Operator's Guide is proprietary and also is copyrighted.

Information in this Operator's Guide is subject to change without notice. While every precaution has been taken in the preparation of this Guide, SOLECTEK assumes no responsibility for inaccuracies. The Operator's Guide may not be reproduced or transmitted in any form or by any means, electronic or mechanical, including photocopying, recording, or information retrieval systems, for any purpose other than the purchaser's personal use, without the expressed, written permission of SOLECTEK.

It is the policy of SOLECTEK to improve its products as new technology, components, software, and firmware become available. SOLECTEK Corporation, therefore, reserves the right to change specifications without prior notice. Furthermore, all features, functions, and operations described herein may not be marketed by SOLECTEK in all parts of the world.

SOLECTEK is the name and trademark of SOLECTEK Corporation. SkyWay is a trademark of SOLECTEK Corporation.

SOLECTEK does not warrant that the hardware and software of its product will function as intended in every environment and application, and makes no warranty and representation, either implied or expressed, with respect to the quality, performance, merchantability, or fitness for every purpose.

Other trademarks:

IBM and AT are registered trademarks of International Business Machines Corporation. Microsoft and MS-DOS are registered trademarks of Microsoft Corporation. Novell and NetWare are registered trademarks of Novell, Inc. Other trademarks are the property of their respective holders.

Copyright January 2000 SOLECTEK Corporation, San Diego, California, U.S.A.

All Rights Reserved. Printed in the U.S.A.

Tel: (858)450-1220

Web Site: www.solectek.com

Part Number:

Contact Information

If the information in this Users' Guide does not answer your questions, please contact SOLECTEK Corporation's Technical Support Department. Our friendly and knowledgeable Technical Support staff is available to answer your questions Monday through friday, 8:00 a.m. to 5:00 p.m., Pacific Time. If you prefer, you can submit questions to our 24-hour fax number or by e-mail.

Voice support:	(858)450-1220
24-hour fax number:	(858)457-2681
E-mail address:	support@solectek.com

To handle your call as quickly and effectively as possible, please have the following information ready before you call.

- The model you are using (SkyWay Bridge/Router).
- The type of Ethernet connection your SkyWay Bridge/Router has (10BaseT or 100BaseF).
- The network to which you are connected (for example, Novell NetWare, version *xx*).
- The application you were using when you encountered the problem (for example, Word for Windows, version 7.0).
- Any symptoms or error codes that accompanied the problem (for example, activities were suspended or a "123ABC" error code appeared.).
- The results of the most recent bench test (see Chapter 3).

Warranty

One Year Limited Warranty

Subject to the conditions and procedures set forth below during the warranty period, Solectek will repair or replace, at Solectek's option, such Solectek products or parts thereof which, on inspection by Solectek, are found to be covered by the limited warranties set forth below. The warranty period for new hardware products, which are listed on Solectek's MSRP Price List at time of purchase, is twelve months from the date of shipment from Solectek. The warranty period for spare parts and R- part numbers is ninety days from the date of shipment from Solectek. If you think there is a problem or defect with your Solectek product:

- Contact Solectek's Technical Support Department between 8:00 a.m. and 5:00 p.m., Pacific Time at (858) 450-1220, or via fax at (858) 457-2681, or via e-mail at support@solectek.com. The Solectek Technical Support Representative will discuss your problem to confirm the defect. After business hours, please leave a voicemail or send an e-mail or fax. A Technical Support Representative will respond to you the next business day.
- If warranty or return service is needed, you will receive a Return Material Authorization (RMA) number. At no time should Solectek products be sent back without a valid RMA number. Solectek accepts no responsibility for unauthorized returns.

You agree to pay for shipping to Solectek. If the product is under warranty, Solectek will pay for shipping of the repaired or replacement product to you via ground transportation to your location in the United States. For installations outside the continental U.S., Solectek will pay for shipping via ground transportation to the freight forwarder of your choice located in the continental United States. Any other freight arrangements will be at customer expense.

Solectek shall not be liable for any damage caused to the product in transit. You acknowledge and agree you will bear all risk of loss or damage to the product while in transit.

Send return shipments to:

Solectek Corporation

6370 Nancy Ridge Drive, Suite 109

San Diego, CA 92121-3212

ATTN: RMA # _____

- Pack products securely, to prevent damage in transit. Be sure the RMA number is clearly visible on the outside of the return shipping carton.
- Returned Solectek products must include all other components from the original package, including the hardware, cables, connectors, software diskettes, and user manual(s) unless otherwise stipulated by Solectek.
- Enclose a copy of the original purchaser's proof of purchase, if needed to support warranty claim. (See details in LIMITATIONS section below.)

After inspecting the failed unit, Solectek will repair or replace materially defective parts or components. All products that are replaced become the property of Solectek. If upon inspection by Solectek, a unit returned under warranty is deemed to be damaged or out of warranty for any reason, (see LIMITATIONS section below), Solectek will contact the customer with a price for the repair or replacement unit. Upon receipt of payment (wire transfer, certified check, credit card, etc.) for the replacement unit plus outbound shipping fees, Solectek will send a repaired or replacement unit to the customer. Customers who do not accept the repair offer may receive their failed equipment back by prepaying an inspection fee of $300 and the return freight cost.

If upon inspection by Solectek, a unit returned under warranty is found to be defect free, Solectek reserves the right to charge the customer a $500 test fee.

SOLECTEK'S SOLE AND EXCLUSIVE OBLIGATION, AND YOUR SOLE AND EXCLUSIVE REMEDY, UNDER THIS LIMITED WARRANTY SHALL BE THE REPAIR OR REPLACEMENT OF THE APPLICABLE SOLECTEK PRODUCT IN ACCORDANCE WITH THE TERMS SET FORTH HEREIN.

LIMITATIONS

As the original purchaser, you receive these warranties from Solectek Corporation, subject to the terms and limitations set forth below.

Solectek warrants that your Solectek products will be free from defects in material and workmanship and will perform in substantial compliance with the operator's guide(s) accompanying Solectek products. Warranty is given for twelve (12) months from the date of product shipment from Solectek for new hardware products and ninety (90) days for spare parts and R- part numbers. Solectek will honor this warranty upon receiving proof of purchase. "Proof of purchase" is a copy of the original sales transaction, showing complete name and address of seller, complete name and address of purchaser, date of purchase, model number, and serial number.

Solectek does not cover or accept liability for any injury, damage or failure caused by misuse, misapplication, abuse, acts of nature, accidents (e.g., dropping the Solectek products or software diskettes), electrical mishaps, causes beyond our control, or claims by other than the original purchaser.

Solectek will not honor, and will consider this limited warranty voided, if, in Solectek's reasonable judgment, there has been any (1) tampering with the Solectek product's external label or serial number, (2) attempt to open the Solectek product's case without prior written consent from Solectek, (3) attempted or actual repair by anyone other than an authorized Solectek technician, (4) installation or use with any power supply component(s) other than the original Solectek power supply components provided in the product package, (5) for installations within the U.S., installation or use with any cables or antenna(s) other than original Solectek products, (6) installation or use in environmental conditions that are outside Solectek's published environmental specifications (including but not limited to temperature range, humidity, cable lengths, proximity to other devices, etc.).

This warranty is available only to the initial end user purchaser of the product and is not transferable. This warranty is applicable only to products purchased using Solectek's

MSRP Price List. Warranty is void if a Solectek product is installed at a destination other than the stated destination at time of purchase.

DISCLAIMER OF WARRANTIES

EXCEPT AS EXPRESSLY SET FORTH HEREIN, SOLECTEK HEREBY EXPRESSLY DISCLAIMS ANY AND ALL WARRANTIES, EXPRESS OR IMPLIED, INCLUDING WITHOUT LIMITATION THE IMPLIED WARRANTIES OF MERCHANTABILITY OR FITNESS FOR A PARTICULAR USE.

WAIVER OF CONSEQUENTIAL DAMAGES

SOLECTEK HEREBY DISCLAIMS ANY AND ALL SPECIAL, INDIRECT, OR CONSEQUENTIAL DAMAGES (INCLUDING WITHOUT LIMITATION, LOST PROFITS, LOSS OF OR DAMAGE TO ANY OTHER COMPUTER EQUIPMENT OR RELATED DATA) WHICH MAY RESULT FROM BREACH OF ANY WARRANTY, OR ARISING OUT OF THE USE OR INABILITY TO USE ANY SOLECTEK PRODUCT, EVEN IF SOLECTEK HAS BEEN ADVISED OF THE POSSIBILITY OF SUCH DAMAGES.

Table of Contents

Regulatory Information: i

Federal Communications Commission (FCC) Radio Frequency Interference Statement i

Information to the User i

Radio Transmission Notice ii

End User License Agreement ii

U.S. Government Restricted Rights Legend iv

Introduction v

Contact Information vi

Warranty vii

One Year Limited Warranty vii

LIMITATIONS viii

DISCLAIMER OF WARRANTIES ix

WAIVER OF CONSEQUENTIAL DAMAGES ix

Chapter 1: Introducing Skyway 1

Intended Audience 2

Using this Guide 3

Conventions, warnings 5

Menu and Command Names 5

Typed Text 5

Notes 5

Warnings.....5

Hyperjumps 5

How to Proceed 6

Chapter 2: Getting to Know the SkyWay Bridge/Router 7

General Description 8

Product Features 9

Contents of the SkyWay Package 10

Component Identification 11

Specifications..... 12

Understanding the Menu Structure..... 13

SOLECTEK

Navigating Through Menus and Screens **13**

Dot Commands **14**

How Screens Display Information **15**

Editing Fields **15**
Field Types 15

Saving Configuration Changes **16**

Understanding the Configuration Database **16**

Changes that Require Cycling or Resetting **16**
Resetting the Unit 16

Bios Application **18**

Bios Main Menu **18**
Bios Main Menu 18
Bios Configuration Menu 19
Bios System Configuration 20
Configuration Database Service 21

Accessing the SkyWay Bridge/Router **22**
Modem Settings for Dial-up Connection 22

Configuring the Serial Port and Serial Transceiver **23**
1.2.1.1 Serial Port Configuration 24
1.2.1.2 Serial Transceiver Configuration 25

Chapter 3: Preparing for Installation **27**

Before Installing **28**

Safety Considerations **29**

General Safety Guidelines **29**

Electrical Safety Guidelines **29**

Pre-installation Procedures **30**

SOLECTEK

Site Considerations **30**
Step One: Assess Your Network Requirements 30
Step Two: Map Wireless Network Pre-Design 30
Step Three: Perform a Site Survey 31
Step Four: Finalize the Design 31

Bench Test **32**

Minimum Configuration Settings and Factory Defaults for Bench Test **32**

Performing the Bench Test **33**

Chapter 4: Installing Skyway **41**

Mounting the SkyWay Unit **42**

Mounting to a Mast **42**

Mounting to a Wall **44**

Setting Up the Antenna **45**

Selecting the Antenna **45**

Before You Mount the Antenna **45**

Mounting the Antenna **46**

Grounding Skyway and the Antenna **47**

Connecting Cabling **48**

Routing Connected Cables **48**

Connecting an Antenna **49**

Connecting to Power **50**

Connecting to the Administration Console **51**

Connecting to Your LAN **53**

Antenna Alignment and RF Link Verification ... 55

Chapter 5:
Configuring and Managing SkyWay 57

Configuring SkyWay 58

Configuration Features Available 58

Setting System Configuration Parameters 59

Setting Network Management Security Parameters.....59
1.1.1 Network Management Security Configuration..... 59

Setting Network Management System Parameters 61
1.1.2 Network Management System Configuration 61

Adding Users and Setting Access Levels.....62
1.1.3.1 Add a User 62

Displaying a List of Users 63
1.1.3.2 Users..... 63

Setting the System Date and Time 64
1.1.4 General Parameters Configuration 64

Understanding RF-DLC..... 65

The RF-DLC Protocol.....65

Automatic Discovery Protocol.....65
Enabling ADP 65
Disabling ADP 66
ADP Discovery Process 66

RF-DLC Frame Types.....67
RF-DLC Commands and Responses..... 67

Polling 67
Error Detection and Recovery..... 68

Configuring the Ports 69

Before you Begin 69

Obtaining IP Addresses.....69

Setting up IP Addresses.....69

Configuring the SkyWay as a Base Station 69
1.2.3.3 RF Transceiver Configuration 72
RF Diagnostics Port..... 73
1.2.3.2 RF Diagnostic Port Configuration 73
1.2.3.1.1 RF Base Port Configuration 74

Configuring the SkyWay as a Sub Station.....77
1.2.3.1.2 RF Sub Port Configuration 78
Configuring the Base Sub Ports 80

Validating Accept Status of a Sub Station 81
1.2.3.1.4 ADP Substation Configuration 81

Configuring the Ethernet Port.....83
1.2.2.1 Ethernet Port Configuration 83

Configuring the Ethernet Transceiver.....85
1.2.2.2 Ethernet Transceiver Configuration 85

Bridging 88

Enabling and Disabling Bridging 88
Port States..... 88

Spanning Tree 89
1.3.1 Bridge Configuration..... 90
1.3.2 Bridge Port Configuration..... 92

IP Routing..... 93

Configuring IP.....93
1.4.1 IP Protocol Configuration 93

Configuring the IP Ports 95
1.4.2 IP Port Configuration 95

Setting up Static Routing.....97
1.4.3 IP Static Routes Configuration 97

BOOTP **98**

Obtaining a Configuration Summary **99**
1.5 Configuration Summary 100

Internet Control Message Protocol **102**

SNMP **103**

SNMP Features Available **103**

Diagnostics **104**

BIOS Diagnostics **104**

RunTime Diagnostics **104**
4.1 RF Base Radio Test 105
4.2 RF Sub Radio Test 107

Ping Utility **108**
3.2 Ping Utility 109

File Directory **111**
3.1.4 File Directory 111

File Transfer Utilities **112**

Xmodem **112**

YModem **113**
3.1.2 YModem 114

Uploading a New Software Version **115**

Trivial File Transfer Protocol **116**
TFTP Clients and Server 117
Sending and Receiving Files 117
File Definitions 118
TFTP Status 119
Configuring the TFTP Server on SkyWay 119

3.1.1.2 TFTP File Transfer **121**

Security 123

Multi-level Password Security 123

SNMP Security.....123

Chapter 6: Monitoring SkyWay..... 125

Monitoring Features Available..... 126

System Status and Control Screens 127

Taking a System Snap Shot 127
2.1.1 General Status and Control 127

Checking SNMP Status and Trap History 128
2.1.2.1 SNMP Status 128
2.1.2.2 SNMP Trap History 129

Checking the Error Log.....130

Port Status and Control Screens 132

Checking the Serial Port Status 132
2.2.2 Serial Port Status..... 132

Checking the Ethernet Port Status.....134
2.2.3.1 Ethernet Port Status 134
2.2.3.2 Ethernet Transceiver Status..... 136

Checking the RF Port.....137
2.2.4 RF Port Status 137

RF-DLC Screens 140

Checking RF-DLC Base Port Status 140
2.5.1 RF-DLC Base Port Status..... 140

Checking the Sub Port Status 143
2.5.2 RF-DLC Sub Port Status 143

Checking the Polling Status.....146

2.5.3 RF-DLC Sub Poll Status 146

Checking the RF Signal Status.....147
2.5.4 RF Signal Status 147

Bridging Screens 149

Checking Bridge and Spanning Tree Status 149
2.3.1 Bridge and Spanning Tree Status 149

Checking Bridge Port Status 152
2.3.2 Bridge Port Status 152

Checking Spanning Tree Port Status.....154
2.3.3 Spanning Tree Port Status..... 154

Transparent Bridging Table.....156
2.3.4 Transparent Bridging Table 156

IP Routing Screens 157

Checking IP Routing Status 157
2.4.1.1 IP Protocol Status 157
2.4.1.2 IP Address Table 160

Checking ICMP Activity 161
2.4.1.4 ICMP Status 161

Checking the Address Resolution Protocol Table 163
2.4.1.5 ARP Table 163

Base Station States 164

Sub Station States 166

Status Summary 168

Checking the Status Summary 168
2.6 Status Summary 168

Chapter 7: Troubleshooting Skyway 171

Symptom/Action Flowchart 172

Before You Call Solectek Tech Support..... 173

Detailed description of the problem..... 173
2.1.1 General Status and Control Information..... 173
Network Configuration 174
RF Network Configuration 174
Logical Network Map 174
Bench Test Results..... 174

Appendix A: Run-time Menu Tree 175

Appendix B: BIOS Menu Tree Summary Table..... 179

Appendix C: Interface Specifications and Pinouts..... 181

DC Power Cable (Female DC Jack)..... 182

Console Cable (Serial RS-422: DB9)..... 183

10 Base-T/100 Base-TX (Ethernet Cable: RJ-45) 184

SOLECTEK

Appendix D:
Detailed Product Specifications 185

Appendix E:
Supported Protocols 187

Bridged Protocols.....187

Routed Protocols.....187

Management Protocols.....187

Appendix F:
Error Codes 189

Appendix G:
SNMP Trap Messages..... 191

Appendix H:
Installation Recording Form..... 193

Appendix I:
Sources of SNMP Management Software 195

Appendix J: Glossary and Basic Concepts 197

Basic Concepts 198

Units of Measure 201

Connection Types 203

Antennas 204

Protocols 208

Equipment 209

Site Survey 210

Appendix K: Skyway Antennas 213

7002301: 6 dBi Omni Directional Antenna..... 214

Specifications.....214

Wall Mount 215

Mast Mount 215

7002401: 11 dBi Omni Directional Antenna... 216

Specifications.....216

Wall Mount 217

Mast Mount 217

7002501: 16 dBi Outdoor Flat Panel Directional

Antenna 218

Specifications 218

Wall Mount 219

Mast Mount 219

7002601: 17 dBi Outdoor Flat Panel Directional Antenna 220

Specifications 220

Wall Mount 221

Mast Mount 221

7002701: 22 dBi Outdoor High gain Flat Panel Directional Antenna 222

Specifications 222

Wall Mount 223

Mast Mount 223

7002801: 8 dBi Indoor/Outdoor Patch Antenna .. 224

Specifications 224

Wall Mount 225

Mast Mount 225

7002901: 12 dBi 110 ° Outdoor Sectorial Antenna 226

Specifications 226

Wall Mount 227

Mast Mount 227

Index 229

Chapter 1: Introducing Skyway

This User's Guide helps you install, configure, and manage the SkyWay Wireless Bridge/Router. This Guide also covers selected SkyWay Bridge/Router maintenance and troubleshooting procedures.

This chapter includes the following information:

Intended Audience..... 2

Using this Guide 3

Conventions, warnings 5

How to Proceed..... 6

Intended Audience

This Users' Guide contains everything you need to know to prepare for installation, install, and configure a SkyWay Wireless Bridge/Router. It assumes the following:

- You are functioning in an Information Services or Building Facilities capacity
- You have more than one year's experience with networking, either wireless or traditional
- You are familiar with basic networking concepts such as bridging, IP routing, WAN protocols, etc.
- You are familiar with your LAN or WAN's topology, configuration, and design
- If you will be using Simple Network Management Protocol to manage SkyWay, you are familiar with the protocol's terms and usage
- You are familiar with basic RF/wireless network design, even if you are not familiar with the particulars of any specific system

Note If you do not have the knowledge listed above, we recommend that you hire a consultant to assist you with installing and configuring your SkyWay and network.

Using this Guide

This guide contains the following chapters and appendixes:

- Chapter 1 (this chapter)
- Chapter 2: Getting to Know the SkyWay Bridge/Router

  This chapter provides an overview of the features and physical elements of the SkyWay Wireless Bridge/Router, including how to use the Administrative Console.
- Chapter 3: Preparing for Installation

  This chapter explains how to plan a successful SkyWay installation, including a brief discussion of site design and detailed bench testing instructions.
- Chapter 4: Installing Skyway

  This chapter discusses how to mount and connect SkyWay.
- Chapter 5: Configuring and Managing SkyWay

  This chapter discusses how to configure SkyWay as a bridge, a router, or both, including instructions for setting up base and substations.
- Chapter 6: Monitoring SkyWay

  This chapter describes the SkyWay utilities you can use to monitor transmission and routing performance.
- Chapter 7: Troubleshooting Skyway

  This chapter presents a method for diagnosing problems you may have with the unit. It also includes instructions for contacting Solectek Technical Support.
- Appendix A: Run-time Menu Tree

  This appendix provides a summary of the SkyWay menu structure, including cross-reference to more detailed information.
- Appendix B: BIOS Menu Tree Summary Table

  This appendix provides a list of the BIOS menu tree, including cross-reference to more detailed information.
- Appendix C: Interface Specifications and Pinouts

  This appendix explains the pins and wire color for each of the SkyWay connectors, in case you ever need to repair a cable.
- Appendix D: Detailed Product Specifications

  This appendix lists the specifications for SkyWay components and connectors.
- Appendix E: Supported Protocols

  This appendix details the routing and bridging protocols SkyWay supports.
- Appendix F: Error Codes

  This appendix describes the error codes the SkyWay administration console may provide.

- Appendix G: SNMP Trap Messages

  This appendix lists the standard and enterprise SNMP traps.
- Appendix H: Installation Recording Form

  This appendix provides the forms you should use to record installation parameters.
- Appendix I: Sources of SNMP Management Software

  This appendix explains where to obtain SNMP management software.
- Appendix J: Glossary and Basic Concepts

  This appendix lists and defines important terms used in this manual.
- Appendix K: Skyway Antennas

  This appendix lists antenna specifications.
- Index

Conventions, warnings

The following conventions are used in this Operator's Guide.

Menu and Command Names

Menu and command names appear in a **bold typeface**.

Typed Text

Screen commands and text you are to type appear in a `Courier typeface`.

Notes

Notes are information requiring your attention.

Warnings

Warnings are statements that, if you ignore them, can damage the SkyWay Bridge/Router or cause injury to yourself or others.

Hyperjumps

This guide contains hyperjumps to make it easy to navigate the PDF version of this book. Click on cross-references, TOC listings, or index entries to go to the appropriate page. The chapter number and names under “Using this Guide” on page 3, are examples of hyperjumps. For example, if you click “Chapter 2: Getting to Know the SkyWay Bridge/Router” you go to the first page in Chapter 2.

How to Proceed

Review this manual before proceeding further. The chapters present the information you need to begin in the order you will need it.

Chapter 2: Getting to Know the SkyWay Bridge/Router

Before setting up, configuring, and testing your new bridge/router, take a minute to review its components and features.

This chapter includes the following information:

General Description 8

Product Features..... 9

Contents of the SkyWay Package..... 10

Component Identification 11

Specifications 12

Understanding the Menu Structure 13

Bios Application 18

Accessing the SkyWay Bridge/Router..... 22

General Description

SkyWay -- The Long Distance Connection. The SkyWay series of products allows you to set up high-speed, wide area networks over long distances. SkyWay gives you the power to establish LAN-to-LAN connections over distances of up to 30 miles (48 km) - with superior performance. Each SkyWay unit is a compact, single, integrated outdoor unit designed to withstand harsh environments—there is no need for an indoor unit. SkyWay can be mounted on a mast or tower up to 4,000 feet (1200m)away from the LAN. This reach enables you to deploy far less equipment to cover your service area.

Point-to-Point or Multi-Point Application. SkyWay products can be used anywhere high speed data transfer or Internet access is required including corporate offices, educational campuses, healthcare facilities, manufacturing, or retail. Configurations can be set for Point-to-Point or Multi-Point applications.

Each SkyWay can function as a base station (central site), a substation (remote site), or either end of a point-to-point link. Solectek's broad selection of certified antennas ensures that you get exactly the radio coverage you need.

Remote Operations. With SkyWay Series products, all management functions, monitoring, and software updates can be performed remotely from any desired location.

Support. Solectek offers a world-wide network of factory trained resellers as well as on-site and on-line technical assistance programs.

Product Features

The SkyWay Bridge/Router include the following key features:

- Up to 11 Mbps wireless data rate *(up to 64 sub-stations)*
- Links of distances up to 30 miles (48 km)
- Single, ruggedized, mast-mounted unit *(UL Outdoor rated)*
- Fiber-optic and copper Ethernet options
- Bridging and static IP routing
- SNMP compliant
- Optional fiber link for extra long distances or EMI protection
- Remote software updates via TFTP, Xmodem, or Ymodem
- FCC, Industrie Canada, ETSI, and UL certified
- Milspec connectors/industrial components for ultra-reliable service
- Secure Authentication Features
- Spanning Tree Configurations
- Supports DC voltage

Contents of the SkyWay Package

Before unpacking the SkyWay, examine the shipping containers and contents for damage. If you spot container damage, notify your shipper immediately.

Report any missing parts and any damage not related to shipping to your place of purchase immediately.

The SkyWay shipment includes three packages:

- The SkyWay Bridge/Router (including pole or wall mounting kit)
- The SkyWay cable kit:
  a. A DC power cable and AC/DC converter
  b. A console cable (RS-422 cable and RS-422 to RS-232 converter)
  c. An Ethernet cable (either 10 Base-T/100 Base-TX or 100 Base-FX, depending on the configuration ordered)
  d. A LMR-400 RF cable
- The SkyWay antenna kit (omni or directional, as ordered by customer) and a test antenna

This User's Guide will also be enclosed.

Note: Keep the packing materials for future use. All components returned under warranty must be packed in their original packing materials.

Component Identification

The Skyway wireless bridge/router includes the following components:

- a ruggedized, weatherproof casing
- four connectors:

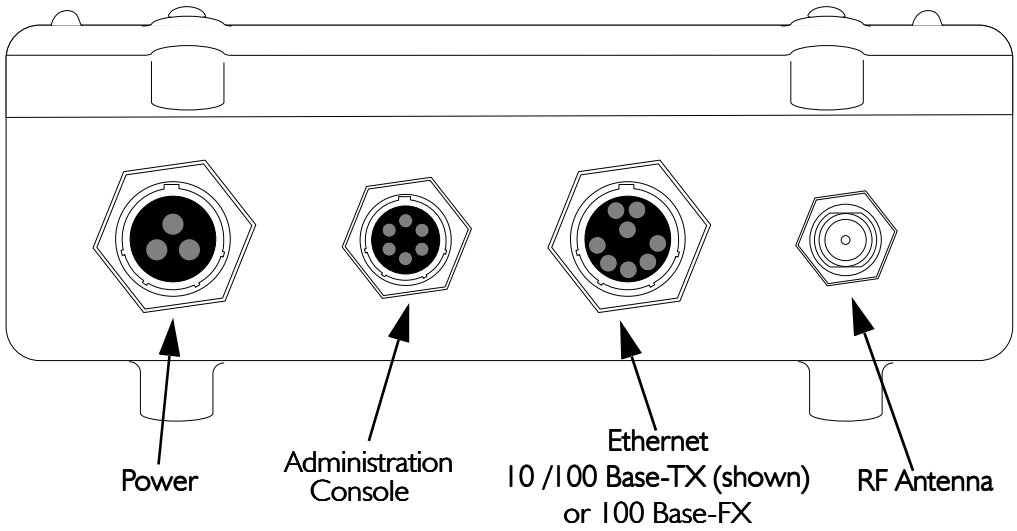

Bottom View of the SkyWay Bridge/Router

Power. The power receptacle (3 pin) accommodates the DC power cable supplied with the SkyWay; it accepts 48 V DC. To apply or remove power, connect or disconnect the power cord to or from the AC/DC power converter.

Administration Console. The EIA/TIA-422 console connector (6 pin) accommodates the console cable supplied with the SkyWay. The opposite end of the cable has a DB-9 RS-422 connector that connects to a supplied RS-422 to RS 232 converter that you connect to the RS-232 port of your PC or terminal. You can also connect the converter to your modem. For a diagram, see "Accessing the SkyWay Bridge/Router" on page 22.

Ethernet Port. The Data/Ethernet connector accommodates one of the following two cables depending on the SkyWay model you ordered:

- 10/100 Base-TX (twisted pair) (8 pin)
- 100 Base-FX (fiberoptic) (2 pin)

The opposite end of either cable connects to your LAN or WAN server's Ethernet port.

RF. The RF connector ("N" type female) accommodates an LMR-400 RF coaxial cable that connects to an RF antenna. For more information about antennas, see "Appendix K: Skyway Antennas" on page 213.

For pinout information, see "Appendix C: Interface Specifications and Pinouts" on page 181.

Specifications

For a list of SkyWay Bridge/Router specifications, see "Appendix D: Detailed Product Specifications" on page 185.

Understanding the Menu Structure

The SkyWay screens are organized by function, and are hierarchically numbered. The Run Time Main Menu is shown below:

Main Menu

1. Configuration
2. Status and Control
3. Utilities
4. Diagnostics
5. Start Application
6. Exit

The Configuration menu, option 1, shows you a list of 5 options. For example, 1.1 System Configuration, 1.2 Port Configuration, etc. For a complete list of the screens in the menu tree, refer to "Appendix A: Run-time Menu Tree" on page 175, and "BIOS Menu Tree Summary Table" on page 179.

For information on the Bios Application, see

Navigating Through Menus and Screens

Use the keys in the following table to navigate through the menus:

To…	Press This Key…
Move down or up through menu options	Down- or Up-Arrow
Move through list of field entries	Right- or Left-Arrow or space bar
Select an item or edit a field	Enter
Go up one menu level	\ (Blackslash)
Move between fields	Tab, Up- or Down-Arrow
Enter a command	.(dot) followed by the command. (see "Dot Commands" on page 14)
Go directly to a particular screen if you know the screen number	From the Main Menu, enter the screen number. From other screens where commands are available, press . (dot), then type the number of the screen. The screen title appears above the number. If this is the screen you want, press Enter.

Dot Commands

You can access commands from all non-menu screens. When they are available, **. - commands** appears at the bottom of the screen. Press . to display the command line which lists the available commands for that screen, that is, not all commands are available on every screen. The following table describes the commands:

.H	Go to the HELP screen, which lists arrow keys and . commands.
.M	Monitor Mode on or off. Monitor mode continuously refreshes the data displayed, allowing you to see the system operating in real time.
.R	Update screen data (refresh)
.W	Save screen data to the database (write). This is usually required after you make a configuration change before the change takes affect.
.A	Add a new record to a table
.N	Display the next record in a table.
.P	Display the previous record in a table.
.C	Cancel any changes made to this screen **before** you press .W
.G	Go to the specific table record by key value (for example, port number).
.Z	Clears the statistics on the current status screen (zero)
.F	Flushes tables. Available for these screens: • 2.1.3 Error Log Screen • 2.3.4 Transparent Bridging Table • 2.4.1.5 ARP Table This is functionally the same as accessing the 3.3 Flush utility, which allows you to flush one or more of the above tables at a time.
.(dot)	Use to go to a particular screen number. Type . (dot), then type the screen number you want to go to (for example, 224) and press Enter. You cannot use this method at a menu screen.

How Screens Display Information

Configuration and status records are displayed in the following formats:

- As a static variable
- As a table with many rows or records
- As a table with one row or record

Screens Displaying One Record. On some screens, one row or record of the table appears at a time (see screen 2.2.1. for an example). All of the data displayed is from a single record in the table. The record you are looking at is indicated at the top right of the screen (for example, `Record 1 of 2` means you are looking at the first record (row) of data in a two-record table). Press .N to see the next record, or .P to see the previous record.

Scrolling Screens. Some screens display information that does not fit on one screen (for example, the summary screens, such as 1.6 Configuration Summary). Press .N to see the next screen, or .P for the previous screen.

Common Rows. Common fields appear only on screens containing tables with many rows. Common rows display in the 4-row space above the command line at the bottom of the screen. These rows display field data for the record at the cursor position. For example, in screen "2.5.1 RF-DLC Base Port Status" on page 140, when the cursor points to the first row, the field data at the bottom of screen are for that record.

Editing Fields

Fields that you can edit or configure display the current value with a blinking cursor. To change the value, position the cursor on the field, and press ´.

Field Types

The types of field data in a record are:

- Numeric - Enter a number within a certain range. If the number you enter is outside the range, the field redisplays the original value and the cursor remains on the field.
- Text - Enter alphanumeric characters up to the maximum length allowed.
- Select from a List - Enter or select values using the arrow keys or Space Bar to scroll through the list of valid entries for that field (brackets appear around the field value).

To finish editing the field, press Enter to accept the new value, remove the brackets, and move to the next field.

To back out all changes, press .C to cancel.

To save all changes, press .w to write the changes to the database.

Note Access to certain screens and fields may be restricted for certain users. See "Adding Users and Setting Access Levels" on page 62.

Saving Configuration Changes

Save any changes you make by using the .W command. This updates the database immediately, and the screen refreshes, displaying the new values. Sometimes, however, you must reset the unit, or cycle the port for the changes to take affect (see "Changes that Require Cycling or Resetting" on this page).

If you make changes to a screen, and try to leave it without saving, the screen warns you "`Data has been modified. Write or Cancel changes`." Press .W or .C to remove the warning and return to the screen.

Note Sometimes the Write and Cancel commands do not appear in the list of commands (at the bottom of screen) unless you make a change to a field.

Understanding the Configuration Database

Default configuration settings are stored in a non-volatile configuration database on the SkyWay. When the unit is started or reset, the configuration database is loaded and determines the runtime characteristics of each port.

The SkyWay allows you to make configuration changes to the Ethernet and RF ports without disrupting operations. The changes are stored in the configuration database, allowing you to change Skyway's runtime port characteristics without resetting the unit, by 'cycling' the port. This allows you to make minor changes on a port by port basis without affecting operations on the other ports. This is very important on a base station supporting many sub stations, where you need to avoid breaking the communications link between the base station and any sub station.

Changes that Require Cycling or Resetting

You must cycle the port for the changes to take affect immediately if you edit any port level configuration parameters (for example, those in the 1.2 menu tree).

To cycle the port:

1. Go to 2.2.1 Generic Port Status and Control.
2. Type 3 (or .N until the port number is the one you want).
3. Set the Administrative Status field to *Cycle*.
4. Type .W

   Cycle evacuates the port, reinstalls the driver, reads the database, and brings up the port.

Resetting the Unit

You must reset the unit if you download an update to the SkyWay software using the file transfer utilities, or if you change any global parameter, such as:

- enabling or disabling bridging
- enabling or disabling routing

- changing the RF frequency
- changing the data rate

Caution If you are resetting the base station, all the sub station links also go down. The sub stations then go into ADP mode.

To reset the unit:

1. Go to the Main Menu.
2. Type 5 (Start Application).
3. Choose *Runtime* as the Application to Start.
4. Press .W.

   This reloads the updated database containing the new configuration parameters.

Bios Application

The Bios application is mainly used for diagnostic purposes and is not available through SNMP. There are two ways to start the Bios application:

Starting the Bios Application from Reset

1. When you reset the unit, a message displays asking you to press any key to start the Bios Application before the time out occurs and Run time starts. Press any key, which starts the Bios application and displays the Bios Login screen.
2. Enter your username and password.
3. The Bios Main Menu displays.

Starting the Bios Application from Runtime

1. From the Runtime Main Menu, press 5 (Start Application).
2. Choose Bios Application as the Application to Start. It takes several seconds before the "Press any key to start Bios application" message displays.
3. Press any key before the timeout occurs (or the system restarts the Runtime application). The Bios Login screen displays.
4. Enter your username and password.
5. The Bios Main Menu displays.

Bios Main Menu

The Bios menu consists of 9 options:

Bios Main Menu

```
          Bios Main Menu

    1. Configuration Menu
    2. Diagnostics
    3. Files
    4. Utilities
    5. Error Log
    6. User Screens
    7. Reset SkyWay
    8. Start Application
    9. Log Off









Use arrow keys to select an item, then press ENTER;  \ - Go up one level
```

Since many of the options here are similar to those in the Runtime application, the following table tells you where to find further information:

Bios Menu Option	For information, see...
1. Configuration Menu	"Bios Configuration Menu" on page 19
2. Diagnostics	" BIOS Diagnostics" on page 104
3. Files	" File Directory" on page 111
4. Utilities	
4.1 YMODEM and 4.2 XMODEM	" 3.1.2 YModem" on page 114
4.3 Configuration Database Service	" Configuration Database Service" on page 21
4.4 Real Time Clock	" Setting the System Date and Time" on page 64
5. Error Log	" Checking the Error Log" on page 130
6. User Screens	" Adding Users and Setting Access Levels" on page 62

The remaining options are:

Bios Menu Option	Function
7. Reset SkyWay	Immediately resets the unit.
8. Start Application	Starts the Runtime application.
9. Log Off	Exits SkyWay

Bios Configuration Menu

The Configuration options are:

Option	See Runtime Screen
System	None (see "Bios System Configuration" on this page)

Option	See Runtime Screen
Serial Port	"1.2.1.1 Serial Port Configuration" on page 24
Serial Transceiver	"1.2.1.2 Serial Transceiver Configuration" on page 25
Ethernet Port	"1.2.2.1 Ethernet Port Configuration" on page 83
Ethernet Transceiver	"1.2.2.2 Ethernet Transceiver Configuration" on page 85

Bios System Configuration

Use this screen to check your system configuration and to change the Bios Timeout default.

```
    1.1. System

Product Code          : SkyWay Bridge
Board Revision        : Version 1
Software Version      : Bios Version 00.31A-T
Media Type            : Twisted-pair
RF Power Type         : Low Power
VCO Type              : Package
SDRAM Size            : 16 Megabytes
Flash Size            : 4 Megabytes
Serial Number         : 0
Country Code          : U.S.
MAC Address           : 00:c0:61:00:00:00
Bios Timeout (sec)    : 5









\ - return to menu    . - commands    TAB - next available field    ENTER - edit
```

The Bios Timeout sets the default number of seconds the system waits to allow you to press a key to load the Bios Application. The range is 5 to 120 seconds.

Configuration Database Service

This utility allows you to work with the Bios and Runtime configuration databases.

```
        4.3. Configuration Database Service


Bios DB Action   :     None
Runtime DB Action:     None

Bios DB Status   :     Present
Runtime DB Status:     Present
Saved DB Status  :     Absent



\ - return to menu    . - commands    TAB - next available field    ENTER - edit
```

Field Name	MIB	Default Setting
Bios DB Action	• None	• Initialize
Select Initialize to clear out the present Bios configuration database and restore the default shipped configuration.		
Runtime DB Action	• None • Initialize	• Save • Restore
Select Initialize to clear out the present Runtime configuration database and load the default factory configuration database. Select Save to save the current Runtime configuration database as the new default Runtime configuration database. Select Restore to clear out the present Runtime configuration database and load the Saved Runtime configuration database.		
Bios DB Status	• Present	• Absent
A status field which tells you whether the Bios database is loaded.		
Runtime DB Status	• Present	• Absent
A status field which tells you whether the Runtime database is loaded.		
Saved DB Status	• Absent	• Present
A status field which tells you whether a Saved database is loaded.		

Accessing the SkyWay Bridge/Router

There are three ways to access the SkyWay Bridge/Router:

- **Direct Connection.** Use a terminal that is directly connected to the unit's RS-422 port. This is called the local console, and it allows you to directly access all of the Skyway's configuration and management screens.
- **Dial-up Connection.** Use a dial-up modem attached to the SkyWay to access the local console. Functionally, it is the same as being directly connected.
- **SNMP Connection.** Use an SNMP Manager to access most of the Skyway's configuration screens. The SNMP Manager accesses the SkyWay over Ethernet or a SkyWay's RF link with another SkyWay. For Configuration and Status screens not accessible via SNMP, see "Appendix A: Run-time Menu Tree" on page 175.

The following diagram shows these three methods:

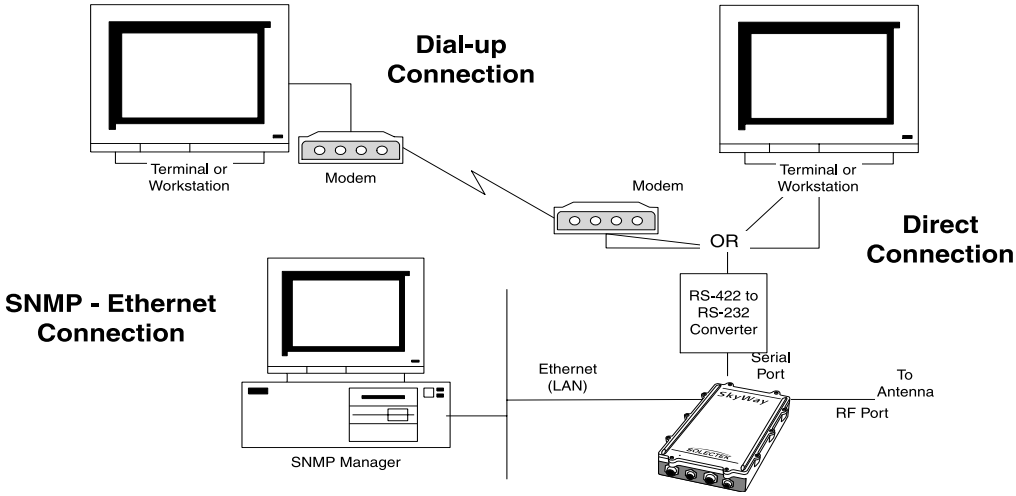

For more information about connecting the SkyWay to a console, see "Connecting to the Administration Console" on page 51.

Modem Settings for Dial-up Connection

To configure a modem attached to the SkyWay

1. Set the modem to Auto Answer.
2. Set the modem's RS-232 port speed to Fixed. It cannot follow the connection speed, because SkyWay's serial port is a manually configurable fixed speed.
3. Set DTR to High to Always On. This is necessary for some modems.

To configure the Terminal for dialing to the SkyWay

1. Set the terminal to type VT-100.
2. Set the baud rate to the SkyWay-configured baud rate (default is 115200 bps). To change the SkyWay's baud rate, go to "1.2.1.1 Serial Port Configuration" on page 24.

3. Set the terminal to 8-bits, No Parity, 1 Stop Bit.
4. Dial the modem attached to the SkyWay.

Example AT Commands

You may need to write a command line to configure your modem for use with the SkyWay. The example command line below is listed for your convenience and is not configured through a screen on the SkyWay. The following is an example of the AT command settings for a USRobotics V.Everything modem attached to the SkyWay.

The AT command line reads: `ATQ1&A0&B1&D0&F0&H0&R1S0=1&W`

Where…	Means…
Q1	Suppress result codes
&A0	Don't display ARQ result codes
&B1	Fixed DTE speed
&D0	Ignore DTR
&F0	Load no flow control template settings
&H0	Disable transmit data flow control
&R1	Ignore RTS
S0=1	Answer on first ring
&W	Write to NVRAM

The above command line disables any flow control, fixes the speed of the serial port, and disables any response codes back to the SkyWay unit. Make adjustments or additions to these settings based on your local configuration.

These change the default configuration; however, the modem should then boot from the NVRAM settings.

Configuring the Serial Port and Serial Transceiver

Go to the 1.2.1.1 Serial Port Configuration, or 1.2.1.2 Serial Transceiver Configuration screen.

1.2.1.1 Serial Port Configuration

```
       1.2.1.1 Serial Port Configuration

Port Number          :  1
Configuration Status :  On-line
Buffers              :  80
Transmit Buffers     :  12
Receive Buffers      :  12
Maximum Frame Size   :  512









\ - return to menu    . - commands    TAB - next available field    ENTER - edit
```

Field Name	MIB	Default Setting
Port Number	[swSerialPortIndex]	1
The serial port number is 1.		
Configuration Status	[swSerialPortConfigStatus]	On-line
Whether this port configuration initializes upon reset. On-line means the port comes up as a serial port when the unit is reset; Off-line means the port does not initialize upon reset.		
Buffers	[swSerialPortMaxBuffers]	80
Serial port buffers.		
Transmit Buffers	[swSerialPortTransDesc]	16
Serial port transmit buffers.		
Receive Buffers	[swSerialPortRecvDesc]	16
Serial port receive buffers.		
Maximum Frame Size	[swSerialPortMaxFrameSize]	512
Largest frame that can be transmitted vial the serial port		

1.2.1.2 Serial Transceiver Configuration

```
      1.2.1.2 Serial Transceiver Configuration

Port Number          :  1
Baud Rate            :  115200
Data Bits            :  8
Parity               :  NONE
Stop Bits            :  One

\ - return to menu    . - commands    TAB - next available field    ENTER - edit
```

Field Name	MIB	Default Setting
Port Number	[swSerialPortIndex]	1
The serial port number is 1.		
Baud Rate	[swSerialPortBaudRate]	115200
The baud rate of the local serial port.		
Data Bits	[swSerialPortDataBits]	8
The number of data bits for the serial port.		
Parity	[swSerialPortParity]	NONE
The parity setting for the serial port.		
Stop Bits	[swSerialPortStopBits]	One
The number of stop bits for the serial port.		

Chapter 3: Preparing for Installation

Since the Skyway bridge/router is a ruggedized device installed outside the building, Solectek recommends spending some time planning the installation and testing the configuration before permanently mounting the units.

This chapter contains the following information:

Before Installing 28

Safety Considerations 29

General Safety Guidelines 29

Electrical Safety Guidelines 29

Pre-installation Procedures 30

Site Considerations 30

Bench Test 32

Before Installing

To complete your SkyWay installation, you need the following items:

- A pair of cellular telephones or walkie-talkies, so installers can communicate when aligning SkyWay antennas during the installation process
- (Optional: Needed only if you find it absolutely necessary to cut the indoor connectors off to accommodate pulling the cable through conduit):
  - *Ethernet cable*: an RJ-45 cable crimper to terminate the RJ-45 connection to the Ethernet LAN during the installation process
  - *Serial cable*: a small screwdriver to disassemble the DB-9 case, a pin removal extractor tool or a replacement DB-9 jack
  - *Power cable*: a soldering iron

  For pin-out information, see "Appendix C: Interface Specifications and Pinouts" on page 181.
- VT-100 console or a workstation with VT-100 emulation capability and terminal emulation software such as Hyperterm™ or Procomm™ to configure the SkyWay Bridge/Router
- (Optional) a modem, if you want to operate the SkyWay Bridge/Router through a dial-up connection
- 13 mm hex socket wrench for mounting bracket
- Slotted screw driver for mounting clamps

Safety Considerations

The following sections provide guidelines to ensure your safety when installing and working with the SkyWay Bridge/Router.

General Safety Guidelines

Observe the following guidelines to ensure general safety:

- Keep tools away from walk areas where you and others could trip over them.
- Do not wear loose clothing that could get caught in the chassis mounting hardware. Fasten your tie or scarf and roll up your sleeves.
- Wear safety glasses when working under any conditions that might be hazardous to your eyes.
- Do not perform any action that creates a potential hazard to people or makes the equipment unsafe.

Electrical Safety Guidelines

Observe the following electrical guidelines when working on the SkyWay Bridge/Router.

- Do not work on the system or connect or disconnect cables under these conditions:
  - during a thunderstorm
  - when wearing a wool sweater or other heavy wool clothing
  - when power is applied
- Do not touch the SkyWay power supply when the power cord is connected. Because the SkyWay Bridge/Router does not have a power switch, line voltages are present within the power supply when the power cord is connected to the Bridge/Router.
- The SkyWay's Bridge/Router relies on the building's installation for short-circuit (overcurrent) protection. Make sure that a fuse or circuit breaker not larger than 120 VAC, 15A U.S. (240 VAC, 10A international) is used on the phase conductors (all current-carrying conductors).
- Before working on the SkyWay chassis, unplug the power cord from the AC outlet or disconnect the fuse or circuit breaker.
- Locate the emergency power-off switch for the AC source connected to the SkyWay Bridge/Router. If an electrical accident occurs, use this switch to turn off power to the bridge.
- Identify possible hazards in your work area, such as moist floor, ungrounded power extension cables, and missing safety grounds. Do not work alone if potentially hazardous conditions exist.

Pre-installation Procedures

Planning and feasibility studies are critical to successfully integrate the SkyWay Bridge/ Router with your network. There are additional factors, for example, Radio Line of Sight and overall RF environmental issues, which must be taken into account for wireless connectivity.

Site Considerations

Deploying a successful network requires feasibility studies and careful planning, particularly for wireless connectivity solutions where additional factors must be considered. Radio Line of Sight and overall RF environment must be assessed and documented to assist in determining the initial installation as well as providing a baseline for future RF environmental measurements when suspected local RF environment changes occur.

Step One: Assess Your Network Requirements

Solectek recommends the following steps in determining the feasibility of a wireless internetworking solution using Solectek wireless bridges and routers:

- Identify, list and classify the data resource centers by type and number of users
- Layout the topology of voice, data and video networks indicating bandwidth requirements, protocols, and media of each network segment.
- Plan and layout the IP addressing scheme for IP and IPX networks
- Ensure all protocols deployed in the planned network, including planned wireless segments, can be encapsulated in Ethernet frames 802.1d, 802.3, and 802.2.
- Identify protocols and network segments which will require encapsulation in IP packets and consequent routing.

Step Two: Map Wireless Network Pre-Design

You then provide details about locations to be connected, for example, building-to-building, or server-to-ISP.

- Identify and mark the locations of the main nodes of the network on a geographical map of the region. Attach full street addresses and building characteristics to each location.
- Gather site coordinates (latitude and longitude) for each location
- Use the site coordinates to determine optimal geographical layout of desired link paths for wireless network segments, and complete the wireless network geographical map.
- Determine minimum antenna height requirement for each location, which guarantees that in each link's path, at least 60% of Fresnel zone is unobstructed.

Step Three: Perform a Site Survey

In this step, you assess the Line of Sight and RF environmental factors.

- Check for the existence of competing RF signals, using a spectrum analyzer.
- Detect and measure the potential sources of interference in selected RF bands for each site
- Mark the direction and nature of detected RF interference on the wireless network map (created in step two).
- Determine the height of obstacles (trees, buildings, highways) in each link's path.

Step Four: Finalize the Design

The final step includes adjusting your plan and selecting equipment.

- Adopt changes in the network layout to overcome RF interference, and to guarantee the minimum required bandwidth for each link.
- Adjust antenna height requirements based on identified obstacles in the site survey.
- Select the antenna types for each site, based on the link distance and minimum antenna co-location requirements.
- Select an RF channel and antenna polarity plan for each link.
- Select cable types and lengths.

Bench Test

Solectek strongly recommends using the Bench Test for testing the SkyWay Bridge/ Router prior to installing it in its permanent location. The test provides a means to install and configure the equipment to your requirements. It allows you to become familiar with the equipment's operation and capabilities in a user-friendly environment. Installers who bench test all equipment and configurations have a significantly higher success rate during field installation than those who skip the test.

The following are required for the bench test:

- At least 2 SkyWay units
- SkyWay power cable and AC/DC converter
- Console cable and RS-422 to RD-232 converter
- Test antenna for each SkyWay RF port
- Two terminals or workstations with VT-100 emulation capability (one for each Skyway), or one workstation with two RS-232 ports to accommodate two SkyWays (see "Step One: Connecting Components" on page 33).

Minimum Configuration Settings and Factory Defaults for Bench Test

- RF frequency: Use the most efficient RF frequency for your SkyWay as determined during the site survey.
- Tap Value: During installation, the installer decides on an appropriate tap value for your SkyWay so that there is no interference with other SkyWay traffic.
- Mode: Designate one SkyWay as the base station, and the other as the sub station.

Performing the Bench Test

Step One: Connecting Components

Use the following to connect the components in a bench test environment. There are two possible scenarios:

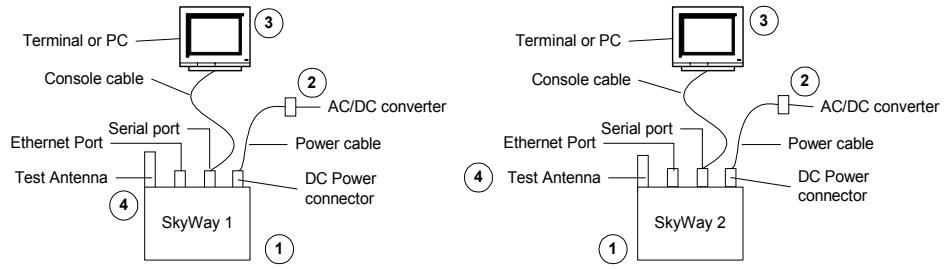

Scenario 1: Two SkyWay units connected to two terminals or PCs

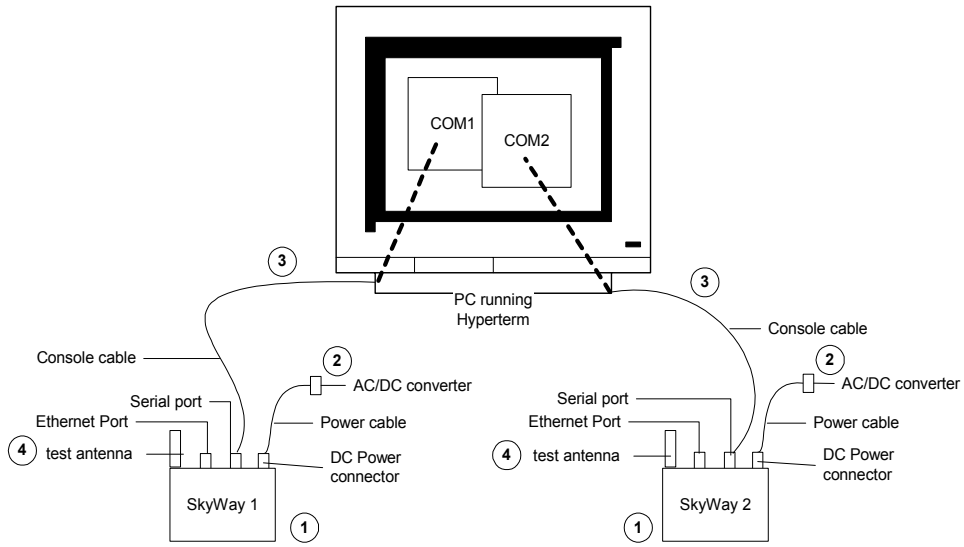

Scenario 2: Two SkyWay units Connected to One PC

1. Position two SkyWays side by side.
2. Connect the DC power cables to the rear panels of the SkyWays. Connect the other ends to two AC/DC converters. Plug in the converters to power.
3. Connect two console cable connectors to the rear panels of the SkyWays. Connect the opposite ends (RS-422/RS-232 converters) to the COM1 ports of two computer workstations or to the COM1 and COM2 ports on one computer workstation.
4. Connect the test antenna to the RF ports of the SkyWays.

Step Two: Preparing the Computer Workstation for the Bench Test

Use the following steps to set up the administration console that you will use to monitor and configure the test. The following shows an example using a PC with Hyperterm set for VT-100 terminal emulation.

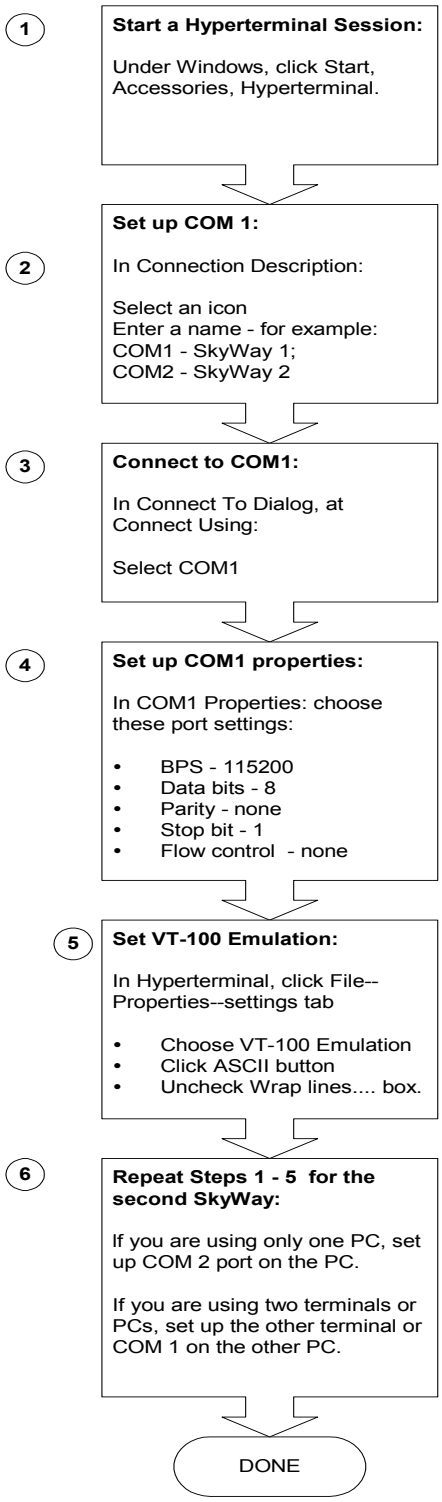

1. Start Hyperterminal on one of the workstations. (For Windows, go to Start | Accessories | Hyperterminal.)
2. In the **Connection Description** box, select a name and icon.
3. In the **Connect To** box, at "Connect using", select COM 1.
4. In the **COM 1 Properties** box, select the following port settings:
   - Bits per second: 115200
   - Data bits: 8
   - Parity: None
   - Stop: 1
   - Flow control: None
5. From the Hyperterminal top menu, select File | Properties | Settings tab, and do the following:
   - From the Emulation menu, select "VT-100".
   - Type the ASCII setup button, and clear the **wrap lines** box.
6. Start Hyperterminal again on the same workstation to open a new screen (if you have connected the SkyWay to two COM ports), or start Hyperterminal on a second workstation linked to the second SkyWay. Do the following:
   - In the **Connection Description** box, select a new name and icon.
   - In the **Connect To** box, at "Connect Using," select COM 2 if you are using one computer and two com ports. If you are using a second workstation, select COM 1.

Step Three: Configuring the Bench Test

Use the following steps to set the parameters for running the bench test.

Login to SkyWay1:

1. Go to the first Hyperterminal blank screen (this will be the Base station).
2. Press Enter to bring up the SKYWAY Login Screen.
3. Enter "Solectek" as the default for both username and password.

SkyWay

Model_xxx
Version 1.0

Solectek Corporation
Copyright 1999 - All Rights Reserved

System Name :
System Location :

User Name :
Password :

4. **Configure the RF Base Diag Port:**

At the Main Menu, type 1232 to get to this screen

Port Type=RF Base Diag

Type .W to write the changes to the database

1.2.3.2 RF Diagnostic Port Configuration

Port Number	3
Configuration Status	On-line
Port Type	RF-DLC Base Diagnostic Port
Max Buffers	800
Transmit Buffers	240
Receive Buffers	180
Maximum Frame Size	3200
Record Type	Valid

5. **Configure the RF Sub Diagnostic Port:**

Go to screen 1.2.3.3 to set the RF Transceiver values based on your Site Survey.

Type .W to write the changes to the database

1.2.3.3 RF Transceiver Configuration

RF Port	RF Frequency	RF Data Rate	Scrambler Tap
3	2468	2 Mbps	72

6. **Cycle the port:**

Go to screen 2.2.1Generic Port and Status Control

Port Number = 3
Port Type = RF-DLC Base Diagnostic
Admin Status = Cycle

Type ☐W to write the changes and cycle the port. After a few seconds, Operation Status changes from "Transitioning... Up" to "Up Port."

2.2.1 Generic Port Status and Control

Port Number	3
Port Type	RF-DLC Base Diagnostic Port
Port Baud Rate	2 Mbps
Largest Datagram Size	1492
Physical Address	00:00:c4:1cc:91:45
Administrative Status	Cycle
Operational Status	Up Port
Last Status Change	0.01 seconds
Maximum Transmit Buffers	512

7. **Configure the RF Sub Diagnostic Port:**

Go to the other Hyperterminal blank screen OR the other terminal.

Repeat steps 1 thru 6, except the Port Type = RF Sub Diagnostic Port for each sub station unit.

1. Go to the first Hyperterminal blank screen (which will serve as the "Base").
2. Type **ENTER** to bring up the Login screen.
3. Enter "Solectek" as the default for both username and password.

Note To access a screen from another non-menu screen, press . followed by the screen number and press Enter, or return to the main menu and type the screen number. For tips on navigating the screens, see " Navigating Through Menus and Screens" on page 13.

4. The Main Menu for Run Time Application will appear. Type 1232 to access the RF Diagnostic Port Configuration screen. Make the following changes (setting may already be correct):
   - Port Type: RF-DLC Base Diagnostic Port
   - RF data rate: depends on configuration setting (2, 5.5 or 11 Mbps)

   Type . W to apply the change. Return to the Main Menu.
5. Press 1233 to access the RF Transceiver Configuration screen. Configure the following values, based on information obtained during the site survey process:
   - RF Frequency
   - RF Data Rate
   - Scrambler Tap

   Type .W to apply the change.
6. Press 221 to access the Generic Port Status and Control screen. Make the following changes:
   - Port Number: 3 (RF Port)
   - Administrative Status: Install Port

   Type .W to apply the change. Make sure **Administrative Status** changes to Up Port. This demonstrates that the port is active.
7. Go to the sub station screen. Repeat steps 2 through 6. In the RF Diagnostic Port Configuration screen (1232; step 4), **Port Type** must be RF-DLC Sub Diagnostic Port. Do this for each sub station included in the bench test.

Step 4: Starting the Bench Test

The two SkyWay units will now transmit information back and forth to test wireless performance.

Set up the Base Station Test:

1. Go to SkyWay1 (the base station).
2. Type 4 1 to access this screen

Test to Run = Single Frame Ping Pong Mode
Test Timeout = depends on the bandwidth:

- 36 ms for 2 Mbs
- 12 ms for 5.5 Mbs
- 9 ms for 11 Mbs

Type ☐ W to write the changes

4.1 RF Base Radio Test

* Note - diagnostic driver must be installed *

RF Port Number	3
Test Timeout	(NSL List) Milliseconds
Test To Run	Single Frame Ping Pong Mode

Number of Frames or Bursts, 1 to 65535 or 0 for continuous	: 0
Frame Length or Maximum Burst Size, 3 - 3200 bytes	: 1530

Set up the Sub Station Test:

3. Go to SkyWay2 (the sub station).
4. Type 4 2 to access this screen

Test to Run = Single Frame Ping Pong Mode

Type ☐ W to write the changes

4.2 RF Sub Radio Test

* Note - diagnostic driver must be installed *

RF Port Number	3
Test to Run	Single Frame Ping Pong Mode

Monitor the test on the Sub:

5. You are still at SkyWay2 (sub). Type 2 2 4 to access this screen

Type ☐ Z to clear the statistics
Type ☐ W to enter monitor mode

2.2.4 RF Port Status

Port Number		3		
Port Type		Sub Port Diagnostic		
Port Status		On-line		
RF data rate		2 Mbps		
RF Channal		2468 Mhz		
Bytes	IN	0	OUT	0
Frames	IN	0	OUT	0
Discards	IN	0	OUT	0

Digital Phase Lock Loop
Frame Length Violation
Non Octet Aligned Frame
Abort Sequence
CRC Error
Overrun
Carrier Detect Lost
Underrun
CTS Lost

Check the results:

6. Wait at least 30 seconds for an accurate reading
7. Total the sum of the errors in the errors column. The sum should be less than 1% of the total number of frames received (IN).

Terminate the test:

Go to screen 4.1.2 and change Test to Run = Terminate Test

Type ☐ W to write the change

Monitor the test on the Base:

8. Go to SkyWay1 (the base station)
9. Repeat Step 5 - the Port Type is Base Port Diag

1. Return to the base station.
2. Access screen 4.1 Base Radio Test. Change the following:
   - Test to Run: Single Frame Ping Pong Mode

     This mode means that the base station sends out frames one at a time, and the sub station returns them one at a time.
   - Test Timeout to the appropriate ms selection. Select 36 ms for 2 mb, 12 ms for 5.5 mb, and 9 ms for 11 mb.
3. Go to the sub station.
4. Access screen 4.2 (Sub Radio Test). Make the following change:

   Test to Run: Single Frame Ping Pong Mode
5. Access the 224 screen (RF Port Status).
   - Type .Z to zero test values.
   - Type .M to monitor.

   You should see the numbers incrementing in the bytes and frames row, reflecting transmission of frames back and forth between base and sub. Wait at least 30 seconds to get an accurate reading.
6. In the errors column on the lower left of the screen, total the sum of the errors. The sum should be less than 1% of the total number of frames received (in the "IN" location). To terminate the test, return to the "Base" screen, access screen 224, and change **Test to Run** to Terminate.
7. Go to the other screen ("Base").
8. Access the 224 screen (RF Port Status).
   - Press .Z to zero the data.
   - Press .M to enter monitor mode. Wait at least 30 seconds to get an accurate reading.
   - In the errors column on the lower left of the screen, total the sum of the errors. The sum should be less than 1% of the total number of frames received (in the "IN" location). To terminate the test, access screen 224, and change **Test to Run** to Terminate.

Step 5: Configure the SkyWay for Installation

To complete the configuration process, go to "Chapter 5: Configuring and Managing SkyWay" on page 57.

Chapter 4: Installing Skyway

Once you have performed a successful bench test and configured the units to your satisfaction, you are ready to install and connect them.

This chapter contains the following information:

Mounting the SkyWay Unit 42

Mounting to a Mast..... 42

Mounting to a Wall 44

Setting Up the Antenna..... 45

Grounding Skyway and the Antenna..... 47

Connecting Cabling 48

Connecting an Antenna 49

Connecting to Power 50

Connecting to the Administration Console..... 51

Connecting to Your LAN 53

Routing Connected Cables 48

Mounting the SkyWay Unit

Mount The SkyWay Bridge/Router to an outdoor mast or wall.

Mounting to a Mast

Tools:

- 13 mm hex socket wrench
- Slotted screwdriver

To mount the SkyWay to a mast:

1. Place the mast-mounting bracket on a table with the flat side down.

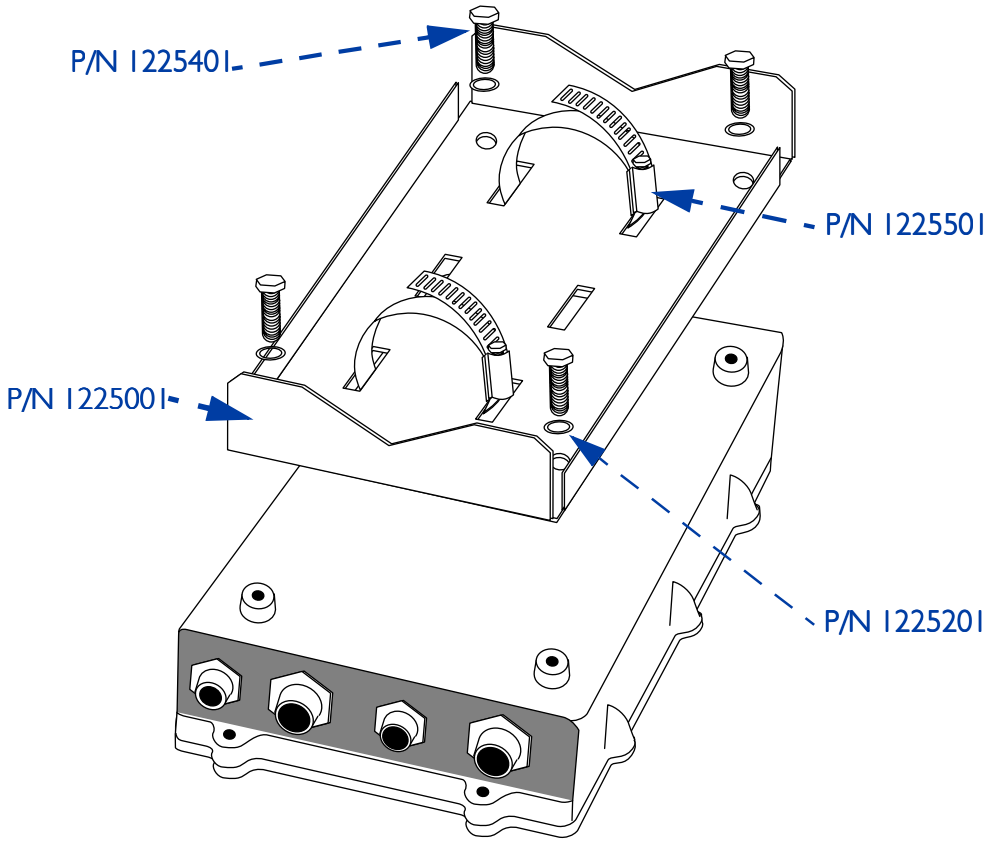

Use the third central pair of slots for seating a third clamp if you want extra clamp security.

2. Thread two clamps into the outside pair of slots on the bracket. Make sure to thread them in the same direction.
3. Place the SkyWay face down. Place the bracket and clamp assembly over the rear of the SkyWay so that the four mounting holes align.
4. Place one spring lock washer (P/N 1225201) on each mounting bolt.
5. Using a 13 mm hex socket wrench, tighten a bolt and washer into each hole of the bracket to a maximum torque of 15-20 ft-lbs (to prevent stripping).

6. Position the bracketed SkyWay against the mast with the connectors facing downward.

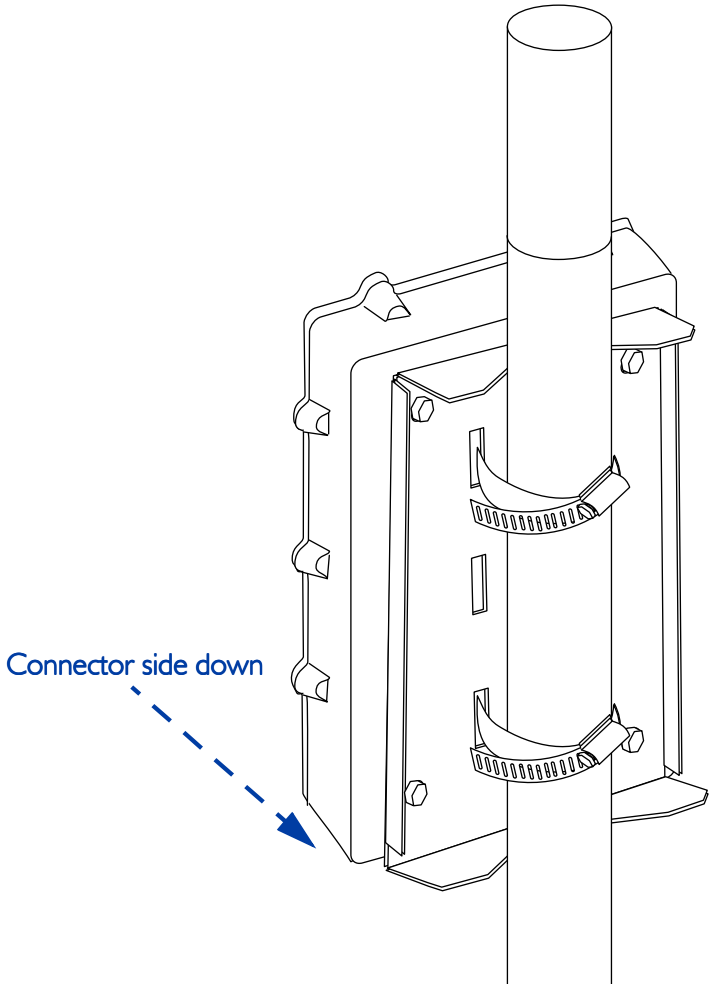

Note: The mast should be a minimum of 1 in. (25.4 mm) outside diameter.

7. Feed the end of each clamp around the mast into the locking mechanism at the other end. Using a slotted screwdriver or nut driver, tighten the clamp screws to a maximum torque of 45 ± 5 in-lbs.

CAUTION: The mast to which you mount the Skyway and/or antenna should be grounded. If the mast is not grounded, see "Grounding Skyway and the Antenna" on page 47.

Mounting to a Wall

The wall mount kit is optional and may be purchased separately.

Tools:

- 13 mm wrench

1. Place the SkyWay face down.
2. Align the two brackets over the SkyWay unit's bolt holes, either along the length or width of the unit.

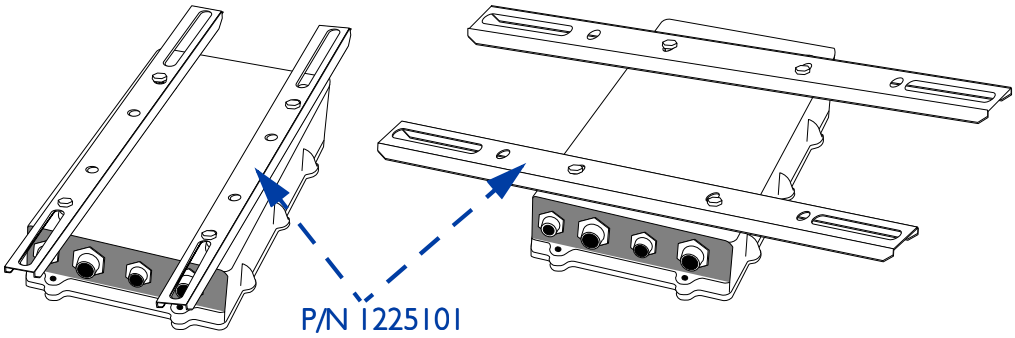

3. Insert bolts and tighten with a 13 mm wrench.

Note: The bolts can be found in the Mast Kit, which is always shipped with SkyWay.

4. Fasten the SkyWay to the wall using the slider slots and bolts (not supplied), making sure the SkyWay's connectors face downward.

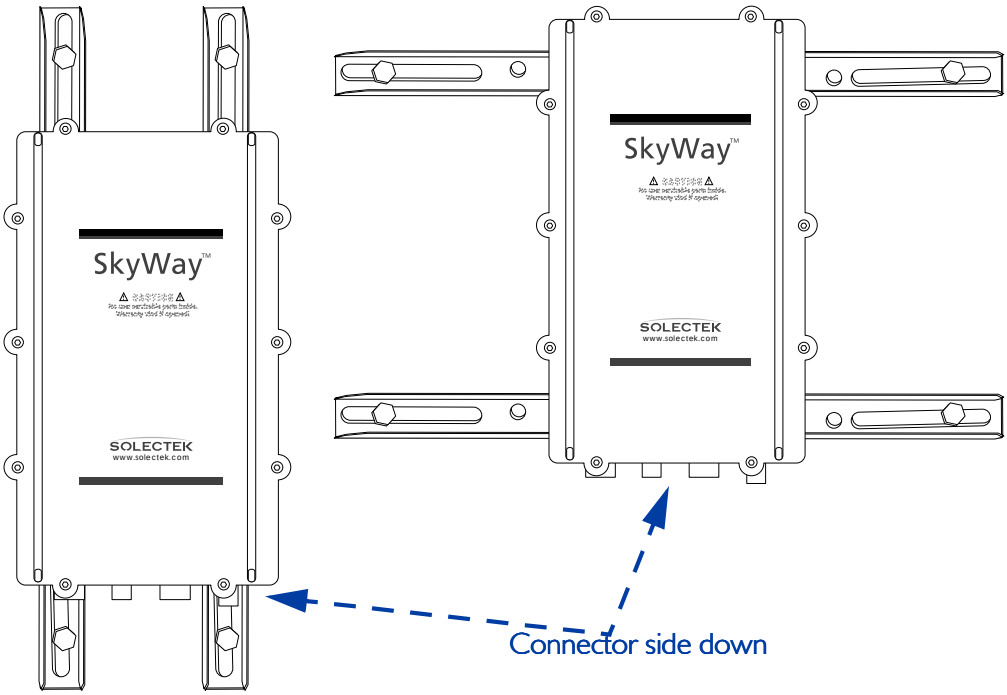

CAUTION: The surface to which you mount the Skyway and/or antenna should be grounded. If the surface is not grounded, see "Grounding Skyway and the Antenna" on page 47.

Setting Up the Antenna

Skyway requires an RF antenna to receive and transmit signal effectively.

Selecting the Antenna

Solectek supplies one of several different antennas, including both sectoral and omni models. Solectek's systems engineers will assist you with antenna selection, taking into account factors such as usage (point-to-point or multi-point), distance to substations, and interference from nearby antennas.

Apart from the two omnidirectional antennas (7002301 6 dBi and 7002401 11 dBi), all Solectek antennas are designed to be used as bridge antennas between two networks or for point-to-point communications in the ISM band (2.4 GHz) only.

Before You Mount the Antenna

Follow these guidelines before and during installation of the SkyWay antennas:

1. Avoid reflective environments: Where possible, avoid mounting antennas in a "reflective environment" (i.e., near objects that can reflect radio energy back to the antenna). Signal reflections from nearby objects are seen as noise by radio transceivers, and can adversely affect the range or quality of your wireless link. Examples of such objects include the following:
   - Trees or bushes
   - Buildings
   - Air conditioning units and ductwork
   - Other radio antennas
   - Building structures made of any material such as steel, brick, or wood
   - Construction vehicles and equipment
2. Follow precise and safe handling procedures:
   - Do not perform antenna installation by yourself. Some antennas are large and hard to handle, especially when changing polarity or performing the final mounting on the mast. You need a second person to align the antenna, so try to schedule as much antenna work as possible when at least two workers are available.
   - Use a bubble level (carpenter's level) to make sure all antennas are level with the horizon. See Appendix K for details related to specific antennas. For antennas mounted to the wall, you may need additional spacers or washers to obtain a level installation.

3. **Mount antennas securely:** A small movement of the antenna caused by an insecure mount or weak mast results in a huge sweep at the other end of the link miles away.
   - Make sure the antenna is bolted securely to the mast.
   - Always use appropriate guy wires (see your local building codes for recommendations and requirements).
   - Weight non-penetrating roof mounts securely with concrete blocks or other ballast.
4. **Handle the antenna RF cable carefully:** Maintain a 12-inch bend radius if possible. Do not walk on or kink the cable. A kinked cable causes severe signal attenuation, and can cause the link to fail.

Mounting the Antenna

Connect one of the available antennas to the mast using the appropriate clamping or bolting apparatus. For more information, see "Appendix K: Skyway Antennas" on page 213.

Grounding Skyway and the Antenna

Warning: Ungrounded or improperly grounded antennas constitute a hazard to personnel and equipment. A lightning strike on or near an improperly grounded antenna can cause severe injury or death as well as equipment destruction. Any Solectek equipment damaged by lightning is considered to have been damaged by an Act of God, and is not covered under warranty.

Solectek antennas (2.4 GHz) and the SkyWay Bridge/Router do not require additional grounding when mounted on antenna masts that are properly grounded per local electrical and building codes.

Supply grounding if the SkyWay and its antenna are mounted on a non-penetrating roof mount, a wall, or an ungrounded wooden mast. In these cases, attach one end of a bond wire to one of the bolts on the SkyWay bracket. Attach the other end to another mast (properly grounded), a building ground, or an NEC ground.

Connecting Cabling

The SkyWay connects to the antenna by means of a LMR-400 RF cable.

The SkyWay connects to power and to the terminal, terminal emulator or LAN by means of three cables:

- power
- console
- data (Ethernet copper or fiber)

The three cables route into the building.

Routing Connected Cables

Before you begin connecting the SkyWay, consider where the cables should be routed. within the building. SkyWay's design enables you to route each cable to its most logical/convenient location. These locations may not be in the same room or even on the same floor. For example, it may make the most sense to route the power to a utility room on the top floor, the console to a secured room on the second floor, and the Ethernet to your LAN room on the first floor:

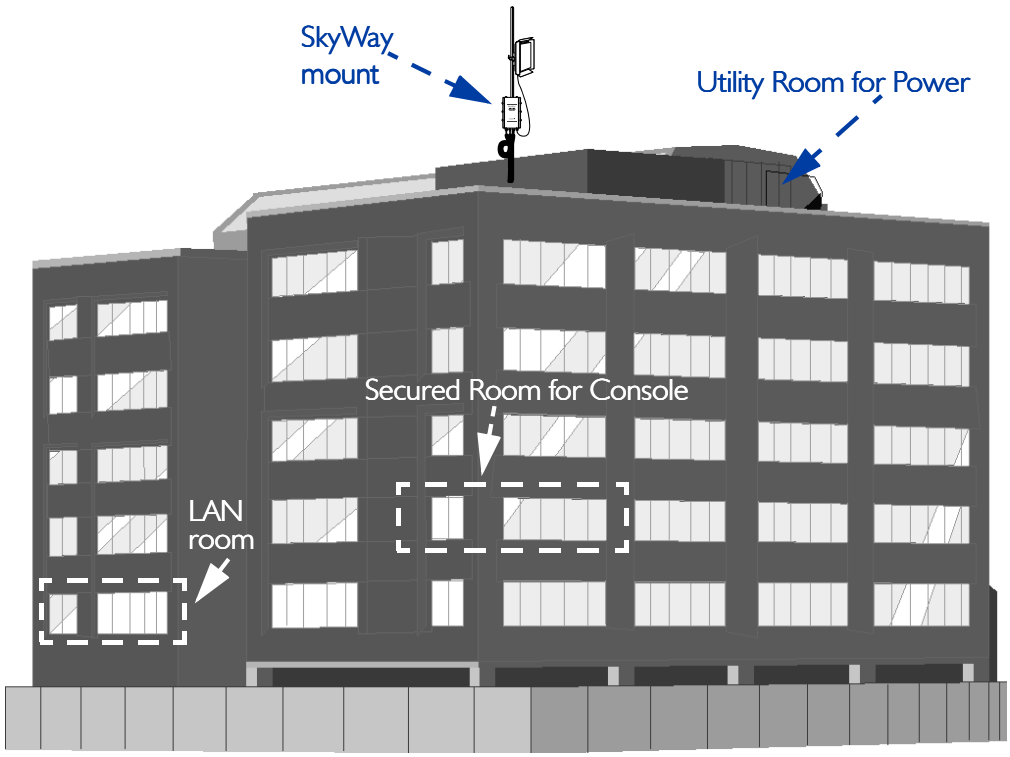

The length of the cables you ordered determines the maximum distance for each connection.Be sure to secure the cables to the mast at intervals to protect the cables and the connection.

Connecting an Antenna

The LMR-400 RF cable connects the SkyWay with the antenna above it on the mast.

To connect an RF cable:

1. Making sure the threads are properly aligned, tighten the cable's connector bolt snugly over the SkyWay's RF connector port using a 13/16 in wrench. Hand-tighten another 1/4 turn to lock it in place.
2. Similarly connect the other end of the RF cable to the antenna's connector.

Note: Allow sufficient slack in the cable for a maximum turning radius of 1 ft.

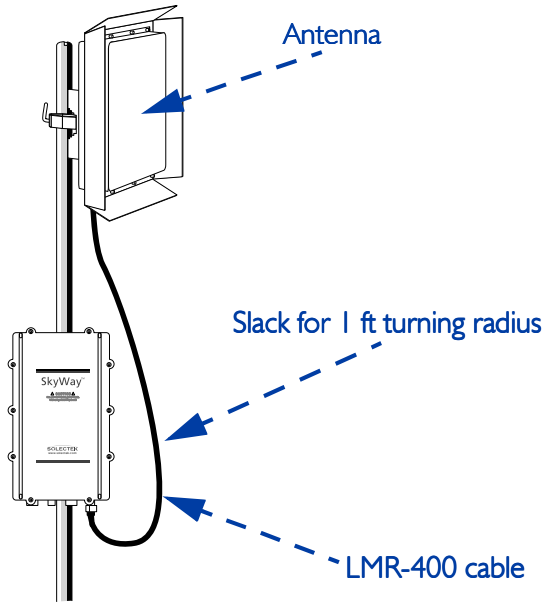

3. Seal the connections to both the antenna and the SkyWay with "Coax Seal" (P/N 10702) to prevent water entry.

Connecting to Power

SkyWay requires DC power to operate. Solectek supplies an AC-to-DC converter and a weather-rated DC power cable.

To connect SkyWay to power:

1. Connect the power cable's 3-pin connector to the SkyWay power port. Plug in and lock clockwise.

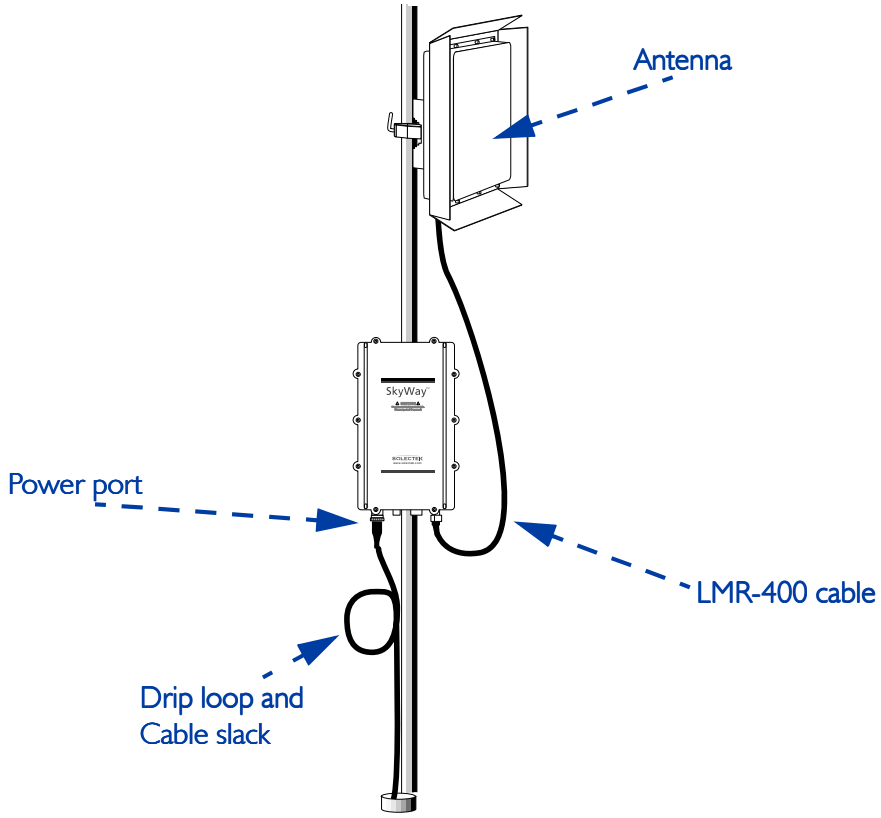

2. Connect the opposite (indoor) end to the supplied AC/DC converter.

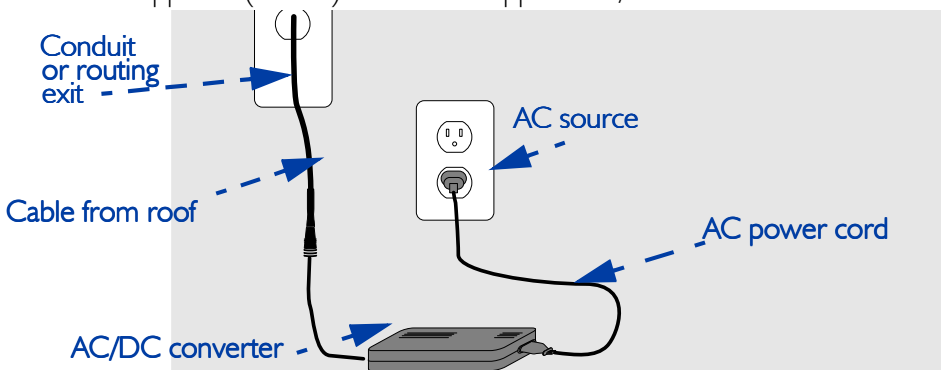

Note: For extra power protection, plug the AC power cord into a UPS (200 W minimum).

Connecting to the Administration Console

Use this connection to:

- make and apply configuration settings to the unit
- monitor performance
- obtain transmission statistics

Solectek supplies an RS-422 weather-rated cable and an RS-422-to-RS-232 converter for connecting to a serial communications port on the console or modem.

Connect a terminal directly to the unit's RS-422 port to provide secure access for a single console.

Note: You can use a modem to provide remote console access to all of SkyWay's configuration features. You may also use SNMP Manager on a workstation connected to the LAN to access most of Skyway's configuration objects. For security reasons, however, not all SkyWay's features are available using SNMP.

To connect directly to a administration console:

1. Connect the console cable's 6-pin connector to the SkyWay console port. Plug in and lock clockwise.

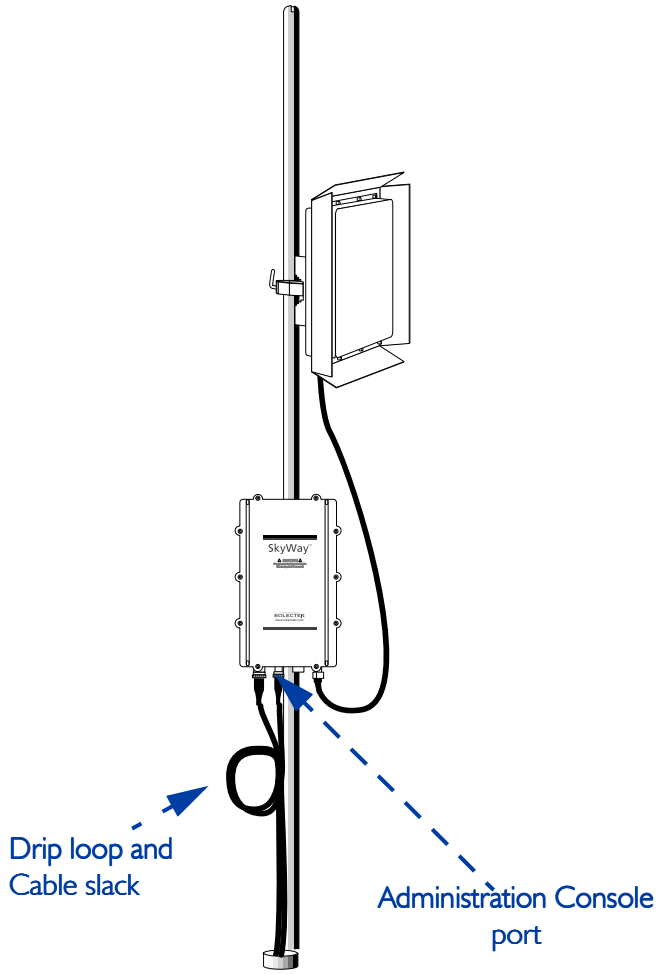

2. Route the cable to the console, being sure to create a drip loop.
3. Connect the cable at the opposite (indoor) end of the console cable (DB-9 connector) to the RS-422 converter, then to the serial communication port on the console terminal or terminal emulator.

To connect to a dedicated modem and data line:

1. Connect and route the console cable as described above, except that you will connect the cable to a modem, rather than the terminal or terminal emulator.
2. Connect a standard phone cable from the modem to the dedicated data line wall jack. For more information on configuring the modem and accessing the SkyWay remotely, see "Accessing the SkyWay Bridge/Router" on page 22.

Connecting to Your LAN

Connect the SkyWay to your LAN via copper or fiber optic cable.

Copper cable. The 10 Base-T/100 Base-TX (twisted pair) cable is available in 100, 200, and 300 foot lengths. This cable is terminated on the indoor side with a standard RJ-45 connector and is intended to be connected to an Ethernet hub or switch. If a cable length of longer than 300 feet is needed, you must order the SkyWay configured to use a fiberoptic LAN connection. See "Fiberoptic cable" on this page for more information.

Fiberoptic cable. Fiberoptic cable is available in longer lengths. Fiberoptic cable transmission is not affected by the noise that can affect a copper cable, because electrical transmission is converted into optical transmission. This cable is terminated on the indoor side with a standard S/C fiberoptic connector and is intended to be connected to a fiberoptic port on an Ethernet hub or switch.

To connect an Ethernet cable:

1. Connect the Ethernet cable's 8-pin connector (10 Base-T/100 Base-TX) or 2-pin connector (100 Base-FX) to the Ethernet port. Plug in and lock clockwise.

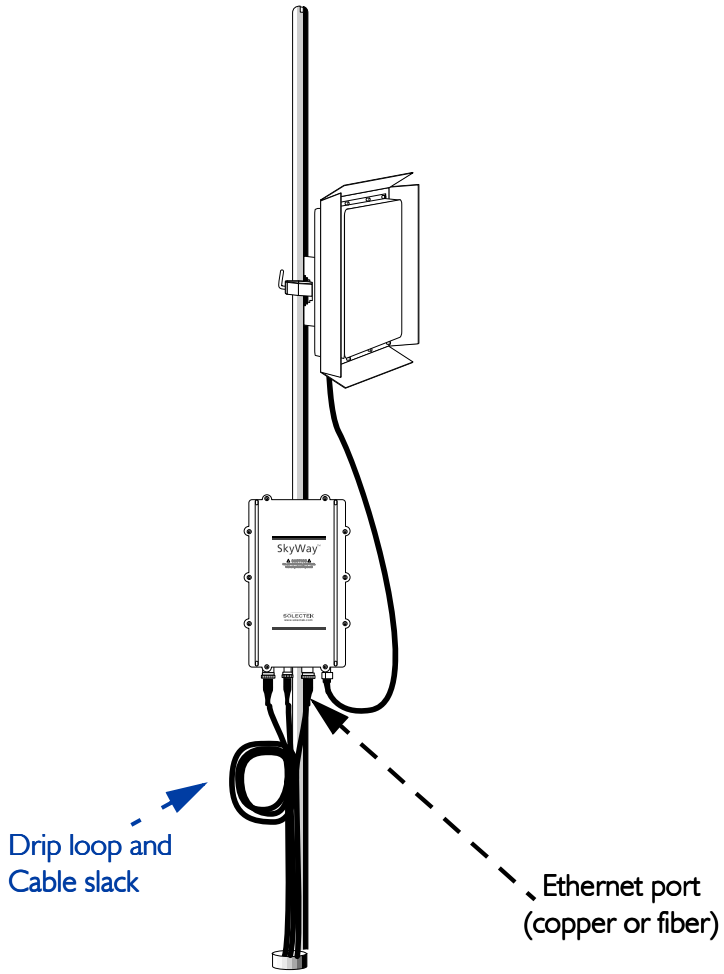

2. Route the cable to the console, being sure to create a drip loop.

3. Connect the opposite (indoor) end of the Ethernet cable to the appropriate Ethernet port (RJ-45 or S/C) on your LAN hub or switch.

Antenna Alignment and RF Link Verification

Once the system is installed and the antennas are mounted, you must ensure that you have proper antenna alignment to maximize the efficiency of your RF Links. To verify that the original antenna placement was satisfactory to bring up the RF link before starting, use the 2.5.2 RF-DLC Sub Port Status screen (described on page 143). If not, check the azimuth settings from your design and realign the antennas. Once you have established a link, you can utilize the ICMP Ping Utility located on the 3.2 screen (described on page 109) to help establish your baseline settings as viewed in the 2.5.4 RF-DLC Signal Status screen (described on page 147).

Note You will need two people for this operation.

1. At the base station configure ICMP for the IP address of the substation you are going to align.
2. Set the payload size to “64”.
3. Set the Maximum Number of Packets to “9999999”.
4. Set Delay between Packets to “0”.
5. Set Ping Operation to “Start Ping”.
6. Press .W to initiate the process.

At the base station, monitor the 2.5.4 RF-DLC Signal Status screen. Have the other person adjust the sub station antenna while you monitor the link for the largest SL value and the fewest number of Time-outs.

Once you have the best values you can acquire, record these readings. Then repeat the above steps for each sub station in the cluster.

Chapter 5: Configuring and Managing SkyWay

You can access the SkyWay Bridge/Router locally or remotely for configuration and management. The local console provides a menu-based user interface you can use to set up all of the SkyWay's configuration features and to run diagnostics.

This chapter gives you step-by-step procedures for configuring the SkyWay Bridge/Router for your implementation.

This chapter contains the following information:

Setting System Configuration Parameters 59

Understanding RF-DLC 65

Configuring the Ports 69

Bridging 88

IP Routing 93

Internet Control Message Protocol 102

SNMP 103

Diagnostics 104

File Transfer Utilities 112

Security 123

Configuring SkyWay

SkyWay configuration can be divided into this sequence:

- Configuring System, Network Management, and User parameters
- Configuring the Port Parameters, which includes the RF Link Layer
- Configuring for Bridging and Spanning Tree
- Configuring for IP Routing

For many of the parameters, you can simply accept the default values. In this Guide, each configuration parameter is described in a table following the screen. The table includes the field name, MIB OID, and valid configuration settings, with the default setting in bold if applicable.

Configuration Features Available

The following table provides an overview of the configuration features available from both the Administrative Console and SNMP for each of the SkyWay's major functions:

Function	Console	SNMP	Comment
Network Management System, Date and Time	X	X	Allows you to configure the network management system, date and time.
Network Management Security, Adding Users	X		Screens 1.1.1 Network Management Security and 1.1.3 User Access Configuration Menu are not accessible via SNMP.
Port Configuration	X	X	Allows you to configure the serial port, Ethernet port, RF ports, and manually accept sub stations.
Configuring for Bridging	X	X	Allows you to configure bridging and spanning tree operations.
Configuring for Routing	X	X	Allows you to enable and configure IP routing
Configuration Summary	X	X	Allows you to obtain a summary of system configuration, bridge configuration, and router configuration.

Setting System Configuration Parameters

SkyWay's system parameters fall into four main areas:

- Network Management Security
- Network Management System
- User Access
- General Parameters

Setting Network Management Security Parameters

Use screen 1.1.1 to set up security parameters for network management. To access this screen, you must have an access level of Super. This screen is not accessible via SNMP.

1.1.1 Network Management Security Configuration

```
        1.1.1. Network Management Security Configuration

Network Management Configuration:
---------------------------------
  Read Community Name           :  public
  Write Community Name          :
  Trap Community Name           :
  Enable Traps                  :  No
  Authentication Traps          :  No
  NMS IP Address 1              :  000.000.000.000
  NMS IP Address 2              :  000.000.000.000
  Trap Destination IP Address 1 :  000.000.000.000
  Trap Destination IP Address 2 :  000.000.000.000




\ - return to menu    . - commands    TAB - next available field    ENTER - edit
```

The following table lists the field name and settings (there are no MIB OIDs for this screen):

Field Name	Settings (default in bold)
Read Community Name	public
The read-only community name of the SkyWay agent. Must match community name configured on the Network Management Station (NMS).	
Write Community Name	
The read-write community name of the SkyWay agent. Must match community name configured on the NMS.	

Field Name	Settings (default in bold)
Trap Community Name The trap community name of the SkyWay agent. If you set Enable Traps to Yes and the NMS expects SNMP traps with community name, this field must match community name configured on the NMS.	
Enable Traps Set to Yes to enable SkyWay to log and transmit SNMP traps. Set a Trap Destination Address to send traps to the NMS.	• **No** • Yes
Authentication Traps Set to Yes to cause a trap when an SNMP packet is received with an incorrect community name.	No
NMS IP Address 1 The IP address of the first NMS. This address setting is optional when using a NMS. This provides an extra layer of security by forcing the IP addresses to match.	
NMS IP Address 2 The IP address of the second Network Management station. This address setting is optional when using a NMS. This provides an extra layer of security by forcing the IP addresses to match.	
Trap Destination IP Address 1 The IP address of the first NMS to receive SkyWay SNMP traps. Enable Traps must be set to Yes.	
Trap Destination IP Address 2 The IP address of the second NMS to receive SkyWay SNMP traps. Enable Traps must be set to Yes.	

Setting Network Management System Parameters

Use screen 1.1.2 to set up the system parameters for network management.

1.1.2 Network Management System Configuration

```
        1.1.2. Network Management System Configuration

System Description   :  Solectek Corporation SkyWay
System Contact       :
System Name          :
System Location      :

\ - return to menu    . - commands    TAB - next available field    ENTER - edit
```

Field Name	MIB	Settings (default in bold)
System Description	sysDescr	Solectek Corporation SkyWay
A read-only field describing the entity.		
System Contact	sysContact	
This is an optional field where you can specify the person to contact, plus phone, pager, or email information.		
System Name	sysName	
This is an optional field where you can specify the name of this unit. It appears on the Login screen.		
System Location	sysLocation	
This is an optional field where you can specify the physical location of this unit. It appears on the Login screen.		

Adding Users and Setting Access Levels

To access this screen, you must have an access level of Super. This screen is not accessible via SNMP.

1.1.3.1 Add a User

```
        1.1.3.1. Add a User

User             :
Password         :
Confirm Password :
User Level       :  Standard

Current number of users:  2



\ - return to menu    . - commands    TAB - next available field    ENTER - edit
```

Field Name	
User A 16-character field where you can enter a user name. This field is case-sensitive.	
Password A 20-character field where you can enter the user's password. This field is case-sensitive.	
Confirm Password Use this field to confirm the password.	
User Level Super users can enter security screens and create other users.	• Standard • Super
Current Number of Users The total number of defined users in the database.	

Displaying a List of Users

Use screen 1.1.3.2 to see a list of users and their access levels. To access this screen, you must have an access level of Super. This screen is not accessible via SNMP.

1.1.3.2 Users

```
        1.1.3.2. Users                                        Record 1 of 2

 User               Password           Confirm Password    Level     Status
 ----------------   ----------------   ----------------    --------  -------
                                                           Super     Valid
                                                           Standard  Valid

\ - return to menu    . - commands    TAB - next available field    ENTER - edit
```

Field Name	Settings (default in bold)
User Name of the user.	
Password The user's password.	
Confirm password A confirmation of the user's password.	
Level Access level for this user.	• **Standard** • Super
Status Indicates if this user is currently a valid user.	• **Valid** • Invalid

Setting the System Date and Time

Use 1.1.4 General Parameters Configuration to set the system date and time.

1.1.4 General Parameters Configuration

```
       1.1.4. General Parameters Configuration

Date        :  10 Feb 2000
Time        :  14:24:36

\ - return to menu    . - commands    TAB - next available field    ENTER - edit
```

Field Name	MIB	Settings
Date	swCurrDay, swCurr-Month, SwCurrYear	
The system date in DD-MMM-YYYY format.		
Time	swCurrTime	
The system time in HH:MM:SS format.		

Understanding RF-DLC

The following is a discussion of the RF-DLC protocol, which provides you with background information before you begin configuration.

The RF-DLC Protocol

RF-DLC is a proprietary protocol based on the HDLC protocol. It is a polling protocol for star-based networks with a base station and one or more substations, and participates in transmitting frames from one station to another. The base station controls communications with each sub station and maintains the RF link. The base station communicates with one sub station at a time. The sub stations communicate only with the base station and not with each other.

In the following diagram showing a point-to-multipoint configuration, the base station communicates with the sub stations in a star topology.

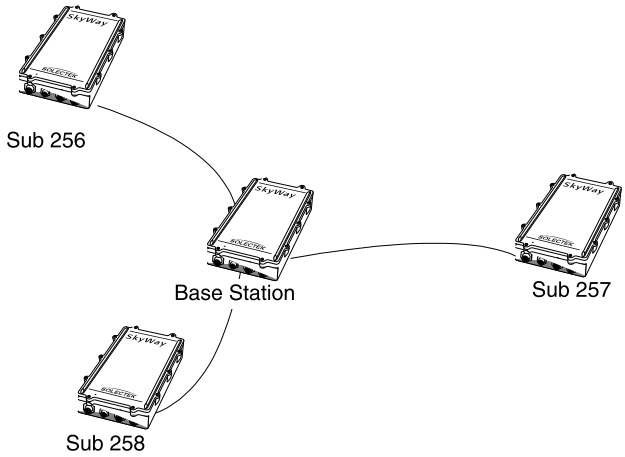

In a point-to-point configuration, there is one base station and one sub station.

Automatic Discovery Protocol

When a sub station begins operation, it can receive packets but may not be able to fully communicate with the base station until the base station is configured to recognize it. RF-DLC uses another protocol called Automatic Discovery Protocol (ADP) to learn about a sub station and begin communicating with it. Once the base station assigns a sub-station number to the sub station, the base station then uses the RF-DLC protocol to continue communications.

Enabling ADP

The base station is enabled for ADP on the RF-DLC base port by default. With ADP enabled, the base station can use ADP to identify and set up an unassigned sub station. The discovery process is outlined below.

With ADP enabled, you must choose the ADP mode, which specifies how the sub station handles broadcasts: either Auto Acceptance or Manual Acceptance.

- Using **Auto Acceptance,** the base station automatically accepts the sub station.
- Using **Manual Acceptance**, you must manually accept each sub station by enabling the *Accept Status* field (in "1.2.3.1.4 ADP Substation Configuration" on page 81) for that *Sub Station Number*.

Disabling ADP

When configuring the base station, you may choose to disable ADP, which can result in reduced overhead. If you disable ADP, you must manually assign the base sub ports for the sub stations by using 1.2.3.1.3 RF Base Sub Port Configuration, described in detail on page 80. to enter the *Sub-Station Number* and *IP address* information. On the sub station, you must also manually set up the RF sub ports, entering in the same *Sub-Station Number* in "1.2.3.1.2 RF Sub Port Configuration" on page 78.

If ADP is disabled, the ADP polling operation does not apply (see "ADP Discovery Process" on this page).

ADP Discovery Process

The discovery process is as follows when ADP is enabled:

- The base station is not yet aware of the sub station, and the sub station is waiting for an ADP request from the base. The base station sends out a broadcast request at the broadcast address of 255.
- The sub station replies to the broadcast with its IP address.
- The base station sends another broadcast to assign the station address (Sub-*station Number*). The base station assigns the next available address to the sub station. This is the base sub port address for the sub station in the range of 256 to 512.
- The base station can now communicate with the sub station using RF-DLC frames:

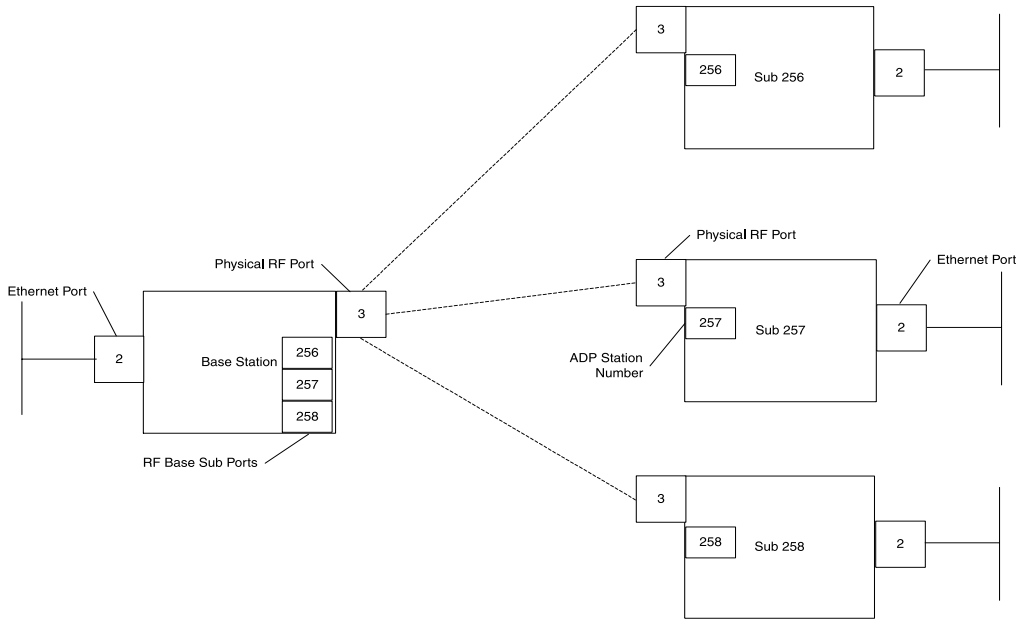

RF-DLC Frame Types

RF-DLC frames contain an address field which defines the sub station address, broadcast address, or group address. RF-DLC frames also contain a control field containing commands, responses, and counts used to maintain the link. The control field formats are:

- Unnumbered - used to initialize the sub station and send information using an unreliable mechanism.
- Supervisory - used to acknowledge the receipt of information frames, convey ready or busy conditions, and report frame numbering errors.
- Information Transfer - used to transfer data using a reliable mechanism. Information frames are numbered, meaning the control field contains Ns counts, which ensure frames are received in their proper order, and Nr counts, which confirm that information frames were received and accepted.

The RF-DLC frame also contains a CRC bit for error checking.

RF-DLC Commands and Responses

The base station sends a command to the sub station, which sends back a response. Commands and Responses are of Unnumbered, Supervisory, or Information format.

Note The 2.5.1 Base Port Status screen provides the status of frame activity. For descriptions of RF-DLC commands and responses, see 2.5.1 RF-DLC Base Port Status, described in detail on page 140, and 2.5.2 RF-DLC Sub Port Status, described in detail on page 143.

Polling

The base station polls the substations one at a time to see if they have packets to send to the base station.The base station manages three poll lists to which it assigns devices, based on their activity:

- Substations on the **Fast Poll** list are constantly being polled one at a time in order by the base. The polling frequency is contingent upon the number of substations.
- A substation drops to **Slow Poll** if it does not respond to the base station in 4 times with no response. A sub can also drop to Slow Poll if it responds with “n” RRs and there is no data in either direction.
- A substation drops to **Inactive Poll** if either of the following events occurs:
  - While being on Slow Poll, the sub does not respond to the base in 8 tries.
  - It is the only sub station to respond to the base with RR responses and no data in either direction.

Consider a base station with three sub stations on the fast poll list, two substations on the slow poll list, and one on the inactive poll list. The slow poll timer is set to one

minute and the inactive timer is set to five minutes. The slow poll timer's value is always less then that of the inactive timer.

The base station polls the fast poll sub stations until one minute has passed. Then it polls the sub stations on the slow poll list, then moves back to poll the fast poll sub stations, and continues in this fashion until five minutes has passed. The base station then polls the inactive sub station and always broadcasts an ADP packet, if ADP is enabled.

Error Detection and Recovery

I-frames (data frames) can contain several Bridged-Ethernet frames or routed IP datagrams. They are sequence numbered: Ns is the frame number, Nr is an ACK, meaning all frames 'r' were received.

If the base station gets an I-frame out of sequence, it assumes one was missed and sends out a reject packet. Errors are handled as follows:

- If Ns gets ahead by one, the packet is rejected. The other side retransmits.
- If Nr changes and a frame is acknowledged but was not sent out, the base sends back a disconnect to the sub station, or the sub station sends a FRMR (Frame reject response) to the base station. This is a logical disconnect, the RF physical link is maintained.
- The sub station resets and the base makes an attempt to re-establishes the RF-DLC session on the next polling cycle.

Configuring the Ports

How you configure the SkyWay Bridge/Router depends on your network topology. Configure each unit separately depending on its role as a base station or sub station, and its function as a bridge, router, or both bridge and router.

Note Serial Port configuration is discussed in Chapter 2 (see "1.2.1.1 Serial Port Configuration" on page 24).

Before you Begin

The following helps you determine how to configure the unit:

1. Decide if the unit will be a base station or a sub station.
2. Decide if the unit will perform bridging, routing, or both bridging and routing. The default configuration is bridging enabled, routing disabled.
3. If you are configuring the unit for routing, have the IP configuration data ready (IP address, IP Mask, etc.).

When you make changes to the screens and type .W, you update the configuration database. However, for some changes, such as configuring the RF ports, you must cycle the port to start the new configuration. This is described in "Configuring the SkyWay as a Base Station" on page 69.

Obtaining IP Addresses

IP network addresses are unique numbers assigned by the Internet Assigned Numbers Authority (IANA) (see RFC 2050). See your system manager to obtain IP addresses. If your network is not connected to the Internet directly or indirectly, see RFC 1918, which defines class C addresses in the range of 192.168.0.0 - 192.168.255.0 that you may use.

Setting up IP Addresses

Each unit, whether a base station or a sub station, must have a unique IP address for the RF port, even if you are enabling bridging only. The system derives the RF MAC address from the RF IP address. If you are enabling routing, you also need to set up the IP address for the Ethernet port (for more information, see "1.4.2 IP Port Configuration" on page 95).

Configuring the SkyWay as a Base Station

1. Set up a unique IP address for the RF Port.
   a. Go to screen 1.4.2 IP Port Configuration, described in detail on page 95.
   b. For Port # 3 (the RF port), enter the IP Address and the IP Mask.
   c. Press .W to update the database.

2. Configure the RF Transceiver settings: RF Frequency, RF Data Rate, and Scrambler Tap Values.
   a. Go to screen 1.2.3.3 RF Transceiver Configuration, described in detail on page 72.
   b. Set the RF Frequency, RF Data Rate, and Scrambler Tap values.
   c. Press .W to update the database.
3. Invalidate the RF Diagnostics Port configuration. As shipped, the default RF port is the RF-DLC Sub Diagnostics Port. You must invalidate it before setting the RF port up as a base port.
   a. Go to 1.2.3.2 RF Diagnostic Port Configuration, described in detail on page 73. The port number is *3*, and the port type is *Sub Diag*, which is the default.
   b. Set the Record Type field to *Invalid.*
   c. Press .W to remove this configuration record from the database.
4. Configure the RF port as a base port.
   a. Go to 1.2.3.1.1 RF Base Port Configuration, described in detail on page 74.
   b. Press .A. This automatically adds port 3 as a base port. The fields now contain the default settings.
5. Accept the defaults or change the base port configuration settings:
   - Configuration Status - You might want to set this *Off-line* to complete configuring all your units, then change the configuration status of all units to *On-line* before rebooting (see step 5).
   - Max Buffers - these are the message buffers for the system.
   - Transmit and Receive Buffers - these are shared between the serial and RF ports. There are 512 total.
   - Maximum Frame Size - The physical MTU (not configurable).
   - Slow Polling Timeout - number of seconds that elapse before the base station checks the sub stations on the slow poll list.
   - First Sub Station Number - logical address of the first sub station (default is 256).
   - Last Sub Station Number - logical address of the last sub station in the topology.
   - Automatic Discovery Protocol - if enabled, the base station uses ADP to send broadcasts to the sub stations. You must also configure the ADP mode. If disabled, ADP mode does not apply, there fore you must manually configure the base station for the base sub ports (see "Configuring the Base Sub Ports" on page 80).

- ADP mode - applies only if Automatic Discovery Protocol is enabled. *Auto Acceptance* is the default. If you set ADP mode to *Manual Acceptance*, you must configure the base station to manually accept the sub stations.
- ADP Timeout Interval - applies only if Automatic Discovery Protocol is enabled.

When finished setting the base port configuration, type .W to update the database.

6. Initialize the RF port. At this point, you have made the changes to the database, but before the changes take affect, you must initialize the port. There are two ways to do this:

- Cycle the port:
  a. Go to 2.2.1 Generic Port Status and Control.
  b. Type 3 (or .N until the port number is 3).
  c. Set the Administrative Status field to *Cycle*.
  d. Type .W

Cycle evacuates the port, eliminates the driver, reads the database, reinstalls the driver, and brings up the port.

- Reset the unit:
  a. Go to the Main Menu
  b. Type 5 (Start Application).
  c. Choose *Run Time* as the Application to Start.

  This reloads the updated database containing the new configuration parameters.

You can configure only one base station, but you can configure as many as 64 sub stations.

1.2.3.3 RF Transceiver Configuration

Use this screen to set RF Frequency, RF Data Rate, and Scrambler Tap values.

```
1.2.3.3. RF Transceiver Configuration                Record 1 of 1

 RF Port      RF Frequency    RF Data Rate     Scrambler Tap
 -------      ------------    ------------     ------------
 3            2468 Mhz        2 Mbps           72

\ - return to menu    . - commands    TAB - next available field    ENTER - edit
```

Field Name	MIB	Settings (default in bold)
RF Port	[swRFTransCfgIndex]	3
The RF port number is 3.		
RF Frequency	[swRFTransCfgFrequency]	2468 Mhz
The transmitted and received frequency for this SkyWay. This setting must match all other stations communicating with this SkyWay.		
RF Data Rate	[swRFTransCfgDataRate]	• 2 Mbps • 5.5 Mbps • 11 Mbps
This setting must match all other stations communicating with this SkyWay.		
Scrambler Tap	[swRFTransCfgScrambler-Tap]	72
Determines how the SkyWay scrambles data between two units. This setting must match all other stations communicating with this SkyWay.		

RF Diagnostics Port

There are two diagnostic ports, the RF-DLC Base Diagnostic port and the RF-DLC Sub Diagnostic port. Both of these use the control interface of the RF driver to perform RF diagnostics.

1.2.3.2 RF Diagnostic Port Configuration

```
1.2.3.2 RF Diagnostic Port Configuration            Record 1 of 3

 Port Number                  :3

 Configuration Status         :On-line
 Port Type                    :RF-DLC SUB Diagnostic Port
 Max Buffers                  :800
 Transmit Buffers             :240
 Receive Buffers              :180
 Maximum Frame Size           :1549

 Record Type                  :Valid



\ - return to menu    . - commands    TAB - next available field    ENTER - edit
```

The following table lists the field name, the MIB name, and field options with the default setting in bold:

Field Name	MIB	Settings (default in bold)
Port Number The RF port number.	[swRFDiagPortIndex]	3
Configuration Status Determines if this port is initialized upon reset. Off-line prevents the port from being initialized upon reset.	[swRFDiagPortConfigSta-tus]	• On-line • Off-line
Port Type RF Sub Diagnostic port.	[swRFDiagPortPorttype]	RF Sub Diagnostics Port
Max Buffers The number of message buffers.	[swRFDiagPortMax-Buffers]	800
Transmit Buffers The number of transmit buffers.	[swRFDiagPortTransDesc]	240

Field Name	MIB	Settings (default in bold)
Receive Buffers	[swRFDiagPortRecvDesc]	180
The number of receive buffers.		
Maximum Frame Size	[swRFDiagPortmax-FrameSize]	3200
The physical MTU, or largest frame that can be transmitted. This field is not configurable.		
Record Type	[swRFDiagPort]	• Valid • Invalid
The status of this configuration.		

1.2.3.1.1 RF Base Port Configuration

```
1.2.3.1.1 RF Base Port Configuration                    Record 1 of 1

 Port Number                   : 3

 Configuration Status          : Off-line
 Port Type                     : RF-DLC Base Port
 Max Buffers                   : 800
 Transmit Buffers              : 240
 Receive Buffers               : 180
 Maximum Frame Size            : 3200
 Slow Polling Timeout-seconds  : 15
 First Sub Station Number      : 256
 Last Sub Station Number       : 287
 Automatic Discovery Protocol  : Enabled
 ADP Mode                      : Auto Acceptance
 ADP Timeout Interval-seconds  : 60


 Record Type                   : Valid

\ - return to menu    . - commands    TAB - next available field    ENTER - edit
```

The following table lists the field name, MIB, and settings with the default setting in bold. If only one setting is shown, it is the default:

Field Name	MIB	Settings (default in bold)
Port Number	[swRFBasePortIndex]	3
The RF port number.		

Field Name	MIB	Settings (default in bold)
Configuration Status	[swRFBasePortConfigStatus	• **Off-line** • On-line
Determines if the port is initialized upon reset. Off-line prevents the port from initializing upon reset.		
Port Type	[swRFBasePortPortType]	RF-DLC Base Port
This is a read-only field that defines this port as a base port.		
Max Buffers	[swRFBasePortMaxBuffers]	800
The number of message buffers allocated to this base port.		
Transmit Buffers	[swRFBasePortTransDesc]	240
The number of transmit buffers.		
Receive Buffers	[swRFBasePortRecvDesc]	180
The number of receive buffers.		
Maximum Frame Size	[swRFBasePortMaxFrameSize]	3200
This is a read-only field that sets the physical MTU, or largest frame that can be transmitted from this port.		
Slow Polling Timeout	[swRFBasePortSlowPollTO]	15 seconds
The slow poll time out interval in seconds.		
First Sub Station Number	[swRFBasePortFirstSubAddr]	256
The first possible sub station number.		
Last Sub Station Number	[swRFBasePortLastSubAddr]	287
The last possible sub station number.		
Automatic Discovery Protocol	[swRFBasePortADP]	• **Enabled** • Disabled
Determines if Automatic Discovery Protocol is running. If enabled, you must also specify the ADP mode.		

Field Name	MIB	Settings (default in bold)
ADP Mode	[swRFBasePortADP-Mode]	Auto Acceptance
Applies only if ADP is enabled. Auto Acceptance means the base station automatically accepts sub stations. Manual Acceptance means you must manually accept the sub stations (see "1.2.3.1.4 ADP Substation Configuration" on page 81).		
ADP Timeout Interval - seconds	[swRFBasePortADPTO]	60
Applies only if ADP is enabled. Determines how often (in seconds) the base stations sends an ADP broadcast.		
Record Type:	[swRFBasePortType]	• Invalid • Valid
Indicates the status of this base port configuration. If valid, this base port configuration is enabled. If invalid, this port is removed as a base port after the next reset.		

Configuring the SkyWay as a Sub Station

Configure the sub station in much the same way as you set up the base station. Configuration is simpler, however, because you do not have as many configuration parameters to set up.

1. Configure the RF Transceiver settings: RF Frequency, RF Data Rate, and Scrambler Tap Values. Make sure these settings correspond to the base station settings for these fields.
   a. Go to screen 1.2.3.3 RF Transceiver Configuration, described in detail on page 72.
   b. Set the RF Frequency, RF Data Rate, and Scrambler Tap values.
   c. Press .W to update the database.
2. Invalidate the RF Diagnostics Sub Port. As shipped, the default RF port is set to the RF diagnostics sub port. You must invalidate it before setting the RF port up as a base port.
   a. Go to 1.2.3.2 RF Diagnostic Port Configuration, described in detail on page 73. The port number is *3*, and the default port type is *Sub Diag*.
   b. Set the Record Type field to *Invalid* to remove this configuration record from the database.
   c. Type .W to update the database.
3. Configure the RF port as a sub port.
   a. Go to "1.2.3.1.2 RF Sub Port Configuration" on page 78.
   b. Press .A. This automatically adds port 3 as a sub port and allows you to begin editing the screen.
   c. Leave Max Buffers, Transmit and Receive Buffers at the default settings.
   d. Set the Sub-Station Number. This is the base sub port address; for example, 256. If ADP is enabled, you do not need to enter a sub-station number. If ADP is disabled, you must enter a station number. It is the next available RF Base Sub Port number determined during network setup.
   e. Set RF data rate to the same value as the base station.
   f. Set Link Down Timeout Interval (only if ADP is enabled). This timer specifies the amount of time in milliseconds the sub station can be inactive before going into ADP mode.
   g. Type .W to update the database.
4. Set up a unique IP address for the RF Port.
   a. Go to screen 1.4.2 IP Port Configuration, described in detail on page 95.
   b. For Port # 3 (the RF port), enter the IP Address and the IP Mask.
   c. Type .W to update the database.
5. Reset or cycle the port as described in step 5 of "Configuring the SkyWay as a Base Station" on page 69.

1.2.3.1.2 RF Sub Port Configuration

```
1.2.3.1.2 RF Sub Port Configuration                    Record 0 of 0

 Port Number                           :3

 Configuration Status                  :On-line
 Port Type                             :RF-DLC Sub Port
 Max Buffers                           :800
 Transmit Buffers                      :240
 Receive Buffers                       :180
 Maximum Frame Size                    :3200
 Sub Station Number                    :0

 Link down Timeout Interval (1.5 msec) :320

 Record Type                           :Valid





\ - return to menu    . - commands    TAB - next available field    ENTER - edit
```

Note Type .A to begin editing the screen.

Use this screen to set the sub station port parameters. The following table lists the field name, MIB, and the default, or field options with the default in bold:

Field Name	MIB	Settings (default in bold)
Port Number:	[swRFSubPortIndex]	3
The RF physical port number is 3.		
Configuration Status:	[swRFSubPortConfigSta-tus]	• **On-line** • Off-line
Determines if the port is initialized when a reset occurs. Set Off-line to prevent the port from initializing upon reset. Online initializes the port upon reset.		
Port Type	[swRFSubPortPortType]	Sub Port
This read-only field defines this port as a sub station port.		
Max Buffers:	[swRFSubPortMaxBuffers]	800
The number of message buffers allocated to this sub station port.		
Transmit Buffers:	[swRFSubPortTransDesc]	338
The number of transmit buffers.		
Receive Buffers:	[swRFSubPortRecvDesc]	140

Field Name	MIB	Settings (default in bold)
The number of receive buffers.		
Maximum Frame Size:	[swRFSubPortMaxFrame-Size]	3200
This read-only field sets the maximum frame size for each frame originating from this port.		
Sub Station Number	[swRFSubPortStation-Num]	0
Sub Station number for this sub station. If ADP is enabled, set this parameter to zero.		
Link Down Timeout Interval	[swRFSubPortLinkTO]	Seconds
The length of time this substation tries to link up to the base station.		
Record Type	[swRFSubPortType]	• Valid • Invalid
Indicates the status of this port configuration. If valid, this port configuration is enabled. If marked as invalid, after the next reset or port cycle, this port will not exist as a sub station port.		

Configuring the Base Sub Ports

If you have disabled ADP, you must manually configure the base sub ports on the base station using the 1.2.3.1.3 RF Base Sub Port Configuration screen. If you have ADP enabled, you do not need to configure base sub ports.

1.2.3.1.3 RF Base Sub Port Configuration

```
1.2.3.1.3 RF Base Sub Port Configuration              Record 1 of 1

 Sub Station Number                    :256

 Configuration Status                  :On-line
 Port Type                             :RF-DLC Base to Sub Port

 Corresponding Substation RF Port
 IP Address                            :000.000.000.000

 Record Type                           :Valid




\ - return to menu    . - commands    TAB - next available field    ENTER - edit
```

Note Type .A to add a base sub port and to begin editing.

The following table lists the field name, MIB, and the default or field options with the default setting in bold:

Field Name	MIB	Settings (default in bold)
Sub Station Number	[swRFBaseSubPortIndex]	256
The sub station number for this Base to Sub station port.		
Configuration Status	[swRFBaseSubPortConfigStatus]	• **On-line** • Off-line
Determines if the port is enabled during initialization (On-line). Set to off-line to disable the port.		
Port Type	[swRFBaseSubPortPortType]	RF-DLC Base to Sub Port
This read-only field defines this port as a RF-DLC Base to Sub station port.		
Corresponding Substation RF Port IP Address	[swRFBaseSubPortSubRFIPAddr]	000.000.000.000
The IP address of the sub station.		

Field Name	MIB	Settings (default in bold)
Record Type	[swRFBaseSubPortType]	• **Valid** • Invalid

Indicates the status of this RF Sub station port configuration. If valid, this port configuration is enabled. If marked as invalid, this record will be deleted after the next reset.

Validating Accept Status of a Sub Station

This section applies only if you set ADP mode to *Manual Acceptance*. Use screen 1.2.3.1.4 ADP Substation Configuration to validate the accept status for each sub station listed. The screen only shows sub stations that have not yet been accepted by the base station. Once they are accepted, they appear in screen 2.5.2 RF-DLC Sub Port Status, described in detail on page 143.

1.2.3.1.4 ADP Substation Configuration

```
            1.2.3.1.4 ADP Substation Configuration                    Record 1 of 1

 Sub Station           IP              Accept
 Number               Address           Status
---------           ---------          -------
    256         196.028.145.069         No

\ - return to menu    . - commands    TAB - next available field    ENTER - edit
```

Field Name	MIB	Settings (default in bold)
Sub Station Number	[swADPStationIndex]	

The base sub port number of the sub station.

Field Name	MIB	Settings (default in bold)
IP Address	[swADPStationNetAd-dress]	
The IP address of the sub station.		
Accept Status	[swADPStationStatus]	• Yes • **No**
Enter Yes to enable acceptance.		

Configuring the Ethernet Port

1.2.2.1 Ethernet Port Configuration

```
1.2.2.1. Ethernet Port Configuration                Record 1 of 1

 Port Number          :  2
 Configuration Status :  On-line
 MAC Address          :  00:ba:d0:ba:be:00
 Bridging Encap Type  :  Ethernet 802.3 encap
 Port Type            :  Ethernet 802.3
 Buffers              :  1200
 Transmit Buffers     :  256
 Receive Buffers      :  512
 Maximum Frame Size   :  1518
 Record Type          :  Valid









\ - return to menu   . - commands   TAB - next available field   ENTER - edit
```

Field Name	MIB	Settings (default in bold)
Port Number The Ethernet port is 2.	[swEtherPortIndex]	2
Configuration Status Determines whether the port comes up at initialization time. You must reset the unit for changes to take affect.	[swEtherPortConfigStatus]	• On-line • Off-line
MAC Address The MAC address of this Ethernet port.	[swEtherPortPhysAddress]	
Bridging Encap Type Encapsulation used for bridging.	[swEtherPortBridgingEncapType]	• Ethernet II encap • Ethernet 802.3 encap
Port Type This field is not configurable.	[swEtherPortPortType]	Ethernet 802.3

Field Name	MIB	Settings (default in bold)
Buffers	[swEtherPortMaxBuffers]	780
The number of message buffers allocated to this Ethernet port.		
Transmit Buffers	[swEtherPortTransDesc]	256
The number of transmit buffers.		
Receive Buffers	[swEtherPortRecvDesc]	256
The number of receive buffers.		
Maximum Frame Size	[swEtherPortMaxFrame-Size]	1518
The physical MTU.		
Record Type	[swEtherPortType]	• Valid • Invalid
If valid, this configuration is enabled upon reset. If invalid, this configuration record is deleted at the next reset.		

Configuring the Ethernet Transceiver

1.2.2.2 Ethernet Transceiver Configuration

```
          1.2.2.2. Ethernet Transceiver Configuration          Record 1 of 1

 Ethernet Port Number      :  2

 Interface Type             :  Auto-Negotiation

 Duplex Mode               :  Full Duplex
 SQE (10Base-T)            :  Disabled
 Jabber (10Base-T)         :  Enabled
 Auto Negotiate            :  Enabled
    Remote Fault           :  Disabled
    Pause                  :  Enabled
    100BASE-TX full-duplex :  Enabled
    100BASE-TX             :  Enabled
    10BASE-T full-duplex   :  Enabled
    10BASE-T               :  Enabled
    Selector Field         :  IEEE 802.3

 Record type               :  Valid



\ - return to menu    . - commands    TAB - next available field    ENTER - e
```

Field Name	MIB	Settings (default in bold)
Ethernet Port Number	[swEtherTransCfgIndex]	2
The Ethernet port number is 2.		
Interface Type	[swEtherTransCfgInter-face]	• **Auto-Negotiation** • 10BASE-T • 100BASE-TX • 100BASE-FX
Type of interface connected to the Ethernet port.		
Duplex Mode	[swEtherTransCfgDuplex]	• **Full Duplex** • Half Duplex
Duplex Mode for the Ethernet transceiver.		
SQE (10Base-T)	[swEtherTransCfgSQE]	• Enabled • **Disabled**
When SQE (heartbeat) function is enabled, the transceiver will assert COL output for 5-15 BT after each packet. Valid only for 10Base-T.		

Field Name	MIB	Settings (default in bold)
Jabber (10Base-T)	[swEtherTransCfgJabber]	• **Enabled** • Disabled
Disables transmit and loopback on the Ethernet transceiver if the MA transmission exceeds the jabber timer. Valid only for 10Base-T.		
Auto Negotiate	[swEtherTransCfgAuto-Negotiation]	• **Enabled** • Disabled
Status field indicating if Auto-negotiation for the Ethernet port is enabled as determined by the Interface Type setting.		
Remote Fault:	[swEtherTransCfgRe-moteFault]	• Enabled • **Disabled**
Modifiable only is Auto-negotiation is enabled. Enables/disables remote fault reporting.		
Pause:	[swEtherTransCfPause]	• **Enabled** • Disabled
Modifiable only is Auto-negotiation is enabled. Enables pause operation for full duplex link or disables pause operation.		
100BASE-TX full-duplex:	[swEtherTransCfg100BaseTXFullDuplex]	• **Enabled** • Disabled
Modifiable only is Auto-negotiation is enabled. Enables 100Base-TX full duplex for DTE capability.		
100BASE-TX:	[swEtherTransCfg100BaseTX]	• **Enabled** • Disabled
Modifiable only is Auto-negotiation is enabled. Enables 100Base-TX f for DTE capablility.		
10BASE-T full-duplex:	[swEtherTransCfg10BaseTFullDuplex]	• **Enabled** • Disabled
Modifiable only is Auto-negotiation is enabled. Enables 10Base-T full duplex for DTE capability.		
10BASE-T:	[swEtherTransCfg10BaseT]	• **Enabled** • Disabled
Modifiable only is Auto-negotiation is enabled. Enables 10Base-T for DTE capability.		

Field Name	MIB	Settings (default in bold)
Selector Field:	[swEtherTransCfgSelector]	• **IEEE 802.3** • IEEE 902.9 ISLAN 16T
Modifiable only is Auto-negotiation is enabled. This is the IEEE Selector Field. Typical users can accept the default of IEEE 802.3.		
Record Type:	[swEtherTransCfgType]	• **Valid** • Invalid
Indicates the status of this particular ethernet transceiver configuration. If valid, this configuration is enabled. If marked as invalid, this record will be deleted and will not exist after the next reset.		

Bridging

The SkyWay Bridge/Router can function as either a bridge or a router or both. When a packet arrives at the bridge, SkyWay examines it and determines its protocol type. The packet is then forwarded or discarded, depending on the functions enabled on the bridge:

- Bridging only - All packets are forwarded without regard to protocol
- Routing only - Only IP suite packets are forwarded; all other protocols are discarded
- Bridging and routing - IP suite packets are routed; all other protocols are bridged

However, if IP packets are sent to the bridge itself (its own IP address), it will accept them even if it is configured for bridging only.

Enabling and Disabling Bridging

Bridging is a global parameter, and the SkyWay Bridge/Router is configured by default with bridging. Disable bridging in "1.3.1 Bridge Configuration" on page 90. In this screen you also set the global bridge parameters when bridging is enabled. Then set up the ports for bridging operation in "1.3.2 Bridge Port Configuration" on page 92.

If you enable bridging, the bridge receives the frame and determines what action should be taken, that is, to forward or "filter" (drop the packet), based on the state of the bridge ports.

Port States

Each bridge port has a state associated with it. The port state is set by management or dynamically by other means (such as the Spanning Tree algorithm). There are five port states:

Port State	Description
Blocking	The port does not forward frames, but is included in the Spanning Tree topology.
Listening	The port is ready to forward frames, and Learning is disabled.
Learning	The port is ready to forward frames, and Learning is enabled. The port is still not forwarding.
Forwarding	The port is forwarding frames.
Disabled	The port does not forward frames, and is not included in the Spanning Tree topology.

As shown in the above table, the state determines if the bridge will allow the port to transmit frames. If you disable the port, it is excluded from bridge operation altogether. However, a port that is not disabled can be dynamically excluded by the Spanning Tree algorithm (see "Spanning Tree" on page 89).

Topology Support. The bridge supports the topology by determining which ports are 'eligible' to transmit frames. The bridge enables each port and allows it to transmit frames if all of the following conditions apply:

- The port that received the frame was in a forwarding state.
- The port eligible for transmission is in a forwarding state.
- The port eligible for transmission is not the same as the port the packet was received on.
- The size of the MTU conveyed by the frame does not exceed the maximum size of MTU supported by the LAN to which the port eligible for transmission is attached.

The frame is discarded if the port does not meet the above conditions.

Spanning Tree

Spanning Tree allows the bridge to determine which ports to shut down (put in Blocking mode) to break any loops which may occur in the topology. It uses an algorithm that figures out the best route and determines which ports will be included in the Spanning Tree. If the Spanning Tree algorithm sets the port state to Blocking, the port will not allow duplicate frames which result from multiple paths (loops) in the active topology of the bridge to be transmitted. If you disable bridging, you also disable Spanning Tree, as it applies to the bridging function only. You can then set the ports manually if Spanning Tree is disabled but bridging is enabled in 1.3.2 Bridge Port Configuration, described in detail on page 92.

1.3.1 Bridge Configuration

```
        1.3.1. Bridge Configuration

Bridging                  :  Enabled
Forwarding Table Timeout  :  300

Spanning Tree             :  Enabled
Bridge Priority           :  16961
Bridge Max Age            :  20
Bridge Hello Timeout      :  2
Bridge Forward Delay      :  15
Multicast Address         :  01:80:c2:00:00:00









\ -return to menu . - commands TAB - next available field ENTER - edit
```

Use this screen to set global bridging parameters, disable bridging, or enable the Spanning Tree function.

Note The SkyWay does not support Port Priority [dotIdStpPortPriority] as defined in RFC1493.

The following table lists the field name, the MIB name, and the default setting:

Field Name	MIB	Settings (default in bold)
Bridging	[swBridgeEnable]	• **Enabled** • Disabled
Enables or disables bridging on the system. If you disable bridging on this screen, it is disabled for all ports. If you change this parameter, you must reset the unit. Bridging supersedes spanning tree function, that is, if you disable bridging, spanning tree is also disabled.		
Fowarding Table Timeout	[dotIdTpAgingTime]	300
The timeout period in seconds for aging out dynamically learned forwarding information.		
Spanning Tree	[swBridgeSTPEnable]	• Enabled • **Disabled**
Enables or disables spanning tree function.		

Field Name	MIB	Settings (default in bold)
Bridge Priority	[dotIdStpPriority]	32768
This allows you to influence the choice of root bridge and designated bridge. A lower numerical value means the bridge is closer to becoming the root. and thereby change the topology of the spanning tree.		
Bridge Max Age	[dotIdStpBridgeMaxAge]	20
The amount of time in seconds the bridge waits before it discards configuration BPDUs.		
Bridge Hello Timeout	[dotIdStpBridgeHello-Time]	2
The amount of time in seconds before the bridge issues a configuration BPDU.		
BPDU Forward Delay	[dotIdStpBridgeForward-Delay]	15
The amount of time a port waits before going into a forwarding state.		
Multicast Address	[swBridgeMulticastAddr]	
The spanning tree multicast address contained in the configuration BPDU (message). This is the MAC address of packets intended for a bridge.		

1.3.2 Bridge Port Configuration

```
1.3.2. Bridge Port Configuration                    Record 1 of 1

  Port           Bridging          STP              STP Port
 Number           State            State               Cost
 ------          --------         --------           --------
   2              Enabled         Forwarding            10
  256             Enabled         Forwarding            100

\ - return to menu    . - commands    TAB - next available field    ENTER - edit
```

Use this screen to configure the port for bridging. The following table lists the field name, the MIB name, and the default setting:

Field Name	MIB	Settings (default in bold)
Port Number	[swBridgePortIndex]	
This is the port number used as a bridging port.		
Bridging State	[swBridgePortBridging-State]	• Enabled • Disabled
Specify if bridging is enabled or disabled for this port. This controls the port's bridging operation if Spanning Tree is disabled.		
STP State	[swBridgePortSTPState]	• Disabled • Blocking • Listening • Learning • Forwarding
This is a status field which tells you the current state for this port. For example, in the screen above, both ports are in the Forwarding state.		
STP Port Cost	[swBridgePortSTPCost]	
Determines the cost of the path to the root through this port.		

IP Routing

IP routing is a global parameter. It is disabled by default, but you can enable the unit for IP routing only or in addition to bridging. You cannot configure routing on a port to port basis.

Configuring IP

Use the 1.4.1 IP Protocol Configuration screen to enable IP routing and set global routing parameters.

1.4.1 IP Protocol Configuration

```
1.4.1. IP Protocol Configuration

 Routing                                :  Disabled
 Time To Live                           :  64
 ICMP Redirect Route Clearing Interval  :  1800
 Forward Broadcasts                     :  Enabled
 IP Reassembly Timeout                  :  8
 Default Gateway:
  Default Gateway Enabled               :  No
  Default Gateway Ip Address            :  000.000.000.000
  Default Gateway Port Number           :  3
```

The following table lists the field name, the MIB name, and the default setting:

Field Name	MIB	Settings (default in bold)
Routing	[ipForwarding]	Disabled
Enables or disables IP routing on this unit.		
Time to Live	[ipDefaultTTL]	64
Specified the number of hops a packet can be forwarded before it is discarded.		
ICMP Redirect Route Clearing Interval	[swIpIcmpredirectdlearingInterval]	1800
The interval of time, in seconds, in which routes learned from ICMP redirect messages are cleared.		

Field Name	MIB	Settings (default in bold)
Forward Broadcasts	[swIpBcastforwarding]	• Enabled • Disabled
Indicates whether IP broadcast messages are forwarded (Enabled) or not forwarded (Disabled) if they are received.		
IP Reassembly Timeout	[swIpReasTimeout]	8
Determines how many seconds to wait before discarding a packet when all fragments have not yet arrived.		
Default Gateway Enabled	[swDefaultGateway]	• **No** • Yes
Set to Yes to set a default gateway.		
Default Gateway IP Address	[swDefaultGatewayIPAddr]	
Enter the IP address to send IP datagrams for which no route was found		
Default Gateway Port Number	[swDefaultGatewayInterface]	
The SkyWay port number to use when forwarding IP datagrams with unknown routes.		

Configuring the IP Ports

Before you begin you need to have the IP Address and the IP Mask for the unit you are configuring.

1.4.2 IP Port Configuration

```
1.4.2. IP Port Configuration                          Record 1 of 2

   Port Number          :  2

   Proxy ARP            :  Enabled
   IP Address           :  134.196.034.001
   IP Mask              :  255.255.000.000
   IP Encapsulation     :  Standard Ethernet
   IP MTU               :  1492
   Arp Retry Timeout    :  30
   Arp Aging Timeout    :  300
   Arp Max Retries      :  5

   Configuration Status :  Valid









\ - return to menu    . - commands    TAB - next available field    ENTER - edit
```

The following table lists the field name, the MIB name, and the default setting:

Field Name	MIB	Settings (default in bold)
Port Number	[swIpPortIndex]	2
The port number for this IP configuration.		
Proxy ARP	[swIpPortProxyArp]	• Enabled • Disabled
Determines whether proxy Address Resolution Protocol (ARP) is enabled.		
IP Address	[swIpPortAddr]	
This is the IP address for this IP port (configurable).		
IP Mask	[swIpPortMask]	
This is the subnet mask.		

Field Name	MIB	Settings (default in bold)
IP Encapsulation	[swIpPortEncap]	• **Standard Ethernet** • DOD Ethernet • SNAP 802.3 • DOD 802.3
This defines the IP encapsulation type for this network.		
IP MTU	[swIpPortMTU]	1492
This sets the maximum transfer unit size.		
Arp Retry Timeout	[swIpPortArpRetryTO]	10
The amount of time in seconds to wait for an ARP reply before sending the next ARP request.		
Arp Aging Timeout	[swIpPortArpAgingTO]	300
The amount of time in seconds to hold an entry in the ARP table before removing it.		
Arp Max Retries	[swIpPortArpMaxRetries]	5
The number of times an ARP request is repeated without receiving an ARP reply. The minimum value is 1, the maximum value is 15 and the default should be 5.		
Configuration Status	[swIpPortType]	• Valid • Invalid
Set to Invalid to delete an entry in the IP ports table.		

Setting up Static Routing

Set up IP static routes in 1.4.3 IP Static Routes Configuration, described in detail on page 97.

Note For more information about IP Static Routes, see *Static Routing is the Best Choice for Service Providers*, a white paper published by Solectek.

1.4.3 IP Static Routes Configuration

```
1.4.3. IP Static Routes Configuration *              Record 0 of 0

                                                          Rte     Over  Record
 Network Address   Network Mask    Gateway Address  Prt   Cost    Ride   Type
 ---------------  ---------------  ---------------  ---   ----    ----  ------
 200.100.100.000   255.255.255.000  196.028.145.069  3     2       True   Valid

\ - return to menu    . - commands    TAB - next available field    ENTER - edit
```

Field Name	MIB	Settings (defaults in bold)
Network Address The destination IP address.	[swIpRouteNetAddr]	
Network Mask The destination network subnet mask.	[swIpRouteNetMask]	
Gateway Address The IP address of the gateway to use as the next hop.	[swIpRouteGateway]	
Prt The physical port number that is used to reach the gateway address.	[swIpRouteIndex]	3

Field Name	MIB	Settings (defaults in bold)
Rte Cost The route cost.	[swIpRouteCost]	2
Override Indicates if cost override is enabled.	[swIpRouteOverride	True/False
Record Type If valid, this configuration will initialize upon reset. If invalid, this record is deleted from the database upon the next reset.	[swIpRouteType]	• Valid • Invalid

BOOTP

BOOTP is part of the IP Protocol suite and is described in RFC 951 anf RFC 1542.

1.4.4 BOOTP Configuration

```
         1.4.4. BOOTP Configuration

Relaying            :  Disabled
Destination Address :  255.255.255.255
Maximum Hops        :  4
Broadcast Reply     :  No

\ - return to menu    . - commands    TAB - next available field    ENTER - edit
```

Field Name	MIB	Settings (default in bold)
Relaying	[swBootpCfgRelayAgen-tEnabled]	• Enabled • **Disabled**
Set this field to Enabled to enable BOOTP functionality.		
Destination Address	[swBootpCfgRelayAgent-ForwardIpAddr]	255.255.255.255
This is the server's IP address. The default is the limited broadcast address.		
Maximum Hops	[swBootpCfgRelayAgent-MaxHops]	4
This field sets the maximum number of times a BOOTP request can be routed. The range is 1 - 16.		
Broadcast Reply	[swBootpCfgRelayAgent-BroadcastReplyFlg]	• **No** • Yes
This field, if set to yes, forces all relayed BOOTP replies to be returned to the client using the limited broadcast IP address.		

Obtaining a Configuration Summary

Use screen 1.5 Configuration Summary to check system, port, bridging, routing, and RF port configuration settings.

1.5 Configuration Summary

```
1.5. Configuration Summary

System Configuration:
---------------------

  System Description        Solectek Corporation SkyWay
  System Date & Time        18 Jan 2000 20:35:01
  Port - 1                  RS-422  115200  8  NONE  One
  Port - 2                  Ethernet 802.3                 00:ba:d0:ba:be:00
                            Auto Negotiation               On-line
  Port - 3                  RF Base Port                   00:00:c4:1c:91:45
                            2 Mbps                         On-line

Bridge Configuration:
---------------------

  Bridging                  Enabled
  Spanning Tree             Enabled
  Number of Bridge Ports    1




\ - return to menu    . - commands    TAB - next available field    ENTER - edit
```

The system configuration area describes the current settings for the system and ports. Port 1 displays the serial port settings, including type, baud rate, data bits, parity, and stop bits. Port 2 displays the Ethernet port settings, including the MAC address for the port, Interface Type, and configuration status. Port 3 displays the RF port settings, including the Port Type, MAC address for the port, data rate, and configuration status.

Bridge Configuration displays Bridging and Spanning Tree status (enabled or disabled) and number of currently configured bridge ports.

Press .N to see the next page:

```
        1.5. Configuration Summary

Router Configuration:
---------------------

  IP Routing                Enabled
  IP Port Configuration
    Port  2                 104.100.002.001  255.255.000.000
    Port  3                 104.099.001.001  255.255.000.000

RF Configuration:
-----------------

Number of Substations       0
RF Frequency                2468 Mhz









\ - return to menu    . - commands    TAB - next available field    ENTER - edit
```

Routing Configuration displays IP routing status (enabled or disabled), and the IP addresses and network masks for each port.

The RF Configuration displays the number of sub stations and the RF Frequency setting.

Internet Control Message Protocol

The Internet Control Message Protocol (ICMP) is part of the IP Protocol suite. The implementation of ICMP on the SkyWay Bridge/Router follows the standard as described in RFC 792.

The Ping utility generates an ICMP Echo Request and expects to receive an ICMP Echo Reply packet. For more information, see 3.2 Ping Utility, described in detail on page 109.

SNMP

Use Simple Network Management Protocol (SNMP) to access and manage the SkyWay remotely using such SNMP management platforms as HP OpenView™ and SNMPc™. The console functions through SNMP and contains standard MIBs for supported protocols and private MIBs for SkyWay's proprietary functions. However, because of the need for security, not all functions are available through SNMP.

SNMP Features Available

The following is a list of RFCs that the SkyWay supports:

RFC	Description	Not supported
RFC 1213	MIB-II	• Excluded nt group • Excluded ipRouteTable - replaced by RFC 1354 • Excluded tcp group? • Excluded egp group?
RFC 1215	SNMP Trap Definition	
RFC 1317	RS-232-like MIB	• Autobaud in rs232AsynPortTable
RFC 1493	Bridge MIB	• dot1dStaticTable • dot1dStpPortPriority - port priority in the Spanning Tree table
RFC 1643	Ethernet-like MIB	
RFC 1905	SNMP Errors	
RFC 2089	SNMPv2 errors mapped in SNMPv1	
Solectek Proprietary MIB-sw.mib	Solectek defined SNMP objects registered tree = 2890.	

Diagnostics

There are two types of diagnostics you can run on the SkyWay, Bios and Run Time.

BIOS Diagnostics

Access BIOS diagnostics through the BIOS Main Menu, option 2 (for details, see " Bios Application" on page 18). The Bios Diagnostics menu includes these diagnostic routines:

DRAM	tests the active memory
Flash	tests the storage area (flash memory)
Ethernet	internal or external Ethernet test
Loop Through All	set up and run all of the above tests

RunTime Diagnostics

There are two kinds of Run Time diagnostics you can use to test communications between the Base and Sub Stations:

- RF Base and Sub Radio Tests test communications at the bench test level, before installation
- Ping Utility tests communications after installation

For an example of using the RF Base and Sub Radio Tests, see "Bench Test" on page 32.

4.1 RF Base Radio Test

```
   4.1 RF Base Radio Test

       ** Note - diagnostic driver must be installed **

RF Port Number : 3
Test Timeout   : 8 milliseconds
Test To Run    : Terminate Test

     Number of Frames or Bursts, 1 - 65535 or 0 for Continuous. :0
     Frame Length or Maximum Burst Size, 3 - 3200               :1530









\ - return to menu    . - commands    TAB - next available field    ENTER - edit
```

The following lists the field name, the MIB name, and the default setting:

Field Name	MIB	Settings (default in bold)
RF Port Number	[swRFBaseTestIndex]	3
The RF port number is 3.		
Test Timeout	[swRFBaseTestTO]	8
The timeout value in milliseconds. This is the amount of time the test will run before terminating on its own.		
Test to Run:	[swRFBaseTestToRun]	See the following table:
Select a test to run and press .W to begin the test. There are five tests you can run on the base port as described in the following table. To end the test, set Test to Run to Terminate Test and press .W.		

Test To Run	Parameters that can be configured	Comments
Burst Frame Ping Pong Mode	Test Timeout, Number of Bursts, Maximum Burst Size	The base station sends the specified number of bursts, and the sub station returns the same number.

Field Name	MIB	Settings (default in bold)
Test To Run	**Parameters that can be configured**	**Comments**
Continuous Burst Transmit	Test Timeout, Number of Bursts	This test is similar to Burst Frame Ping Pong Mode, except that the sub station does not reply. The base station sends the number of bursts, times out, repeats. (There are 7 frames in a burst).
Continuous Single Frame Transmit	Test Timeout, Number of Frames, Frame Length	This test is similar to Single Frame Ping Pong Mode, except the sub station does not reply. The base station sends the number of frames to the sub station continuously until the timeout occurs.
Single Frame Ping Pong Mode	Test Timeout, Number of Frames, Frame Length	The base station sends out the frames, one at a time, and the substation returns them one at a time.This test can be used as a protocol tester to send out all types of RF-DLC frames.
Static Size Ping Pong Mode	Test Timeout, Number of Frames, Frame Length	The base station sends the number of frames of the size given, the sub station receives them and performs a CRC, then returns the same number of frames of the same length.

Field Name	MIB	Settings (default in bold)
Terminate Test		Ends the currently running test.
Number of Frames or Bursts	[swRFBaseTestFrames]	0
The number of frames or bursts to transmit when running the Continuous Single Frame Transmit test.		
Frame Length or Maximum Burst Size	[swRFBaseTestFrameLength]	1530
The frame length to transmit when running the Continuous Single Frame Transmit test. The range is 3 to 3200.		

4.2 RF Sub Radio Test

```
4.2 RF Sub Radio Test

     ** Note - diagnostic driver must be installed **

 RF Port Number : 3
 Test To Run    : Terminate Test

\ - return to menu    . - commands    TAB - next available field    ENTER - edit
```

The following lists the field name, the MIB name, and the default setting:

Field Name	MIB	Settings (default in bold)
RF Port Number	[swRFSubTestIndex]	3
The RF Port number is 3.		

Field Name	MIB	Settings (default in bold)
Test to Run	[swRFSubTestToRun]	• Burst Frame Ping Pong Mode • Continuous Burst Receive • Continuous Single Frame Receive • Single Frame Ping Pong Mode • Static Size Ping Pong Mode
Note: See "4.1 RF Base Radio Test" on page 105 for test descriptions.		

Ping Utility

The Ping utility tests communications between units in a system that is already operational. Ping generates an ICMP Echo Request packet and expects to receive an ICMP Echo Reply packet.

3.2 Ping Utility

```
3.2. Ping Utility

 Destination IP Address       :  000.000.000.000
 Ping Payload Size            :  64
 Number of Packets            :  0
 Reply Timeout                :  1
 Delay Between Packets        :  0
 Ping Operation               :  Start Ping

 Ping Session Status          :  Idle
 Packets Sent                 :  0
 Correct Responses Received   :  0
 Incorrect Responses Received :  0
 Number of Timed Out Packets  :  0
 Longest Round Trip Delay     :  0
 Shortest Round Trip Delay    :  0
 Average Round Trip Delay     :  0

\ - return to menu    . - commands    TAB - next available field    ENTER - edit
```

The following table lists the field name, the MIB name, and field options with the default setting, if any, in bold:

Field Name	MIB	Settings (default in bold)
Destination IP Address	[swPingDestIPAddr]	
The IP address of the unit you want to send an ICMP Echo Request to.		
Ping Payload Size	[swPingPacketSize]	**64**
The ping packet size.		
Number of Packets	[swPingNumPackets]	**0**
The number of packets to be sent during the ping session or operation.		
Reply Timeout	[swPingReplyTimeout]	**1**
The number of seconds to wait before this ping session times out.		
Delay Between Packets	[swPingDelay]	**0**
The delay in milliseconds between each ping sent out during this ping session.		
Ping Operation	[swPingOperation]	• Start Ping • Abort Ping
Starts or stops the ping operation.		

Field Name	MIB	Settings (default in bold)
Ping Session Status	[swPingStatus]	• Idle • Pinging
The current status of the last ping session started. Pinging indicates the session is operating, and Idle indicates the last session has finished or no session has been started.		
Packets Sent	[swPingPacketsSent]	0
Total number of packets or pings sent in this session.		
Correct Responses Received	[swPingCorrectRR]	0
Total number of correct ping responses received.		
Incorrect Responses Received	[swPingIncorrectRR]	0
Total number of incorrect ping responses received.		
Number of Timed Out Packets	[swPingNumPacketsTim-eout]	0
The number of packets that timed out during this ping session.		
Longest Round Trip Delay	[swPingLongestRTD]	0
The longest round trip delay. The amount of time in milliseconds that has passed between the time the ping was sent and the response for that ping is returned.		
Shortest Round Trip Delay	[swPingShortestRTD]	0
The shortest round trip delay. The amount of time in milliseconds that has passed between the time the ping was sent and the response for that ping is returned.		
Average Round Trip Delay	[swPingAverageRTD]	0
The average round trip delay. The amount of time in milliseconds that has passed between the time the ping was sent and the response for that ping is returned.		

File Directory

Use screen 3.1.4 to see a list of Solectek file types and sizes.

3.1.4 File Directory

```
            3.1.4 File Directory                      Record 1 of 8

     File Type        Version    File Size     Date And Time       Status
------------------- ----------  ---------  --------------------  --------
Boot Loader           0.30       2316       16 Feb 2000 13:56:55   Valid
FPGA                  0.3        31146      17 Feb 2000 12:31:04   Valid
Crash Dump            0.0        81788      26 Jan 2001 00:00:56   Valid
Error Log             0.0        130816     26 Jan 2001 00:00:57   Valid
Bios DB               0.0        131072     25 Jan 2001 22:23:22   Valid
Runtime DB            0.0        1048576    25 Jan 2001 22:23:57   Valid
Bios Application      0.30       393216     22 Feb 2000 12:21:08   Valid
Runtime Application   0.30.3     983039     22 Feb 2000 13:28:04   Valid




Source Information: YMODEM on 01/25/2001 22:19:27




\ - return to menu    . - commands    TAB - next available field    ENTER - edit
```

File Transfer Utilities

At times it is necessary to upgrade the SkyWay Bridge/Router software. You can do this remotely using the file transfer utilities, Xmodem, Ymodem, or TFTP. Typically you will need to upgrade the Runtime Application with a new release of the software.

The three file transfer utilities are Xmodem, Ymodem, and TFTP.

Xmodem

Xmodem is a file transfer protocol with the following ASCII character definitions:

<SOH>	01H	This is always the first byte in each block.
<EOT>	04H	This is sent instead of SOH to mark the end of transmission.
<ACK>	06H	Positive Acknowledgement.
<NAK>	15H	Negative Acknowledgement
<CAN>	18H	Cancel transfer.

Xmodem is a receiver-driven, asynchronous, 8 data bit protocol. Each packet has the following format:

<SOH>	*<packet>*	*<compliment #>*	*<data>*	*<checksum>*

where:

<SOH>	=	01H
<packet>	=	Packet number, starting at 01, incrementing by 1, and wrapping from 0FFH to 00H (not 01H)
<compliment #>	=	255 minus the packet number
<data>	=	128 bytes of binary data
<checksum>	=	The sum of the data bytes. Starting with zero, add each data byte to the checksum and use only the rightmost 8 bits.

When the receiver is ready, it sends a NAK every 10 seconds (up to one minute) until the transmitter acknowledges the NAK by sending the first packet. The transmitter continues by sending each packet in turn, always waiting for the packet to be acknowl-

edged before sending the next. When the transmitter has no more data to send, it sends an EOT to complete the transfer.

The XModem/CRC Protocol. The XModem/CRC protocol is similar to the XModem protocol, but the receiver specifies CRC-16 by sending C (Hex 43) instead of NAK when requesting the first block. A two-byte CRC is sent in place of the one-byte arithmetic checksum.

Note The XModem and YModem screens are almost identical, except that XModem does not have a File Name field, that is, it supports multi-file transfers with packet sizes of 128 to 1024 bytes. The remainder of Xmodem and Ymodem fields have identical descriptions. Therefore, only the YModem screen is shown, and one table containing field descriptions is presented. Both MIBs are given.

YModem

The Ymodem batch protocol is an extension to the Xmodem/CRC protocol. It allows zero or more files to be transmitted in a single session and supports 1024 data size packets. Ymodem always sends an information packet containing the filename and file length with each file.

3.1.2 YModem

```
3.1.2. Ymodem File Transfer

 Port Number       :   1
 File Type         :   Runtime Application
 Session Type      :   Choose Action
 File Name         :
 Status            :   Idle
 Bytes Transferred :   0
 Number of Retries :   0
 Error Message     :

\ - return to menu    . - commands    TAB - next available field    ENTER - edit
```

The following table lists the field name, the MIB name, and the default setting:

Field Name	MIB	Settings (default in bold)
Port Number	[swXmodemIFIndex] [swYmodemIFIndex]	1
The port number is 1, the serial port.		
File Type	[swXmodemFileType] [swYmodemFileType]	• Boot loader • FGPA • Crash dump • Error log • Bios data base • Saved data base • Default data base • Boot Application • Runtime Application
The type of file to be transferred.		
Session Type	[swXmodemAction] [swYmodemAction]	Send/Receive
The action to be performed by the file transfer task, Download (Send), or Upload (Receive).		

Field Name	MIB	Settings (default in bold)
File Name	[swYmodemFileName]	
The file name of the file to be transferred. The Xmodem screen does not have the File Name field.		
Status	[swXmodemStatus] [swYmodemStatus]	• Receiving • Transmitting • Failed • Idle
The current status of this file transfer.		
Bytes Transferred	[swXmodemBytesTrans-ferred] [swYmodemBytesTrans-ferred]	0 – 4,294,967,295
Counts the number of bytes as the file is currently being transferred and dynamically displays it. If there is not a current transfer running, the number of bytes transferred in the last file transfer is displayed.		
Number of Retries	[swXmodemNumRe-tries] [swYmodemNumRetries]	0 – 4,294,967,295 (only after an error)
The number of retries for the current or last file transfer.		
Error Message		
A text message which displays the reason the file transfer failed.		

Uploading a New Software Version

This procedure describes how to upload a new software version to the SkyWay Bridge/Router, and assumes you are running the SkyWay Administrative Console in a HyperTerminal window using the Ymodem protocol.

1. From the SkyWay main menu, go to screen 3.1.2 - Ymodem File Transfer.

Note Follow steps 2 and 3, even if the screen appears to have the correct values, or the file transfer might not take place properly.

2. Enter the following values in the fields:

   Port Number: 1 (this is non-configurable, 1 is the serial port).

   File Type: *Runtime Application*

File Name: (the name of the file you are retrieving. You can enter it now or under step 4 below).

Session Type: *Receive* (indicates that the SkyWay is *receiving* the file from the source, for example, the PC hard drive or a network drive.)

3. Press .W to save and implement the changes.

   This prepares the SkyWay to receive the file. You might see "Receiving a file...CCC", a series of Cs displays on the screen. This occurs during a Receive session type.

4. From the HyperTerm menu, click **Transfer**, **Send File** and a dialog box appears (that is, the PC will be *sending* the file to the SkyWay).

   For Filename: browse to the Rt_App.bin file.

   Choose Ymodem as the protocol.

5. Click **Send**.

   A few seconds may elapse before the transfer begins, then in the *File* field you should see blocks start to appear, and the Packet number incrementing. These two events indicate that the file transfer has begun. Another indication is the *Bytes Transferred* field begins to dynamically display the number of bytes being transferred. The **cps/bps** button allows you to toggle the displayed transfer rate as either characters per second or bits per second.

   If the system does not begin transferring the file, and a time out occurs, you may see a message indicating the transfer was cancelled by the remote system. In this case, the system retries the file transfer up to the number of times specified by the Number of Retries field.

6. To start the new software version:

   a. Go to the Main Menu.

   b. Type 5 (Start Application).

   c. Choose Run Time application and type .W.

      This loads the new application. You should see "Press any key to start login."

   d. Press Enter, and the SkyWay Login screen displays. Check to make sure the new version number appears on the Login screen.

Trivial File Transfer Protocol

Trivial File Transfer Protocol (TFTP) is a simple file transfer protocol. It was designed to have fewer features than FTP; for example, it only reads and writes files to or from a remote server. It cannot list directories or authenticate users.

TFTP Clients and Server

TFTP is client/server based. There are a few ways to set up and use TFTP:

SkyWay	PC	Screens to Use on SkyWay
Client	Server	3.1.1.2 TFTP File Transfer
Server Enabled	Client	3.1.1.1TFTP Server Configuration.
Server and Client	Client and Server	3.1.1.2 TFTP File Transfer and 3.1.1.1 TFTP Server Configuration

SkyWay is the client; the PC is the server. In this configuration, you do not need to configure the SkyWay as a TFTP server; the PC is set up as the server, using third-party TFTP software. To send or receive files from the server, use the 3.1.1.2 TFTP File Transfer screen.

SkyWay is the server; the PC is the client. Here, you configure the SkyWay as a TFTP server, using the 3.1.1.1 TFTP Server Configuration screen, which also acts as a status screen to display statistics. You can configure the server to be "send only," which means that files can only be sent from the SkyWay to the client; the client cannot send or download any files to the SkyWay. On the PC, install TFTP client software so that it can handle its end of the TFTP file transfer process.

SkyWay is the Server and Client; the PC is the Client and Server. In this scenario, the SkyWay can act as both a server and a client, and the PC acts as both a client and a server. The SkyWay TFTP server exchanges files with the TFTP client on the PC, and the SkyWay TFTP client exchanges files with the TFTP server on the PC.

Sending and Receiving Files

The TFTP server establishes a connection and begins the file transfer. It sends the first block of data (specified by the block size). The client receives the block, sends an acknowledgement to the server, and requests the server to send the next block of the file. The server has a timeout value by which the acknowledgement and request must be sent, or it terminates the connection. When the server gets the acknowledgement, it sends the next block of the file. The client is required to acknowledge each block as it is sent, until the entire file has been transferred.

File Definitions

The following table lists the file names to enter as the remote file name in the TFTP client software on your workstation when transferring files to or from the SkyWay TFTP Server.

File Name	Description
BOOTLDR.BIN	Boot Loader
FPGA.BIN	FPGA
CRSHDUMP.BIN	Crash Dump
ERRORLOG.BIN	Error Log
BIOS_DB.BIN	Bios Database
DATABASE.BIN	Run Time Database
DBDEFLT.BIN	Default Database
BIOS_APP.BIN	Bios Application
RT_APP.BIN	Run Time Application

TFTP Status

The 3.1.1.1 TFTP Server Configuration screen is also a status screen that provides information about the current or last file transfer that occurred on the SkyWay TFTP server.

Configuring the TFTP Server on SkyWay

Use 3.1.1.1 TFTP Server Configuration screen to set up the SkyWay as a TFTP Server.

3.1.1.1 TFTP Server Configuration

```
        3.1.1.1 TFTP Server Configuration


Server Status    :     Disabled
Time_out         :     20

Current State    :     Idle
Current File     :     Use Filename
Read  Requests   :     0
Write Requests   :     0
Aborted Sessions :     0

Reset Statistics :     No









\ - return to menu    . - commands    TAB - next available field    ENTER - edit
```

The following table lists the field name, MIB, and the settings (default in bold):

Field Name	MIB	Settings (default in bold)
Server Status	[swTFTPServerStatus]	• Enabled • Send only • **Disabled**
Set Server Status to Enabled or Send only to configure the SkyWay as a TFTP server. Send only means the TFTP server is enabled to send files only and cannot receive files.		
Time_out	[swTFTPServerTO]	20
The amount of time in seconds the TFTP Server will wait before a timeout occurs. For example, if the server sends a packet and it is not acknowledged by the client before the timeout expires, the server shuts down the connection.		

Field Name	MIB	Settings (default in bold)
Current State	[swTFTPServerState]	• Receiving • Sending • **Idle**
The current status of the TFTP Server.		
Current File	[swTFTPServerFile]	Use filename
The type of file currently being transferred.		
Read Requests	[swTFTPServerRRQ]	
Number of read requests received by the TFTP Server.		
Write requests	[swTFTPServerWRQ]	
Number of write requests received by the TFTP Server.		
Aborted Sessions	[swTFTPServerAborts]	
The number of times an upload was aborted since the last reboot.		
Reset Statistics	[swTFTPServerStatsReset]	• Yes • **No**
Reset the statistics each time a file transfer is started.		

3.1.1.2 TFTP File Transfer

```
        3.1.1.2. TFTP File Transfer

IP Host Address    :  000.000.000.000
File Type          :  Runtime Application
File Name          :
Timeout            :  20
Block Size         :  512
Session Type       :  Receive

Status             :  Idle
Bytes Transferred  :  0
Number of Retries  :  0

Error Message      :




\ - return to menu . - commands TAB - next available field ENTER - edit
```

The following table lists the field name, the MIB name, and the default setting:

Field Name	MIB	Settings (default in bold)
IP Host Address	[swTFTPIPAddr]	000.000.000.000
This is the IP address of the PC that is running the server.		
File Type	[swTFTPFileType]	• Boot loader • FGPA • Crash dump • Error log • Bios data base • Saved data base • Default data base • Boot Application • Runtime Application • Use Filename
The type of file to be transferred.		
File Name	[swTFTPFileName]	
The file name of the file to be transferred.		
Timeout	[swTFTPTO]	20
Tells the server what the timeout parameter will be, that is, how long the server should wait to receive an acknowledgement before terminating the connection.		

Field Name	MIB	Settings (default in bold)
Block Size	[swTFTPBlockSize]	512
The amount of data that is sent over at one time (80-1400 bytes).		
Session Type	[swTFTPAction]	• Receive • Send • **Abort**
The action to be performed by the client, that is, either send a file to the server or receive a file from the server.		
Status	[swTFTPStatus]	• Receiving • Transmitting • Failed • **Idle**
The current status of the transfer.		
Bytes Transferred	[swTFTPBytesTrans-ferred]	0
Counts the number of bytes as the file is currently being transferred and dynamically displays it. If a file isn't currently transferring, this field displays the number of bytes transferred in the last file transfer.		
Number of Retries	[swTFTPNumRetries]	0 (only after an error)
The number of retries for the current or last file transfer.		
Error Message	[swTFTPErrMsg]	
A text message which displays the reason the file transfer failed.		

Security

Multi-level Password Security

There are two user levels:

- Super user
- Standard user

A Super user can assign other Super users and Standard users.

A Standard user cannot add other users.

SNMP Security

To secure the system against illegal access, certain screens are not available via SNMP:

1.1.1 Network Management Security Configuration

1.1.3 User Access Configuration Menu - all screens in this menu tree

4.3 Field Support Menu - all screens in this menu tree

Chapter 6: Monitoring SkyWay

You can monitor SkyWay's operations and errors by using the status and control screens available from option 2 of the Main Menu. Many of the monitoring screens are read-only, however some contain configurable parameters that are noted in their descriptions.

You can use the status screens to monitor protocol operations, to test whether a configuration change is in effect, and to troubleshoot problems on the system.

This chapter provides information on:

Monitoring Features Available 126

System Status and Control Screens 127

Port Status and Control Screens 132

RF-DLC Screens 140

Bridging Screens 149

IP Routing Screens 157

Base Station States 164

Status Summary 168

Monitoring Features Available

The following table provides an overview of the monitoring features available from both the Administrative Console and SNMP for each of the SkyWay's major functions:

	Console	SNMP	Comment
System Status and Control	X	X*	Allows you to check the status of SNMP packets, traps, and error log.
Port Status and Control	X	X	Allows you to check all port statistics and gives you operational control over them.
Bridge Status	X	X	Allows you to check the status of bridging and spanning tree operation.
Router Status	X	X	Allows you to check the status of IP, ICMP, and ARP packets received and transmitted.
RF-DLC Status	X	X	Allows you to check the status of the RF-DLC base port, all sub station ports, ADP polling state, and RF Signals.

*. Screen 2.1.1. General Status and Control is read-only via SNMP.

System Status and Control Screens

System status includes an overview of the system and SNMP Statistics.

Taking a System Snap Shot

You can access the 2.1.1 General Status and Control screen to view you system's hardware configuration. You can also use this screen to change the Watchdog timer, which is the only configurable field on this screen.

Note If you are accessing this screen using an SNMP Manager, you cannot change the Watchdog timer.

2.1.1 General Status and Control

```
2.1.1. General Status and Control *

Product Code          :  Skyway Bridge
Serial Number         :  12
Board Revision        :  Version 1
Software Version      :  Version 1.0
Media Type            :  Twisted Pair
RF Power Type         :  High Power
County Code           :  United States
Antenna Type          :  No antenna
DRAM Size             :  32 Mb
DRAM Usage (bytes)    :  4258216
FLASH Size            :  8 Mb
FLASH Usage (bytes)   :  2589520
VCO type              :  Package
Operational for       :  22000
Last Failure Reason   :  No crash dump


Watchdog Timeout      :  200010     0 - watchdog timer off
                                    each unit is 1.5ms



\ - return to menu    . - commands    TAB - next available field    ENTER - edit
```

Checking SNMP Status and Trap History

From the 2.1.2 Network Management Status menu, you can check how many times SNMP errors occurred using the following two screens.

2.1.2.1 SNMP Status

This screen lists all the SNMP errors that may have occurred and the number of times the error occurred since the last reset.

At the bottom of the screen, the fields list the number of incoming and outgoing SNMP packets and traps.

```
         2.1.2.1. SNMP Status

In Bad Version              :    0
In Bad Community Name       :    0
In Bad Community Use        :    0
In Bad ASN                  :    0
In Read Only                :    0
Out Too Bigs                :    0
Out No Such Name            :    0
Out Bad Values              :    0
Out General Error           :    0
Total Retrieved MIB Objects :    0
Total Altered MIB Objects   :    0
In Get Requests             :    0
In Get Next Requests        :    0
In Set Requests             :    0
Out Get Responses           :    0
Authentication Traps        :    Enabled

                                 Incoming:           Outgoing:
Packets                     :    0                   0
Traps                       :    0                   0
```

2.1.2.2 SNMP Trap History

This screen displays the trap number, description, value (OID), and date and time the error occured.

```
2.1.2.2. SNMP Trap History                          Record 1 of 6

Trap#          Trap Description         Value       Date & Time
-----  -------------------------------  -----  --------------------
0      Link_Down                        2      02 Mar 1999 21:58:45
1      New_Root                         0      02 Mar 1999 21:58:45
2      New_Root                         0      02 Mar 1999 21:58:45
3      Link_Up                          8      02 Mar 1999 21:58:45
4      Link_Down                        3      02 Mar 1999 21:58:45
5      Link_Up                          8      02 Mar 1999 21:58:45









\ - return to menu    . - commands    TAB - next available field    ENTER - edit
```

)

Field Name	MIB	Comments
Trap#	[swTrapHistoryIndex]	
A number that corresponds to the trap log table index.		
Trap Description	[swTrapHistoryName]	
A description of the type of trap that occurred. For a list of trap messages, see "Appendix G: SNMP Trap Messages" on page 191.		
Value	[swTrapHistoryValue]	
The value of the first trap variable or zero.		
Date & Time	[swTrapHistoryDateAnd-Time]	
The date and time the trap occurred.		

Checking the Error Log

Use the 2.1.3 Error Log Status screen to check the error log.

```
2.1.3. Error Log Screen                                    Record 1 of 14

Er#          Partial Error Description         Log Level        Date & Time
---  ---------------------------------------- ------------ ---------------------
0    Link Up Trap for port 1                  Notification 14 Jan 2001 20:44:19
1    Link Up Trap for port 2                  Notification 14 Jan 2001 20:44:19
2    Cold Start Trap                          Notification 14 Jan 2001 20:44:50
3    Link Down Trap for port 2                Notification 14 Jan 2001 20:46:44
4    New root detected.                       Notification 14 Jan 2001 20:46:44
5    New root detected.                       Notification 14 Jan 2001 20:46:45
6    Link Up Trap for port 2                  Notification 14 Jan 2001 20:46:45
7    Link Up Trap for port 3                  Notification 14 Jan 2001 20:47:20
8    Link Down Trap for port 2                Notification 14 Jan 2001 21:12:13
9    New root detected.                       Notification 14 Jan 2001 21:12:13
10   New root detected.                       Notification 14 Jan 2001 21:12:13
11   Link Up Trap for port 2                  Notification 14 Jan 2001 21:12:13
12   Link Down Trap for port 3                Notification 14 Jan 2001 23:24:13
13   Link Up Trap for port 3                  Notification 14 Jan 2001 23:24:18

Link Up Trap for port 1

File: up_port.c                          Line: 355    TrapOid:  4

\  - return to menu    . - commands    TAB - next available field    ENTER - edit
```

Field Name	MIB	Comments
Er#	[swErrorLogIndex]	
The number of the error corresponding to the error log index.		
Partial Error Description	[swErrorLogEntry]	
The first 40 characters of the error description.		
Log Level	[swErrorLogLevel]	• Notification • Warning • Recoverable • Fatal
The severity of the error. Notification is informational, Warning indicates there may be a possible problem, Recoverable is an error, but indicates the system is still functional, and Fatal is an error indicating an unstable system or a crash.		
Date & Time	[swErrorLogDateAnd-Time]	
The date and time the error occurred.		

Field Name	MIB	Comments
Error message at the bottom of the screen	[swErrorLogEntry]	
A more complete description of the error at the cursor position.		
File:	[swErrorLogFileName]	
The source file where the error occurred.		
Line:	[swErrorLogLineNumber]	
The line of code in the source file where the error occurred.		
TrapOid:	[swErrorLogTrapOid]	
The Trap Object Identifier (OID).		

Port Status and Control Screens

The Port Status and Control screens allow you to check the status of the following:

- Serial port
- Ethernet port
- Ethernet Transceiver
- RF Ports

Checking the Serial Port Status

Use the 2.2.2 Serial Port Status screen to check serial port parameters and errors,

2.2.2 Serial Port Status

```
2.2.2. Serial Port Status

 Port Number    :  0
 Data Bits      :  8
 Parity         :  NONE
 Stop Bits      :  1
 Parity Errors  :  0
 Framing Errors :  0
 Overrun Errors :  0

\ - return to menu    . - commands    TAB - next available field    ENTER - edit
```

Field Name	MIB	
Port Number	[rs232AsyncPortIndex]	1
The serial port number is 1.		
Data Bits	[rs232AsyncPortBits]	
The number of bits in a character.		
Parity	[rs232AsyncPortParity]	
The port's sense of a character parity bit.		
Stop Bits	[rs232AsyncPortStopBits]	

Field Name	MIB
The number of stop bits.	
Parity Errors	[rs232AsyncPortParityErrs]
The total number of characters with a parity error, input from the port since system re-initialization and while the port state was “up” or “test”.	
Framing Errors	[rs232AsyncPortFramingE rrs]
The total number of characters with a framing error, input from the port since system re-initialization and while the port state was “up” or “test”.	
Overrun Errors	[rs232AsyncPortOverrun Errs]
The total number of characters with an overrun error, input from the port since system re-initialization and while the port state was “up” or “test”.	

Checking the Ethernet Port Status

From the 2.2.3 Ethernet Port Status menu, you can check how many times Ethernet Port errors or conditions occurred, and the status of the Ethernet Transceiver.

2.2.3.1 Ethernet Port Status

```
        2.2.3.1. Ethernet Port Status                        Record 1 of 1

Port Number                  :  2
Alignment Errors             :  0
FCS Errors                   :  0
Single Collisions            :  0
Multiple Collisions          :  0
SQE Test Errors              :  0
Frames Deferred              :  0
Late Collisions              :  0
Excessive Collisions         :  0
Internal MAC Transmit Errors :  0
Carrier Sense Lost           :  0
Frames Too Long              :  0
Internal MAC Receive Errors  :  0









\ - return to menu    . - commands    TAB - next available field    ENTER - edit
```

Field Name	MIB	2
Port Number	[dot3StatsIndex]	
The physical port number is 2.		
Alignment Errors	[dot3StatsAlignmentErrors]	
The number of frames received on a particular interface that are not an integral number of octets in length and do not pass the FCS check.		
FCS Errors	[dot3StatsFCSErrors]	
The number of frames received on a particular interface that are an integral number of octets in length but do not pass the FCS check.		
Single Collision Frames	[dot3StatsSingleCollisionFrames]	
The number of successfully transmitted frames on a particular interface for which transmission is inhibited by exactly one collision		

Field Name	MIB	2
Multiple Collision Frames	[dot3StatsMultipleCollisionFrames]	
The number of successfully transmitted frames on a particular interface for which transmission is inhibited by more than one collision.		
SQE Test Errors	[dot3StatsSQETestErrors]	
The number of times that the SQE TEST ERROR message is generated by the PLS sublayer for a particular interface.		
Deferred Transmissions	[dot3StatsDeferredTransmissions]	
The number of frames which experience a delay for the first transmission attempt on a particular interface because the medium is busy.		
Late Collisions	[dot3StatsLateCollisions]	
The number of times a collision is detected on a particular interface later than 512 bit-times into the transmission of a packet.		
Excessive Collisions	[dot3StatsExcessiveCollisions]	
The number of frames which could not be transmitted on a particular interface due to excessive collisions.		
Internal MAC Transmit Errors	[dot3StatsInternalMacTransmitErrors]	
The number of frames which could not be transmitted on a particular interface due to an internal MAC sublayer transmit error.		
Carrier Sense Lost	[dot3StatsCarrierSenseErrors]	
The number of times that the carrier sense condition was lost or never asserted when attempting to transmit a frame on a particular interface.		
Frames Too Long	[dot3StatsFrameTooLongs]	
The number of frames received on a particular interface that exceed the maximum permitted frame size.		
Internal MAC Receive Errors	[dot3StatsInternalMacReceiveErrors]	
The number of frames for which reception on a particular interface fails due to an internal MAC sublayer receive error.		

2.2.3.2 Ethernet Transceiver Status

```
  2.2.3.2. Ethernet Transceiver Status                    Record 1 of 1

 Port            Link           Chip            Duplex
Number          Status          Speed            Mode
------          ------          -----           ------
  2               Up            10 Mbps         Half Duplex

\ - return to menu    . - commands    TAB - next available field    ENTER - edi
```

Field Name	MIB	Comments
Port Number	[swEtherTransStatusIndex]	2
The Ethernet port number is 2.		
Link Status	[swEtherTransLinkStatus]	
Tells you if the link is up or down.		
Chip Speed	[swEtherTransSpeedStatus]	
If you have the Ethernet transceiver set to auto-negotiate the chip speed, this tells you at what speed it actually came up.		
Duplex Mode	[swEtherTransDuplexStatus]	
Displays the configuration status of the Transceiver at either full or half duplex mode.		

Checking the RF Port

Use the 2.2.4 RF Port Status screen to list RF ports and monitor link statistics. The screen displays the information and statistics for a given port.

2.2.4 RF Port Status

```
        2.2.4. RF Port Status                                Record 1 of 1

Port Number              :  3
Port Type                :  RF Base Port
Port Status              :  Online
RF data rate             :  5.5 Mbps
RF Channel               :  2414 Mhz


Bytes                IN :  0                     Bytes    OUT :  2703
Frames               IN :  749                   Frames   OUT :  901
Discards             IN :  0                     Discards OUT :  0

Digital Phase Lock Loop :  0
Frame Length Violation  :  0
Non Octet Aligned Frame :  0
Abort Sequence          :  0
CRC error               :  0
Overrun                 :  0
Carrier Detect Lost     :  0
Underrun                :  0
CTS Lost                :  0

\ - return to menu    . - commands    TAB - next available field    ENTER - edit
```

Field Name	MIB	Comments
Port Number RF physical port number.	[swRFPortIndex]	3
Port Type The type of port (driver) this status is displaying.	[swRFPortType]	• Base Port • Sub Port • Base Port Diag • Sub Port Diag
Port Status The operational status of the port.	[swRFPortStatus]	• On-line • Off-line
RF data rate The RF data rate for this port.	[swRFPortBW]	• 2 Mbs • 5.5 Mbs • 11 Mbs

Field Name	MIB	Comments
RF Channel	[swRFPortChannel]]	
The channel frequency in MHz.		
Bytes IN and OUT	[swRFPortInBytes] and [swRFPortOutBytes]	
The total number of incoming and outgoing bytes on this port.		
Frames IN and OUT	[swRFPortInFrames] and [swRFPortOutFrames]	
The total number of incoming and outgoing frames on this port.		
Discards IN and OUT	[swRFPortInDiscards] and [swRFPortOutDiscards]	
The total number of incoming and outgoing discarded frames (for any reason) on this port.		
Digital Phase Lock Loop	[swRFPortDPLLErrors]	
The number of Digital Phase Lock Loop error that occurred on this port.		
Frame Length Violation	[swRFPortFrameLength-Errors]	
The total number of frames with Frame Length Error received on this port.		
Non Octet Aligned Frame	[swRFPortFrameAlign-mentErrors]	
The total number of Framing Alignment errors on the port.		
Abort Sequence	[swRFPortAbortErrors]	
The total number of RF frames aborted for any reason on the port.		
CRC Error	[swRFPortCRCErrors]	
The total number of CRC errors on the port.		
Overrun	[swRFPortOverrunErrors]	Reception error
The number of buffer overflows for this port.		
Carrier Detect Lost	[swRFPortCarrier Detect-Lost]	Reception error
The number of times carrier detect was lost.		

Field Name	MIB	Comments
Underrun	[swRFPortUnderrunErrors]	Transmission error
The number of incomplete buffer errors in the communication processor for the port.		
CTS Lost	[swRFPortCTSLost]	Transmission error
The number of times clear to send was lost for the port.		

RF-DLC Screens

Use these screens to monitor the status of RF-DLC Base and Sub ports. They provide information about frames sent and received, port states, events, actions, etc. The screens in this section are all read-only.

Note The base station sends commands to the sub station and receives responses from the sub station.

Checking RF-DLC Base Port Status

The 2.5.1 RF-DLC Base Port Status screen displays statistics that show the number of frames transmitted or received as a response from all sub stations. On the base station, this screen shows a summary of activity from all the sub stations. On sub stations, the values all will be zero.

2.5.1 RF-DLC Base Port Status

```
        2.5.1. RF-DLC Base Port Status                      Record 1 of 1

Prt   SNRME      FRMR            IFrames                RR
No.                           TX          REC        TX          REC
--- ---------- ---------- ---------- ----------  ---------- ----------
3   4          0          127         655        120654      120434











 REJ TX    10                                                UA    2
 REJ REC   0                                                 DISC  0
 RNR TX    0             UI TX  0           XID TX  1        RD    0
 RNR REC   0             UI REC 0           XID REC 1        DM    0

\ - return to menu    . - commands    TAB - next available field    ENTER - edit
```

Field Name	MIB	Comments
Port No.	[swRFDLCBasePortIndex]	3

This is the physical RF port.

Field Name	MIB	Comments
SNRME	[swRFDLCBasePortSN-RME]	
The number of Set Normal Response Mode Extended (SNRME) commands sent to all sub stations. A UA is the expected response.		
FRMR	[swRFDLCBasePort-FRMR]	
The number of Frame reject responses sent from the sub station when it receives an invalid frame.		
IFrames TX	[swRFDLCBase-PortOutIFrame]	
The number of IFrames transmitted.		
IFrames REC	[swRFDLCBasePortInI-Frame]	
The number of IFrames received.		
RR - TX	[swRFDLCBase-PortOutRR]	
The number of Receive ready commands sent to all sub stations.		
RR - REC	[swRFDLCBasePort-INRR]	
The number of Receive ready responses received from all sub stations.		
REJ TX	[swRFDLCBase-PortOutREJ]	
The number of Reject commands sent to all sub stations.		
REJ REC	[swRFDLCBasePortInREJ]	
The number of Reject responses received from all sub stations.		
RNR TX	[swRFDLCBase-PortOutRNR]	
The number of Receive not ready commands sent to all sub stations.		
RNR REC	[swRFDLCBasePortIn-RNR]	
The number of Receive not ready responses received from all sub stations.		

Field Name	MIB	Comments
UI TX	[swRFDLCBasePortOu-tUI]	
The number of Unnumbered information commands sent to all sub stations.		
UI REC	[swRFDLCBasePortInUI]	
The number of Unnumbered information responses received from all sub stations.		
XID TX	[swRFDLCBase-PortOutXID]	
The number of Exchange station identification commands sent to all sub stations.		
XID REC	[swRFDLCBasePort-InXID]	
The number of Exchange station identification responses received from all sub stations.		
UA	[swRFDLCBasePortUA]	
The number of Unnumbered acknowledgement responses received from the sub station.		
DISC	[swRFDLCBasePort-DISC]	
The number of Disconnect commands sent to all sub stations.		
RD	[swRFDLCBasePortRD]	
The number of Request disconnect responses received from all sub stations.		
DM	[swRFDLCBasePortDM]	
The number of Disconnect mode responses received from all sub stations.		

Checking the Sub Port Status

You can access the 2.5.2 RF-DLC Sub Port Status screen on either the base station or the sub station. On the base station, this screen shows the status of all the base sub ports (sub station numbers). On the sub station, this screen shows the status of that sub station.

2.5.2 RF-DLC Sub Port Status

```
        2.5.2. RF-DLC Sub Port Status                        Record 1 of 1

Prt   SNRME      FRMR            IFrames                 RR              State
No.                            TX         REC        TX         REC
--- ---------- ---------- ---------- ----------  ---------- ----------   -----
3   4          0          655        127         120434     120654       NRM

 REJ TX   0                                                  UA    2
 REJ REC  10                                                 DISC  0
 RNR TX   0             UI TX  0           XID TX  1         RD    0
 RNR REC  0             UI REC 0           XID REC 1         DM    0

\ - return to menu    . - commands    TAB - next available field    ENTER - edit
```

Field Name	MIB	Comments
Port No.	[swRFDLCSubPortIndex]	
This is the physical RF port or sub station number.		
SNRME	[swRFDLCSubPortSN-RME]	
The number of Set normal response mode extended (SNRME) commands sent to the sub station. A UA is the expected response.		
FRMR	[swRFDLCSubPortFRMR]	
The number of Frame reject responses sent from the sub station when it receives an invalid frame.		
IFrames TX	[swRFDLCSub-PortOutIFrame]	
The number of IFrames transmitted.		

Field Name	MIB	Comments
IFrames REC	[swRFDLCSubPortInI-Frame]	
The number of IFrames received.		
RR - TX	[swRFDLCSub-PortOutRR]	
The number of Receive ready commands sent to the sub station.		
RR - REC	[swRFDLCSubPortINRR]	
The number of Receive ready responses received from the sub station.		
State	[swRFDLCSubPortState]	• ADP • NRM • NRM-W • NDM • NRD
The current state of the connection with the sub to the base. ADP is Automatic Discovery Protocol, NRM is Normal Response Mode, NRM-W is Normal Response Mode-Waiting, NDM is Normal Disconnect Mode, and NRD is Normal Request Disconnect.		
REJ TX	[swRFDLCSub-PortOutREJ]	
The number of Reject commands sent to the sub station.		
REJ REC	[swRFDLCSubPortInREJ]	
The number of Reject responses received from the sub station.		
RNR TX	[swRFDLCSub-PortOutRNR]	
The number of Receive not ready commands sent to the sub station.		
RNR REC	[swRFDLCSubPortIn-RNR]	
The number of Receive not ready responses received from the sub station.		
UI TX	[swRFDLCSubPortOu-tUI]	
The number of Unnumbered information commands sent to the sub station.		
UI REC	[swRFDLCSubPortInUI]	
The number of Unnumbered information responses received from the sub station.		

Field Name	MIB	Comments
XID TX	[swRFDLCSub-PortOutXID]	
The number of Exchange station identification commands sent to the sub station.		
XID REC	[swRFDLCSubPortInXID]	
The number of Exchange station identification responses received from the sub station.		
UA	[swRFDLCSubPortUA]	
The number of Unnumbered acknowledgement responses received from the sub station.		
DISC	[swRFDLCSubPortDISC]	
The number of Disconnect commands sent to the sub station.		
RD	[swRFDLCSubPortRD]	
The number of Request disconnect reponses received from the sub station.		
DM	[swRFDLCSubPortDM]	
The number of Disconnect mode responses received from the sub station.		

Checking the Polling Status

The following screen lists the sub stations and displays their IP addresses and the poll list on which they are currently listed. For more information about polling, see “Polling” on page 67.

2.5.3 RF-DLC Sub Poll Status

```
2.5.3. RF-DLC Sub Poll Status                          Record 1 of 1

  Sub Station            IP               Polling
    Number             Address            Status
    -------        ---------------        ------
      256           204.212.131.068      Inactive Poll List
```

Field Name	MIB	Comments
Sub Station Number The sub station number, which corresponds to the base sub port number.		
IP Address The IP address of the sub station.		
Polling Status		• Fast Poll • Slow Poll • Inactive Poll

The poll list on the base station where this sub station is currently listed.

Checking the RF Signal Status

You can check the RF signal status for the RF Base Sub Ports.

2.5.4 RF Signal Status

```
          2.5.4. RF-DLC Signal Status                          Record 0 of 0

        Signal         Noise
Port  Level (-dBm)   Level (-dBm)   Signal/Noise (dB)   Rcv Timeouts/Sec
----  ------------   ------------   -----------------   ----------------
256         95             95                0                   0

\ - return to menu    . - commands    TAB - next available field    ENTER - edit
```

Field Name	MIB	Comments
Port Number	[swSignalStatusIndex]	
The port number of the unit for which you are viewing this status.		
Signal Level (-dBm)	[swSignalStatusSig-nalLevel]]	
The detected signal level for this port. For example, a value of 55 is -55 dBm.		
Noise Level (-dBm)	[swSignalStatus-NoiseLevel]	
The detected noise level for this port. For example, a value of 85 is -85 dBm. A value of 95 is no noise detected.		
Signal/Noise (dB)	[swSignalStatusSignal-ToNoise]	
The signal to noise ratio. The value indicates Noise Level minus Signal Level.		

Field Name	MIB	Comments
Rcv Timeouts/Sec	[swSignalStatusRcvToRate]	

The rate of receiver timeouts.

Bridging Screens

Checking Bridge and Spanning Tree Status

The 2.3.1 Bridge and Spanning Tree Status screen is divided into two parts:

- Bridge Status shows you the bridge settings
- (If Spanning Tree is enabled) Spanning Tree Status shows you the settings for the Spanning Tree.

2.3.1 Bridge and Spanning Tree Status

```
             2.3.1. Bridge & Spanning Tree Status

              Bridge Status
              -------------
Bridge MAC Address     :  00:ba:d0:ba:be:00
Number of Bridge Ports :  2
Bridging Type          :  Transparent only


                       Spanning Tree Status
                       --------------------
Root ID       : 4241 00:ba:d0:ba:be:00     Bridge Priority      : 16961
Root Port     : 0                          Bridge Max Age       : 20
Root Cost     : 0                          Bridge Hello Time    : 2
Maximum Age   : 20                         Bridge Forward Delay : 15
Hello Time    : 2                          Forward Table Timeout: 300
Hold Time     : 1
Forward Delay : 15

Time Since Last Topology Change :  2108
Topology Changes                :  1


\ - return to menu    . - commands    TAB - next available field    ENTER - edit
```

Field Name	MIB	Comments
	Bridge Status:	
Bridge MAC Address	[dot1dBaseBridgeAddress]	
The MAC address used by the bridge as its unique identifier. The bridge MAC Address concatenated with Bridge Priority creates a unique Bridge ID which the Spanning Tree Protocol uses.		
Number of Bridge Ports	[dot1dBaseNumPorts]	
Minimum of 2 per unit, the Ethernet and the RF ports. On the base station, the number of bridge ports is equal to one plus the number of base sub ports.		

Field Name	MIB	Comments
Bridging Type	[dot1dBaseType]	
Currently Transparent only.		
	Spanning Tree Status:	
Root ID	[dot1dStpDesignatedRoot]	
The bridge identifier of the root of the Spanning Tree. This value is used as the Root Identifier in all Configuration Bridge PDUs originating from this node.		
Root Port	[dot1dStpRootPort]	
The number of the port offering the lowest cost path from this bridge to the root bridge.		
Root Cost	[dot1dStpRootCost]	
The cost of the path to the root bridge from this bridge.		
Maximum Age	[dot1dStpMaxAge]	This is the actual value the bridge is currently using.
The maximum age of Spanning Tree protocol information learned from the network on any port before it is discarded, in seconds.		
Hello Time	[dot1dStpHelloTime]	This is the actual value the bridge is currently using.
The amount of time between the transmission of Configuration bridge PDUs by this node on any port when it is the root of the Spanning Tree or trying to become so, in seconds.		
Hold Time	[dot1dStpHoldTime]	
The interval length during which no more than two Configuration bridge PDUs can be transmitted by this node, in hundredths of a second.		
Forward Delay	[dot1dStpForwardDelay]	This is the actual value the bridge is currently using.
Controls how fast a port changes its spanning state when moving towards the Forwarding state. This value determines how long the port stays in each of the Listening and Learning states, which precede the Forwarding state. This value is also used when a topology change has been detected and is underway to age all dynamic entries in the Forwarding database.		
Bridge Priority	[dot1dStpPriority]	
A value which is concatenated to the Bridge MAC address and the result is the Bridge ID. The Bridge ID is used in the Spanning Tree Protocol.		

Field Name	MIB	Comments
Bridge Max Age	[dot1dStpBridgeMaxAge]	
The value that all bridges use for Max Age when this bridge is acting as the root.		
Bridge Hello Time	[dot1dStpBridgeHelloTime]	
The value that all bridges use for Hello Time when this bridge is acting as the root.		
Bridge Forward Delay	[dot1dStpBridgeForwardDelay]	
The value that all bridges use for Forward Delay when this bridge is acting as the root.		
Forward Table Timeout	[dot1dTpAgingTime]	
The timeout period in seconds for aging out dynamically learned forwarding information.		
Time Since last Topology Change	[dot1dStpTimeSinceTopologyChange]	
The time since the last time a topology change was detected by the bridge entity.		
Topology Changes	[dot1dStpTopologyChanges]	
The total number of topology changes detected by the bridge since the management entity was last reset or initialized.		

For more information about these configuration settings, see "1.3.1 Bridge Configuration" on page 90

Checking Bridge Port Status

Use this screen 2.3.2 Bridge Port Status to monitor frame activity on the bridge port.

2.3.2 Bridge Port Status

```
        2.3.2. Bridge Port Status                          Record 1 of 1

Port Max       In           Out            In       MTU Exceeded
No.  Info    Frames        Frames       Discards      Discards
---- ---- ------------- ------------- ------------- -------------
2    1492 0             0             0             0

\ - return to menu    . - commands    TAB - next available field    ENTER - edi
```

Field Name	MIB	Comments
Port No.	[swBridgePortStatusIndex]	
The physical port number or base sub port (sub station) number. On a sub station, the bridge ports are 2 and 3. On a base station, the bridge ports are 2 and the sub station numbers.		
Max Info	[swBridgePortStatusMaxInfo]	
Maximum size of the information field that this port can transmit or receive.		
In Frames	[swBridgePortStatusInFrames]	Frames, including bridge management frames, are added into the count only if processed by the bridging function.
Total number of frames received on this port.		

Field Name	MIB	Comments
Out Frames	[swBridgePortStatusOut-Frames]	Frames, including bridge management frames, are added into the count only if processed by the bridging function.
Total number of frames transmitted on this port.		
In Discards	[swBridgePortStatusInDis-cards]	
In Discards is incremented when a packet comes in on a port that is not forwarding, or is destined for a non-forwarding port.		
MTU Exceeded Discards	[swBridgePortStatusMtu-ExceededDiscards]	
Number of frames that were discarded because they exceeded the maximum transfer unit size.		

Checking Spanning Tree Port Status

Use screen 2.3.3 Spanning Tree Port Status to check if a port is enabled for Spanning Tree and other statistics. To see the status of each port, press .N for the next port.

2.3.3 Spanning Tree Port Status

```
2.3.3. Spanning Tree Port Status                    Record 1 of 1

 Port Number              :  2
 Port State               :  Forwarding
 Port Status              :  Enabled
 Port Path Cost           :  10
 Designated Root ID       :  4241 00:ba:d0:ba:be:00
 Designated Cost          :  0
 Designated Bridge        :  4241 00:ba:d0:ba:be:00
 Designated Port          :  0002
 Port Forward Transitions :  1









\ - return to menu    . - commands    TAB - next available field    ENTER - edit
```

Field Name	MIB	Comments
Port Number The physical port number or base sub port (sub station) number. On a sub station, the bridge ports are 2 and 3. On a base station, the bridge ports are 2 and the sub station numbers.		
Port State The current state of this bridge port.		Forwarding
Port Status Whether this port is configured for bridging (enabled).		Enabled
Port Path Cost The contribution to the path cost towards the Spanning Tree root which includes this port.	[dot1dStpPortPathCost]	

Field Name	MIB	Comments
Designated Root ID	[dot1dStpPortDesignated Root]	
The unique Bridge ID of the root bridge in the Configuration BPDUs transmitted by the Designated Bridge for the segment to which the port is attached.		
Designated Cost	[dot1dStpPortDesignated Cost]	
The path cost of the Designated port of the segment connected to this port. This value is compared to the Root Path cost field in received bridge PDUs.		
Designated Bridge	[dot1dStpPortDesignated Bridge]	
The Bridge ID of the bridge which this port considers to be the Designated Bridge for this port's segment.		
Designated Port	[dot1dStpPortDesignated Port]	
The Port Identifier of the port on the Designated Bridge for this port's segment.		
Port Forward Transitions	[dot1dStpPortForwardTransitions]	
The number of times this port has transitioned from the Learning state to the Forwarding state.		

Transparent Bridging Table

2.3.4 Transparent Bridging Table

```
        2.3.4. Transparent Bridging Table                    Record 1 of 2

   MAC Address           Port                Status
   -----------           ----                ------
00:00:c4:1c:91:45         3                  self
00:ba:d0:ba:be:00         2                  self

\ - return to menu    . - commands    TAB - next available field    ENTER - edi
```

Field Name	MIB	Comments
MAC Address	[dot1dTPFdbAddress]	
The Ethernet MAC address learned from the transmitting station.		
Port	[dot1dTPFdbPort]	
The port number where MAC address was learned.		
Status	[dot1dTPFdbStatus]	• Other • Invalid • Learned • Self • Mgmt

The status of this entry. Other means none of the following. Invalid means this entry is no longer valid, but has not been flushed from the table. Learned means the MAC Address was learned from the network. Self means the MAC Address represents the port's MAC address. Mgmt means this entry was statically entered.

IP Routing Screens

The IP Routing status screens include:

- IP Protocol Status
- IP Address Table
- ICMP Status
- Arp Table

Checking IP Routing Status

Use the 2.4.1.1 IP Protocol Status screen to check the routing configuration, if packets are being forwarded correctly, and to troubleshoot routing problems. This screen also provides you with information on the number and type of packets being routed.

2.4.1.1 IP Protocol Status

```
         2.4.1.1. IP Protocol Status

Incoming Packets         :  0            Incoming Discards      :  0
Incoming Deliveries      :  0            Outgoing Discards      :  0
Forwarding Requests      :  0            Routing Discards       :  0
Outgoing Requests        :  0            No Route               :  0

Header Errors            :  0
Address Error            :  0
Unknown Protocol         :  0

Fragments Created        :  0            Reassembly Requests    :  0
Packets Fragmented OK    :  0            Packets Reassembled OK :  0
Fragmentation Failures   :  0            Reassembly Failure     :  0

Reassembly Timeout       :  8
Default Time to Live     :  64
Routing                  :  Not Forwarding

IP Forward Table Entries :  0



\ - return to menu    . - commands    TAB - next available field    ENTER - edit
```

This screen is read-only. The **Routing** field displays “Forwarding” when routing is enabled. To enable routing or change other parameters, go to screen “1.4.1 IP Protocol Configuration” on page 93,

Field Name	MIB	Comments
Incoming Packets	[ipInReceives]	
The total number of datagrams received from interfaces, including those received in error.		

Field Name	MIB	Comments
Incoming Deliveries	[ipInDelivers]	
The total number of input datagrams successfully delivered to IP user-protocols (including ICMP).		
Forwarding Requests	[ipForwDatagrams	
The number of input datagrams for which this entity was not their final IP destination, and an attempt was made to find a route toward their final destination.		
Outgoing Requests	[ipOutRequests]	
The total number of IP datagrams which local IP user-protocols (including ICMP0 supplied to IP in requests for transmission.		
Incoming Discards	[ipInDiscards]	
The total number of incoming packets that are discarded due to header, address, unknown protocol or reassemble failure errors.		
Header Errors	[ipInHdrErrors]	
The total number of input datagrams discarded due to errors in their IP headers, including bad checksums, version number mismatches, other format errors, time-to-live exceededs, errors discovered in processing their IP options, etc.		
Address Errors	[ipInAddrErrors]	
The number of input datagrams discarded because the IP address in their IP header's destination field was not a valid address to be received at this entity.		
Unknown Protocol	[ipInUnknownProtos]	
The number of locally-addressed datagrams received successfully but discarded because of an unknown or unsupported protocol.		
Reassembly Failures	[ipReasmFails]	
The number of packets which could not be reassembled.		
Outgoing Discards	[ipOutDiscards]	
The total number of IP datagrams for which no problem was found to prevent their transmission to their destination, but which were discarded (e.g., for lack of buffer space).		
No Route	[ipOutNoRoutes]	
The number of IP datagrams discarded because no route could be found to transmit them to their destination.		

Field Name	MIB	Comments
Fragmentation Failures	[ipFragFails]	
The number of IP datagrams that have been discarded because they could not be fragmented as required.		
Fragments Created	[ipFragCreates]	
The number of IP datagram fragments that have been generated as a result of fragmentation at this entity.		
Packets Fragmented OK	[ipFragOKs]	
The number of IP datagrams that have been successfully fragmented at this entity.		
Reassembly Requests	[ipReasmReqds]	
The number of IP fragments received which needed to be reassembled at this entity.		
Packets Reassembled OK	[ipReasmOKs]	
The number of IP packets successfully reassembled.		
Reassembly Timeout	[ipReasmTimeout]	
The maximum number of seconds which received fragments are held while they are awaiting reassembly at this entity.		
Default Time to Live	[ipDefaultTTL]	
A number which together with the Route Cost determines how many hops a packet is allowed to make before it is discarded. Each time a packet is forwarded, the Default Time to Live (TTL) is decremented by the Route Cost. The packet can continue to be forwarded as long as the Default TTL is not zero. This prevents packets from being forwarded in an endless loop.		
Routing	[ipForwarding]	
Indicates that this entity is acting as an IP gateway in that it is forwarding datagrams it receives that are not addressed to it.		

2.4.1.2 IP Address Table

```
2.4.1.2. IP Address Table                                Record 1 of 2

IP Port     IP Address          IP Mask        IP Broadcast         Reasm.Size
-------   ---------------    ---------------    ------------         ----------
2         134.196.034.002    255.255.000.000    1                    65535
3         196.028.145.069    255.255.255.000    1                    65535

\ - return to menu    . - commands    TAB - next available field    ENTER - edi
```

Field Name	MIB	Comments
IP Port	[ipAdEntIPIndex]	
The physical port configured for IP routing. The Ethernet port is 2; the RF port is 3.		
IP Address	[ipAdEntAddr]	
The IP address used to route packets on this port.		
IP Mask	[ipAdEntNetMask]	
The IP Mask to be used for the IP address.		
IP Broadcast	[ipAdEntBcastAddr]	1=Yes; 2=No
Whether IP broadcasts can be sent or received on this port.		
Reasm. Size	[ipAdEntReasmMask]	65535
The maximum size a reassembled packet can reach.		

Checking ICMP Activity

The 2.4.1.4 ICMP Status screen provides details on the type of ICMP datagrams that are received and transmitted.

2.4.1.4 ICMP Status

```
        2.4.1.4. ICMP Status


                                      Incoming:     Outgoing:

  Packets                          :  0             0
  Timestamp Requests               :  0             0
  Timestamp Replies                :  0             0
  ICMP-Specific Errors             :  0             0
  Destination Unreachable Errors   :  0             0
  Time Exceed Errors               :  0             0
  Address Mask Requests            :  0             0
  Address Mask Replies             :  0             0
  Echo Requests                    :  0             0
  Echo Replies                     :  0             0
  Source Quenches                  :  0             0
  Router Redirects                 :  0             0
  Parameter Problems               :  0             0




 \ - return to menu    . - commands    TAB - next available field    ENTER - edi
```

In this screen, the *Incoming* column reflects the number of ICMP packets received by the SkyWay, and the *Outgoing* column displays the number transmitted.

This screen is read-only.

Field Name	MIB (Incoming)	MIB (Outgoing)
Packets	[icmpInMsgs]	[icmpOutMsgs]
This is the total of all ICMP events (Incoming and Outgoing) listed in the rest of this table, including errors.		
Timestamp Requests	[icmpInTimestamps]	[icmpOutTimestamps]
The number of ICMP Timestamp request messages received.		
Timestamp Replies	[icmpInTimestampReps]	[icmpOutTimestam-pReps]
The number of ICMP Timestamp reply messages received.		
ICMP-Specific Errors	[icmpInErrors]	[icmpOutErrors]
The number of ICMP messages which the entity received but determined as having ICMP-specific errors (bad ICMP checksums, bad length, etc.)		

Field Name	MIB (Incoming)	MIB (Outgoing)
Destination Unreachable Errors	[icmpInDestUnreachs]	[icmpOutDestUnreachs]
The number of ICMP Destination Unreachable messages received. This error is generated if the Default Time to Live count = 0 or less.		
Time Exceeded Errors	[icmpInTimeExcds]	[icmpOutTimeExcds]
The number of ICMP Time Exceeded messages received.		
Address Mask Requests	[icmpInAddrMasks]	[icmpOutAddrMasks]
The number of ICMP Address Mask Request messages received.		
Address Mask Replies	[icmpInAddrMaskReps]	[icmpOutAddrMaskReps]
The number of ICMP Address Mask Reply messages received.		
Echo Requests	[icmpInEchos]	[icmpOutEchos]
The number of ICMP Echo Request messages received. The Ping utility generates an Echo Request to test communications with another unit.		
Echo Replies	[icmpInEchoReps]	[icmpOutEchoReps]
The number of ICMP Echo Request messages received. The Ping utility expects to receive this type of packet in response to an Echo Request.		
Source Quenches	[icmpInSrcQuenchs]	[icmpOutSrcQuenchs]
The number of ICMP Source Quenches messages received.		
Router Redirects	[icmpInRedirects]	[icmpOutRedirects]
The number of ICMP Redirect messages sent.		
Parameter Problems	[icmpInParmProbs]	[icmpOutParmProbs]
The number of ICMP Parameter Problem messages received.		

Checking the Address Resolution Protocol Table

The Address Resolution Protocol (ARP) table contains the physical mapping of MAC to IP addresses. Use this table to add static IP ARP entries. Press .A to begin editing.

2.4.1.5 ARP Table

```
      2.4.1.5. ARP Table                                    Record 0 of 0

  Port         IP Address           MAC Address            Type
  ----       ---------------     -----------------        ------



\ - return to menu    . - commands    TAB - next available field    ENTER - edit
```

Field Name	MIB (Incoming)	MIB (Outgoing)
Port	[ipNetToMediaIPIndex]	
The IP port at which the IP address can be reached.		
IP Address	[ipNetToMediaNetAd-dress]	
The IP address.		
MAC Address	[ipNetToMediaPhysAd-dress]	
The physical or MAC address.		
Type	[ipNetToMediaType]	• STATIC • DYNAMIC • INVALID
Whether this entry is static or dynamic. Static values are user-entered, and dynamic entries are learned from the network.		

Base Station States

The following table describes base station states:

States	Description
Initialization	No communications session exists between the base station and the sub station. The base station initializes the session.
Wait for Initial Response	The base station has sent an RR command frame (with poll bit set) and is waiting for a response.
Wait for Set Mode Response	The base station has sent an SNRME command frame and is waiting for a response.
Wait for XID Response	The base station has sent an XID command frame and is waiting for a response.
Connected	The session has been established and I-Frames may be exchanged.
Wait for any Response	The base station has sent an supervisory (RR, RNR, REJ) or I-Frame and is waiting for a response.
Disconnected	The base station has sent a DISC command and is waiting for a response.

The following table describes base station events:

Events:	Description:
Poll timer timeout	The poll timer has timed out indicating that it is now time to poll the sub station.
DM Received	A DM response frame was received from the sub station.
RR Received	A RR response frame was received from the sub station.
UA Received	A UA response frame was received from the sub station.
XID Received	A XID response frame was received from the sub station.
Data to transmit	The base station has a frame queued to transmit to the sub station.
I-Frame Received	An I-Frame was received from the sub station.

Events:	Description:
RNR Received	An RNR frame was received from the sub station.
REJ Received	An REJ frame was received from the sub station.
FRMR Received	An FRMR frame was received from the sub station.
RD Received	An RD frame was received from the sub station.
Response TO	The response timer expired indicating that the sub station did not send a response frame within the expected time frame.

The following table describes base station actions:

Actions:	Description:
Send RR Poll	The RR command frame with poll bit set queries the sub station to see if it has data to send or if it has a change in status. Also, the RR carries the Nr count acknowledging the Nr-1 frame sent by the sub station.
Send SNRME	The SNRME frame starts the communications session with the sub station. It resets the Nr and Ns counts.
Send XID	The XID command sends configuration information to the sub station.
Set Poll Timer	The poll timer generates a poll timeout event upon expiration of the poll timer.
Set Response Timer	The response timer generates a response timeout event upon expiration of the response timer.
Send DISC	The DISC command terminates the communications session with the sub station.
Send I-Frame	I-Frames carry bridged and routed LAN traffic.
Send UI-Frame	UI-Frames carry bridged and routed broadcast LAN traffic.
Send RNR Frame	The RNR frame indicates to the sub station that the base station is congested and will have to retransmit previously sent I-Frames.

The following table describes base station timers:

Timers:	Description:
Poll Timer	The poll timer determines when the base station should send a poll frame to the sub station.
Response Timer	The response timer is set every time a frame is transmitted to the sub station and a response frame is expected back. If this timer expires, it indicates that the sub station did not respond within the expected time frame.

Sub Station States

The following table describes sub station states:

States:	Description:
Disconnected	No communications session exists between the base station and the sub station.
Connected	The sub station has an active communication session with the base station. I-Frames may be exchanged only in the connected state.

The following table describes sub station events:

Events:	Description:
RR Command Received	Receive Ready command received from the base station.
RNR Command Received	Receive Not Ready command received from the base station.
REJ Command Received	Reject Command received from the base station.
SNRME Command Received	Send Normal Response Mode Extended command received from the base station.
XID Command Received	Exchange station identification command received from the base station.
I-Frame Received	Information frame received from the base station.
UI-Frame Received	Unnumbered frame received from the base station.
Shutdown Event	Disconnect received from the base station.

The following table describes sub station actions:

Actions:	Description:
Send DM	A DM response frame replies to all frames received when in the Disconnected state except for a UI or a SNRME frame.
Send UA	A UA response frame replies to a received DISC or SNRME command frame.
Send XID	An XID response frame replies to a received XID command frame.
Send RD	An RD response frame replies to any poll frame in order to initiate a disconnect with the base station.
Send RR	An RR response frame acknowledges the reception of I-Frames.
Send RNR	An RNR response frame indicates to the base station that the receiver is congested.
Send REJ	An REJ response frame indicates to the base station that an error has been detected in a received frame.
Send I-Frame	The I-Frame carries bridged and routed LAN traffic and is sent in response to either a supervisory or I-Frame.

Status Summary

Checking the Status Summary

The 2.6 Status Summary screen is useful when you want to check the global parameters for all ports.

2.6 Status Summary

```
        2.6. Status Summary                                   Record 1 of 3

 Port      Port                  Physical
Number     Type                  Address              Bridging       IP
------ --------------------  -----------------       --------       --
  1    Serial RS-422         00:00:00:00:00:00       No              No
  2    Ethernet 100Mbit      00:ba:d0:ba:be:00       No              Yes
  3    RF-DLC Base Port      00:00:c4:1c:91:45       No              Yes

\ - return to menu    . - commands    TAB - next available field    ENTER - edit
```

Field Name	MIB (Incoming)	MIB (Outgoing)
Port Number		• 1 - Serial port • 2 - Ethernet port • 3 - RF port • 256 - 512 (base sub ports)
The port number for this record.		
Port Type The type of port to which this row of statistics apply.		
Address The MAC address of this port.		

Field Name	MIB (Incoming)	MIB (Outgoing)
Bridging Whether bridging is enabled for this port.		
IP Whether IP routing is enabled for this port.		

Chapter 7: Troubleshooting Skyway

Troubleshooting your SkyWay system isn't as complicated as you may think. Although there are a number of different elements that may be the source of the problem, if you approach troubleshooting systematically, you can often correct the problem yourself, or perhaps with a little help from Solectek Technical Support.

This chapter contains a flow chart to help you troubleshoot your system. It also gives you a list of items to have ready when you need to call Solectek for assistance.

This chapter provides information on:

Symptom/Action Flowchart..... 172

Before You Call Solectek Tech Support..... 173

Symptom/Action Flowchart

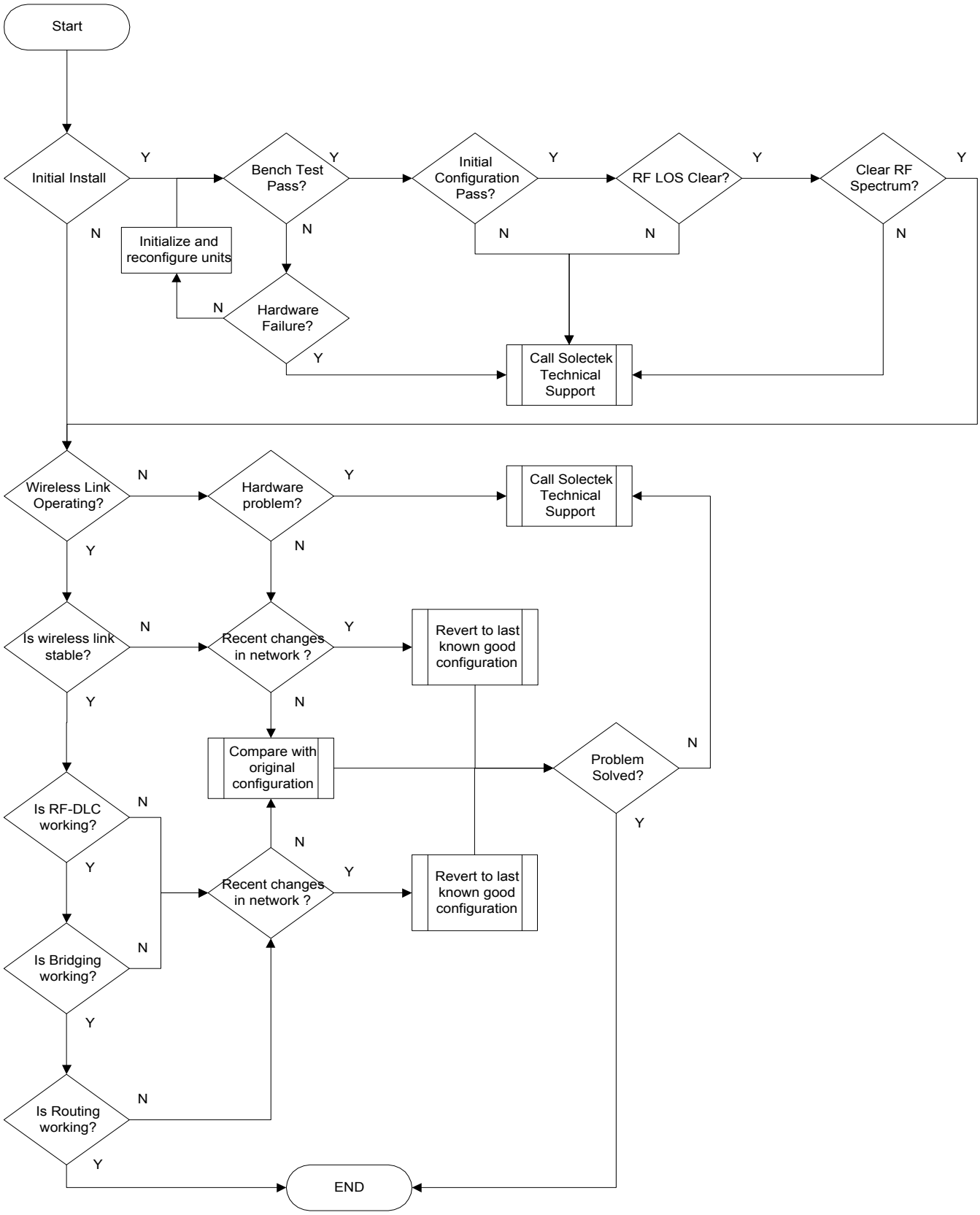

SOLECTEK

Before You Call Solectek Tech Support

Before you contact Solectek for technical assistance, attempt to troubleshoot the problem by following the flowchart (see "Symptom/Action Flowchart" on page 172). If you cannot resolve it yourself, have the items described in this section ready to provide to the Technical Support Engineer.

Detailed description of the problem

Be prepared to clearly explain the type of problem you are having.

2.1.1 General Status and Control Information

This information is very important to the Technical Services Engineer that will assist you. Perhaps the easiest way to provide this information is to capture and save the 2.1.1 General Status and Control screen.

To capture a screen:

1. Go to screen 2.1.1. General System Status and Control.
2. On the Hyperterminal menu bar, select Edit | Select All.
3. Type **Ctrl-C** to copy the screen to the Windows clipboard.
4. From Windows Start, click Programs | Accessories | Notepad. A Notepad window opens.
5. Type **Ctrl-Insert** to paste the screen capture into the Notepad window.
6. From the Notepad menu bar, click File | Save As and enter a file name (for example **211GenSysStats.txt**). The extension defaults to .txt.

The following is an example:

```
2.1.1. General Status and Control *

 Product Code          :  Skyway Bridge
 Serial Number         :  12
 Board Revision        :  Version 1
 Software Version      :  Version 1.0
 Media Type            :  Twisted Pair
 RF Power Type         :  High Power
 County Code           :  United States
 Antenna Type          :  No antenna
 DRAM Size             :  32 Mb
 DRAM Usage (bytes)    :  4258216
 FLASH Size            :  8 Mb
 FLASH Usage (bytes)   :  2589520
 VCO type              :  Package
 Operational for       :  22000
 Last Failure Reason   :  No crash dump


 Watchdog Timeout      :  200010     0 - watchdog timer off
                                     each unit is 1.5ms



\ - return to menu    . - commands    TAB - next available field    ENTER - edit
```

Network Configuration

Have your network information ready, including:

- Network diagram
- Network configuration
- Protocols
- Applications

RF Network Configuration

Be prepared to give the Technical Services Engineer your RF configuration, including the distances between each point, the type of antenna at each point, base station, sub station, etc.

Logical Network Map

Have on hand a topology diagram of your network, if it is available.

Bench Test Results

Provide information from the original bench test you performed on the unit.

Appendix A: Run-time Menu Tree

Screen	Description
1	Configuration Menu
1.1	System Configuration Menu
1.1.1	Network Management Security Configuration (Requires User Level = Super; no SNMP access)
1.1.2	Network Management System Configuration
1.1.3	User Access Configuration Menu
1.1.3.1	Add a User (Requires User Level = Super; no SNMP access)
1.1.3.2	Users (Requires User Level = Super; no SNMP access)
1.1.4	General Parameters Configuration
1.2	Port Configuration Menu
1.2.1	Serial Port Configuration Menu
1.2.1.1	Serial Port Configuration
1.2.1.2	Serial Transceiver Configuration
1.2.2	Ethernet Port Configuration Menu
1.2.2.1	Ethernet Port Configuration
1.2.2.2	Ethernet Transceiver Configuration

Screen	Description
1.2.3	RF Port Configuration Menu
1.2.3.1	RF Link Layer Configuration Menu
1.2.3.1.1	RF Base Port Configuration
1.2.3.1.2	RF Sub Port Configuration
1.2.3.1.3	RF Base Sub Port Configuration
1.2.3.1.4	ADP Substation Configuration
1.2.3.2	RF Diagnostic Port Configuration
1.2.3.3	RF Transceiver Configuration
1.2.3.4	Automatic Level Control
1.3	Bridge Configuration Menu
1.3.1	Bridge Configuration
1.3.2	Bridge Ports Configuration
1.4	Router Configuration Menu
1.4.1	IP Protocol Configuration
1.4.2	IP Port Configuration
1.4.3	IP Static Routes Configuration
1.4.4	BOOTP Configuration
1.5	Configuration Summary
2	Status and Control Menu
2.1	Menu
2.1.1	General Status and Control
2.1.2	Network Management Status Menu
2.1.2.1	SNMP Status
2.1.2.2	SNMP Trap History
2.1.3	Error Log Screen
2.2	Port Status and Control Menu
2.2.1	Generic Port Status and Control
2.2.2	Serial Port Status

Screen	Description
2.2.3	Ethernet Port Status Menu
2.2.3.1	Ethernet Port Status
2.2.3.2	Ethernet Transceiver Status
2.2.4	RF Port Status
2.3	Bridge Status Menu
2.3.1	Bridge & Spanning Tree Status
2.3.2	Bridge Port Status
2.3.3	Spanning Tree Port Status
2.3.4	Transparent Bridging Table
2.4	Router Status Menu
2.4.1	IP/ICMP/ARP Menu
2.4.1.1	IP Protocol Status
2.4.1.2	IP Address Table
2.4.1.3	ICMP Status
2.4.1.4	ARP Table
2.4.2	UDP/BOOTP Menu
2.4.2.1	UDP Status
2.4.2.2	UDP Listen Table
2.4.2.3	BOOTP Status
2.5	RF-DLC Status Menu
2.5.1	RF-DLC Base Port Status
2.5.2	RF-DLC Sub Port Status
2.5.3	RF-DLC Sub Poll Status
2.5.4	RF-DLC Signal Status
2.6	Status Summary
3	Utilities Menu
3.1	File Transfer Utilities Menu
3.1.1	TFTP File Transfer Menu

Screen	Description
3.1.1.1	TFTP Server Configuration
3.1.1.2	TFTP File Transfer
3.1.2	Ymodem File Transfer
3.1.3	Xmodem File Transfer
3.1.4	File Directory
3.2	Ping Utility
3.3	Flush Tables
4	Diagnostics Menu
4.1	RF Base Radio Test
4.2	RF Sub Radio Test
4.3	Field Support
4.3.1	LMX Synthesizer Field Support
4.3.2	Modulator/Demodulator Field Support
4.3.3	Baseband Processor Registers Field Support
4.3.4	Automatic Level Control Field Support
5	Start Application
6	Log Off

Appendix B: BIOS Menu Tree Summary Table

Screen	Description
1	Configuration Menu
1.1	System
1.2	Serial Port
1.3	Serial Transceiver
1.4	Ethernet Port
1.5	Ethernet Transceiver
1.6	Factory Configuration
2	Diagnostics
2.1	DRAM Diagnostics
2.2	Flash Diagnostics
2.3	Ethernet Diagnostics
2.4	Loop Through All Diagnostics
3	Files
4	Utilities
4.1	YMODEM
4.2	XMODEM
4.3	Configuration Database Service

Screen	Description
4.4	Real Time Clock
5	Error Log
6	User Screens
6.1	Add a User
6.2	Users
7	Reset SkyWay
8	Start Application
9	Log Off

Appendix C: Interface Specifications and Pinouts

The SkyWay bridge/router uses these cables:

- an LMR-400 RF cable connects to the antenna
- a DC Power cable connects to an DC converter inside the building
- an Administration Console (serial) cable connects to a terminal, workstation, or dedicated modem inside the building
- either a 10 Base-T/100 Base-TX or 100 Base-FX Ethernet cable connects to a LAN server inside the building

Caution Although Solectek does not recommend it, you may find it necessary to cut the connectors off the cables so that you can feed the cables through conduit in the roof inside the building. Cut only the connectors on the **indoor** side (not those that connect directly to the SkyWay) from the ends of the DC power cable, serial cable, and 10 Base-T/100 Base-TX Ethernet cables only - **never** cut the RF cable or the 100 Base-FX fiber optic cable. After feeding the cable through the conduit, use the pinout information provided in this Appendix to reattach the connectors to the cables.

DC Power Cable (Female DC Jack)

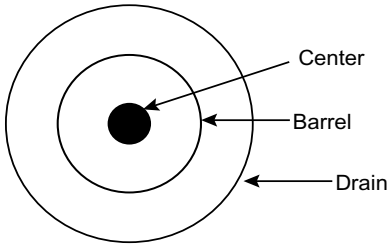

Pin Number	Purpose	Color
Barrel	Ground	WHT
Center	Hot	BLK
Drain	Not Connected	

Note If you find it necessary to cut this connector, cut the cable and not into the molded area around the connector.

Console Cable (Serial RS-422: DB9)

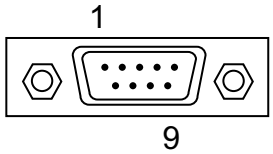

Pin Number	Color
1	ORN/WHT
2	WHT/ORN
3	GRN/WHT
4	WHT/GRN
5	BLU/WHT
6	Not connected
7	Not connected
8	Not connected
9	BRN/WHT

10 Base-T/100 Base-TX (Ethernet Cable: RJ-45)

Note: Do not cut the 100 Base-FX (fiber optic) cable.

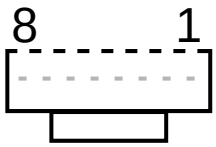

Pin Number	Color
1	WHT/ORN
2	ORN/WHT
3	WHT/GRN
4	BLU/WHT
5	WHT/BLU
6	GRN/WHT
7	WHT/BRN
8	BRN/WHT

Appendix D: Detailed Product Specifications

Features and Interfaces:	
RF Modem Speeds:	11 Mbps, 5.5 Mbps, and 2 Mbps (by menu selection)
RF Protocol:	Solectek polling protocol for reliable links of any distance without RF "signal capture" or "hidden node" effects.
Wide Area Network Architectures:	Point-to Point (one-to-one) and/or Multi-Point (one-to-many), 64 sub station maximum, standard with all SkyWay models. Multiple systems may be co-located and run back-to-back to extend link distances and/or cover multiple sectors from the same mast.
Wireless Link Distance:	Up to 30 miles (48 Km) per pair with clear radio line of sight depending on antenna selected. All equipment *(except antenna and cables)* included with standard system. No additional amplifiers required.
Media Interfaces, Bridging, and Routing Protocols:	IEEE 802.3 Ethernet: IEEE 802.1D Spanning Tree, transparent MAC layer bridging, IP static routing.
LAN Interfaces:	Ethernet only: 10/100 Mbps twisted-pair 100Base-FX (fiber optic)
Management Capabilities:	• SNMP MIB II, Custom MIB in-band • TFTP in-band • RS-422, ANSI Console, X-modem, Y-modem

Radio Characteristics:	
Frequency:	2.4 to 2.4835 GHz
Radio Channels:	From 2.4 to 2.475 GHz @6 MHz intervals--11 channels
RF Coding:	Direct Sequence Spread Spectrum (DSSS)
Bit Error Rate (BER):	• 11 Mbps 1x10-8 @-83 dBm • 5.5 Mbps - 1x10-8 @ -86 dBm • 2 Mbps - 1x10-8 @ -90 dBm
RF Security Codes:	128 variations available
Radio License Required:	No user license required. Certified for user installation and unlicensed operation per FCC 15.247 and FCC 15.203.
Hardware:	
Chassis Type:	Single, sealed, mast-mounted unit. UL Outdoor certifications.
Chassis Specifications:	8.5" W x 14" L x 3.5" H (.21m W x .35m L x .08m H)
Chassis Environmental:	-30C to +70C
Power Supply:	Input: Autosensing 100-250 VAC / Output: +48 VDC
Power Consumption:	.5 amps @ 48 VDC
Certifications:	FCC Class A, UL Outdoor, Industrie Canada, ETSI
SkyWay to Antenna Cable:	8 foot (2.4m) chassis-to-antenna cable supplied
SkyWay to Hub/ Router:	Standard cable available in lengths of 100 feet, 200 feet, and 300 feet (30m, 60m, and 90m)
Antennas:	Various types of FCC certified grid, flat panel, sectoral, and omni-directional antennas are available from Solectek depending on wireless link distance and application requirements. Antennas sold separately.
Options:	100Base-FX Fiber, or country-specific RF power levels (e.g., ETSI for Europe)

Appendix E: Supported Protocols

Supported protocols are those that are bridged or routed, and those used for managing SkyWay and file transfer.

Bridged Protocols

SkyWay supports all standard protocols on standard Ethernet for bridging:

- NetBEUI
- NetBIOS
- DECNet
- Ethertalk
- Any IEEE 802.3 or EtherII Ethernet Frame
- 802.1d Spanning Tree Protocol (STP)

Routed Protocols

SkyWay supports the following protocols that are routed:

- IP Version 4 with support for BOOTP Relay and Proxy ARP
- Static IP Routing only

Management Protocols

SkyWay supports the following protocols for managing the SkyWay or for file transfer:

- SMNPv1 and SNMPv2
- TFTP
- PING (ICMP Echo)
- Xmodem and Ymodem (serial file transfer)
- VT100 console (serial console)

Appendix F: Error Codes

The following table contains the error status codes for SNMPv2 and their corresponding codes for SNMPv1:

Error Number	Error Status (SNMPv2)	Error Status (SNMPv1)
0	No Error	No Error
1	Too Big	Too Big
2	No Such Name	No Such Name
3	Bad Value	Bad Value
4	Read Only	Read Only
5	General Error	General Error
6	No Access	No Such Name
7	Wrong Type	Bad Value
8	Wrong Length	Bad Value
9	Wrong Encoding	Bad Value
10	Wrong Value	Bad Value
11	No Creation	No Such Name
12	Inconsistent Value	No Such Name
13	Resource Unavailable	General Error

Error Number	Error Status (SNMPv2)	Error Status (SNMPv1)
14	Commit Failed	General Error
15	Undo Failed	General Error
16	Authorization Error	No Such Name
17	Not Writable	No Such Name
18	Inconsistent Name	No Such name

Appendix G: SNMP Trap Messages

The following table contains the SNMP traps, and a short description.

SNMP Trap Name	Description
coldStart	Indicates the unit is reinitializing.
linkDown	Indicates a failure in one of the communication links.
linkUp	Indicates a communication link has been reestablished.
authenticationFailure	Indicates the intended recipient of a packet was not properly authenticated.
newRoot	Indicates that the sending entity has become the new root of the Spanning Tree.
topologyChange	Indicates that the bridge's ports transitioned from the Learning state to the Forwarding state, or from the Forwarding state to the Blocking state, except when a newRoot trap is sent for the same transition.

Appendix H: Installation Recording Form

Use this form to record installation information.

Date Installed:

Location/Address:

Location Coordinates:

MAC Address:

Serial Number:

Base or Sub: RF Port Mode:

For Sub Station: Sub Station Number:

RF IP Address:	IP Address:	Network Mask:
IP Address:	Port 3	Port 3
RF Channel Number:	Port 2	Port 2

Antenna Type:

Antenna Polarization:

Signal Level:

Signal/Noise Ratio:

For Base Station: Number of attached Sub Stations

Antenna Mounting Height:

Azimuth of Antenna Centerline:

Is Antenna Mast or Tower Grounded?

Cable Length:	RS-422:
	Ethernet:
	Power:
Routing:	Enabled or Disabled

Appendix I: Sources of SNMP Management Software

The following SNMP managers are available:

1. HP Open View (Hewlett-Packard)

   Visit www.openview.hp.com/contact/ and look for an authorized reseller near you.

2. SNMPC Network Management for Windows

   Castle Rock Computing
   12930 Saratoga Ave.
   Saratoga, CA 95070
   www.castlerock.com

3. Catalyst

   Visit www.catalyst.com and either purchase online or look for an authorized reseller near you.

Appendix J: Glossary and Basic Concepts

This chapter provides a list of important terms and basic concepts you should understand while working with SkyWay.

It includes the following information:

Basic Concepts 198

Units of Measure 201

Connection Types 203

Antennas 204

Protocols 208

Equipment 209

Site Survey 210

Basic Concepts

Radio Signals

To visualize radio (RF) waves, consider the waves created when an object moves in water. Water waves are strongest near their source, but they decrease in size as they spread in all directions.

Radio waves fan out from their source in a similar manner. They travel best in empty space, but they can also pass through gasses, such as air, and many other substances. The lower the frequency of an RF signal, the more substances it can penetrate. The ability of a directional antenna to focus radio waves is analogous to a magnifying glass focusing sunlight into a very concentrated hot spot.

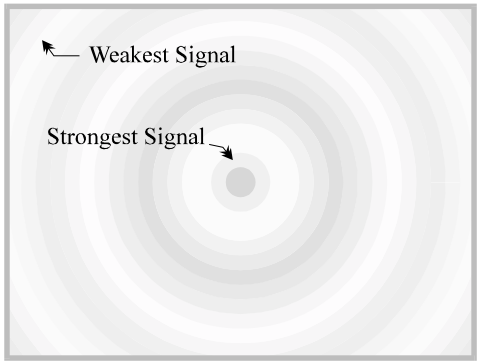

A *directional antenna* focuses the waves in one direction. It forms them into a conical shape that makes them stronger and enables them to travel greater distances.

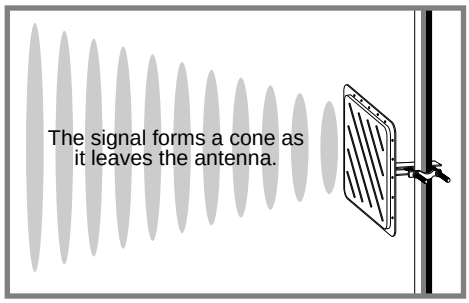

In the same way that light is focused by a magnifying glass, an RF signal shaped by an antenna is strongest within a narrow area at the center of the cone. We call this area the center lobe. For optimum long-distance reception, an antenna must be aligned to receive the center lobe signal, and the signal path must be free of obstructions.

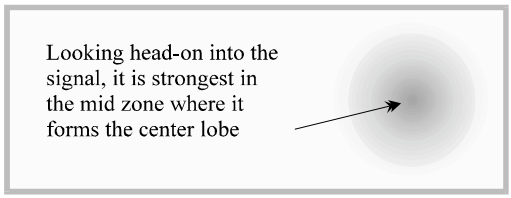

Frequency is the cycling rate of the signal wave. Amplitude is the height or strength of the signal wave.

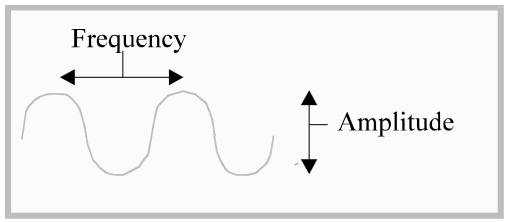

A radio can be tuned to a frequency so that the receiver is aligned with the peaks and valleys of the RF wave. The receiver can then detect when the wave is *out of phase*.

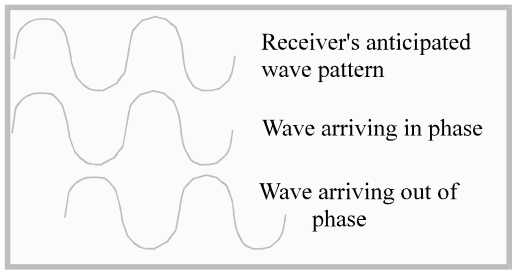

Radio waves can carry messages in different ways. The radios in our homes and cars convey sounds in a continuous stream (analog). The signals are strong, and the sounds are inscribed in the wave as small variations in the amplitude (AM) or frequency (FM).

Phase Shift Key. There are also many ways to carry digital radio signals. One of the common choices is Phase Shift Key (PSK). PSK shifts the phase of the signal to indicate the status for each bit of data in the message. Digital, on/off, phase-shift signals are easier to decipher than the countless variations in an analog sound signal.

ISM Bands

The FCC regulates the available frequencies to support a maximum number of users. By placing limits on signal strength (wattage and gain), the FCC has been able to accommodate the needs of multiple broadcasters in high-use areas with three small bands of frequency. If you comply with FCC restrictions, you may broadcast within the Industry, Science, and Medicine (ISM) bands without a license. The ISM bands include the 2.4 GHz band, the 902-928 MHz band, and the 5.725-5.850 GHz band.

Solectek products are approved for unlicensed broadcasting within the ISM bands if used in the packaged configurations approved by the FCC. To avoid FCC penalties and maintain your warranty, you must use Solectek products in their FCC-approved configurations. It is illegal to substitute cables, antennas, or other system components.

2.4 GHz Frequency Characteristics. The 2.4 GHz band is good for long-distance transmissions. It is rarely affected by static interference. There are multiple channels within the 2.4 GHz band.

Spread Spectrum

Spread spectrum spreads the transmission over different frequencies within its assigned bands. There are four variations of spread spectrum technology, but for internetworking purposes Direct Sequence Spread Spectrum (DSSS) with DPSK is the one most frequently used. DSSS continuously distributes the signal across a portion of the frequency band. DSSS resists interference from other RF signals, static from nearby electronic devices, and fading. DSSS is also highly secure because the signal appears as noise to non-DSSS receivers or DSSS receivers that are set to process a different spectrum.

Units of Measure

Attenuation and Gain

Attenuation is a decrease in amplitude due to signal absorption or dispersion. *Gain* is an increase in amplitude due to different forms of signal enhancement, such as the use of an antenna to focus the signal. Amplitude and gain are measured in decibels (dB).

Antenna gain is measured relative to the strength of the signal you would receive at any given distance using an antenna with no gain (such as a dipole or theoretic Isotropic antenna).

The antennas at both ends of the link can enhance signal gain. The total gain for a connection between two antennas is the product of the gains for both antennas.

Signal Measurement

To measure the size and strength of a signal meaningfully, we must consider the following:

- A signal widens with distance. To calculate the height and width of a signal, we must know the distance from its source.
- A signal has no distinct outer edge. It is strongest in a narrow focused area (center lobe), and it fades out gradually as distance increases from the center lobe.

How we measure the cone – To indicate the shape of the cone, we measure its expansion in degrees.

How we measure signal strength – We measure signal strength relative to the center point where the signal is strongest, but we generally do not say how strong the signal is at that point.

How we measure signal width – To avoid measuring from a nebulous edge, we measure across the center point at different bands of signal strength. The number of decibels (dB units) indicates threshold points relative to the center point.

For example, the beam width of the Solectek dish antenna we define as 17.5× maximum at 3 dB elevation. Three dB is a threshold within the cone where the signal's strength is 50% lower than its strength at the center. The drawing below shows the beam width at different dB increments relative to the center of a signal formed by a dish antenna.

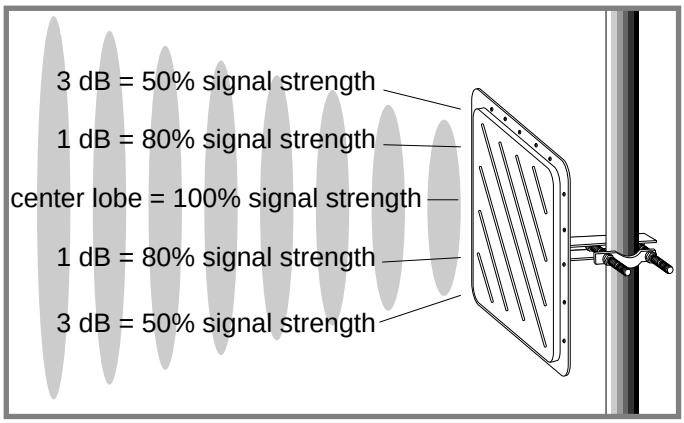

Decibel. The decibel (dB) is used as a measure of both attenuation and gain.

It measures signal strength relative to some type of reference signal. Decibel measurements are often referenced to the following values:

- The signal at its source
- The center point in the cone radiating from a directional antenna at any distance from its source.
- One milliwatt. dBm is the unit of measure used when signal strength is measured in decibels relative to one milliwatt.
- An antenna with no gain. dBi is the unit of measure used when signal strength is measured in decibels relative to a fictitious isotropic antenna with no gain.

The decibel is a logarithmic measure calculated in base-ten. At 3 dB, a signal has half the strength of the center lobe signal (not one-third the strength), and a gain of six dBi is four times stronger than the signal from an antenna with no gain (not six times stronger).

EIRP. *Effective Isotropic Radiated Power* (EIRP) is a measure of source signal strength that combines broadcasting power (measured in watts) with the effect of antenna signal gain (measured in dBi).

Fading. Temporary reductions in received signal strength are known as *fading*. Fading normally results from intermittent interference. Fade margin is a margin of extra signal strength built into the system to compensate for fading. For terrestrial links, the most common cause of fading is multipath (deflected signals arriving out of phase) and foliage within the signal path.

Interference. *Interference* refers to anything that blocks or degrades an RF signal. There are three basic forms of interference:

- Atmospheric interference can result from sky noise or lightning in the signal path.
- RF interference is generally caused by nearby activity in the same RF band (in-band interference). Also very strong out-of-band activity can interfere with an RF signal. Any wireless equipment can be a potential source of interference.
- Objects in the signal path can cause interference. The bending of signals as they pass around obstructions or are deflected by them is known as diffraction. Diffraction can damage signal quality if the diffracted signals arrive out of phase. A glass window can attenuate the signal to some extent. Some types of mirrored glass can almost totally block the signal. Signals passing through the side of a wooden building or a forest are also attenuated. Wet leaves can affect a signal substantially. The success of an RF link depends on a clear line of sight.

Connection Types

LAN. A Local Area Network (LAN) links workstations, processors, and other equipment within a local area, such as the inside of a building.

WAN. A Wide Area Network (WAN) is a network with connections spanning broader distances than a LAN and typically with connections to the Public Switched Telecommunications Network (PSTW). A WAN might connect locations in different buildings or different geographic regions.

Internetwork. An internetwork is formed by linking networks to other networks or devices. For example, a link between local area networks in different buildings creates an internetwork.

Point-to-Point. A point-to-point connection is a direct link between locations.

Multipoint. A network or internetwork with multiple sites. A large multipoint connection generally uses a central site to pass messages between the locations, and the individual locations (substations) have direct connections to the central site, but not to each other.

Antennas

Antennas come in different configurations to serve different needs. To span large distances, you must narrow the signal into a focused beam. The more focused is the signal, the greater is the gain. Since narrowing the signal increases the gain, you are allowed to exceed six dB only if you reduce the power to less than 1 watt under FCC rule Part 15.247. On the other hand, a 360° omnidirectional antenna has only a fourfold gain, so it can use the maximum allowable one watt of power.

Antenna Types

Directional. A directional antenna focuses the signal into a narrow beam. For 2.4 GHz systems, dish antennas achieve the highest gain and span the greatest distances. Solectek's dish antenna has 21 dBi of gain, and when using a transmit power of 15 dBm (a small fraction of one watt) the EIRP is 36 dBm (the FCC maximum allowable). In the 902-928 MHz range, yagi antennas achieve the highest gain and span the greatest distances.

In addition to concentrating signal strength, directional antennas also:

- Reduce the strength of second Fresnel zone reflections, thus reducing the potential for interference.
- Reduce interference from other RF devices within the same frequency range at distances closer than the target antenna.

Multidirectional. Multidirectional antennas are used for connections where several interfacing antennas are located in the same general direction. To achieve directionality with a 2.4 GHz system, Solectek uses an antenna with a sectoral. Because multidirectional antennas have a more focused beam than omnidirectional antennas, they achieve higher gain and have greater spanning distances.

Omnidirectional. Omnidirectional antennas are used for connections where the interfacing antennas are located in opposing directions. Because the focus of an omnidirectional antenna is 360 degrees, it has less gain and spans a smaller distance than other types of antennas.

Antenna Alignment

Antenna Polarization. To improve the isolation between adjacent antenna installations, in addition to using different channels, you can change polarization. Consult your Solectek systems engineer for specific details.

Fresnel Zones. Waves can be deflected by objects in their paths. If a wave from an outer band of the cone (see Radio Signals) is deflected back through the center lobe, it can either strengthen that signal or reduce its strength, depending on how the waves

align when they collide. A glancing deflection changes the angle of the wave very little, so it remains generally in phase with the wave at the center lobe.

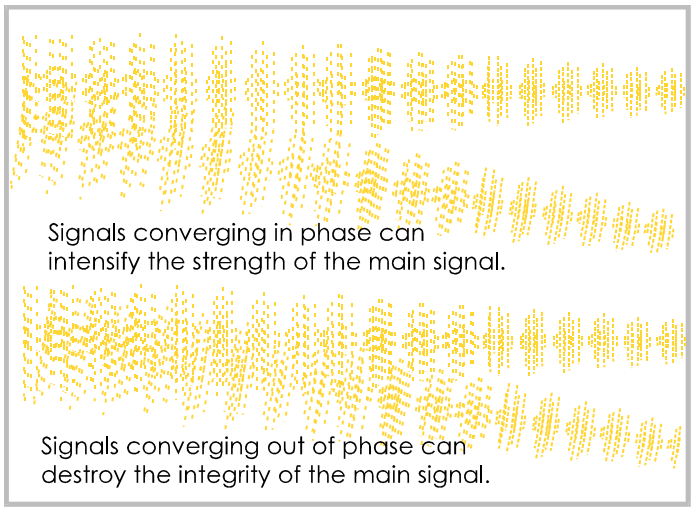

Within the signal span, there are zones where deflected signals are generally in phase with the center lobe signal, and there are other zones where deflected signals are generally out of phase with the center lobe signal. We refer to these zones as Fresnel (frËnl) zones.

The first Fresnel zone surrounds the center lobe where the RF signal is strongest. If more than 40% of the first Fresnel zone is obstructed, your RF line of sight is not sufficiently clear. In the first Fresnel zone and all the odd numbered Fresnel zones, deflected signals are generally in phase with or the center lobe signal.

In the second Fresnel zone, and all even-numbered Fresnel zones, deflected signals are up to 180× out of phase with the center lobe signal. Signals deflected from the second Fresnel zone can cause Inter Symbol Interference (ISI) which can result in great losses of the center lobe signal. To avoid this problem, you must place your antenna at a height that is out of range from F2 deflections. (An antenna can be set too high as well as too low.) Where deflection and diffraction from ground-based objects cause interference, even a small relocation of the antenna often produces a substantial improvement.

Line of Sight. Radio transmission requires a clear path between antennas known as radio line of sight. It is necessary to understand the requirements for radio line of sight when designing a network using Solectek equipment. Radio line of sight and visual

(optical) line of sight are different. Consult your Solectek dealer or Solectek's Web site at www.solectek.com for more information.

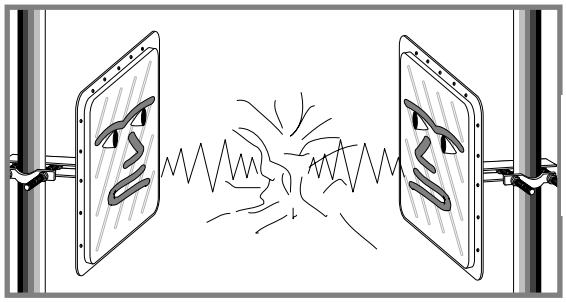

Signal collisions occur when two stations transmit at the same time.

If any one station is beyond the listening range of any other station, both of these stations might transmit simultaneously. The result is called a collision, and it generally results in lost data.

The CSMA/CA protocol was created to resolve this problem.

CSMA/CA. Some manufacturers use Carrier Sense Multiple Access with Collision Avoidance (CSMA/CA) protocol to avoid collisions in communications between substations on lightly loaded wireless systems. Solectek products do not use CSMA/CA, however, because this protocol suffers from severe limitations described in the following paragraphs.

To avoid collisions, a station wanting to transmit listens first for other stations. If the airway is busy, it tries again later. As more sites are added, throughput demands increase, and stations may repeatedly try to send data as other stations are transmitting. Under these circumstances CSMA/CA collision avoidance breaks down, and the following problems can occur:

Capture effect – Sites with strong signals overpower sites with weak signals and dominate the bandwidth used for transmission.

Collision Avoidance locks – Stations waiting for an open airway get stuck in Collision Avoidance mode.

"Hidden Node" Effect – All stations must have clear radio line of sight to all other stations to have direct communications. This is often impossible to achieve.

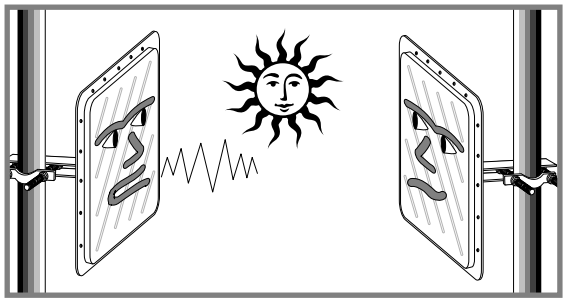

If strong stations overpower weaker stations, weaker stations may never get to broadcast.

Because of these limitations, CSMA/CA has problems supporting wireless inter-building applications that require continuous, high data throughput between multiple sites. Due to these CSMA/CA limitations, Solectek products DO NOT use CSMA/CA.

RF-DLC Base Station / Substation Polling Protocol. To overcome the CSMA/CA limitations mentioned above, Solectek has developed a base station / substation polling protocol called RF-DLC. The RF-DLC protocol allows for higher throughput under heavy load than systems using CSMA/CA or other similar protocols.

The base station allocates substation access to the internetwork. It polls each substation and allows a designated time for the substation to respond. This polling protocol has the following advantages:

- To avoid the capture effect where strong stations dominate, the base station partials out time to substations needing to broadcast.
- If a connection is lost, the disconnected station does not respond to polling. When a station times out without responding, the connection is recovered.
- Individual substations on the network do not need to listen to each other to avoid collisions. Since the base station manages all broadcasts, no two substations can transmit at the same time.

Protocols

IP. Internetwork Protocol (IP) is a routing protocol used to direct both outgoing and incoming messages based on an internetwork addresses.

Spanning Tree. Spanning Tree Protocol (STP) is a bridging protocol based on an IEEE 802.1 standard technique for ensuring efficient paths between bridged networks. Where multiple paths exist, the Spanning Tree algorithm calculates the best path to use. If that path deadends or gets mired in a loop, STP reconfigures the network to use another path.

Equipment

Console

A VT-100 terminal or workstation with VT-100 terminal emulation capability and terminal emulation software (such as Hyperterm).

Protocol Analyzer

A protocol analyzer or LAN analyzer is a device used to analyze LAN system activity. It receives all frames transmitted over the LAN, regardless of address, and provides a detailed analysis. This tool is useful for learning the quantity of traffic and the characteristics and protocols of the data being processed by a wireless bridge.

Spectrum Analyzer

A spectrum analyzer is a tunable instrument which graphically displays signals it detects within a selected band of the RF spectrum. The spectrum analyzer can be used for several purposes during site surveys or for problem diagnosis. For example, by detecting an existing signal in a broadcast band you want to use, the spectrum analyzer can alert you to a potential source of interference.

Topological Map

A topological map allows you to study the terrain between antenna sites that are out of view from one another. You can purchase inexpensive topological maps from the US Geographical Survey, Denver, Colorado 802225.

Site Survey

A site survey provides the studies and analysis needed to assure success in a wireless internetwork design. A site survey is particularly important for long distance and multipoint connections, and it is essential if there is any doubt whether a wireless internetwork is feasible or practical for the application.

Site surveys may include few or many studies, depending on the difficulty of the installation and the questions to be answered. Two survey study options include terrain analysis and spectrum analysis (see spectrum analyzer). The site survey may include any or all of the following information:

- The types of antennas and other components best suited to achieve the distance and multipoint spanning requirements
- How high the antennas must be to avoid obstructions and out-of-phase deflections
- Potential sources of interference in the alternative RF bands
- The best configuration (base/sub station or point-to-point)
- The best location for each component
- The federal, state, and local requirements that apply for mast construction and electrical grounding in your area.

Terrain Analysis

Terrain analysis charts the terrain between antennas in order to calculate the best location and height for the antennas. This calculation must consider several factors. For example:

- The height of the lower half of the first Fresnel zone between the antennas relative to the highest obstructions
- The distances spanned, the number of sites linked, and the types of antennas needed to reach all the sites
- The margins required to achieve your reliability objectives

The following chart shows 100% of the lower half of the first Fresnel zone for a link spanning nearly 13 miles with recommended antenna heights of 240 and 70 feet. Although a mountain is shown blocking part of the F1 signal path between the anten-

nas, it is not essential to maintain a free space path of 100%. Note that this chart does not show ground cover objects, such as trees or buildings.

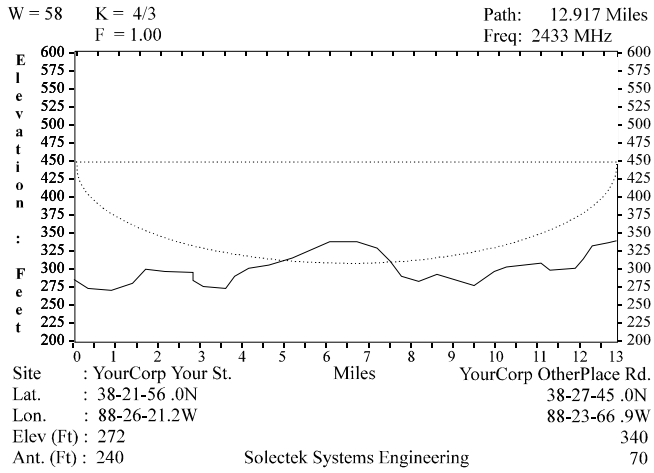

The next chart shows the same terrain with the same antenna heights, but it calculates based on the recommended minimum limit of 60% (.6) free-space in the lower half of the F1 zone. This graphically shows the minimum RF line of sight requirements for the antennas.

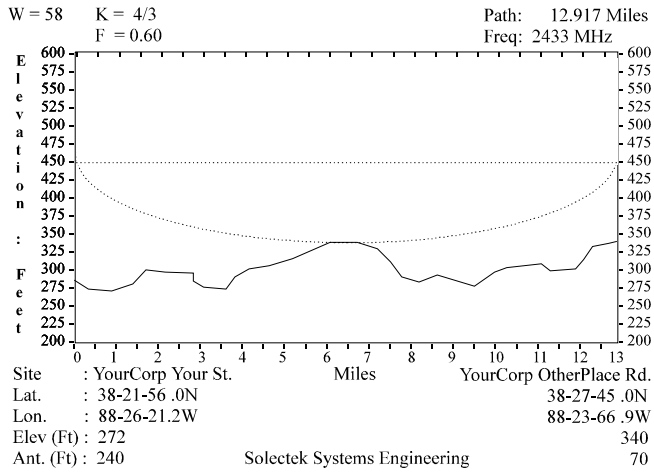

Appendix K: Skyway Antennas

A good wireless connection depends on the antenna you choose and mount.

This chapter contains information about the following antennas:

7002301: 6 dBi Omni Directional Antenna 214

7002401: 11 dBi Omni Directional Antenna 216

7002501: 16 dBi Outdoor Flat Panel Directional Antenna 218

7002601: 17 dBi Outdoor Flat Panel Directional Antenna 220

7002701: 22 dBi Outdoor High gain Flat Panel Directional Antenna..... 222

7002801: 8 dBi Indoor/Outdoor Patch Antenna..... 224

7002901: 12 dBi 110 ° Outdoor Sectorial Antenna..... 226

Warning: Systems that use fixed point-to-point (PTP) operations are excluded from the use of point-to-multipoint systems, omni-directional applications and multiple co-located intentional radiators transmitting the same information. You (the user and installer) bear the responsibility for ensuring that a point-to-point system is used exclusively for those PTP operations only (CFR 47 Part 15.247 b).

Notes:

- All omni antennas should be mounted above the SkyWay bridge/router, near the very top of the mast.
- Antennas are not shown to scale.
- Solectek's antennas are all weather units and we recommend that a professional installer perform the installation.
- All SkyWay Series antenna are supplied with a standard 8 ft coaxial pigtail (LMR400) to interface with the transceiver.

7002301: 6 dBi Omni Directional Antenna

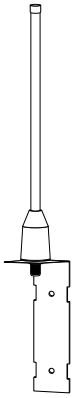

Specifications

Frequency	2.4000 to 2.4835 GHz
Net Gain	6.0 dBi
3dB Beam width (E. Plane)	20 °
Front to Back ratio	N/A – Omnidirectional
Polarity	Vertical, fixed
Cross polarity rejection	n/a
VSWR (Average)	1.5:1
Impedance	50 Ω
Coaxial pigtail length (to ODU)	
Rated wind velocity	125 mph (201 kph)
Wind loading @ rated wind velocity	3.76 lbs (1.71 kg)
Elevation adjustment	n/a
Size	10.5 in l x 5/8 in dia. (266.7 mm l x 15.88 mm dia)
Weight	0.375 lbs (.1701 kg)
Radome	UV stabilized fiberglass
Mounting hardware	Stainless steel clamp
Mast diameter	.75 in to 3.0 in (19.05 mm to 76.2 mm) OD pipe

Wall Mount

Note. Since the antenna must be mounted *above* the SkyWay, do not use the wall mount if the SkyWay is mounted on a mast.

1. Prepare the wall as necessary (e.g., measure and drill holes, set screw anchors).
2. Insert and tighten two screws through pre-drilled mounting holes.

Mast Mount

1. Attach the antenna to the mast with two hose clamps seated in grooves on the bracket.

7002401: 11 dBi Omni Directional Antenna

Specifications

Frequency	2.4000 to 2.4835 GHz
Net Gain	11.0 dBi
3dB Beam width (E. Plane)	12°
Front to Back ratio	N/A – Omnidirectional
Polarity	Vertical, fixed
Cross polarity rejection	n/a
VSWR (Average)	1.5:1
Impedance	50 Ω
Coaxial pigtail length (to ODU)	
Rated wind velocity	135 mph (217 kph)
Wind loading @ rated wind velocity	4.0 lbs (1.81 kg)
Elevation adjustment	n/a
Size	37 in l x .7 in dia. (939.8 mm l x 17.78 mm dia.)
Weight	0.88 lbs (0.4 kg)

Specifications (Continued)

Radome	UV stabilized fiberglass
Mounting hardware	Galvanized and stainless steel clamp
Mast diameter	.75 in to 2.0 in (19.05 mm to 50.8 mm OD pipe

Wall Mount

Note. Since the antenna must be mounted *above* the SkyWay, do not use the wall mount if the SkyWay is mounted on a mast.

1. Prepare the wall as necessary (e.g., measure and drill holes, set screw anchors).
2. Use two screws to attach the bracket to a backplate, then attach the back plate to the wall

Mast Mount

Use the bracket and U-bolt assembly to attach the cable to the mast.

7002501: 16 dBi Outdoor Flat Panel Directional Antenna

Note: This antenna is designed to be used as a bridge between two networks or for point-to-point communications in the ISM band (2.4 GHz) only.

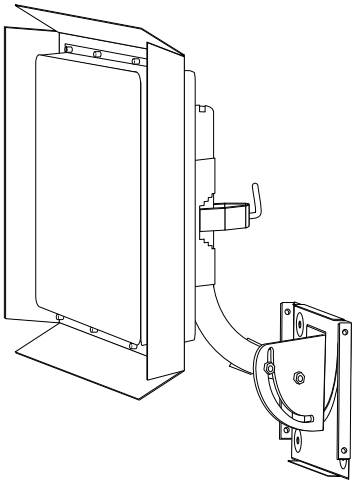

Specifications

Frequency	2.4000 to 2.4835 GHz
Net Gain	16.0 dBi
3dB Beam width (E. Plane)	
Front to Back ratio	
Polarity	Vertical (default) or horizontal; field changeable
Cross polarity rejection	
VSWR (Average)	1.5:1
Impedance	50 Ω
Coaxial pigtail length (to ODU)	
Rated wind velocity	
Wind loading @ rated wind velocity	
Elevation adjustment	
Size	
Weight	

Specifications (Continued)

Radome	
Reflector material	
Mounting hardware	
Mast diameter	.75 in to 3.0 in (19.05 mm to 76.2 mm) OD pipe

Wall Mount

Note. Since the antenna must be mounted *above* the SkyWay, do not use the wall mount if the SkyWay is mounted on a mast.

1. Prepare the wall as necessary (e.g., measure and drill holes, set screw anchors).
2. Use four screws to attach the provided wall mount to the wall.

Mast Mount

1. Attach it to the mast with a U-clamp.
2. Tighten the clamp with your fingers.

7002601: 17 dBi Outdoor Flat Panel Directional Antenna

Note: This antenna is designed to be used as a bridge between two networks or for point-to-point communications in the ISM band (2.4 GHz) only.

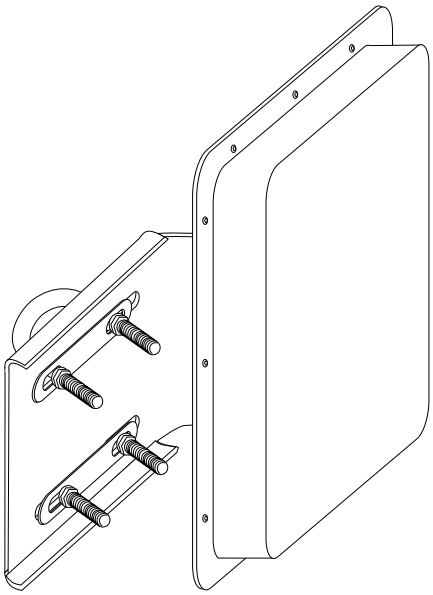

Specifications

Frequency	2.4000 to 2.4835 GHz
Net Gain	17.0 dBi
3dB Beam width (E. Plane)	
Front to Back ratio	
Polarity	Vertical (default) or horizontal; field changeable
Cross polarity rejection	
VSWR (Average)	1.5:1
Impedance	50 Ω
Coaxial pigtail length (to ODU)	
Rated wind velocity	
Wind loading @ rated wind velocity	
Elevation adjustment	

Specifications (Continued)

Size	
Weight	
Radome	
Reflector material	
Mounting hardware	
Mast diameter	.75 in to 3.0 in (19.05 mm to 76.2 mm) OD pipe

Wall Mount

Not available.

Mast Mount

Note: Use a 9/16 in wrench to tighten the bolts.

1. Use four bolts to attach the lower part of the bracket to the square antenna.
2. Adjust the tilt on the center section using the 2 bolts.
3. Use four bolts to anchor the bracket to the mast with two U-bolts.

7002701: 22 dBi Outdoor High gain Flat Panel Directional Antenna

Note: This antenna is designed to be used as a bridge between two networks or for point-to-point communications in the ISM band (2.4 GHz) only.

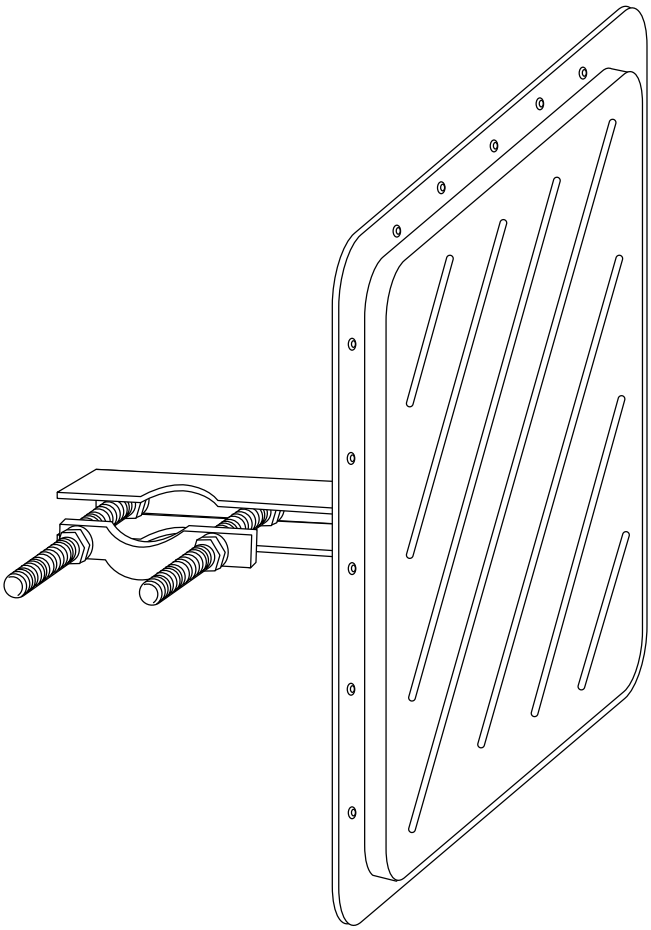

Specifications

Frequency	2.4000 to 2.4835 GHz
Net Gain	21.2 dBi
3dB Beam width (E. Plane)	10 °
Front to Back ratio	> 32 dB
Polarity	Vertical (default) or horizontal; field changeable
Cross polarity rejection	> 30 dB

Specifications (Continued)

VSWR (Average)	1.5:1
Impedance	50 Ω
Coaxial pigtail length (to ODU)	36 in (914.4 mm)
Rated wind velocity	100 mph/140 mph (161 kph/225 kph)
Wind loading @ rated velocity	30 lbs/140 lbs (13.61 kg/63.5 kg)
Elevation adjustment	45 °
Size	24.0 in x 24.0 in x 1.5 in (609.6 mm x 609.6 mm x 38.1 mm)
Weight	15 lbs (6.8 kg)
Radome	n/a
Reflector material	Aluminum/plastic
Mounting hardware	aluminum/steel clamp
Mast diameter	2.375 in (60.33 mm) OD pipe

Wall Mount

Not available.

Mast Mount

1. Attach the square part of the bracket to the square antenna with two bolts and washers.

Attach two bolts at the end of the boom to clamp the fixture to the mast.

7002801: 8 dBi Indoor/Outdoor Patch Antenna

Note: This antenna is designed to be used as a bridge between two networks or for point-to-point communications in the ISM band (2.4 GHz) only.

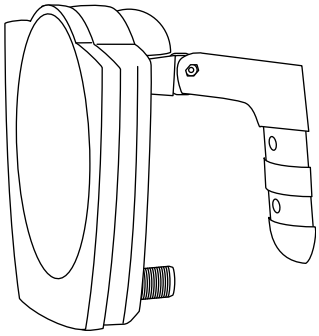

Specifications

Frequency	2.4000 to 2.4835 GHz
Net Gain	8.0 dBi
3dB horizontal beam width	60 °
3 dB vertical beam width	60 °
Front to Back ratio	25 dB
Polarity	Linear
Cross polarity rejection	n/a
VSWR (Average)	1.5:1
Impedance	50 Ω
Connector	N female
Rated wind velocity	125 mph (201 kph)
Wind loading @ rated wind velocity	20 lbs (9.072 kg)
Elevation adjustment	n/a
Size	4.77 in x 1.14 in x 6.25 in (121.2 mm x 29 mm x 158.8 mm)
Weight	1.5 lbs (.68 kg)
Radome	UV stabilized
Mounting hardware	screw mount base, snap-in radome

Wall Mount

Note. Since the antenna must be mounted *above* the SkyWay, do not use the wall mount if the SkyWay is mounted on a mast.

1. Prepare the wall as necessary (e.g., measure and drill holes, set screw anchors).
2. Insert and tighten two screws through pre-drilled mounting holes.

Mast Mount

1. Attach the antenna to the mast with two hose clamps seated in grooves on the bracket.
2. Tighten the clamps.
3.

7002901: 12 dBi 110 ° Outdoor Sectorial Antenna

Note: This antenna is designed to be used as a bridge between two networks or for point-to-point communications in the ISM band (2.4 GHz) only.

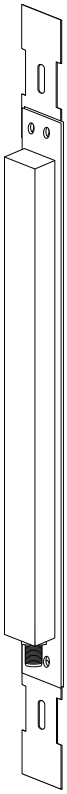

Specifications

Frequency	2.4000 to 2.4835 GHz
Net Gain	12.0 dBi
3dB Beam width (E. Plane)	12 °
Front to Back ratio	> 17 dB
Polarity	Vertical, fixed
Cross polarity rejection	n/a
VSWR (Average)	1.5:1
Impedance	50 Ω
Coaxial pigtail length (to ODU)	
Rated wind velocity	124 mph (200 kph)

Specifications (Continued)

Wind loading @ 140 mph	6.6 lbs (2.99 kg)
Elevation adjustment	n/a
Size	20 in x 2 in x 1.2 in (508 mm x 50.8 mm x 30.48 mm)
Weight	0.55 lbs (.25 kg)
Radome	ASA, UV stabilized
Reflector material	Powder-coated aluminum
Mounting hardware	stainless steel worm-type clamp
Mast diameter	.75 in to 3.0 in (19.05 mm to 76.2 mm) OD pipe

Wall Mount

Note. Since the antenna must be mounted *above* the SkyWay, do not use the wall mount if the SkyWay is mounted on a mast.

1. Prepare the wall as necessary (e.g., measure and drill holes, set screw anchors).
2. Attach the two mounting brackets to anchor the frame at top and bottom.
3. Insert and tighten two screws through pre-drilled mounting holes.

Mast Mount

1. Attach the two mounting brackets to anchor the frame at top and bottom.
2. Attach the antenna to the mast with two hose clamps seated in grooves on the brackets.
3. Tighten the clamps.

Index

Symbols

(db), decibel 201
(female dc jack), dc power cable 182
(psk), phase shift key 199

Numerics

10 base-t/100 base-tx (Ethernet cable
    RJ-45) 184
2.4 ghz frequency characteristics 199
7002301 6 dbi omni directional antenna 214
7002401 11 dbi omni directional antenna 216
7002501 16 dbi outdoor flat panel directional antenna 218
7002601 17 dbi outdoor flat panel directional antenna 220
7002701 22 dbi outdoor high gain flat panel directional antenna 222
7002801 8 dbi indoor/outdoor patch antenna 224
7002901 12 dbi 110 ° outdoor sectorial antenna 226

A

accept status of a sub station, validating 81
access levels, adding users and setting 62
accessing the SkyWay bridge/router 22
activity, checking icmp 161
adding
    users 62
adding users and setting access levels 62
address resolution protocol table, checking the 163
addresses, obtaining IP 69
addresses, setting up IP 69
administration console 11
administration console, connecting to the 51
adp discovery process 66
ADP substation configuration 81
adp, disabling 66
adp, enabling 65
alignment and RF link verification, antenna 55
alignment, antenna 204
amplitude 199
analysis, terrain 210
analyzer, protocol 209
analyzer, spectrum 209
antenna 204
    alignment 204
    polarization 204
antenna alignment 204
antenna alignment and RF link verification 55
antenna polarization 204
antenna types 204
    directional 204
    multidirectional 204
    omnidirectional 204
antenna, connecting an 49
antenna, grounding SkyWay and the 47
antenna, mounting the 46
antenna, selecting the 45
antenna, setting up the 45
antennas 204
application from reset, starting the BIOS 18
application from runtime, starting the BIOS 18
application, BIOS 18
application, point-to-point or multi-point 8
ARP table 163
as a base station, configuring the SkyWay 69
as a sub station, configuring the SkyWay 77
at commands, example 23
attached to the SkyWay, to configure a modem 22
attenuation 201
attenuation and gain 201
audience, intended 2
automatic discovery protocol 65
available, configuration features 58
available, monitoring features 126
available, SNMP features 103

B

bands, ISM 199
base port status, checking RF-DLC 140
base station / substation polling protocol, mst/sm 207
base station / substation polling protocol, RF-DLC 207
base station states 164
base station, configuring the SkyWay as a 69
base sub ports, configuring the 80
basic concepts 198
before installing 28
bench test 32
bench test results 174
bench test, minimum configuration settings and factory defaults for 32
bench test, performing the 33
BIOS application 18
BIOS application from reset, starting the 18
BIOS application from runtime, starting the 18
BIOS configuration menu 19
BIOS diagnostics 104
BIOS main menu 18
BIOS system configuration 20
bootp 98
bridge
    configuration 90

port configuration 92
port status 152
spanning tree status and 149
bridge and spanning tree status, checking 149
bridge port status, checking 152
bridge/router, accessing the SkyWay 22
bridged protocols 187
bridging 88
bridging screens 149
bridging table, transparent 156
bridging, enabling and disabling 88

C

cable (female dc jack), dc power 182
cable, copper 53
cable, fiberoptic 53
cables, routing connected 48
cabling, connecting 48
center lobe 198
changes that require cycling or resetting 16
changes, saving configuration 16
characteristics, 2.4 ghz frequency 199
checking bridge and spanning tree status 149
checking bridge port status 152
checking icmp activity 161
checking IP routing status 157
checking RF-DLC base port status 140
checking SNMP status and trap history 128
checking spanning tree port status 154
checking the address resolution protocol table 163
checking the error log 130
checking the Ethernet port status 134
checking the polling status 146
checking the RF port 137
checking the RF signal status 147
checking the serial port status 132
checking the status summary 168
checking the sub port status 143
client and server, the pc is the 117
client, SkyWay is the 117
client, SkyWay is the server and 117
client, the pc is the 117
clients and server, TFTP 117
command names, menu and 5
commands and responses, RF-DLC 67
commands, dot 14
commands, example at 23
common rows 15
component identification 11
concepts, basic 198
configuration
ADP substation 81
Ehternet transceiver 85
Ethernet port 83
general parameters 64
RF base port 74
RF base port sub 80
RF diagnostic port 73
RF sub port 78
serial port 24
serial transceiver 25
configuration changes, saving 16
configuration database service 21
configuration database, understanding the 16
configuration features available 58
configuration menu, BIOS 19
configuration parameters, setting system 59
configuration settings and factory defaults for bench test, minimum 32
configuration summary 100
configuration summary, obtaining a 99
configuration, BIOS system 20
configuration, network 174
configuration, RF network 174
configure a modem attached to the SkyWay, to 22
configure the terminal for dialing to the SkyWay, to 22
configuring IP 93
configuring SkyWay 58
configuring the base sub ports 80
configuring the Ethernet port 83
configuring the Ethernet transceiver 85
configuring the IP ports 95
configuring the ports 69
configuring the serial port and serial transceiver 23
configuring the SkyWay as a base station 69
configuring the SkyWay as a sub station 77
configuring the TFTP server on SkyWay 119
connected cables, routing 48
connecting an antenna 49
connecting cabling 48
connecting to power 50
connecting to the administration console 51
connecting to your LAN 53
connection types 203
connection, modem settings for dial-up 22
considerations, safety 29
considerations, site 30
console 209
console cable (serial rs-422
db9) 183
console, administration 11
console, connecting to the administration 51
contents of the SkyWay package 10
control message protocol, internet 102
control screens, port status and 132
control screens, system status and 127
control, general status and 127
conventions, warnings 5
copper cable 53

csma/ca 206, 207
cycling or resetting, changes that require 16

D

database service, configuration 21
database, understanding the configuration 16
date and time, setting the system 64
dbi 202
dbm 202
dc jack), dc power cable (female 182
dc power cable (female dc jack) 182
decibel 201
decibel (db) 201
defaults for bench test, minimum configuration settings and factory 32
definitions, file 118
descrIPtion of the problem, detailed 173
descrIPtion, general 8
detailed descrIPtion of the problem 173
detection and recovery, error 68
diagnostics 104
diagnostics port, RF 73
diagnostics, BIOS 104
diagnostics, runtime 104
dialing to the SkyWay, to configure the terminal for 22
dial-up connection, modem settings for 22
directional 204
directory, file 111
disabling adp 66
disabling bridging, enabling and 88
discovery process, adp 66
discovery protocol, automatic 65
display information, how screens 15
displaying a list of users 63
displaying one record., screens 15
dot commands 14
dsss 200

E

editing fields 15
eirp 202
electrical safety guidelines 29
enabling adp 65
enabling and disabling bridging 88
equIPment 209
error detection and recovery 68
error log, checking the 130
Ethernet
    port configuration 83
    port status 134
    transceiver configuration 85
    transceiver status 136
Ethernet port status, checking the 134
Ethernet port, configuring the 83
Ethernet port. 11
Ethernet transceiver, configuring the 85
example at commands 23

F

factory defaults for bench test, minimum configuration settings and 32
fading 202
features available, configuration 58
features available, monitoring 126
features available, SNMP 103
features, product 9
fiberoptic cable 53
field types 15
fields, editing 15
file definitions 118
file directory 111
file transfer protocol, trivial 116
file transfer utilities 112
files, sending and receiving 117
flowchart, symptom/action 172
frame types, RF-DLC 67
frequency 199
frequency characteristics, 2.4 ghz 199
fresnel zones 204

G

gain 201
gain, attenuation and 201
general descrIPtion 8
general parameters configuration 64
general safety guidelines 29
general status and control 127
    information 173
ghz frequency characteristics, 2.4 199
grounding SkyWay and the antenna 47
guide, using this 3
guidelines, electrical safety 29
guidelines, general safety 29

H

history, checking SNMP status and trap 128
how screens display information 15
how to proceed 6
hyperjumps 5

I

icmp activity, checking 161
ICMP status 161
identification, component 11
information, how screens display 15
installing, before 28

intended audience 2
interference 202
internet control message protocol 102
internetwork 203
IP 208
    address table 160
    port configuration 95
    protocol configuration 93
    protocol status 157
    static routes configuration 97
IP addresses, obtaining 69
IP addresses, setting up 69
IP ports, configuring the 95
IP routing 93
IP routing screens 157
IP routing status, checking 157
IP, configuring 93
ISM bands 199

J

jack), dc power cable (female dc 182

K

key (psk), phase shift 199
key, phase shift 199

L

LAN 203
    analyzer 209
LAN, connecting to your 53
levels, adding users and setting access 62
line of sight 205
link verification, antenna alignment and RF 55
list of users, displaying a 63
lobe, center 198
log, checking the error 130
logical network map 174

M

main menu, BIOS 18
management protocols 187
management security parameters, setting network 59
management system parameters, setting network 61
map, logical network 174
map, topological 209
mast mount 215, 217, 219, 221, 223, 225, 227
mast, mounting to a 42
measure, units of 201
measurement, signal 201
menu and command names 5
menu structure, understanding the 13
menu, BIOS configuration 19
menu, BIOS main 18
menus and screens, navigating through 13
message protocol, internet control 102
minimum configuration settings and factory defaults for bench test 32
modem attached to the SkyWay, to configure a 22
modem settings for dial-up connection 22
monitoring features available 126
mount, mast 215, 217, 219, 221, 223, 225, 227
mount, wall 215, 217, 219, 221, 223, 225, 227
mounting the antenna 46
mounting the SkyWay unit 42
mounting to a mast 42
mounting to a wall 44
mst/sm base station / substation polling protocol 207
multidirectional 204
multi-level password security 123
multIPoint 203
multi-point application, point-to-point or 8

N

names, menu and command 5
navigating through menus and screens 13
network configuration 174
network configuration, RF 174
network management
    security configuration 59
    system configuration 61
network management security parameters, setting 59
network management system parameters, setting 61
network map, logical 174
new software version, uploading a 115
notes 5

O

obtaining a configuration summary 99
obtaining IP addresses 69
omnidirectional 204
one record., screens displaying 15
operations, remote 8
or multi-point application, point-to-point 8
or resetting, changes that require cycling 16

P

package, contents of the SkyWay 10
parameters configuration, general 64
parameters, setting network management security 59
parameters, setting network management system 61
parameters, setting system configuration 59
password security, multi-level 123
pc is the client and server, the 117
pc is the client, the 117
pc is the server., the 117

performing the bench test 33
phase shift key 199
phase shift key (psk) 199
ping utility 108, 109
point-to-point 203
point-to-point or multi-point application 8
polarization, antenna 204
polling 67
polling protocol, mst/sm base station / substation 207
polling protocol, RF-DLC base station / substation 207
polling status, checking the 146
port and serial transceiver, configuring the serial 23
port configuration
    Ethernet 83
    RF base 74
    RF base sub 80
    RF diagnostic 73
    RF sub 78
    serial 24
port states 88
port status and control screens 132
port status, checking bridge 152
port status, checking RF-DLC base 140
port status, checking spanning tree 154
port status, checking the Ethernet 134
port status, checking the serial 132
port status, checking the sub 143
port status, serial 132
port, checking the RF 137
port, configuring the Ethernet 83
port, RF diagnostics 73
port., Ethernet 11
ports, configuring the 69
ports, configuring the base sub 80
ports, configuring the IP 95
power 11
power cable (female dc jack), dc 182
power, connecting to 50
pre-installation procedures 30
problem, detailed descrIPtion of the 173
procedures, pre-installation 30
proceed, how to 6
process, adp discovery 66
product features 9
protocol
    analyzer 209
    csma/ca 207
protocol analyzer 209
protocol table, checking the address resolution 163
protocol, automatic discovery 65
protocol, internet control message 102
protocol, mst/sm base station / substation polling 207
protocol, RF-DLC base station / substation polling 207
protocol, the RF-DLC 65
protocol, trivial file transfer 116
protocols 208
    csma/ca 206
    mst/sm 207
    routing 208
    spanning tree 208
protocols, bridged 187
protocols, management 187
protocols, routed 187

R

radio
    signals 198
radio signals 198
receiving files, sending and 117
record., screens displaying one 15
recovery, error detection and 68
remote operations 8
require cycling or resetting, changes that 16
reset, starting the BIOS application from 18
resetting the unit 16
resetting, changes that require cycling or 16
resolution protocol table, checking the address 163
responses, RF-DLC commands and 67
results, bench test 174
RF
    base
        port configuration 74
        sub port configuration 80
    base radio test 105
    diagnostic port configuration 73
    port status 137
    signal status 147
    sub
        port configuration 78
    sub radio test 107
    transceiver configuration 72
RF diagnostics port 73
RF link verification, antenna alignment and 55
RF network configuration 174
RF port, checking the 137
RF signal status, checking the 147
RF. 11
RF-DLC
    base port status 140
    sub poll status 146
    sub port status 143
RF-DLC base port status, checking 140
RF-DLC base station / substation polling protocol 207
RF-DLC commands and responses 67
RF-DLC frame types 67
RF-DLC protocol, the 65
RF-DLC screens 140
RF-DLC, understanding 65
routed protocols 187

routing connected cables 48
routing protocols
    IP 208
routing screens, IP 157
routing status, checking IP 157
routing, IP 93
routing, setting up static 97
rows, common 15
runtime diagnostics 104
runtime, starting the BIOS application from 18

S

safety considerations 29
safety guidelines, electrical 29
safety guidelines, general 29
saving configuration changes 16
screens display information, how 15
screens displaying one record. 15
screens, bridging 149
screens, IP routing 157
screens, navigating through menus and 13
screens, port status and control 132
screens, RF-DLC 140
screens, scrolling 15
screens, system status and control 127
scrolling screens 15
security 123
security parameters, setting network management 59
security, multi-level password 123
security, SNMP 123
selecting the antenna 45
sending and receiving files 117
serial port and serial transceiver, configuring the 23
serial port configuration 24
serial port status 132
serial port status, checking the 132
serial transceiver configuration 25
serial transceiver, configuring the serial port and 23
server and client, SkyWay is the 117
server on SkyWay, configuring the TFTP 119
server, SkyWay is the 117
server, TFTP clients and 117
server, the pc is the client and 117
server., the pc is the 117
service, configuration database 21
setting access levels, adding users and 62
setting network management security parameters 59
setting network management system parameters 61
setting system configuration parameters 59
setting the system date and time 64
setting up IP addresses 69
setting up static routing 97
setting up the antenna 45
settings and factory defaults for bench test, minimum configuration 32
settings for dial-up connection, modem 22
shift key (psk), phase 199
shift key, phase 199
shot, taking a system snap 127
sight, line of 205
signal
    measurement 201
    strength 201
signal measurement 201
signal status, checking the RF 147
signals, radio 198
site considerations 30
site survey 210
SkyWay and the antenna, grounding 47
SkyWay as a base station, configuring the 69
SkyWay as a sub station, configuring the 77
SkyWay bridge/router, accessing the 22
SkyWay is the client 117
SkyWay is the server 117
SkyWay is the server and client 117
SkyWay package, contents of the 10
SkyWay unit, mounting the 42
SkyWay, configuring 58
SkyWay, configuring the TFTP server on 119
SkyWay, to configure a modem attached to the 22
SkyWay, to configure the terminal for dialing to the 22
snap shot, taking a system 127
SNMP 103
    status 128
    trap history 129
SNMP features available 103
SNMP security 123
SNMP status and trap history, checking 128
software version, uploading a new 115
spanning tree 89, 208
    port status 154
spanning tree port status, checking 154
spanning tree status, checking bridge and 149
spectrum analyzer 209
spectrum, spread 199, 200
spread spectrum 199, 200
starting the BIOS application from reset 18
starting the BIOS application from runtime 18
states, base station 164
states, port 88
states, sub station 166
static routing, setting up 97
station / substation polling protocol, mst/sm base 207
station / substation polling protocol, RF-DLC base 207
station states, base 164
station states, sub 166
station, configuring the SkyWay as a base 69
station, configuring the SkyWay as a sub 77
station, validating accept status of a sub 81

status and control screens, port 132
status and control screens, system 127
status and control, general 127
status and trap history, checking SNMP 128
status of a sub station, validating accept 81
status summary 168
status summary, checking the 168
status, checking bridge and spanning tree 149
status, checking bridge port 152
status, checking IP routing 157
status, checking RF-DLC base port 140
status, checking spanning tree port 154
status, checking the Ethernet port 134
status, checking the polling 146
status, checking the RF signal 147
status, checking the serial port 132
status, checking the sub port 143
status, ICMP 161
status, serial port 132
status, TFTP 119
structure, understanding the menu 13
sub port status, checking the 143
sub ports, configuring the base 80
sub station states 166
sub station, configuring the SkyWay as a 77
sub station, validating accept status of a 81
substation configuration, ADP 81
substation polling protocol, mst/sm base station / 207
substation polling protocol, RF-DLC base station / 207
summary, checking the status 168
summary, configuration 100
summary, obtaining a configuration 99
summary, status 168
support 8
survey, site 210
symptom/action flowchart 172
system configuration parameters, setting 59
system configuration, BIOS 20
system date and time, setting the 64
system parameters, setting network management 61
system snap shot, taking a 127
system status and control screens 127

T

table, ARP 163
table, checking the address resolution protocol 163
table, transparent bridging 156
taking a system snap shot 127
terminal for dialing to the SkyWay, to configure the 22
terrain analysis 210
test results, bench 174
test, bench 32
test, minimum configuration settings and factory defaults for bench 32
test, performing the bench 33
text, typed 5
TFTP
    file transfer 121
    server configuration 119
TFTP clients and server 117
TFTP server on SkyWay, configuring the 119
TFTP status 119
the pc is the client 117
the pc is the client and server 117
the pc is the server. 117
the RF-DLC protocol 65
through menus and screens, navigating 13
time, setting the system date and 64
to capture a screen
    173
to configure a modem attached to the SkyWay 22
to configure the terminal for dialing to the SkyWay 22
to connect an Ethernet cable
    53
to connect an RF cable
    49
to connect directly to a administration console
    52
to connect SkyWay to power
    50
to connect to a dedicated modem and data line
    52
to cycle the port
    16
to mount the SkyWay to a mast
    42
to reset the unit
    17
topological map 209
transceiver configuration
    Ethernet 85
    serial 25
transceiver, configuring the Ethernet 85
transceiver, configuring the serial port and serial 23
transfer protocol, trivial file 116
transfer utilities, file 112
transparent bridging table 156
trap history, checking SNMP status and 128
tree port status, checking spanning 154
tree status, checking bridge and spanning 149
tree, spanning 89, 208
trivial file transfer protocol 116
typed text 5
types, antenna 204
types, connection 203
types, field 15
types, RF-DLC frame 67

U

understanding RF-DLC 65
understanding the configuration database 16
understanding the menu structure 13
unit, mounting the SkyWay 42
unit, resetting the 16
units of measure 201
up IP addresses, setting 69
up static routing, setting 97
up the antenna, setting 45
uploading a new software version 115
users 63
users and setting access levels, adding 62
users, displaying a list of 63
using this guide 3
utilities, file transfer 112
utility, ping 108, 109

V

validating accept status of a sub station 81
verification, antenna alignment and RF link 55
version, uploading a new software 115

W

wall mount 215, 217, 219, 221, 223, 225, 227
wall, mounting to a 44
WAN 203
warnings 5

X

Xmodem 112

Y

Ymodem 113, 114
your LAN, connecting to 53

Z

zones, fresnel 204