Pit Lid Antenna Radiation Patterns and Assembly (Used with Model 520R and 520F)

March 26, 2006

Sensus Metering Systems

Copyright © 2004 Sensus® Metering Systems— Unpublished Work. All rights reserved. This Detailed System Design, and any Amendments any time thereto, and the information, methodologies, statements and techniques contained herein are the exclusive proprietary and confidential information of Sensus Metering Systems. All rights reserved. Any applicable third-party products mentioned herein are trademarks or registered trademarks of their respective companies.

Figure 1 Antenna Assembly, Exploded

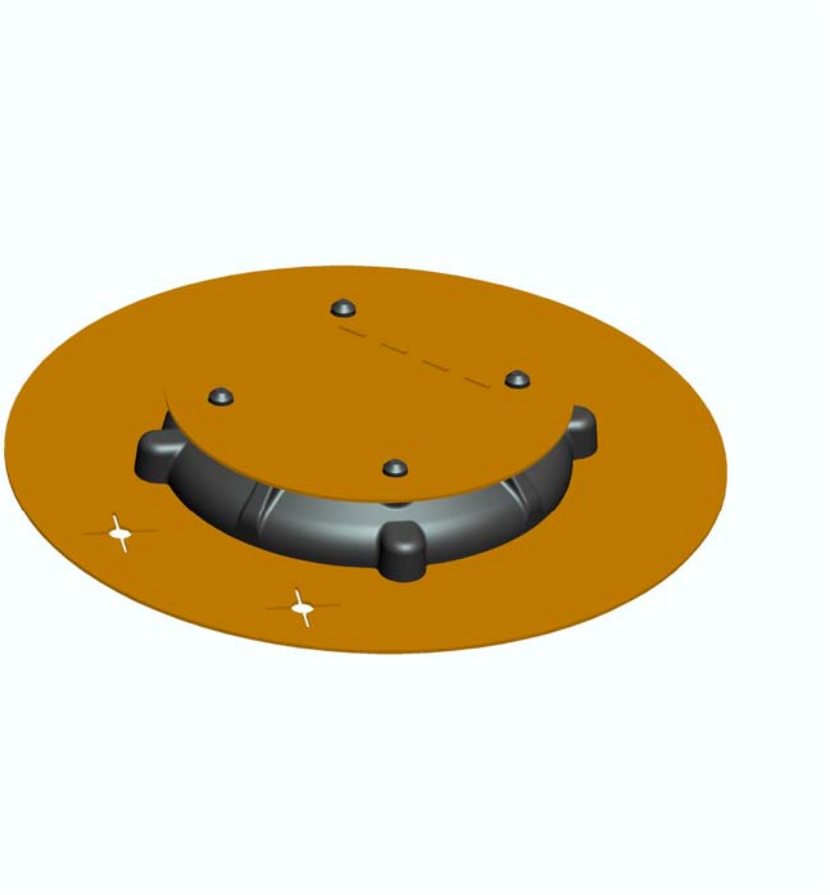

Figure 2 Antenna Assembly

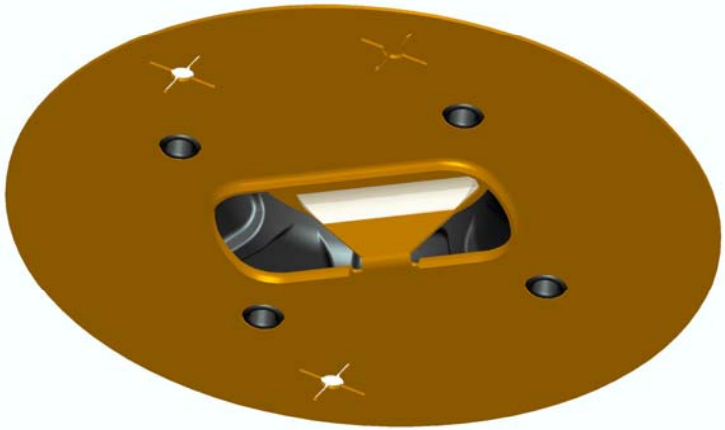

Figure 3 Antenna Assembly, Bottom View Showing Alignment Bosses, Retaining Clips, and Solder Connection

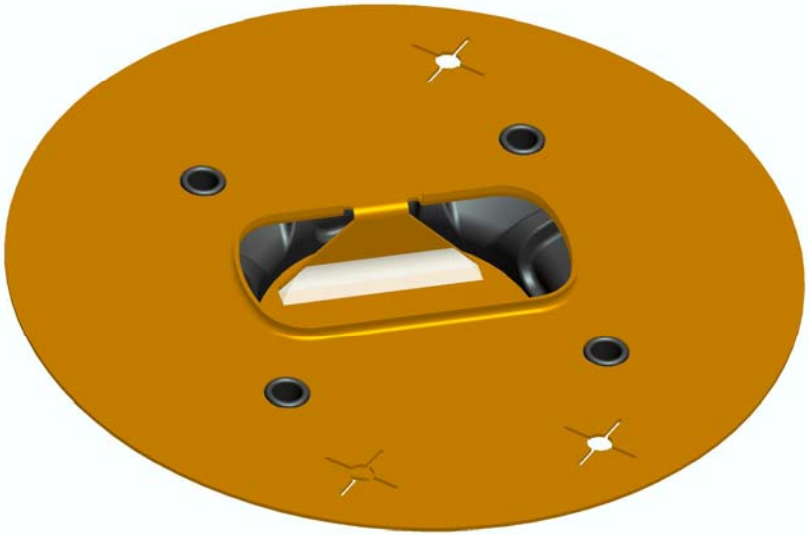

Figure 4 Antenna Assembly, Rotated Bottom View Showing Alignment Bosses, Retaining Clips, and Solder Connection

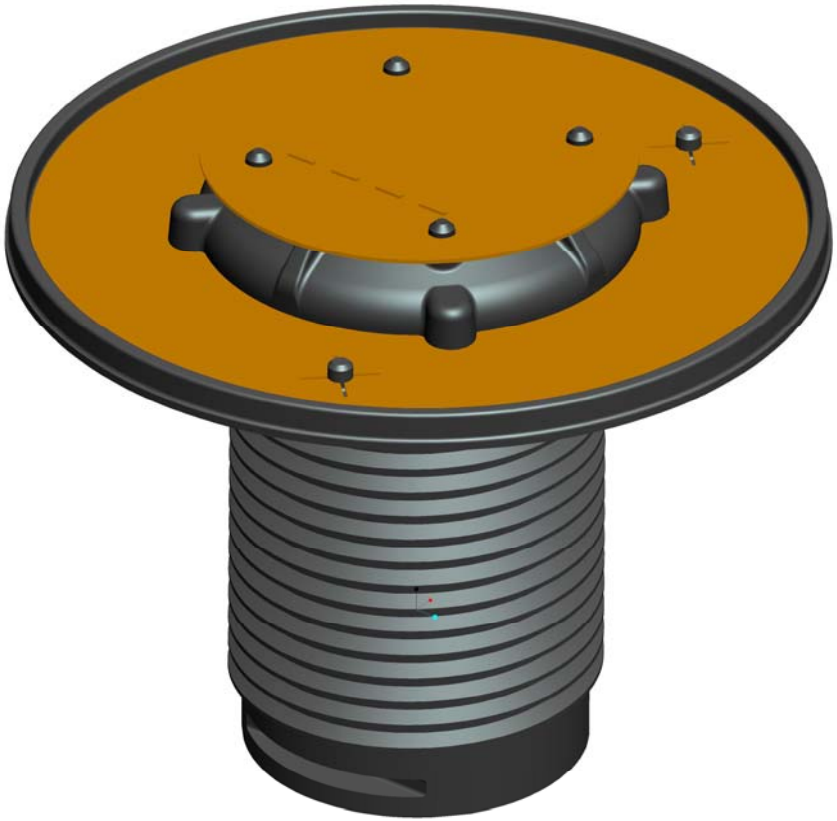

Figure 5 Antenna Lower Housing Assembly with Antenna Assembly Fastened

Figure 6 Antenna Housing Assembly

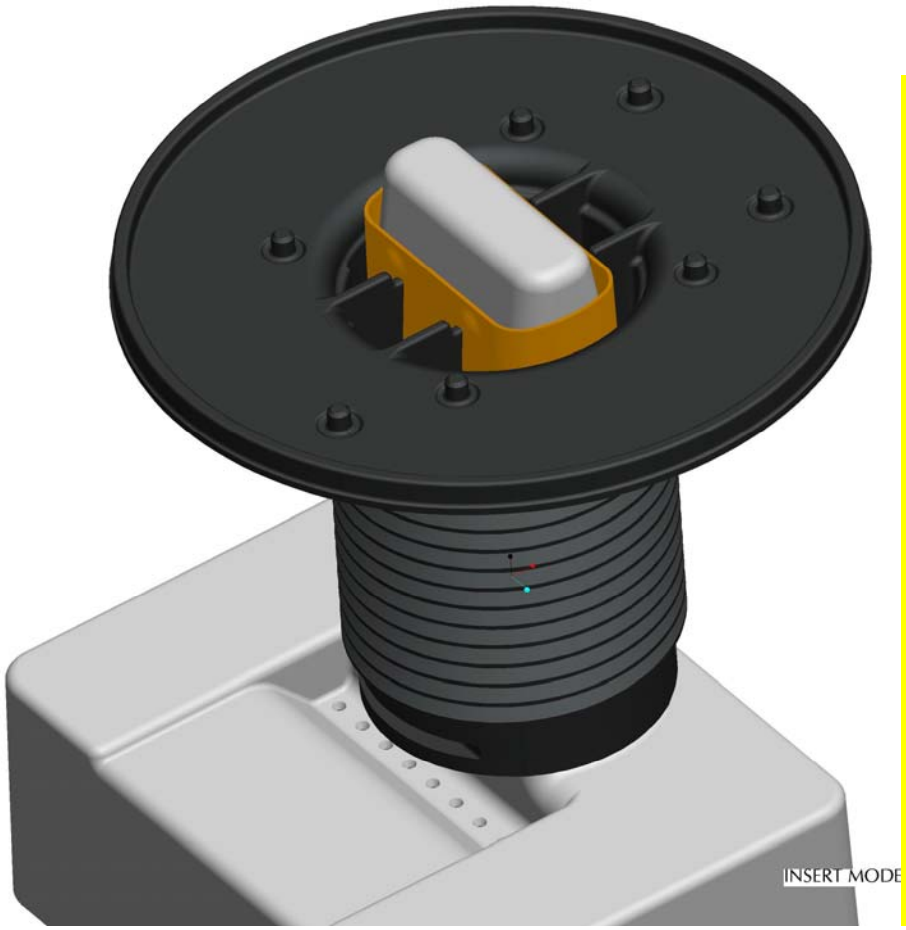

Figure 7 Antenna Lower Housing
Positioned on Transmitter Assembly

Figure 8 Mechanical Connection
Between the Antenna Ground Plane and
Transmitter Isolation Sleeve

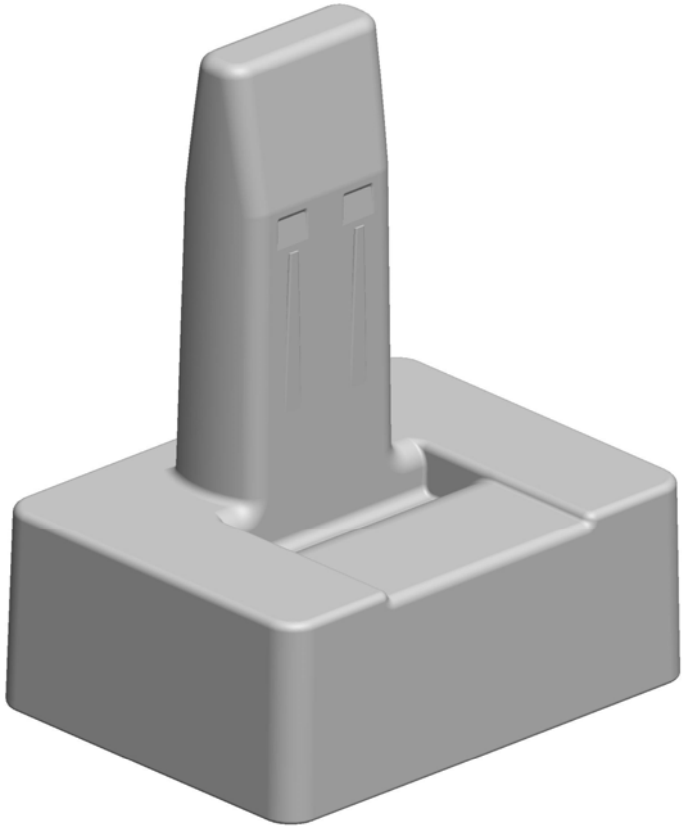

Figure 9 Proposed HDPE Modification for Controlling the Position of the Transmitter Isolation Sleeve

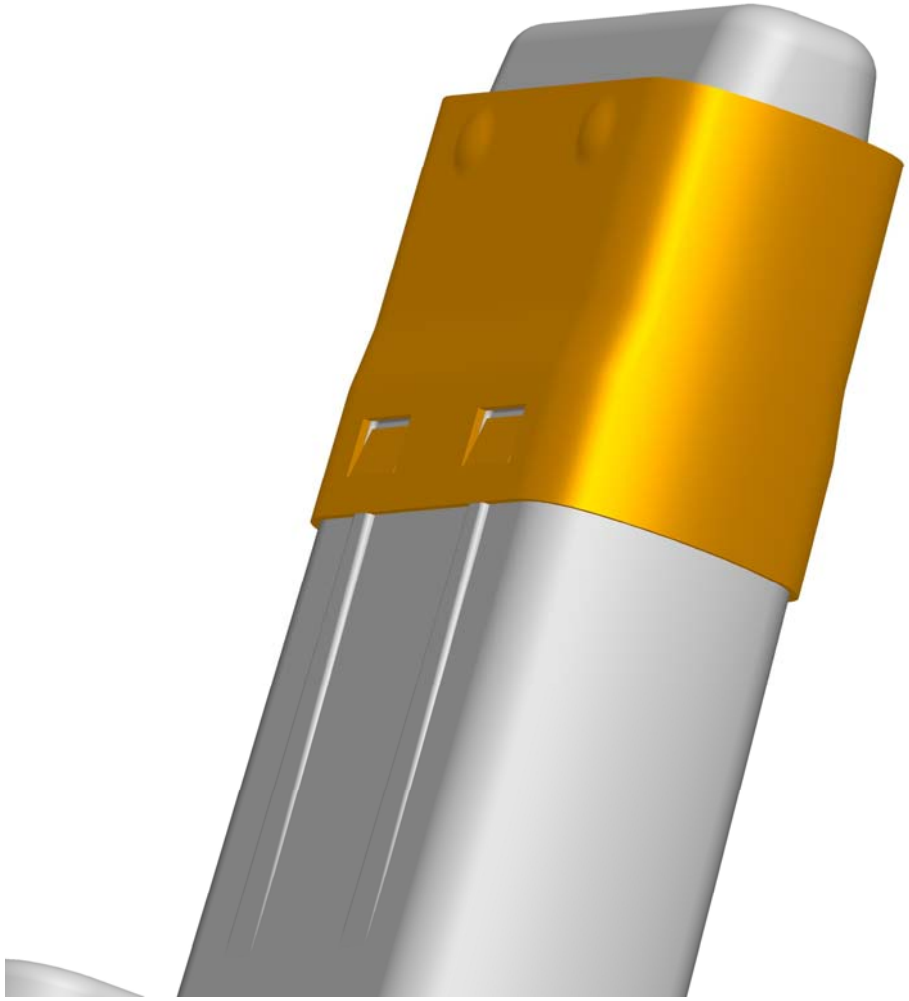

Figure 10 Transmitter Isolation Sleeve Positioned on HDPE with Proposed Modifications

Figure 11 Antenna Housing Assembly
with EMABOND Ring

Figure 12 Antenna Housing Assembly
Rotated with EMABOND Ring

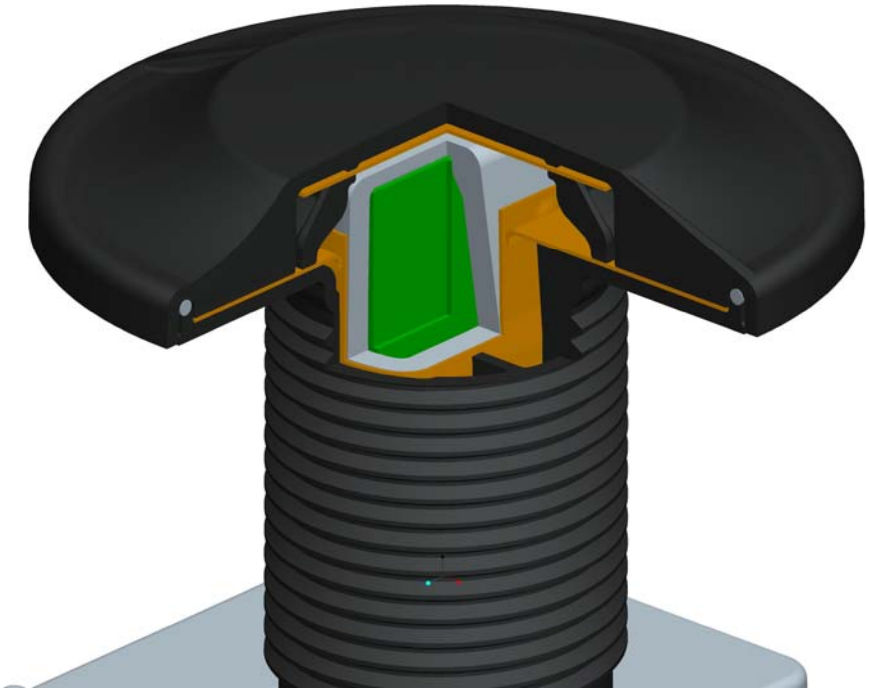

Figure 13 Antenna Housing Assembly
Section View

Figure 14 Antenna Housing Assembly
Mounted to Transmitter Housing
Assembly

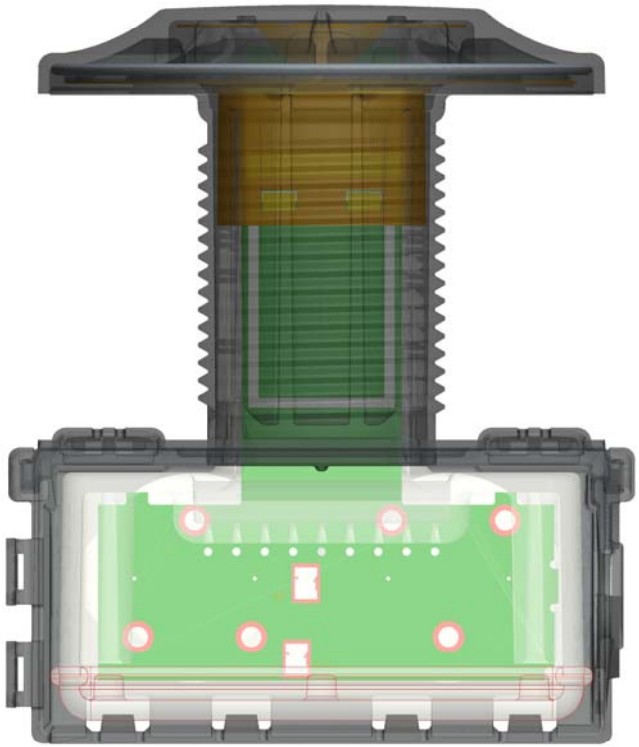

Figure 15 Antenna Housing Assembly
Semi-Transparent, Front

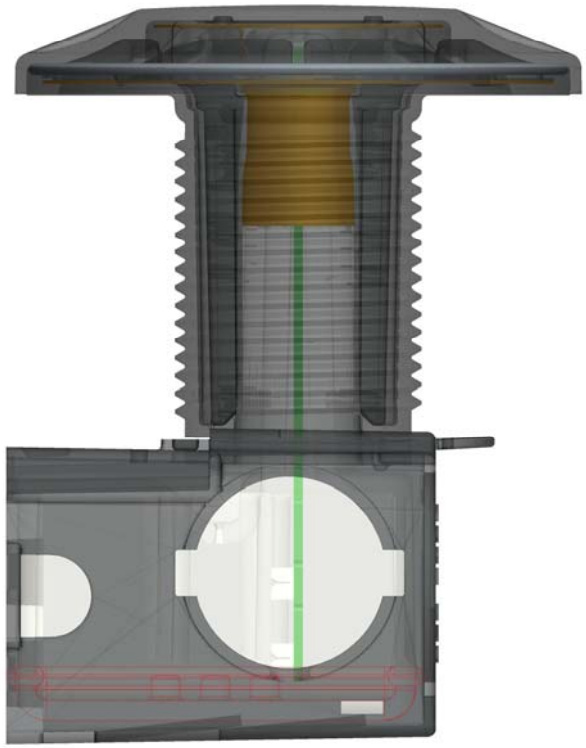

Figure 16 Antenna Housing Assembly
Semi-Transparent, Side

Repeatability Data

Circular Antenna, 3.6 in brass ground plane, 2.04 inch upper plate, nickle plate
SLA Sleeve with 80/1000 in. copper tape added to bottom and 4 solder bumps around to

Metal pit with Metal lid
The Circular Antenna was placed into the sealed pit in the anechoic @ 3 meters from the calibrated dipole.
An RF generator provides a +10 dBm sine wave to the antenna
Peak envelop power out was captured at 15 degree intervals using an Agilent Model 4402 spectrum analyzer.
The angle of elevation of the dipole was 10 degrees.

Tx power	10dBm
Date	15-Jun-05
Frequency	915MHz
Distance	3.00m
Cable loss	3.12dB
Path loss	41.21dB
RX antenna gain	2.00dB
System loss	-42.33dB
Zo	50.0ohm

Distance between plates = 0.38 inch
3.6 inch ground plane
2.04 inch top plate
Modified 1.0 inch nickle plated SLA sleeve around HDPE
80/1000 inch above top of ground plane.
0.07 inch ground plane extender
The band flares out and makes contact with the rectangular ground plane extender.
At 0 degrees, shorting bar in back

	Metal Lid, Metal Pit, Antenna #1		Metal Lid, Metal Pit, Antenna #2		Metal Lid, Metal Pit, Antenna #3		Metal Lid, Metal Pit, Antenna #4	
Angle	SA reading	Gain	SA reading	Gain	SA reading	Gain	SA reading	Gain
0deg	-34.8dBm	-0.5dBi	-35.7dBm	-1.4dBi	-34.9dBm	-0.6dBi	-34.6dBm	-0.3dBi
15deg	-34.8dBm	-0.5dBi	-35.6dBm	-1.3dBi	-34.7dBm	-0.4dBi	-34.4dBm	-0.1dBi
30deg	-34.2dBm	0.1dBi	-34.9dBm	-0.6dBi	-34.5dBm	-0.2dBi	-34.0dBm	0.3dBi
45deg	-34.1dBm	0.2dBi	-34.8dBm	-0.5dBi	-34.4dBm	-0.1dBi	-34.0dBm	0.3dBi
60deg	-34.3dBm	0.0dBi	-35.1dBm	-0.8dBi	-34.8dBm	-0.5dBi	-34.3dBm	0.0dBi
75deg	-34.3dBm	0.0dBi	-35.1dBm	-0.8dBi	-34.7dBm	-0.4dBi	-34.2dBm	0.1dBi
90deg	-34.1dBm	0.2dBi	-34.7dBm	-0.4dBi	-34.5dBm	-0.2dBi	-34.0dBm	0.3dBi
105deg	-34.0dBm	0.3dBi	-34.4dBm	-0.1dBi	-34.4dBm	-0.1dBi	-33.8dBm	0.5dBi
120deg	-33.7dBm	0.6dBi	-34.2dBm	0.1dBi	-34.0dBm	0.3dBi	-33.3dBm	1.0dBi
135deg	-33.7dBm	0.6dBi	-34.4dBm	-0.1dBi	-33.9dBm	0.4dBi	-33.3dBm	1.0dBi
150deg	-33.8dBm	0.5dBi	-34.6dBm	-0.3dBi	-34.4dBm	-0.1dBi	-33.7dBm	0.6dBi
165deg	-33.7dBm	0.6dBi	-34.7dBm	-0.4dBi	-34.6dBm	-0.3dBi	-33.8dBm	0.5dBi
180deg	-33.7dBm	0.6dBi	-34.5dBm	-0.2dBi	-34.2dBm	0.1dBi	-33.6dBm	0.7dBi
195deg	-34.5dBm	-0.2dBi	-34.5dBm	-0.2dBi	-34.2dBm	0.1dBi	-33.5dBm	0.8dBi
210deg	-34.5dBm	-0.2dBi	-34.3dBm	0.0dBi	-34.1dBm	0.2dBi	-33.4dBm	0.9dBi
225deg	-34.4dBm	-0.1dBi	-34.4dBm	-0.1dBi	-34.1dBm	0.2dBi	-33.4dBm	0.9dBi
240deg	-34.5dBm	-0.2dBi	-34.6dBm	-0.3dBi	-34.2dBm	0.1dBi	-33.6dBm	0.7dBi
255deg	-34.8dBm	-0.5dBi	-34.7dBm	-0.4dBi	-34.1dBm	0.2dBi	-33.9dBm	0.4dBi
270deg	-35.3dBm	-1.0dBi	-35.0dBm	-0.7dBi	-34.6dBm	-0.3dBi	-34.1dBm	0.2dBi
285deg	-35.9dBm	-1.6dBi	-35.3dBm	-1.0dBi	-35.2dBm	-0.9dBi	-34.4dBm	-0.1dBi
300deg	-36.0dBm	-1.7dBi	-35.5dBm	-1.2dBi	-35.5dBm	-1.2dBi	-34.4dBm	-0.1dBi
315deg	-35.7dBm	-1.4dBi	-35.2dBm	-0.9dBi	-35.2dBm	-0.9dBi	-34.2dBm	0.1dBi
330deg	-35.7dBm	-1.4dBi	-35.4dBm	-1.1dBi	-35.3dBm	-1.0dBi	-34.2dBm	0.1dBi
345deg	-35.6dBm	-1.3dBi	-35.5dBm	-1.2dBi	-35.2dBm	-0.9dBi	-34.4dBm	-0.1dBi
	Average	-0.25dBi	Average	-0.55dBi	Average	-0.24dBi	Average	0.40dBi
	Peak	0.63dBi	Peak	0.13dBi	Peak	0.43dBi	Peak	1.03dBi

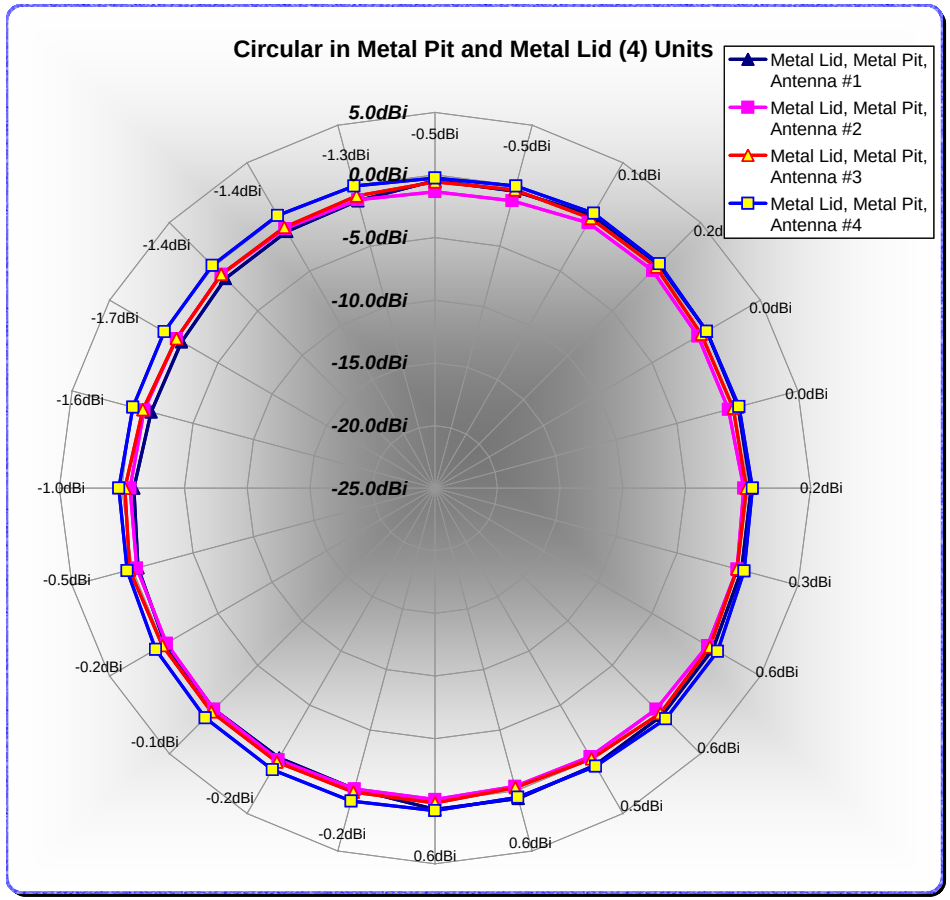

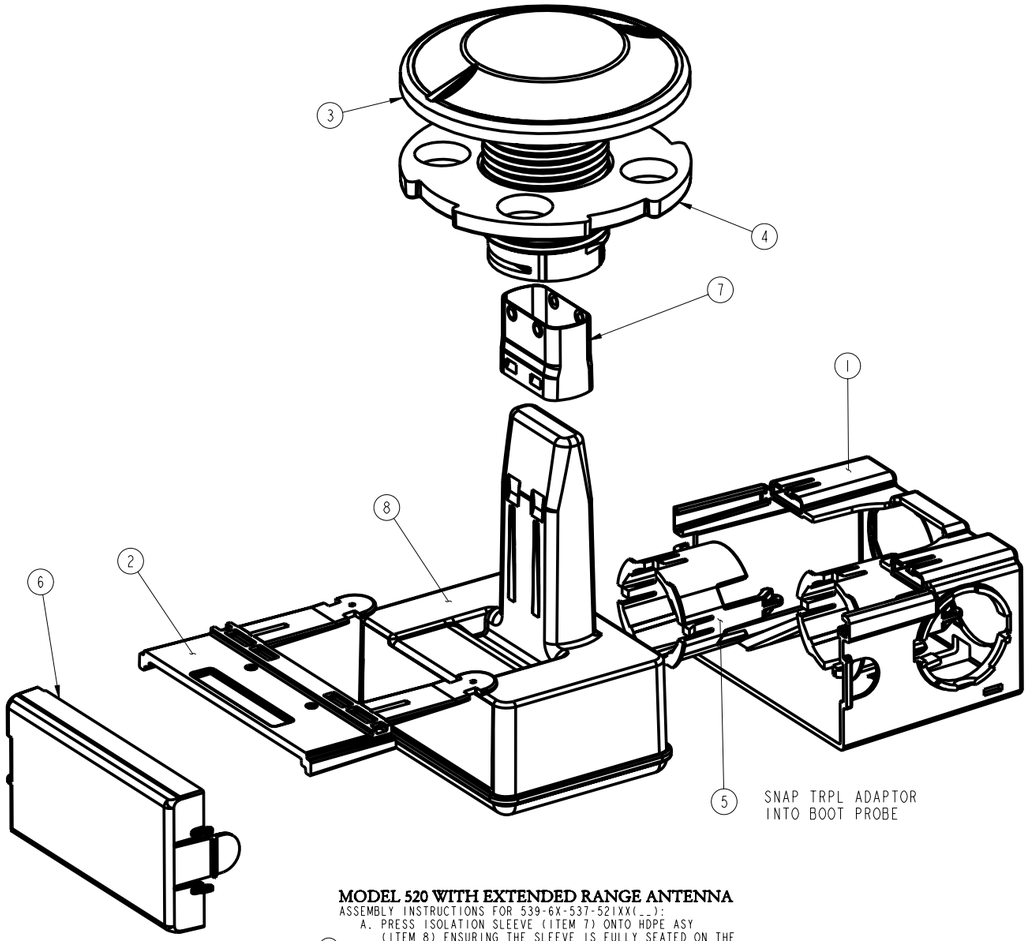

MODEL 520 WITH EXTENDED RANGE ANTENNA

ASSEMBLY INSTRUCTIONS FOR 539-6X-537-521XX(__):

A. PRESS ISOLATION SLEEVE (ITEM 7) ONTO HDPE ASY (ITEM 8) ENSURING THE SLEEVE IS FULLY SEATED ON THE RIBS LOCATED ON ITEM 8 (REF..200" DIMENSION) (TOOLING IS REQUIRED) (07)

B. SNAP BOOT CLIP (ITEM 2) TO FIRST SNAP POSITION

C. DROP NUT (ITEM 4) AND EXTENDED RANGE ANTENNA ASY (ITEM 3) ONTO HDPE ASY (ITEM 8)

D. BOOT CLIP (ITEM 2) TO BE FULLY ENGAGED INTO SLOTS OF HOUSING (ITEM 3) (SLOTS LOCATED AT END OF THREADED STEM)

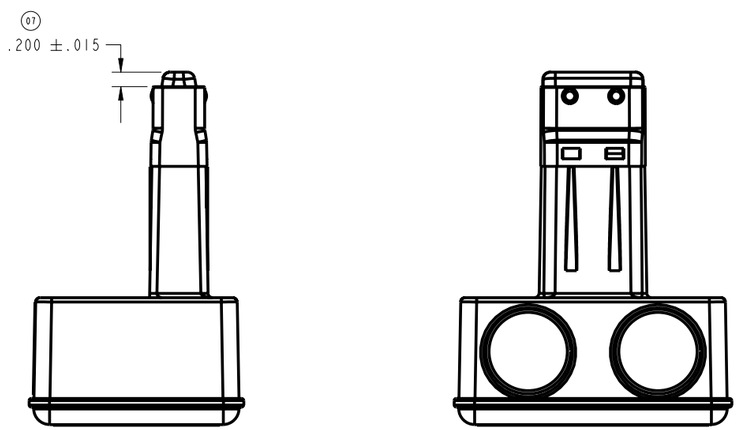

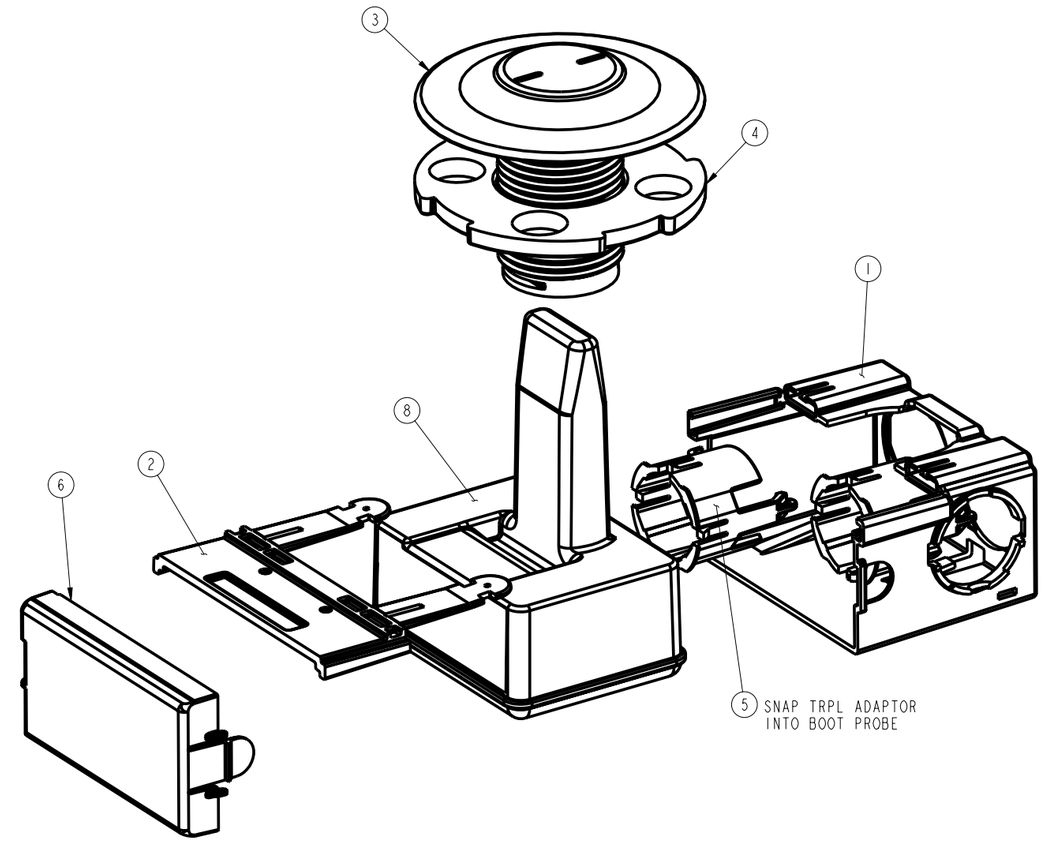

STANDARD MODEL 520

ASSEMBLY INSTRUCTIONS FOR 539-6X-537-520XX(__):

A. SNAP BOOT CLIP (ITEM 2) TO FIRST SNAP POSITION

B. DROP NUT (ITEM 4) AND PIT HOUSING (ITEM 3) ONTO HDPE ASY (ITEM 8)

C. BOOT CLIP (ITEM 2) TO BE FULLY ENGAGED INTO SLOTS OF HOUSING (ITEM 3) (SLOTS LOCATED AT END OF THREADED STEM)

GENERAL TOLERANCE X .005 IN ANGULAR TOLERANCE X .5° DEBURR ALL BURRS MACHINE FINISH UNLESS OTHERWISE SPECIFIED	ASY MATERIAL	539-6X-537-52XXX PART NUMBER

AT	CHANGE NOTICE NO.	DATE
00	1634-F	10/19/04
01	1634-M	04/21/05
02	1634-P	05/31/05
03	1670	08/03/05
04	1670-B	09/23/05
05	1670-E	11/16/05
06	1667-B	12/14/05
07	1667-C	12/15/05
PROD RELEASE		

SENSUS METERING SYSTEMS

MODEL 520
ASSEMBLY COMPLETE
3D PART FILE: U89817

SCALE: 1.000	DATE	SHEET 1 OF 4	
DR. BY MJZ	05-OCT-04		U-89817-D
CH. BY MSW	01/10/06		
AP. BY JV	01/10/06		