RF EXPOSURE EVALUATION

SPECIFIC ABSORPTION RATE

SAR TEST REPORT

FOR THE

LXE, INC.

MODEL: MX7

WIRELESS HANDHELD COMPUTER / SCANNER
WITH
INTERNAL
802.11b/g WLAN

FCC ID: KDZLXEMX7P1

IC: 1995A-MX7P

Test Report Serial Number

101805KDZ-T683-S15W
Revision 0

Test Report Issue Date

October 26, 2005

Celltech Compliance Testing & Engineering Lab
(Celltech Labs Inc.)
1955 Moss Court
Kelowna, BC
Canada
V1Y 9L3

Test Report Prepared By:	Test Report Approved By:
Cheri Frangiadakis	
Cheri Frangiadakis Test Report Writer Celltech Labs Inc.	Jonathan Hughes General Manager Celltech Labs Inc.

DECLARATION OF COMPLIANCE
SAR RF EXPOSURE EVALUATION

Test Lab

CELLTECH LABS INC.
Testing and Engineering Services
1955 Moss Court
Kelowna, B.C.
Canada V1Y 9L3
Phone: 250 - 448-7047
Fax: 250 - 448-7046
e-mail: info@celltechlabs.com
web site: www.celltechlabs.com

Applicant Information

LXE, INC.
125 Technology Parkway
Norcross, GA 30092
United States

FCC IDENTIFIER:	**KDZLXEMX7P1**
IC IDENTIFIER:	**1995A-MX7P**
Model(s):	**MX7**
Rule Part(s):	**FCC §2.1093; IC RSS-102 Issue 1 (Provisional)**
Test Procedure(s):	**FCC OET Bulletin 65 Supplement C (01-01)**
Device Classification:	**Digital Transmission System (DTS)**
Device Description:	**Wireless Handheld Computer/Scanner**
Internal Transmitter(s):	**802.11b/g WLAN**
Mode(s) of Operation:	**Direct Sequence Spread Spectrum (DSSS)**
Tx Frequency Range(s):	**2412 - 2462 MHz**
Max. RF Conducted Power Measured:	**18.67 dBm (73.6 mW) 802.11b, 1 Mbps (2412 MHz)**
Battery Type(s) Tested:	**Lithium-ion 7.2 V, 2200 mAh (P/N: 159904-0001)**
Antenna Type(s) Tested:	**Internal Omni-Directional (P/N: 159793-0001)**
Body-Worn Accessories Tested:	**Nylon Holster with Belt-Loop (P/N: 159890-0001)**
Max. SAR Level(s) Measured:	**Body-worn: 0.118 W/kg (1g average)**

Celltech Labs Inc. declares under its sole responsibility that this wireless portable device has demonstrated compliance with the Specific Absorption Rate (SAR) RF exposure requirements specified in FCC 47 CFR §2.1093 and Health Canada's Safety Code 6. The device was tested in accordance with the measurement standards and procedures specified in FCC OET Bulletin 65, Supplement C (Edition 01-01) and Industry Canada RSS-102 Issue 1 (Provisional) for the General Population / Uncontrolled Exposure environment. All measurements were performed in accordance with the SAR system manufacturer recommendations.

I attest to the accuracy of data. All measurements were performed by me or were made under my supervision and are correct to the best of my knowledge and belief. I assume full responsibility for the completeness of these measurements and vouch for the qualifications of all persons taking them.

This test report shall not be reproduced partially, or in full, without the prior written approval of Celltech Labs Inc. The results and statements contained in this report pertain only to the device(s) evaluated.

Tested By:	**Reviewed By:**
Sean Johnston **Compliance Technologist** **Celltech Labs Inc.**	**Spencer Watson** **Senior Compliance Technologist** **Celltech Labs Inc.**

TABLE OF CONTENTS

1.0 INTRODUCTION ____ 4
2.0 DESCRIPTION of DEVICE UNDER TEST (DUT) ____ 4
3.0 SAR MEASUREMENT SYSTEM ____ 5
4.0 MEASUREMENT SUMMARY ____ 6
5.0 DETAILS OF SAR EVALUATION ____ 7
6.0 EVALUATION PROCEDURES ____ 7
7.0 SYSTEM PERFORMANCE CHECK ____ 8
8.0 SIMULATED EQUIVALENT TISSUES ____ 9
9.0 SAR SAFETY LIMITS ____ 9
10.0 ROBOT SYSTEM SPECIFICATIONS ____ 10
11.0 PROBE SPECIFICATION (ET3DV6) ____ 11
12.0 PLANAR PHANTOM ____ 11
13.0 DEVICE HOLDER ____ 11
14.0 TEST EQUIPMENT LIST ____ 12
15.0 MEASUREMENT UNCERTAINTIES ____ 13
16.0 REFERENCES ____ 15
APPENDIX A - SAR MEASUREMENT DATA ____ 16
APPENDIX B - SYSTEM PERFORMANCE CHECK DATA ____ 20
APPENDIX C - MEASURED FLUID DIELECTRIC PARAMETERS ____ 23
APPENDIX D - SAR TEST SETUP PHOTOGRAPHS ____ 25
APPENDIX E - SYSTEM VALIDATION ____ 32
APPENDIX F - PROBE CALIBRATION ____ 33
APPENDIX G - PLANAR PHANTOM CERTIFICATE OF CONFORMITY ____ 34

1.0 INTRODUCTION

This measurement report demonstrates that the LXE, INC. Model: MX7 Wireless Handheld Computer/Scanner with internal 802.11b/g WLAN FCC ID: KDZLXEMX7P1 complies with the SAR (Specific Absorption Rate) RF exposure requirements specified in FCC 47 CFR §2.1093 (see reference [1]) for the General Population / Uncontrolled Exposure environment and Health Canada Safety Code 6 (see reference [2]). The test procedures described in FCC OET Bulletin 65, Supplement C, Edition 01-01 (see reference [3]) and IC RSS-102 Issue 1 (Provisional) (see reference [4]), were employed. A description of the product and operating configuration, detailed summary of the test results, methodology and procedures used in the evaluation, equipment used, and the various provisions of the rules are included within this test report.

2.0 DESCRIPTION of DEVICE UNDER TEST (DUT)

FCC Rule Part(s)	47 CFR §2.1093					
IC Rule Part(s)	RSS-102 Issue 1 (Provisional)					
Test Procedure(s)	FCC OET Bulletin 65, Supplement C (01-01)					
FCC Device Classification	Digital Transmission System (DTS)					Rule Part 15C
IC Device Classification	Low Power License-Exempt Radiocommunication Device: Category 1 Equipment					RSS-210 Issue 6
Device Description	Wireless Handheld Computer/Scanner					
Internal Transmitter(s)	802.11b/g WLAN					
FCC IDENTIFIER	KDZLXEMX7P1					
IC IDENTIFIER	1995A-MX7P					
Model(s)	MX7					
Test Sample Serial No.	MX705399633				Production Unit	
Mode(s) of Operation	802.11b/g WLAN		DSSS		Direct Sequence Spread Spectrum	
Modulation Type(s)	OFDM (Orthogonal Frequency Division Multiplexing)				54Mbps	
	CCK (Complementary Code Keying)				11Mbps	
Tx Frequency Range(s)	2412 - 2462 MHz				802.11b/g WLAN	
Max. RF Peak Conducted Output Power Measured	**Frequency (MHz)**		**802.11b (1 Mbps)**		**802.11g (11 Mbps)**	
	Low	2412	18.67 dBm	73.6 mW	16.35 dBm	43.2 mW
	Mid	2437	18.40 dBm	69.2 mW	16.15 dBm	41.2 mW
	High	2462	17.99 dBm	63.0 mW	15.32 dBm	34.0 mW
Battery Type(s) Tested	Lithium-ion		7.2 V	2200 mAh	P/N: 159904-0001	
Antenna Type(s) Tested	Internal			Omni-Directional		P/N: 159793-0001
Body-Worn Accessories Tested	Nylon Holster with Belt-Loop		No metallic components			P/N: 159890-0001

3.0 SAR MEASUREMENT SYSTEM

Celltech Labs Inc. SAR measurement facility utilizes the Dosimetric Assessment System (DASY™) manufactured by Schmid & Partner Engineering AG (SPEAG™) of Zurich, Switzerland. The DASY4 measurement system is comprised of the measurement server, robot controller, computer, near-field probe, probe alignment sensor, specific anthropomorphic mannequin (SAM) phantom, and various planar phantoms for brain and/or body SAR evaluations. The robot is a six-axis industrial robot performing precise movements to position the probe to the location (points) of maximum electromagnetic field (EMF). A cell controller system contains the power supply, robot controller, teach pendant (Joystick), and remote control, is used to drive the robot motors. The Staubli robot is connected to the cell controller to allow software manipulation of the robot. A data acquisition electronic (DAE) circuit performs the signal amplification, signal multiplexing, AD-conversion, offset measurements, mechanical surface detection, collision detection, etc. is connected to the Electro-optical coupler (EOC). The EOC performs the conversion from the optical into digital electric signal of the DAE and transfers data to the DASY4 measurement server. The DAE4 utilizes a highly sensitive electrometer-grade preamplifier with auto-zeroing, a channel and gain-switching multiplexer, a fast 16-bit AD-converter and a command decoder and control logic unit. Transmission to the DASY4 measurement server is accomplished through an optical downlink for data and status information and an optical uplink for commands and clock lines. The mechanical probe-mounting device includes two different sensor systems for frontal and sidewise probe contacts. The sensor systems are also used for mechanical surface detection and probe collision detection. The robot uses its own controller with a built in VME-bus computer.

DASY4 SAR Measurement System with planar phantom

DASY4 SAR Measurement System with planar phantom

4.0 MEASUREMENT SUMMARY

BODY-WORN SAR EVALUATION RESULTS

Freq. (MHz)	Chan.	Test Mode	Data Rate	Battery Type	Antenna Type	DUT Position to Planar Phantom	Body-worn Accessories	Accessory Thickness (cm)	Cond. Power Before Test (dBm)	SAR Drift During Test (dB)	Measured SAR 1g (W/kg)
2412	1	802.11b	1 Mbps	Li-ion	Internal	Back Side	Nylon Holster with Belt-Loop	1.5	18.67	0.0915	0.118

ANSI / IEEE C95.1 1999 - SAFETY LIMIT	BODY: 1.6 W/kg (averaged over 1 gram)	Spatial Peak Uncontrolled Exposure / General Population

Test Date(s)	October 20, 2005				Relative Humidity	33	%
Measured Fluid Type	2450 MHz Body				Atmospheric Pressure	102.6	kPa
Dielectric Constant ε_r	IEEE Target		Measured	Deviation	Ambient Temperature	23.4	°C
	52.7	± 5%	50.2	-4.7%	Fluid Temperature	22.8	°C
Conductivity σ (mho/m)	IEEE Target		Measured	Deviation	Fluid Depth	≥ 15	cm
	1.95	± 5%	2.04	+4.6%	ρ (Kg/m^3)	1000	

Note(s):

1. The measurement results were obtained with the DUT tested in the conditions described in this report. Detailed measurement data and plots showing the maximum SAR location of the DUT are reported in Appendix A.
2. If the SAR levels measured at the highest output channel were ≥ 3 dB below the SAR limit, SAR evaluation for all other selected channels was optional (per October 2005 TCB Council Workshop - see reference [7]).
3. Higher data rates and 802.11g mode were not evaluated based on the average output power levels were not > 0.25 dB from the average output power measured at the lowest data rate in 802.11b mode (per October 2005 TCB Council Workshop - see reference [7]).
4. The power drift measured by the DASY4 system for the duration of the SAR evaluation was ≤5% from the start power.
5. The DUT battery was fully charged prior to the SAR evaluation.
6. The ambient and fluid temperatures were measured prior to, and during, the fluid dielectric parameter check and the SAR evaluation. The temperatures reported were consistent for all measurement periods.
7. The dielectric parameters of the simulated tissue mixture were measured prior to the SAR evaluation using an ALS-PR-DIEL Dielectric Probe Kit and an HP 8753ET Network Analyzer (see Appendix C).
8. The SAR evaluation was performed within 24 hours of the system performance check.

2005 Celltech Labs Inc. This document is not to be reproduced in whole or in part without the prior written permission of Celltech Labs Inc.

5.0 DETAILS OF SAR EVALUATION

The LXE, INC. Model: MX7 Wireless Handheld Computer/Scanner with internal 802.11b/g WLAN FCC ID: KDZLXEMX7P1 was determined to be compliant for localized Specific Absorption Rate based on the test provisions and conditions described below. Detailed test setup photographs are shown in Appendix D.

SAR Test Configurations

1. The DUT was tested in a body-worn configuration with the handheld computer placed inside the Nylon Holster with Belt-Loop accessory (P/N: 159890-0001) and the back of the DUT facing parallel to the outer surface of the planar phantom. The back side of the Nylon Holster with Belt-Loop accessory (P/N: 159890-0001) was touching the outer surface of the planar phantom and provided a 1.5 cm spacing between the back of the DUT and the outer surface of the planar phantom.
2. The ambient and fluid temperatures were measured prior to, and during, the fluid dielectric parameter check and the SAR evaluation. The temperatures reported were consistent for all measurement periods.
3. The dielectric parameters of the simulated tissue mixture were measured prior to the SAR evaluation using an ALS-PR-DIEL Dielectric Probe Kit and an HP 8753ET Network Analyzer (see Appendix C).
4. The SAR evaluation was performed within 24 hours of the system performance check.

Test Modes & Power Settings

5. The peak conducted power levels were measured prior to the SAR evaluation using a Rohde & Schwarz FSP spectrum analyzer according to the procedures described in FCC 47 CFR §2.1046.
6. The DUT was controlled in test mode via internal test utility software program and tested at maximum power in modulated DSSS continuous transmit operation at 100% duty cycle.
7. The power drift measured by the DASY4 system for the duration of the SAR evaluation was $\leq$5% from the start power.
8. The DUT battery was fully charged prior to the SAR evaluation.

6.0 EVALUATION PROCEDURES

a. (i) The evaluation was performed in the applicable area of the phantom depending on the type of device being tested. For devices held to the ear during normal operation, both the left and right ear positions were evaluated using the SAM phantom.
(ii) For body-worn and face-held devices a planar phantom was used.

b. The SAR was determined by a pre-defined procedure within the DASY4 software. Upon completion of a reference and optical surface check, the exposed region of the phantom was scanned near the inner surface with a grid spacing of 15mm x 15mm.

An area scan was determined as follows:

c. Based on the defined area scan grid, a more detailed grid is created to increase the points by a factor of 10. The interpolation function then evaluates all field values between corresponding measurement points.

d. A linear search is applied to find all the candidate maxima. Subsequently, all maxima are removed that are >2 dB from the global maximum. The remaining maxima are then used to position the cube scans.

A 1g and 10g spatial peak SAR was determined as follows:

e. Extrapolation is used to find the points between the dipole center of the probe and the surface of the phantom. This data cannot be measured, since the center of the dipoles is 2.7 mm away from the tip of the probe and the distance between the surface and the lowest measuring point is 1.4 mm (see probe calibration document in Appendix F). The extrapolation was based on trivariate quadratics computed from the previously calculated 3D interpolated points nearest the phantom surface.

f. Interpolated data is used to calculate the average SAR over 1g and 10g cubes by spatially discretizing the entire measured cube. The volume used to determine the averaged SAR is a 1mm grid (42875 interpolated points).

g. A zoom scan volume of 32 mm x 32 mm x 30 mm (5 x 5 x 7 points) centered at the peak SAR location determined from the area scan is used for all zoom scans for devices with a transmit frequency < 800 MHz. Zoom scans for frequencies ≥ 800 MHz are determined with a scan volume of 30 mm x 30 mm x 30 mm (7 x 7 x 7) to ensure complete capture of the peak spatial-average SAR.

7.0 SYSTEM PERFORMANCE CHECK

Prior to the SAR evaluations a system check was performed using a planar phantom with a 2450MHz dipole (see Appendix E for system validation procedures). The dielectric parameters of the simulated tissue mixture were measured prior to the system performance check using an ALS-PR-DIEL Dielectric Probe Kit and an HP 8753ET Network Analyzer (see Appendix C). A forward power of 250 mW was applied to the dipole and the system was verified to a tolerance of ±10% (see Appendix B). See Table 1 below for the SAR system manufacturer's reference body SAR values from the DASY4 Operation Manual (see reference [6]).

SYSTEM PERFORMANCE CHECK EVALUATION

Test Date	2450MHz Equiv. Tissue	SAR 1g (W/kg)			Dielectric Constant ε_r			Conductivity σ (mho/m)			ρ (Kg/m³)	Amb. Temp. (°C)	Fluid Temp. (°C)	Fluid Depth (cm)	Humid. (%)	Barom. Press. (kPa)
		IEEE Target	Meas.	Dev.	IEEE Target	Meas.	Dev.	IEEE Target	Meas.	Dev.						
10/20/05	Body	12.8 ±10%	13.9	+8.6%	52.7 ±5%	50.2	-4.7%	1.95 ±5%	2.04	+4.6%	1000	23.2	22.8	≥ 15	33	102.6

Note(s):
1. The ambient and fluid temperatures were measured prior to, and during, the fluid dielectric parameter check and the system performance check. The temperatures listed in the table above were consistent for all measurement periods.

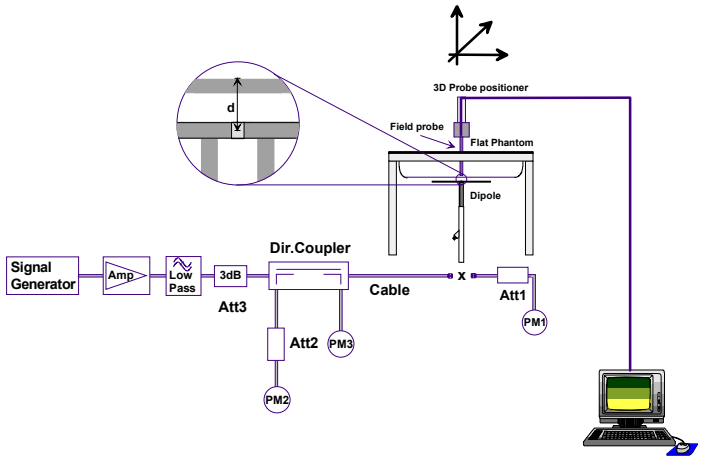

Figure 1. System Performance Check Measurement Setup

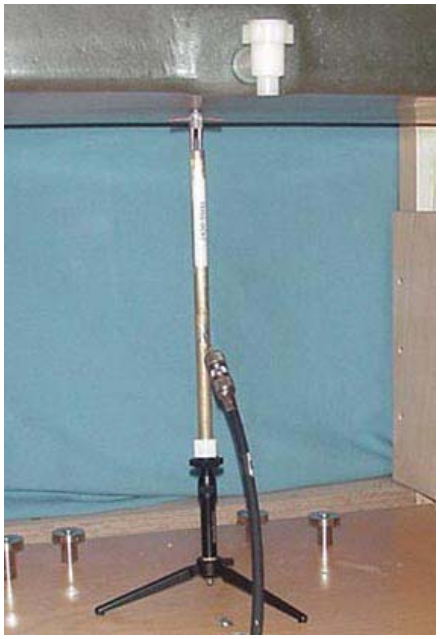

2450MHz Dipole Setup

Dipole Type	Distance [mm]	Frequency [MHz]	SAR (1g) [W/kg]	SAR (10g) [W/kg]	SAR (peak) [W/kg]
D300V2	15	300	3.02	2.06	4.36
D450V2	15	450	5.01	3.36	7.22
D835V2	15	835	9.71	6.38	14.1
D900V2	15	900	11.1	7.17	16.3
D1450V2	10	1450	29.6	16.6	49.8
D1500V2	10	1500	30.8	17.1	52.1
D1640V2	10	1640	34.4	18.7	59.4
D1800V2	10	1800	38.5	20.3	67.5
D1900V2	10	1900	39.8	20.8	69.6
D2000V2	10	2000	40.9	21.2	71.5
D2450V2	10	2450	51.2	23.7	97.6
D3000V2	10	3000	61.9	24.8	136.7

Table 32.1: Numerical reference SAR values for SPEAG dipoles and flat phantom filled with body-tissue simulating liquid. Note: All SAR values normalized to 1 W forward power.

Table 1. SAR system manufacturer's reference body SAR values

2005 Celltech Labs Inc. This document is not to be reproduced in whole or in part without the prior written permission of Celltech Labs Inc.

8.0 SIMULATED EQUIVALENT TISSUES

The 2450MHz simulated tissue mixture consisted of Glycol-monobutyl, water, and salt. The fluids were prepared according to standardized procedures and measured for dielectric parameters (permittivity and conductivity).

SIMULATED TISSUE MIXTURES		
INGREDIENT	2450 MHz Body	2450 MHz Body
	System Performance Check	DUT Evaluation
Water	69.98 %	69.98 %
Glycol Monobutyl	30.00 %	30.00 %
Salt	0.02 %	0.02 %

9.0 SAR SAFETY LIMITS

EXPOSURE LIMITS	SAR (W/Kg)	
	(General Population / Uncontrolled Exposure Environment)	(Occupational / Controlled Exposure Environment)
Spatial Average (averaged over the whole body)	0.08	0.4
Spatial Peak (averaged over any 1 g of tissue)	1.60	8.0
Spatial Peak (hands/wrists/feet/ankles averaged over 10 g)	4.0	20.0

Notes:

1. Uncontrolled environments are defined as locations where there is potential exposure of individuals who have no knowledge or control of their potential exposure.
2. Controlled environments are defined as locations where there is potential exposure of individuals who have knowledge of their potential exposure and can exercise control over their exposure.

10.0 ROBOT SYSTEM SPECIFICATIONS

Specifications

POSITIONER: Stäubli Unimation Corp. Robot Model: RX60L
Repeatability: 0.02 mm
No. of axis: 6

Data Acquisition Electronic (DAE) System

Cell Controller

Processor: AMD Athlon XP 2400+
Clock Speed: 2.0 GHz
Operating System: Windows XP Professional

Data Converter

Features: Signal Amplifier, multiplexer, A/D converter, and control logic
Software: DASY4 software
Connecting Lines: Optical downlink for data and status info.
Optical uplink for commands and clock

DASY4 Measurement Server

Function: Real-time data evaluation for field measurements and surface detection
Hardware: PC/104 166MHz Pentium CPU; 32 MB chipdisk; 64 MB RAM
Connections: COM1, COM2, DAE, Robot, Ethernet, Service Interface

E-Field Probe

Model: ET3DV6
Serial No.: 1387
Construction: Triangular core fiber optic detection system
Frequency: 10 MHz to 6 GHz
Linearity: ±0.2 dB (30 MHz to 3 GHz)

Phantom(s)

Type: Planar Phantom
Shell Material: Fiberglass
Thickness: 2.0 ±0.1 mm
Volume: Approx. 72 liters

2005 Celltech Labs Inc. This document is not to be reproduced in whole or in part without the prior written permission of Celltech Labs Inc.

11.0 PROBE SPECIFICATION (ET3DV6)

Construction:	Symmetrical design with triangular core Built-in shielding against static charges PEEK enclosure material (resistant to organic solvents, e.g. glycol)
Calibration:	In air from 10 MHz to 2.5 GHz In brain simulating tissue at frequencies of 900 MHz and 1.8 GHz (accuracy ± 8%)
Frequency:	10 MHz to >6 GHz; Linearity: ±0.2 dB (30 MHz to 3 GHz)
Directivity:	±0.2 dB in brain tissue (rotation around probe axis) ±0.4 dB in brain tissue (rotation normal to probe axis)
Dynamic Range:	5 μW/g to >100 mW/g; Linearity: ±0.2 dB
Surface Detection:	±0.2 mm repeatability in air and clear liquids over diffuse reflecting surfaces
Dimensions:	Overall length: 330 mm Tip length: 16 mm Body diameter: 12 mm Tip diameter: 6.8 mm Distance from probe tip to dipole centers: 2.7 mm
Application:	General dosimetry up to 3 GHz Compliance tests of portable devices

ET3DV6 E-Field Probe

12.0 PLANAR PHANTOM

The planar phantom is a fiberglass shell phantom with a 2.0 mm (+/-0.2mm) thick device measurement area at the center of the phantom for SAR evaluations of devices with a larger surface area than the planar section of the SAM phantom. The planar phantom is integrated in a wooden table (see Appendix G for dimensions and specifications of the planar phantom).

Planar Phantom

13.0 DEVICE HOLDER

The DASY4 device holder has two scales for device rotation (with respect to the body axis) and the device inclination (with respect to the line between the ear openings). The plane between the ear openings and the mouth tip has a rotation angle of 65°. The bottom plate contains three pair of bolts for locking the device holder. The device holder positions are adjusted to the standard measurement positions in the three sections. For evaluations of larger devices such as Laptop and Tablet PCs, a Plexiglas platform is attached to the device holder.

Device Holder

14.0 TEST EQUIPMENT LIST

TEST EQUIPMENT		ASSET NO.	SERIAL NO.	DATE CALIBRATED		CALIBRATION DUE DATE
USED	DESCRIPTION					
x	Schmid & Partner DASY4 System	-	-	-		-
x	-DASY4 Measurement Server	00158	1078	N/A		N/A
x	-Robot	00046	599396-01	N/A		N/A
x	-DAE4	00019	353	15Jun05		15Jun06
	-DAE3	00018	370	25Jan05		25Jan06
x	-ET3DV6 E-Field Probe	00016	1387	18Mar05		18Mar06
	-ET3DV6 E-Field Probe	00017	1590	20May05		20May06
	-EX3DV4 E-Field Probe	00125	3547	21Jan05		21Jan06
	-300MHz Validation Dipole	00023	135	26Oct04		26Oct05
	-450MHz Validation Dipole	00024	136	04Nov04		04Nov05
	-835MHz Validation Dipole	00022	411	**Brain**	30Mar05	30Mar06
				Body	12Apr05	12Apr06
	-900MHz Validation Dipole	00020	054	**Brain**	10Jun05	10Jun06
				Body	10Jun05	10Jun06
	-1800MHz Validation Dipole	00021	247	**Brain**	14Jun05	14Jun06
				Body	14Jun05	14Jun06
	-1900MHz Validation Dipole	00032	151	**Brain**	17Jun05	17Jun06
				Body	22Apr05	22Apr06
	-2450MHz Validation Dipole	00025	150	**Brain**	20Sep05	20Sep06
x				**Body**	22Apr05	22Apr06
	-5000MHz Validation Dipole	00126	1031	**Brain**	11Jan05	11Jan06
				Body	11Jan05	11Jan06
	-SAM Phantom V4.0C	00154	1033	N/A		N/A
x	-Barski Planar Phantom	00155	03-01	N/A		N/A
	-Plexiglas Planar Phantom	00156	161	N/A		N/A
	-Validation Planar Phantom	00157	137	N/A		N/A
	HP 85070C Dielectric Probe Kit	00033	N/A	N/A		N/A
x	ALS-PR-DIEL Dielectric Probe Kit	00160	260-00953	N/A		N/A
x	Gigatronics 8652A Power Meter	00110	1835801	16Apr05		16Apr06
x	Gigatronics 80701A Power Sensor	00012	1834350	12Sep05		12Sep06
x	Gigatronics 80701A Power Sensor	00014	1833699	07Sep05		07Sep06
	Gigatronics 80701A Power Sensor	00109	1834366	16Apr05		16Apr06
x	HP 8753ET Network Analyzer	00134	US39170292	04May05		04May06
x	HP 8648D Signal Generator	00005	3847A00611	29Apr05		29Apr06
	Rohde & Schwarz SMR40 Signal Generator	00006	100104	12Apr05		12Apr06
x	Rohde & Schwarz FSP Spectrum Analyzer	N/A	100102	N/A		N/A
x	Amplifier Research 5S1G4 Power Amplifier	00106	26235	N/A		N/A

2005 Celltech Labs Inc. This document is not to be reproduced in whole or in part without the prior written permission of Celltech Labs Inc.

15.0 MEASUREMENT UNCERTAINTIES

UNCERTAINTY BUDGET FOR DEVICE EVALUATION						
Error Description	**Uncertainty Value ±%**	**Probability Distribution**	**Divisor**	**ci 1g**	**Uncertainty Value ±% (1g)**	**V_i or V_{eff}**
Measurement System						
Probe calibration	5.9	Normal	1	1	5.9	∞
Axial isotropy of the probe	4.7	Rectangular	1.732050808	0.7	1.9	∞
Spherical isotropy of the probe	9.6	Rectangular	1.732050808	0.7	3.9	∞
Spatial resolution	0	Rectangular	1.732050808	1	0.0	∞
Boundary effects	1	Rectangular	1.732050808	1	0.6	∞
Probe linearity	4.7	Rectangular	1.732050808	1	2.7	∞
Detection limit	1	Rectangular	1.732050808	1	0.6	∞
Readout electronics	0.3	Normal	1	1	0.3	∞
Response time	0.8	Rectangular	1.732050808	1	0.5	∞
Integration time	2.6	Rectangular	1.732050808	1	1.5	∞
RF ambient conditions	3	Rectangular	1.732050808	1	1.7	∞
Mech. constraints of robot	0.4	Rectangular	1.732050808	1	0.2	∞
Probe positioning	2.9	Rectangular	1.732050808	1	1.7	∞
Extrapolation & integration	1	Rectangular	1.732050808	1	0.6	∞
Test Sample Related						
Device positioning	2.9	Normal	1	1	2.9	12
Device holder uncertainty	3.6	Normal	1	1	3.6	8
Power drift	5	Rectangular	1.732050808	1	2.9	∞
Phantom and Setup						
Phantom uncertainty	4	Rectangular	1.732050808	1	2.3	∞
Liquid conductivity (target)	5	Rectangular	1.732050808	0.64	1.8	∞
Liquid conductivity (measured)	2.5	Normal	1	0.64	1.6	∞
Liquid permittivity (target)	5	Rectangular	1.732050808	0.6	1.7	∞
Liquid permittivity (measured)	2.5	Normal	1	0.6	1.5	∞
Combined Standard Uncertainty					**10.79**	
Expanded Uncertainty (k=2)					**21.59**	

Measurement Uncertainty Table in accordance with IEEE Standard 1528-2003 (see reference [5])

MEASUREMENT UNCERTAINTIES (Cont.)

UNCERTAINTY BUDGET FOR SYSTEM VALIDATION						
Error Description	**Uncertainty Value ±%**	**Probability Distribution**	**Divisor**	**ci 1g**	**Uncertainty Value ±% (1g)**	**V_i or V_{eff}**
Measurement System						
Probe calibration	5.9	Normal	1	1	5.9	∞
Axial isotropy of the probe	4.7	Rectangular	1.732050808	1	2.7	∞
Spherical isotropy of the probe	0	Rectangular	1.732050808	1	0.0	∞
Spatial resolution	0	Rectangular	1.732050808	1	0.0	∞
Boundary effects	1	Rectangular	1.732050808	1	0.6	∞
Probe linearity	4.7	Rectangular	1.732050808	1	2.7	∞
Detection limit	1	Rectangular	1.732050808	1	0.6	∞
Readout electronics	0.3	Normal	1	1	0.3	∞
Response time	0	Rectangular	1.732050808	1	0.0	∞
Integration time	0	Rectangular	1.732050808	1	0.0	∞
RF ambient conditions	3	Rectangular	1.732050808	1	1.7	∞
Mech. constraints of robot	0.4	Rectangular	1.732050808	1	0.2	∞
Probe positioning	2.9	Rectangular	1.732050808	1	1.7	∞
Extrapolation & integration	1	Rectangular	1.732050808	1	0.6	∞
Test Sample Related						
Dipole Positioning	2	Normal	1.732050808	1	1.2	∞
Power & Power Drift	4.7	Normal	1.732050808	1	2.7	∞
Phantom and Setup						
Phantom uncertainty	4	Rectangular	1.732050808	1	2.3	∞
Liquid conductivity (target)	5	Rectangular	1.732050808	0.64	1.8	∞
Liquid conductivity (measured)	2.5	Normal	1	0.64	1.6	∞
Liquid permittivity (target)	5	Rectangular	1.732050808	0.6	1.7	∞
Liquid permittivity (measured)	2.5	Normal	1	0.6	1.5	∞
Combined Standard Uncertainty					**9.04**	
Expanded Uncertainty (k=2)					**18.08**	

Measurement Uncertainty Table in accordance with IEEE Standard 1528-2003 (see reference [5])

16.0 REFERENCES

[1] Federal Communications Commission, “Radiofrequency radiation exposure evaluation: portable devices”, Rule Part 47 CFR §2.1093: 1999.

[2] Health Canada, “Limits of Human Exposure to Radiofrequency Electromagnetic Fields in the Frequency Range from 3 kHz to 300 GHz”, Safety Code 6: 1999.

[3] Federal Communications Commission, “Evaluating Compliance with FCC Guidelines for Human Exposure to Radio frequency Electromagnetic Fields”, OET Bulletin 65, Supplement C (Edition 01-01), FCC, Washington, D.C.: June 2001.

[4] Industry Canada, “Evaluation Procedure for Mobile and Portable Radio Transmitters with respect to Health Canada’s Safety Code 6 for Exposure of Humans to Radio Frequency Fields”, Radio Standards Specification RSS-102 Issue 1 (Provisional): September 1999.

[5] IEEE Standard 1528-2003, “Recommended Practice for Determining the Peak Spatial-Average Specific Absorption Rate (SAR) in the Human Head from Wireless Communications Devices: Measurement Techniques”: December 2003.

[6] Schmid & Partner Engineering AG, “DASY4 Manual”, V4.5: March 2005.

[7] TCB Council Workshop Presentation, “802.11a/b/g SAR Procedures and Default Test Channels”: October 2005.

APPENDIX A - SAR MEASUREMENT DATA

Date Tested: 10/20/2005

Body-Worn SAR - 802.11b - 1 Mbps - Back Side of DUT - With Nylon Case & Belt-Loop Accessory

DUT: LXE, Inc. Model: MX7; Type: Wireless Handheld Computer with 802.11b/g WLAN; Serial: MX705399633

Ambient Temp: 23.4 °C; Fluid Temp: 22.8 °C Barometric Pressure: 102.6 kPa; Humidity: 33%

Communication System: DSSS WLAN (802.11b)
RF Output Power: 18.67 dBm (Peak Conducted)
7.2V, 2200mAh Li-ion Battery (P/N: 159904-0001)
Frequency: 2412 MHz; Channel 1; Duty Cycle: 1:1
Medium: M2450 (σ = 2.04 mho/m; ε_r = 50.2; ρ = 1000 kg/m^3)

- Probe: ET3DV6 - SN1387; ConvF(4.3, 4.3, 4.3); Calibrated: 18/03/2005
- Sensor-Surface: 4mm (Mechanical Surface Detection)
- Electronics: DAE4 Sn353; Calibrated: 15/06/2005
- Phantom: Barski Industries; Type: Fiberglas Planar; Serial: 03-01
- Measurement SW: DASY4, V4.6 Build 19; Postprocessing SW: SEMCAD, V1.8 Build 159

Body-Worn SAR - 802.11b - 1.5 cm Nylon Holster and Belt-Loop Spacing from Back of DUT to Planar Phantom - Low Channel
Area Scan (9x18x1): Measurement grid: dx=15mm, dy=15mm

Body-Worn SAR - 802.11b - 1.5 cm Nylon Holster and Belt-Loop Spacing from Back of DUT to Planar Phantom - Low Channel
Zoom Scan (7x7x7)/Cube 0: Measurement grid: dx=5mm, dy=5mm, dz=5mm
Reference Value = 8.09 V/m; Power Drift = 0.0915 dB
Peak SAR (extrapolated) = 0.230 W/kg
SAR(1 g) = 0.118 mW/g; SAR(10 g) = 0.070 mW/g

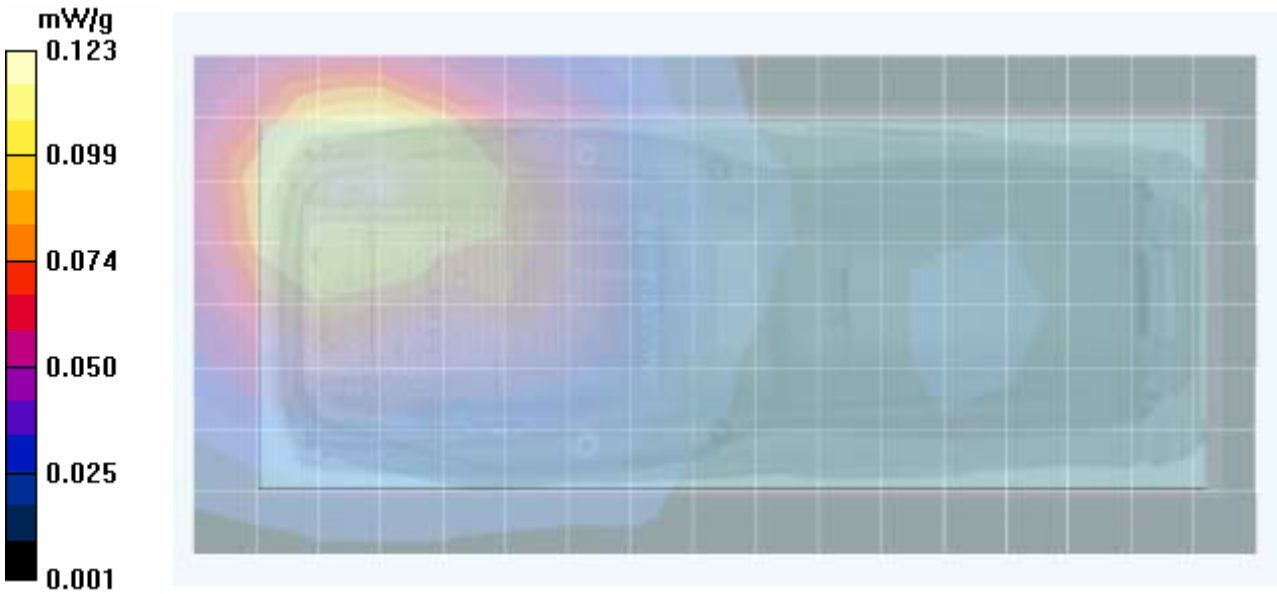

Z-Axis Scan

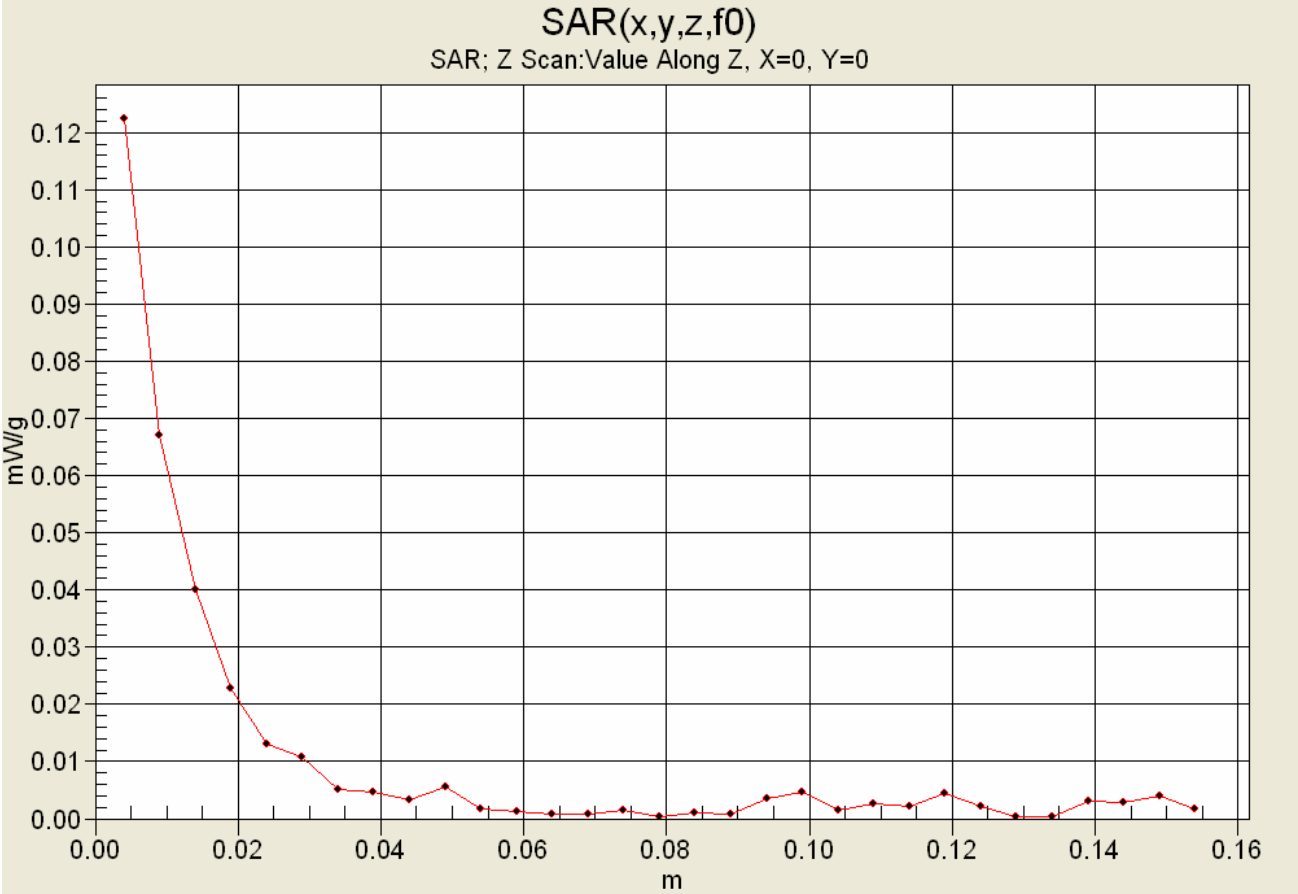
SAR(x,y,z,f0)
SAR; Z Scan:Value Along Z, X=0, Y=0
mW/g
0.12
0.11
0.10
0.09
0.08
0.07
0.06
0.05
0.04
0.03
0.02
0.01
0.00
0.00
0.02
0.04
0.06
0.08
0.10
0.12
0.14
0.16
m

Fluid Depth (≥ 15 cm)

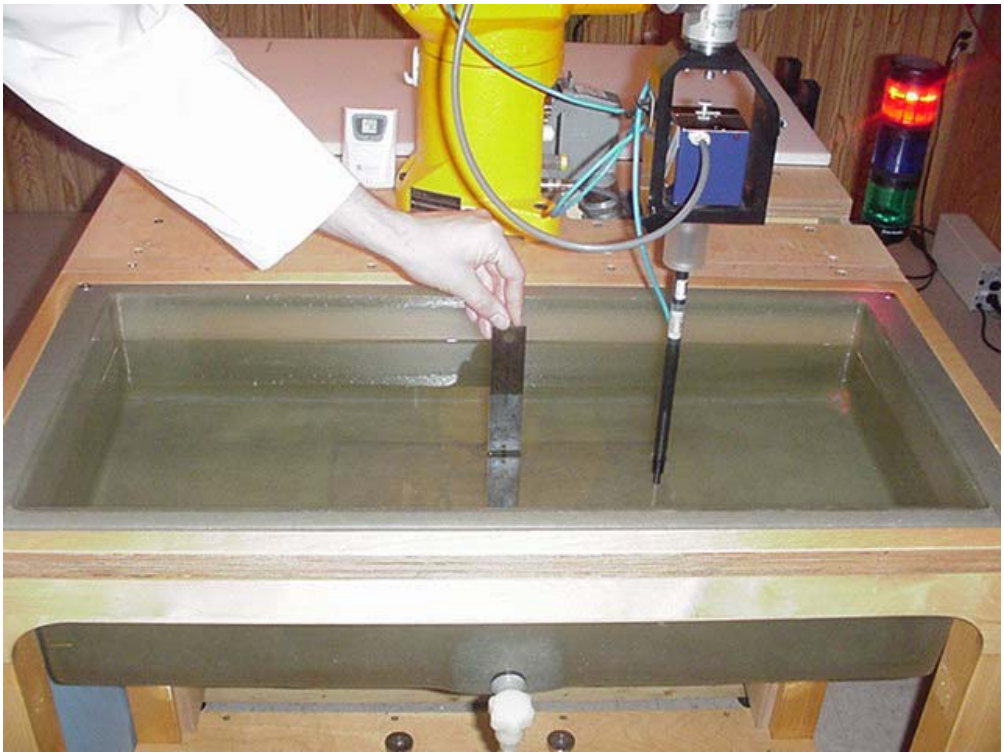

2005 Celltech Labs Inc. This document is not to be reproduced in whole or in part without the prior written permission of Celltech Labs Inc.

APPENDIX B - SYSTEM PERFORMANCE CHECK DATA

Date Tested: 10/20/2005

System Performance Check (Body) - 2450 MHz Dipole

DUT: Dipole 2450 MHz; Model: D2450V2; Type: System Performance Check; Serial: 150; Calibrated: 04/22/2005

Ambient Temp: 23.2 °C; Fluid Temp: 22.8 °C; Barometric Pressure: 102.6 kPa; Humidity: 33%

Communication System: CW
Forward Conducted Power: 250 mW
Frequency: 2450 MHz; Duty Cycle: 1:1
Medium: M2450 (σ = 2.04 mho/m; ε_r = 50.2; ρ = 1000 kg/m^3)

- Probe: ET3DV6 - SN1387; ConvF(4.3, 4.3, 4.3); Calibrated: 18/03/2005
- Sensor-Surface: 4mm (Mechanical Surface Detection)
- Electronics: DAE4 Sn353; Calibrated: 15/06/2005
- Phantom: Barski Industries; Type: Fiberglas Planar; Serial: 03-01
- Measurement SW: DASY4, V4.6 Build 19; Postprocessing SW: SEMCAD, V1.8 Build 159

2450 MHz Dipole - System Performance Check/Area Scan (6x10x1):
Measurement grid: dx=10mm, dy=10mm

2450 MHz Dipole - System Performance Check/Zoom Scan (7x7x7)/Cube 0:
Measurement grid: dx=5mm, dy=5mm, dz=5mm
Reference Value = 87.0 V/m; Power Drift = -0.015 dB
Peak SAR (extrapolated) = 32.6 W/kg
SAR(1 g) = 13.9 mW/g; SAR(10 g) = 6.27 mW/g

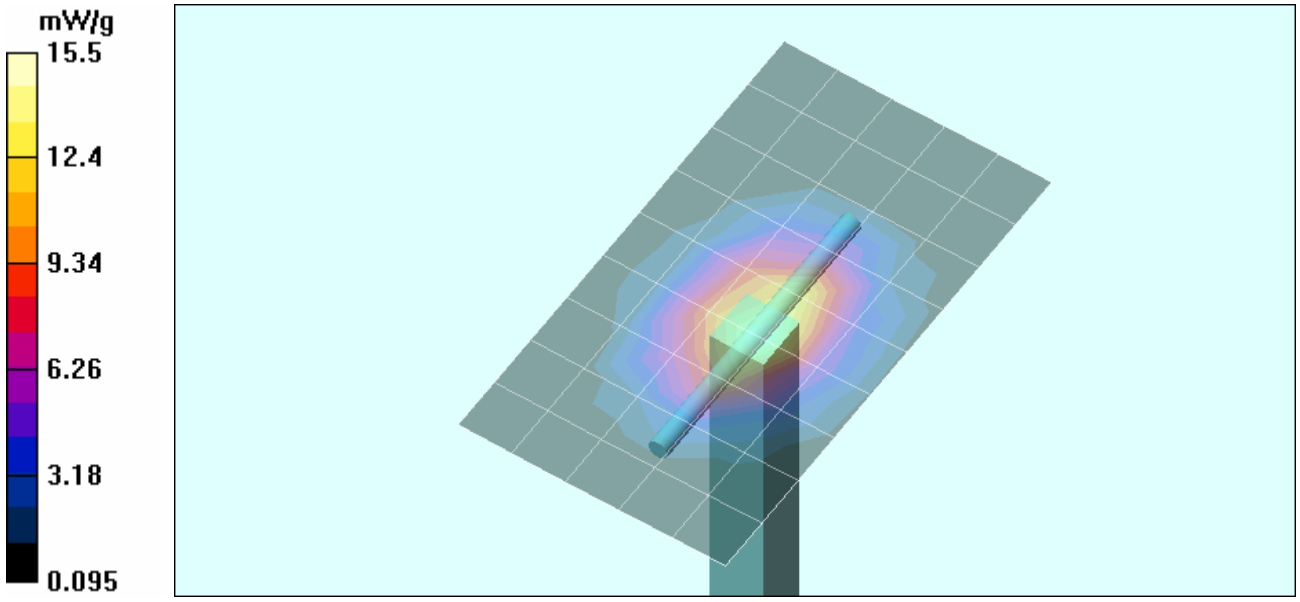

Z-Axis Scan

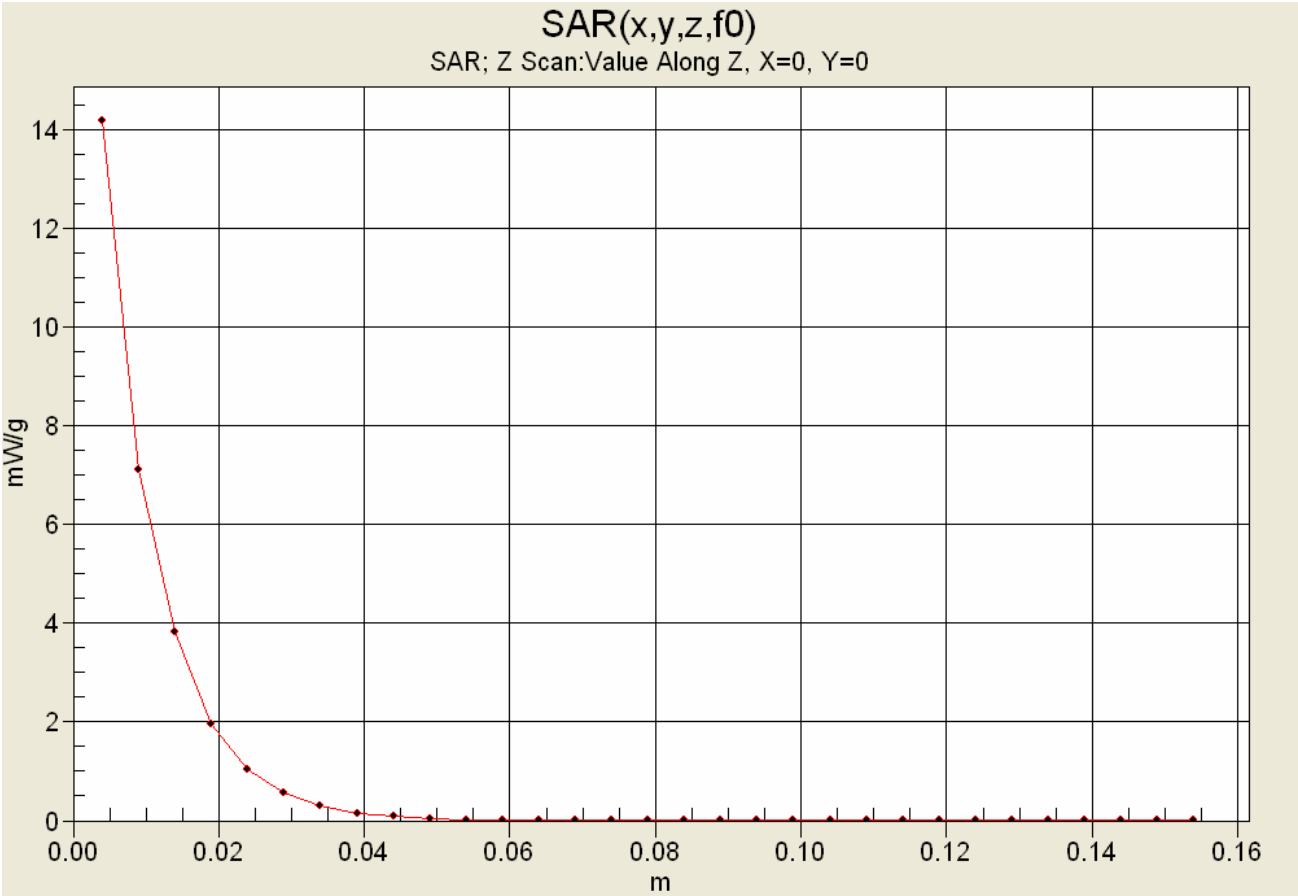
SAR(x,y,z,f0)
SAR; Z Scan:Value Along Z, X=0, Y=0
mW/g
14
12
10
8
6
4
2
0
0.00
0.02
0.04
0.06
0.08
0.10
0.12
0.14
0.16
m

APPENDIX C - MEASURED FLUID DIELECTRIC PARAMETERS

2450 MHz System Performance Check & DUT Evaluation (Body)

****

Celltech Labs Inc.
Test Result for UIM Dielectric Parameter
Thu 20/Oct/2005
Frequency(GHz)
FCC_eHFCC Bulletin 65 Supplement C (June 2001) Limits for Head Epsilon
FCC_sH FCC Bulletin 65 Supplement C (June 2001) Limits for Head Sigma
FCC_eB FCC Limits for Body Epsilon
FCC_sB FCC Limits for Body Sigma
Test_e Epsilon of UIM
Test_s Sigma of UIM

****

Freq	FCC_eB	FCC_sB	Test_e	Test_s
2.3500	52.83	1.85	50.49	1.928
2.3600	52.82	1.86	50.65	1.922
2.3700	52.81	1.87	50.55	1.951
2.3800	52.79	1.88	50.44	1.962
2.3900	52.78	1.89	50.35	1.972
2.4000	52.77	1.90	50.39	1.991
2.4100	52.75	1.91	50.46	2.003
2.4200	52.74	1.92	50.44	2.019
2.4300	52.73	1.93	50.20	2.027
2.4400	52.71	1.94	50.25	2.046
2.4500	52.70	1.95	50.22	2.036
2.4600	52.69	1.96	50.12	2.070
2.4700	52.67	1.98	50.12	2.096
2.4800	52.66	1.99	49.92	2.107
2.4900	52.65	2.01	49.94	2.124
2.5000	52.64	2.02	49.99	2.134
2.5100	52.62	2.04	49.87	2.155
2.5200	52.61	2.05	49.88	2.179
2.5300	52.60	2.06	49.87	2.190
2.5400	52.59	2.08	49.74	2.180
2.5500	52.57	2.09	49.78	2.203

2005 Celltech Labs Inc. This document is not to be reproduced in whole or in part without the prior written permission of Celltech Labs Inc.

APPENDIX D - SAR TEST SETUP PHOTOGRAPHS

SAR TEST SETUP PHOTOGRAPHS

1.5 cm Nylon Holster and Belt-Loop Accessory Separation Distance from Back Side of DUT to Planar Phantom

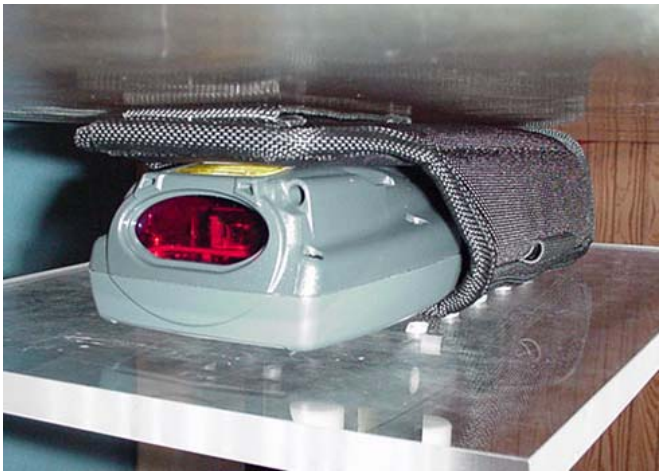

DUT PHOTOGRAPHS

Front Side of DUT

Back Side of DUT

DUT PHOTOGRAPHS

Left Side of DUT

Right Side of DUT

Top End of DUT

Bottom End of DUT

DUT PHOTOGRAPHS

Front Side of DUT in Nylon Holster Accessory

Back Side of Nylon Holster Accessory with Belt-Loop

Left Side of DUT in Nylon Holster Accessory with Belt-Loop

Right Side of DUT in Nylon Holster Accessory with Belt-Loop

2005 Celltech Labs Inc. This document is not to be reproduced in whole or in part without the prior written permission of Celltech Labs Inc.

DUT PHOTOGRAPHS

Top end of DUT in Nylon Holster Accessory

Bottom end of DUT in Nylon Holster Accessory

2005 Celltech Labs Inc. This document is not to be reproduced in whole or in part without the prior written permission of Celltech Labs Inc.

DUT PHOTOGRAPHS

DUT Battery Compartment

Li-ion Battery (P/N: 159904-0001)

2005 Celltech Labs Inc. This document is not to be reproduced in whole or in part without the prior written permission of Celltech Labs Inc.

APPENDIX E - SYSTEM VALIDATION

2450 MHz SYSTEM VALIDATION DIPOLE

Type:	**2450 MHz Validation Dipole**
Serial Number:	**150**
Place of Calibration:	**Celltech Labs Inc.**
Date of Calibration:	**April 22, 2005**

Celltech Labs Inc. hereby certifies that this device has been calibrated on the date indicated above.

Calibrated by:

Approved by:

Celltech Labs Inc. 1955 Moss Court, Kelowna, B.C. Canada V1Y 9L3
Tel. 250-448-7047 • Fax. 250-448-7046 • e-mail: info@celltechlabs.com
www.celltechlabs.com

1. Dipole Construction & Electrical Characteristics

The validation dipole was constructed in accordance with the IEEE Std "Recommended Practice for Determining the Spatial-Peak Specific Absorption Rate (SAR) in the Human Body Due to Wireless Communications Devices: Experimental Techniques". The electrical properties were measured using an HP 8753E Network Analyzer. The network analyzer was calibrated to the validation dipole N-type connector feed point using an HP85032E Type N calibration kit. The dipole was placed parallel to a planar phantom at a separation distance of 10.0mm from the simulating fluid using a loss-less dielectric spacer. The measured input impedance is:

Feed point impedance at 2450 MHz	Re{Z} = 45.605Ω
	Im{Z} = 1.1133Ω
Return Loss at 2450 MHz	-26.482 dB

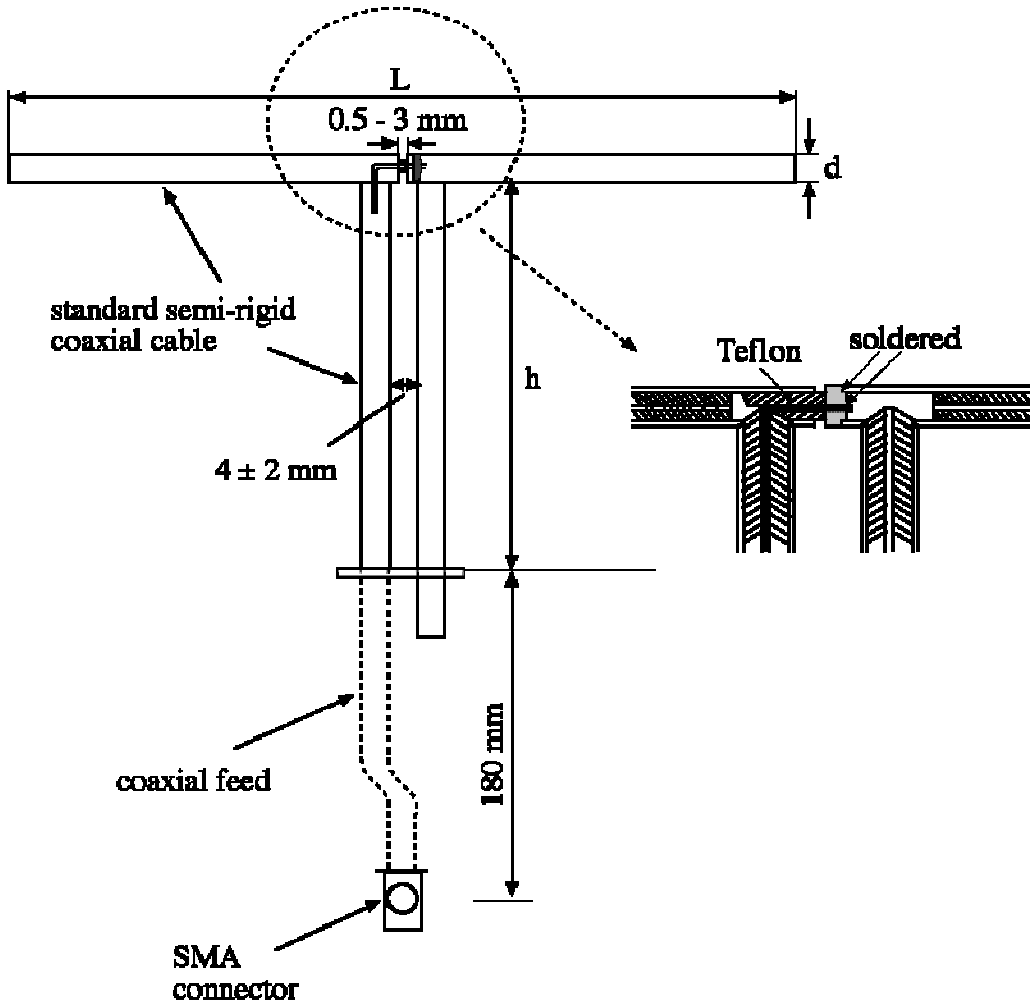

2. Validation Dipole VSWR Data

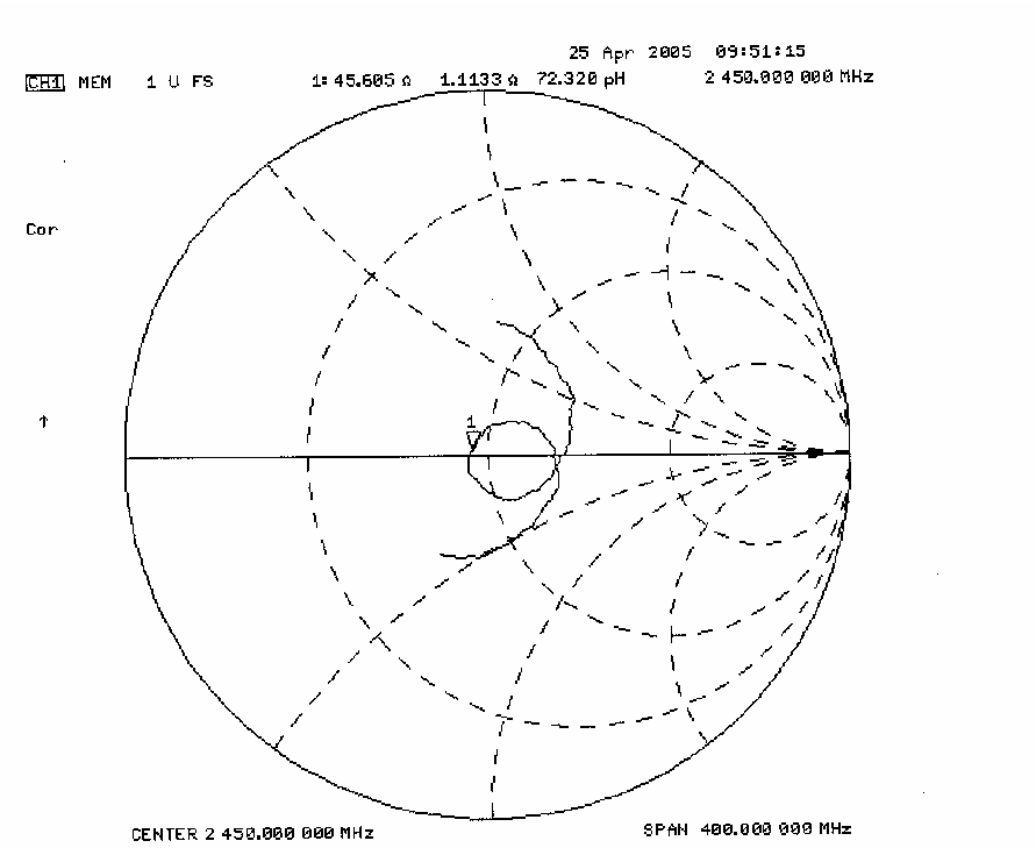

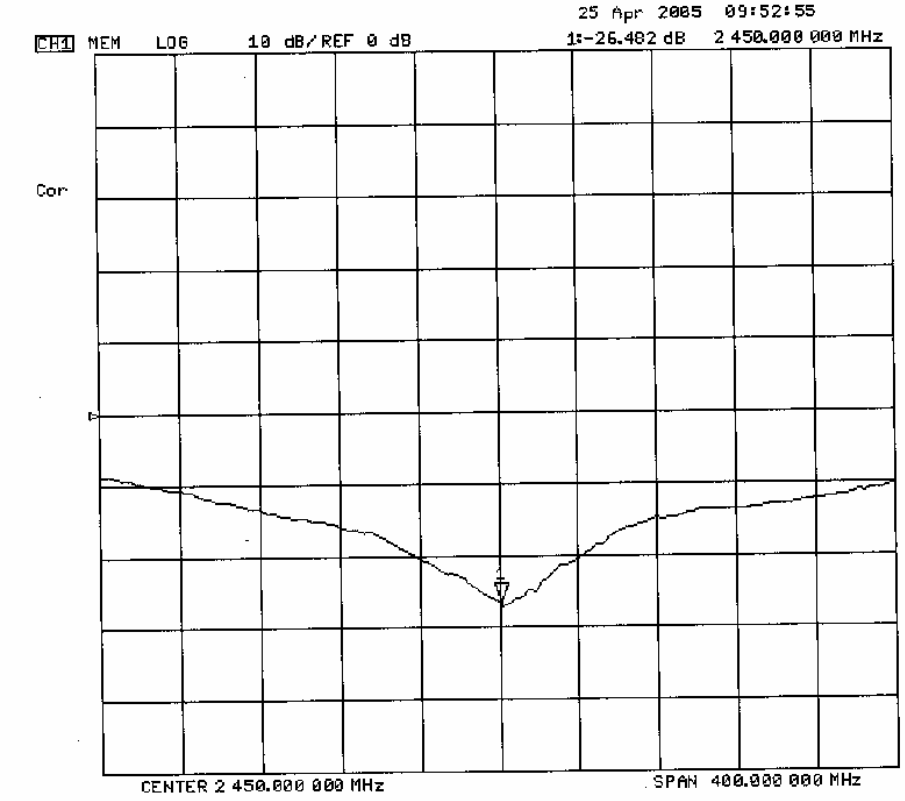

3. Validation Dipole Dimensions

Frequency (MHz)	L (mm)	H (mm)	D (mm)
300	420.0	250.0	6.2
450	288.0	167.0	6.2
835	161.0	89.8	3.6
900	149.0	83.3	3.6
1450	89.1	51.7	3.6
1800	72.0	41.7	3.6
1900	68.0	39.5	3.6
2000	64.5	37.5	3.6
2450	51.8	30.6	3.6
3000	41.5	25.0	3.6

4. Validation Phantom

The validation phantom is a Fiberglass shell planar phantom manufactured by Barski Industries Ltd. The phantom is in conformance with the requirements defined by IEEE SCC34-SC2 for the dosimetric evaluations of body-worn and lap-held operating configurations. Reference markings on the phantom allow the complete setup of all predefined phantom positions and measurement grids.

Shell Thickness: 2.0 ± 0.2 mm
Filling Volume: Approx. 55 liters
Dimensions: 44 cm (W) x 94 cm (L)

5. 2450 MHz System Validation Setup

6. 2450 MHz Dipole Setup

7. Measurement Conditions

The phantom was filled with 2450 MHz Body simulating tissue:

Relative Permittivity:	50.2
Conductivity:	1.97 mho/m
Fluid Temperature:	23.9 °C
Fluid Depth:	≥ 15.0 cm

Environmental Conditions:

Ambient Temperature:	25.7 °C
Humidity:	30 %
Barometric Pressure:	102.6 kPa

The 2450 MHz simulated Body tissue mixture consists of the following ingredients:

Ingredient	Percentage by weight
Water	69.98%
Glycol Monobutyl	30.00%
Salt	0.02%
Target Dielectric Parameters at 22°C	ε_r = 52.7 (+/-5%) σ = 1.95 S/m (+/-5%)

8. SAR Measurement

The SAR measurement was performed with the E-field probe in mechanical detection mode only. The setup and determination of the forward power into the dipole was performed using the following procedures.

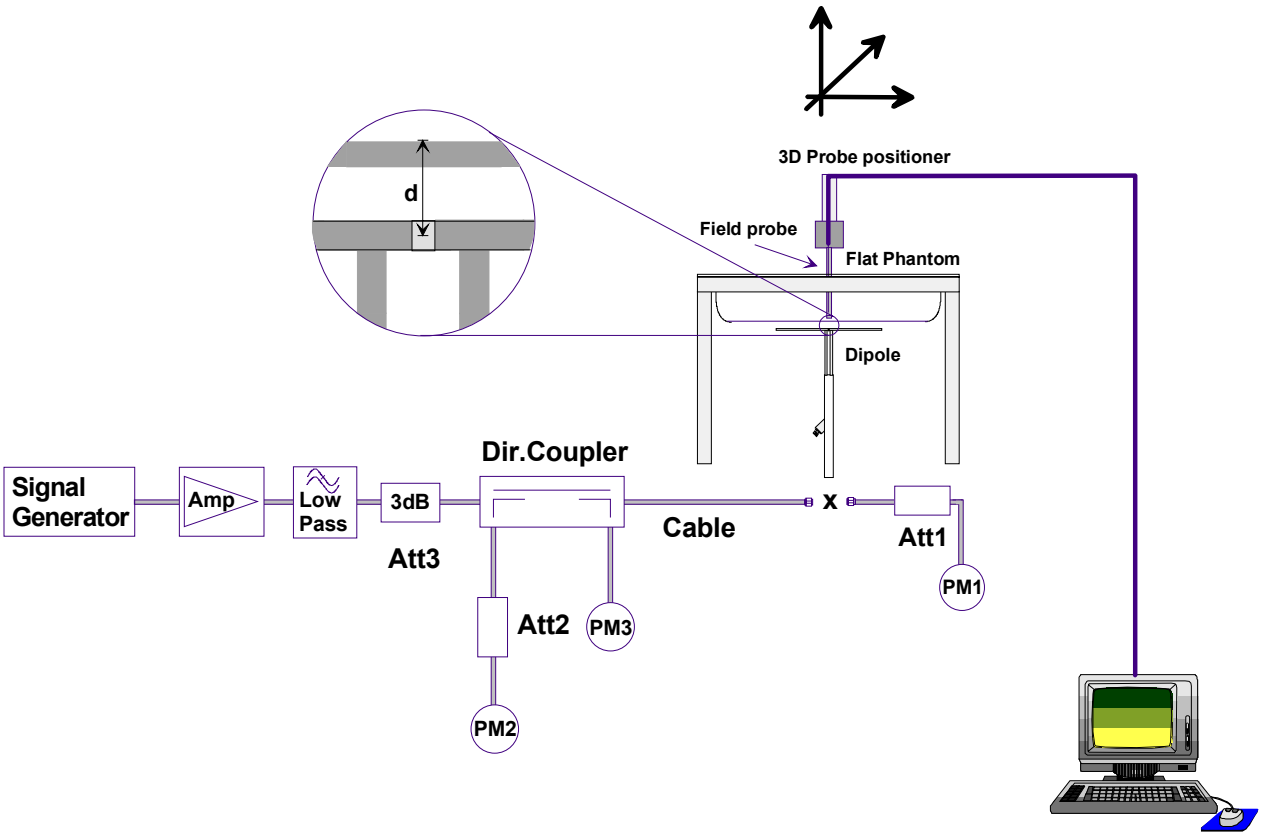

First the power meter PM1 (including attenuator Att1) is connected to the cable to measure the forward power at the location of the dipole connector (X). The signal generator is adjusted for the desired forward power at the dipole connector (taking into account the attenuation of Att1) as read by power meter PM2. After connecting the cable to the dipole, the signal generator is readjusted for the same reading at power meter PM2. If the signal generator does not allow adjustment in 0.01dB steps, the remaining difference at PM2 must be taken into consideration. PM3 records the reflected power from the dipole to ensure that the value is not changed from the previous value. The reflected power should be 20dB below the forward power.

9. Validation Dipole SAR Test Results

Ten SAR measurements were performed in order to achieve repeatability and to establish an average target value.

Validation Measurement	SAR @ 0.25W Input averaged over 1g	SAR @ 1W Input averaged over 1g	SAR @ 0.25W Input averaged over 10g	SAR @ 1W Input averaged over 10g	Peak SAR @ 0.25W Input
Test 1	12.6	50.4	5.86	23.44	27.7
Test 2	12.6	50.4	5.86	23.44	27.4
Test 3	12.6	50.4	5.87	23.48	27.4
Test 4	12.6	50.4	5.86	23.44	27.3
Test 5	12.6	50.4	5.86	23.44	27.4
Test 6	12.6	50.4	5.87	23.48	27.8
Test 7	12.7	50.8	5.88	23.52	27.7
Test 8	12.7	50.8	5.88	23.52	27.8
Test 9	12.6	50.4	5.87	23.48	27.6
Test10	12.7	50.8	5.88	23.52	27.7
Average Value	12.63	50.52	5.869	23.48	27.58

The results have been normalized to 1W (forward power) into the dipole.

Target SAR @ 1 Watt Input averaged over 1 gram (W/kg)		Measured SAR @ 1 Watt Input averaged over 1 gram (W/kg)	Deviation from Target (%)	Target SAR @ 1 Watt Input averaged over 10 grams (W/kg)		Measured SAR @ 1 Watt Input averaged over 10 grams (W/kg)	Deviation from Target (%)
51.2	+/- 10%	50.52	- 1.3	23.7	+/- 10%	23.48	- 0.93

Dipole Type	Distance [mm]	Frequency [MHz]	SAR (1g) [W/kg]	SAR (10g) [W/kg]	SAR (peak) [W/kg]
D300V2	15	300	3.02	2.06	4.36
D450V2	15	450	5.01	3.36	7.22
D835V2	15	835	9.71	6.38	14.1
D900V2	15	900	11.1	7.17	16.3
D1450V2	10	1450	29.6	16.6	49.8
D1500V2	10	1500	30.8	17.1	52.1
D1640V2	10	1640	34.4	18.7	59.4
D1800V2	10	1800	38.5	20.3	67.5
D1900V2	10	1900	39.8	20.8	69.6
D2000V2	10	2000	40.9	21.2	71.5
D2450V2	10	2450	51.2	23.7	97.6
D3000V2	10	3000	61.9	24.8	136.7

Table 32.1: Numerical reference SAR values for SPEAG dipoles and flat phantom filled with body-tissue simulating liquid. Note: All SAR values normalized to 1 W forward power.

2450 MHz System Validation - April 22, 2005

DUT: Dipole 2450 MHz; Type: D2450V2; Serial: 150; Calibrated: 04/22/2005
Ambient Temp: 25.7 ºC; Fluid Temp: 23.9 ºC; Barometric Pressure: 102.6 kPa; Humidity: 30%
Communication System: CW
Frequency: 2450 MHz; Duty Cycle: 1:1
Medium: M2450 Medium parameters used: f = 2450 MHz; σ = 1.97 mho/m; ε_r = 50.2; ρ = 1000 kg/m^3
- Probe: ET3DV6 - SN1590; ConvF(4.22, 4.22, 4.22); Calibrated: 24/05/2004
- Sensor-Surface: 4mm (Mechanical Surface Detection)
- Electronics: DAE3 Sn353; Calibrated: 06/07/2004
- Phantom: Barski Industries; Type: Fiberglas Planar; Serial: 03-01
- Measurement SW: DASY4, V4.5 Build 19; Postprocessing SW: SEMCAD, V1.8 Build 146

2450 MHz System Validation/Area Scan (6x10x1): Measurement grid: dx=10mm, dy=10mm

2450 MHz System Validation/Zoom Scan (7x7x7)/Cube 0: Measurement grid: dx=5mm, dy=5mm, dz=5mm
Reference Value = 88.7 V/m; Power Drift = -0.010 dB
Peak SAR (extrapolated) = 27.7 W/kg
SAR(1 g) = 12.6 mW/g; SAR(10 g) = 5.86 mW/g

2450 MHz System Validation/Zoom Scan 2 (7x7x7)/Cube 0: Measurement grid: dx=5mm, dy=5mm, dz=5mm
Reference Value = 89.1 V/m; Power Drift = 0.00 dB
Peak SAR (extrapolated) = 27.4 W/kg
SAR(1 g) = 12.6 mW/g; SAR(10 g) = 5.86 mW/g

2450 MHz System Validation/Zoom Scan 3 (7x7x7)/Cube 0: Measurement grid: dx=5mm, dy=5mm, dz=5mm
Reference Value = 89.0 V/m; Power Drift = 0.015 dB
Peak SAR (extrapolated) = 27.4 W/kg
SAR(1 g) = 12.6 mW/g; SAR(10 g) = 5.87 mW/g

2450 MHz System Validation/Zoom Scan 4 (7x7x7)/Cube 0: Measurement grid: dx=5mm, dy=5mm, dz=5mm
Reference Value = 89.9 V/m; Power Drift = 0.00 dB
Peak SAR (extrapolated) = 27.3 W/kg
SAR(1 g) = 12.6 mW/g; SAR(10 g) = 5.86 mW/g

2450 MHz System Validation/Zoom Scan 5 (7x7x7)/Cube 0: Measurement grid: dx=5mm, dy=5mm, dz=5mm
Reference Value = 89.5 V/m; Power Drift = 0.010 dB
Peak SAR (extrapolated) = 27.4 W/kg
SAR(1 g) = 12.6 mW/g; SAR(10 g) = 5.86 mW/g

2450 MHz System Validation/Zoom Scan 6 (7x7x7)/Cube 0: Measurement grid: dx=5mm, dy=5mm, dz=5mm
Reference Value = 89.0 V/m; Power Drift = -0.042 dB
Peak SAR (extrapolated) = 27.8 W/kg
SAR(1 g) = 12.6 mW/g; SAR(10 g) = 5.87 mW/g

2450 MHz System Validation/Zoom Scan 7 (7x7x7)/Cube 0: Measurement grid: dx=5mm, dy=5mm, dz=5mm
Reference Value = 89.7 V/m; Power Drift = 0.01 dB
Peak SAR (extrapolated) = 27.7 W/kg
SAR(1 g) = 12.7 mW/g; SAR(10 g) = 5.88 mW/g

2450 MHz System Validation/Zoom Scan 8 (7x7x7)/Cube 0: Measurement grid: dx=5mm, dy=5mm, dz=5mm
Reference Value = 89.4 V/m; Power Drift = -0.01 dB
Peak SAR (extrapolated) = 27.8 W/kg
SAR(1 g) = 12.7 mW/g; SAR(10 g) = 5.88 mW/g

2450 MHz System Validation/Zoom Scan 9 (7x7x7)/Cube 0: Measurement grid: dx=5mm, dy=5mm, dz=5mm
Reference Value = 89.3 V/m; Power Drift = -0.00 dB
Peak SAR (extrapolated) = 27.6 W/kg
SAR(1 g) = 12.6 mW/g; SAR(10 g) = 5.87 mW/g

2450 MHz System Validation/Zoom Scan 10 (7x7x7)/Cube 0: Measurement grid: dx=5mm, dy=5mm, dz=5mm
Reference Value = 89.6 V/m; Power Drift = -0.025 dB
Peak SAR (extrapolated) = 27.7 W/kg
SAR(1 g) = 12.7 mW/g; SAR(10 g) = 5.88 mW/g

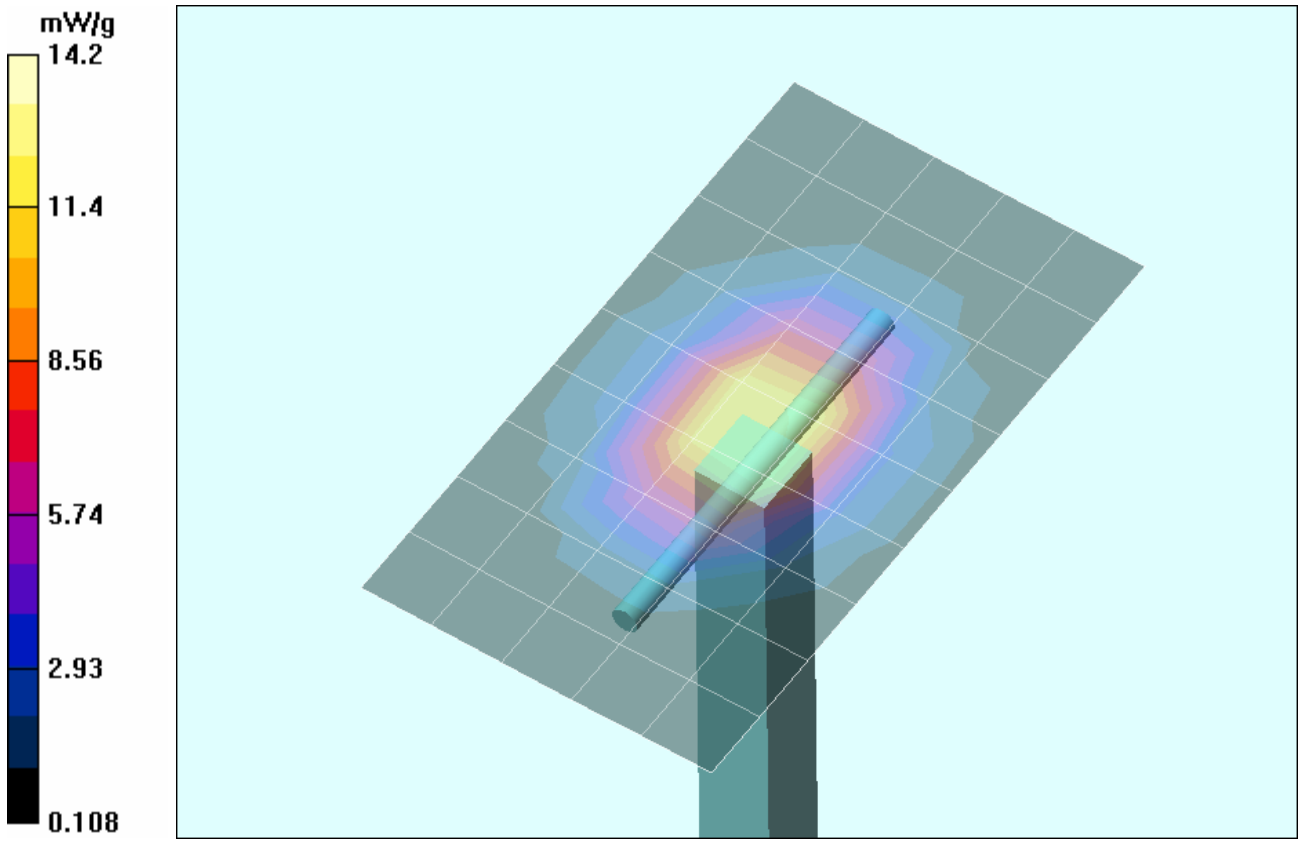

1 g average of 10 measurements: 12.63 mW/g
10 g average of 10 measurements: 5.869 mW/g

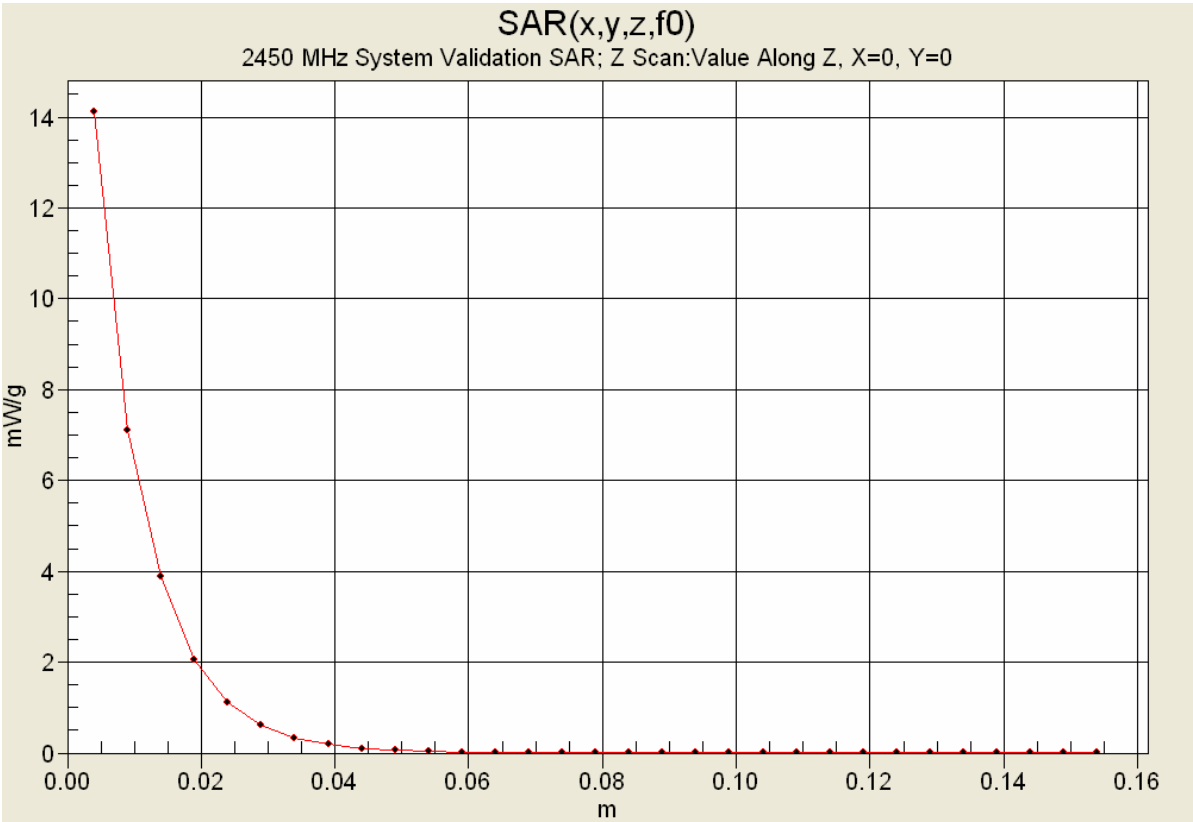

10. Measured Fluid Dielectric Parameters

System Validation - 2450 MHz Dipole

Measured Fluid Dielectric Parameters (Muscle)

April 22, 2005

Frequency	e'	e"
2.350000000 GHz	50.4884	14.1016
2.360000000 GHz	50.4542	14.1475
2.370000000 GHz	50.4295	14.1756
2.380000000 GHz	50.4094	14.2063
2.390000000 GHz	50.3750	14.2541
2.400000000 GHz	50.3395	14.2965
2.410000000 GHz	50.2961	14.3310
2.420000000 GHz	50.2408	14.3481
2.430000000 GHz	50.2047	14.3861
2.440000000 GHz	50.1822	14.4193
2.450000000 GHz	50.1500	14.4611
2.460000000 GHz	50.1035	14.5137
2.470000000 GHz	50.0825	14.5504
2.480000000 GHz	50.0515	14.6073
2.490000000 GHz	50.0191	14.6410
2.500000000 GHz	49.9867	14.6647
2.510000000 GHz	49.9442	14.7231
2.520000000 GHz	49.9042	14.7502
2.530000000 GHz	49.8769	14.7804
2.540000000 GHz	49.8259	14.8081
2.550000000 GHz	49.7900	14.8467

APPENDIX G - PLANAR PHANTOM CERTIFICATE OF CONFORMITY

2378 Westlake Road
Kelowna, B.C. Canada
V1Z-2V2

BARSKI INDUSTRIES (1985) LTD.

Ph. # 250-769-6848
Fax # 250-769-6334
E-mail: barskiind@shaw.ca
Web: www.bcfiberglass.com

FIBERGLASS FABRICATORS

Certificate of Conformity

Item : Flat Planar Phantom Unit # 03-01
Date: June 16, 2003
Manufacturer: Barski Industries (1985 Ltd)

Test	Requirement	Details
Shape	Compliance to geometry according to drawing	Supplied CAD drawing
Material Thickness	Compliant with the requirements	2mm +/- 0.2mm in measurement area
Material Parameters	Dielectric parameters for required frequencies Based on Dow Chemical technical data	100 MHz-5 GHz Relative permittivity<5 Loss Tangent<0.05

Conformity

Based on the above information, we certify this product to be compliant to the requirements specified.

Signature: _____

Daniel Chailler

Fiberglass Planar Phantom - Top View

Fiberglass Planar Phantom - Front View

Fiberglass Planar Phantom - Back View

Fiberglass Planar Phantom - Bottom View

2003 Celltech Labs Inc.

Dimensions of Fiberglass Planar Phantom

(Manufactured by Barski Industries Ltd. - Unit# 03-01)

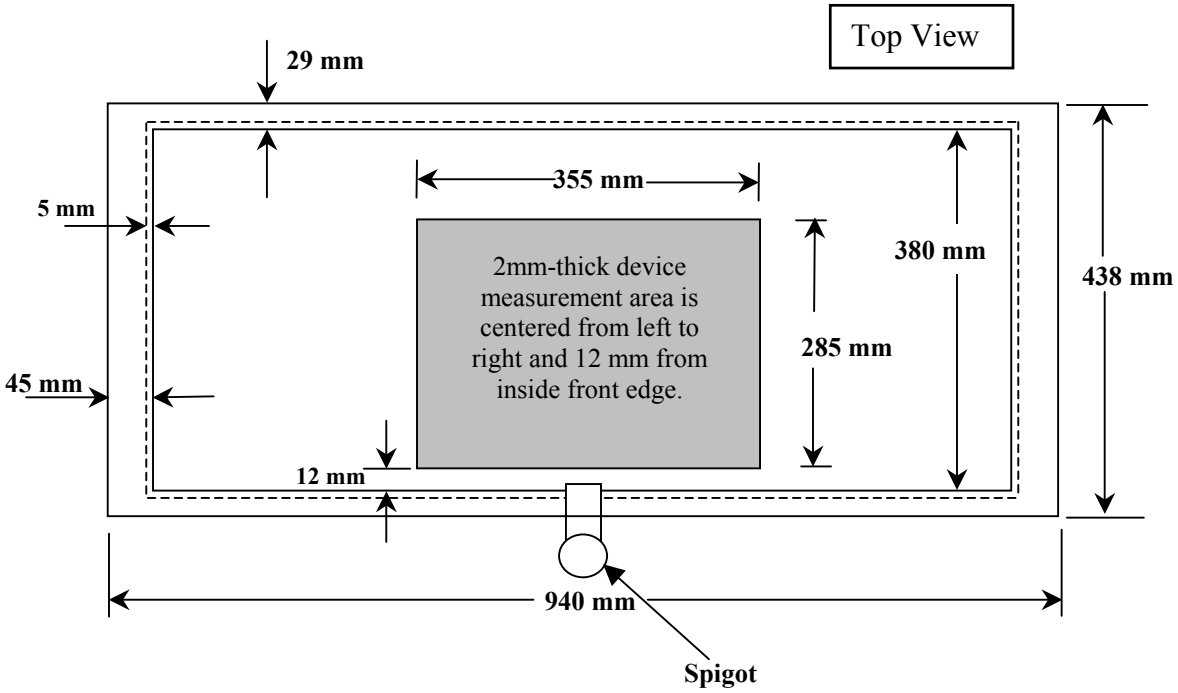

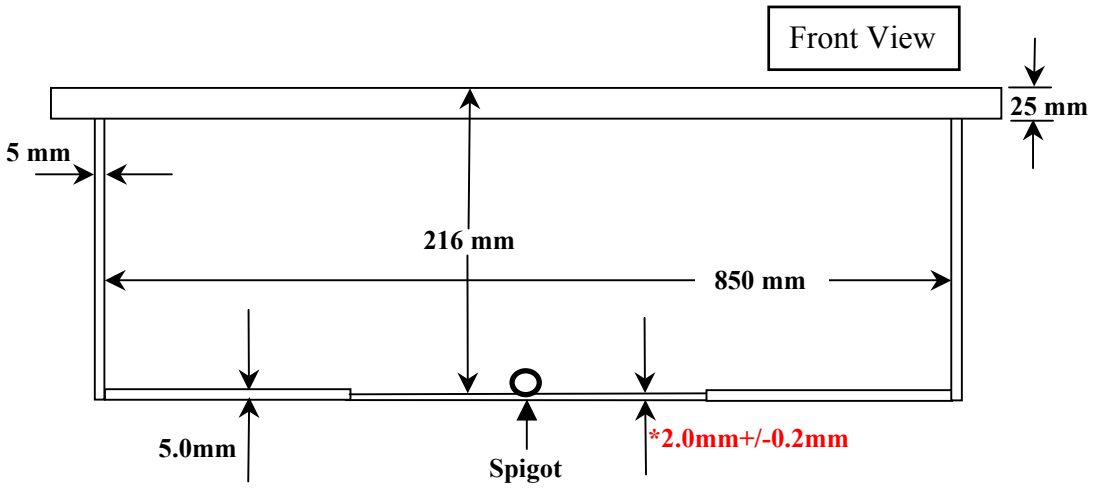

Note: Measurements that aren't repeated for the opposite sides are the same as the side measured. This drawing is not to scale.

2003 Celltech Labs Inc.