Honeywell

Thor™ VM2WG

Vehicle-Mount Computer

Microsoft® Windows® Embedded Standard Operating System

User's Guide

Disclaimer

Honeywell International Inc. (“HII”) reserves the right to make changes in specifications and other information contained in this document without prior notice, and the reader should in all cases consult HII to determine whether any such changes have been made. The information in this publication does not represent a commitment on the part of HII.

HII shall not be liable for technical or editorial errors or omissions contained herein; nor for incidental or consequential damages resulting from the furnishing, performance, or use of this material.

This document contains proprietary information that is protected by copyright. All rights are reserved. No part of this document may be photocopied, reproduced, or translated into another language without the prior written consent of HII.

© 2012-2013 Honeywell International Inc. All rights reserved.

Web Address: www.honeywellaidc.com

RFTerm is a trademark or registered trademark of EMS Technologies, Inc. in the United States and/or other countries.

Microsoft® Windows, ActiveSync®, MSN, Outlook®, Windows Mobile®, the Windows logo, and Windows Media are registered trademarks or trademarks of Microsoft Corporation.

Intel® and Atom™ are trademarks or registered trademarks of Intel Corporation or its subsidiaries in the United States and other countries.

Summit Data Communications, the Laird Technologies Logo, the Summit logo, and "Connected. No Matter What" are trademarks of Laird Technologies, Inc.

The Bluetooth® word mark and logos are owned by the Bluetooth SIG, Inc.

Symbol® is a registered trademark of Symbol Technologies. MOTOROLA, MOTO, MOTOROLA SOLUTIONS and the Stylized M Logo are trademarks or registered trademarks of Motorola Trademark Holdings, LLC and are used under license.

RAM® and RAM Mount™ are both trademarks of National Products Inc., 1205 S. Orr Street, Seattle, WA 98108.

Freefloat, Freefloat Link*One and Freefloat Access*One are trademarks of Freefloat, Mölndalsvägen 30B, SE-412 63Gothenburg, Sweden.

Qualcomm® is a registered trademark of Qualcomm Incorporated. Gobi is a trademark of Qualcomm Incorporated.

OneClick Internet is WebToGo’s patented connection manager customized for Honeywell mobile devices. OneClick Internet documentation is copyright 2010 by WebToGo and modified by Honeywell with WebToGo’s express permission.

Verizon® is a registered trademark of Verizon Trademark Services LLC.

T-MOBILE® is a registered trademark of Deutsche Telekom AG.

AT&T® is a registered trademark of AT&T Intellectual Property.

PenMount, and the Pen Mount logo are registered trademarks of Salt International Corporation, Taipei, Taiwan, R.O.C.

Acrobat® Reader © 2013 with express permission from Adobe Systems Incorporated.

Other product names or marks mentioned in this document may be trademarks or registered trademarks of other companies and are the property of their respective owners.

Patents

For patent information, please refer to www.honeywellaidc.com/patents.

Limited Warranty

Refer to www.honeywellaidc.com/warranty_information for your product’s warranty information.

Table of Contents

Chapter 1 - Introduction 1-1

About this Guide 1-1

Components 1-2

Front View 1-2

Back View Quick Mount Smart Dock 1-3

Access Panels 1-3

Keyboard Options 1-4

Integrated Keypad 1-4

Blue Key 1-4

Orange Key 1-5

95-Key External Keyboard 1-6

Keyboard Backlight 1-6

USB Keyboard / Mouse 1-6

Chapter 2 - Set Up A New Thor VM2WG 2-1

Hardware Setup 2-1

Software Setup 2-1

Quick Mount Smart Dock 2-2

Preparing the Dock 2-3

Place the Thor VM2WG in the Dock 2-4

Removing the Thor VM2WG from the Dock 2-4

Backlights and Indicators 2-5

Display Backlight 2-5

Power Management 2-5

Backlight Brightness 2-5

Screen Blanking 2-5

Keypad Backlight 2-5

LED Functions 2-6

System LEDs 2-7

SYS (System Status) LED 2-7

UPS Status LED 2-8

Charge Level 2-8

Charging State 2-8

SSD (Solid State Drive) LED 2-8

Connection LEDs 2-9

WWAN LED 2-9

WiFi LED 2-9

Bluetooth LED 2-9

Keyboard LEDs 2-10

Blue LED 2-10
Orange LED 2-10
Programmable LED 2-10
Power Up 2-11
Tapping the Touch Screen with a Stylus 2-12
Thor VM2WG Configuration Options 2-13
Date and Time 2-13
Power Management 2-13
Speaker Volume 2-13
Connect Bluetooth Devices 2-13
Restart/Shutdown 2-14
Calibrate Touch Screen 2-14
Touch Screen 2-15
Apply the Touch Screen Protective Film 2-15
Installation 2-15
Removal 2-16
Setup Terminal Emulation Parameters 2-17
Cleaning the Touch Screen 2-18
Startup Help 2-19
Chapter 3 - Connecting Cables to the Thor VM2WG 3-1
Connect External Keyboard 3-1
Connect Cable - USB Host 3-2
Connect Cable - Serial 3-3
Connect a Tethered Scanner 3-3
Connecting an AC/DC Power Supply 3-4
Connecting the Headset Cable 3-5
Adjust Headset / Microphone and Secure Cable 3-6
Connecting Vehicle Power 3-7
Vehicle 10-60VDC Power Connection 3-7
Connect Vehicle 10-60VDC 3-8
Ignition Control 3-9
Auto-On Control 3-10
Manual Control 3-11
VX6 / VX7 Adapter Cable 3-12
Vehicle 72-144VDC Power Connection 3-13
Connect Vehicle 72-144VDC 3-14
Wiring Diagram 3-15
Thor VM2WG Screen Blanking 3-16
Screen Blanking Box 3-17

Screen Blanking with Switch 3-18
Fuse 3-19
Chapter 4 - Product Agency Compliance - Thor VM2WG 4-1
Lithium Battery Safety Statement 4-5
Vehicle Power Supply Connection Safety Statement 4-7
Chapter 5 - Technical Assistance 5-1

Chapter 1 - Introduction

The Honeywell Thor VM2WG Vehicle Mount Computer (VMC) is a rugged, vehicle mounted computer running a Microsoft Windows®Embedded Standard operating system and capable of wireless data communications from a fork-lift truck or any properly configured vehicle.

The optional Bluetooth® module supports Honeywell Bluetooth printers and scanners. The Thor VM2WG provides the power and functionality of a desktop computer in a vehicle mounted unit, with a wide range of options.

The Thor VM2WG is designed for use with a vehicle Quick Mount Smart Dock. The dock installs in the vehicle and connects to vehicle power. The dock provides conditioned input power for the Thor VM2WG. Peripheral connections are on the dock. The Thor VM2WG is designed to easily be removed from the dock with a latch on the lower rear of the Thor VM2WG housing. Since the dock remains attached to the vehicle, the Thor VM2WG computer can easily be moved from one vehicle equipped with a Quick Mount Smart Dock to another vehicle equipped with a Quick Mount Smart Dock.

The Thor VM2WG contains a UPS battery which, when fully charged, can power the Thor VM2WG for a minimum of 30 minutes. This can be when the Thor VM2WG is not attached to a Quick Mount Smart Dock or when the Thor VM2WG is attached to a dock but the vehicle power is interrupted, such as when the vehicle battery is being changed.

About this Guide

This Thor VM2WG User's Guide provides instruction for the end-user or system administrator to follow when setting up a new Thor VM2WG.

This user's guide has been developed for a Thor VM2WG with a Microsoft® Windows® Embedded Standard operating system.

Components

Front View

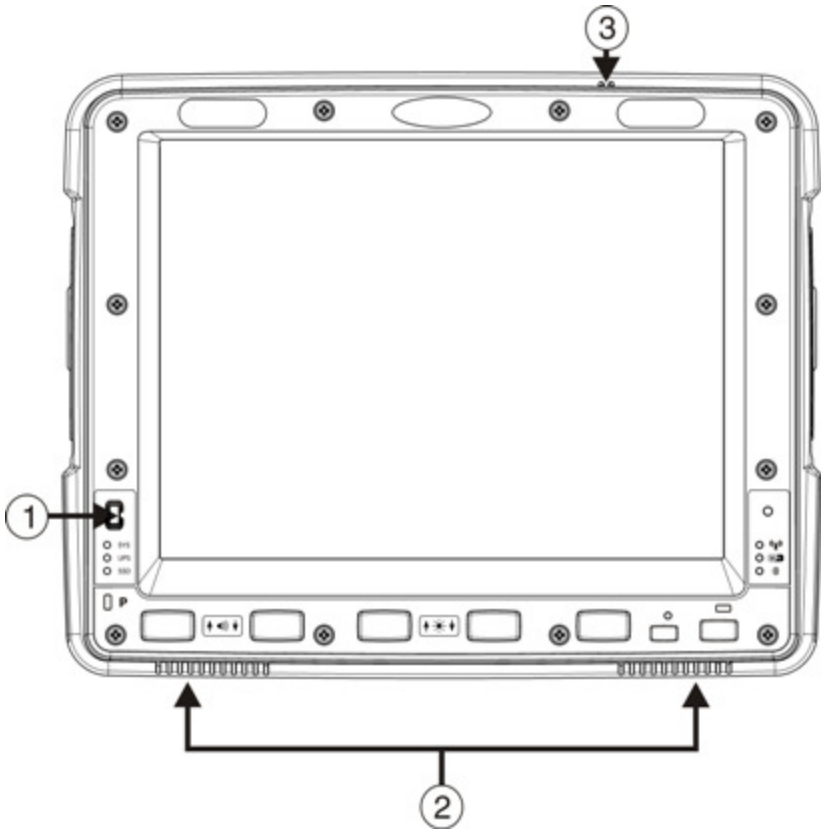

1. Power Button
2. Speakers
3. Microphone

Back View Quick Mount Smart Dock

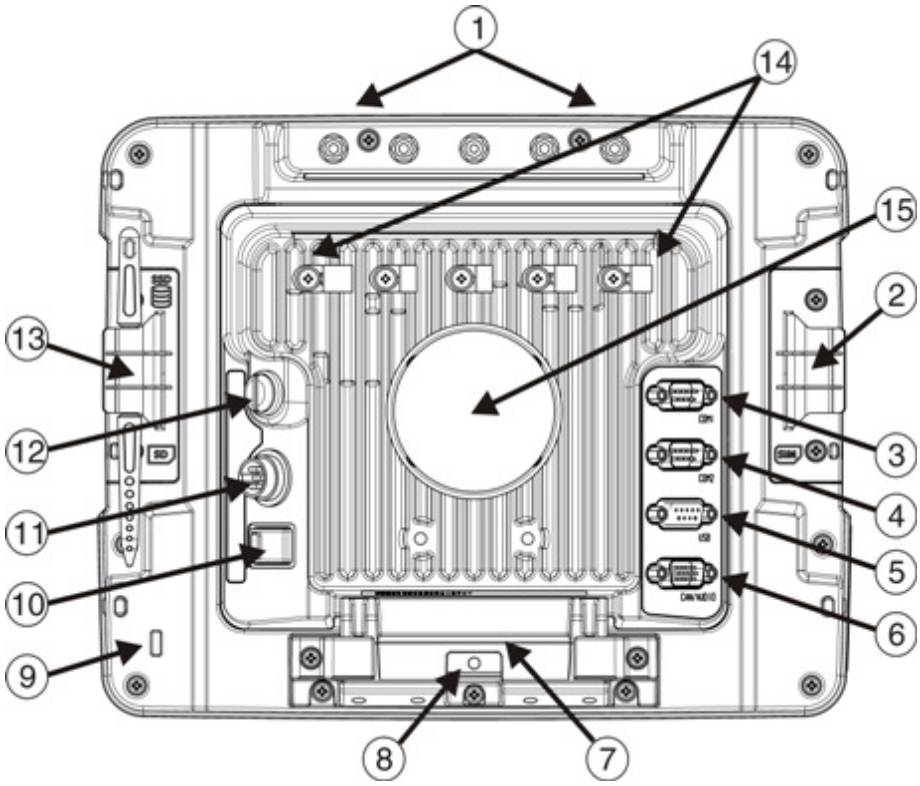

1. Antenna Connectors (on Thor VM2WG)
2. SIM card Access Panel (on Thor VM2WG)
3. COM1 Connector (on Dock)
4. COM2 Connector (on Dock)
5. USB Connector (on Dock)
6. CAN/Audio Connector (on Dock)
7. Quick Release Handle (On Thor VM2WG)
8. Provision for Padlock (on Thor VM2WG)
9. Provision for Laptop Security Cable (on Thor VM2WG)
10. Power Switch (on Dock)
11. Power Connector (on Dock)
12. Fuse (on Dock)
13. SD Card Access Panel (On Thor VM2WG)
14. Strain Relief Clamps (on Dock)
15. RAM Ball (on Dock)

Access Panels

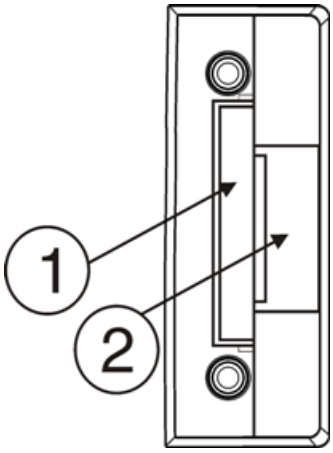

Access Panel Door is labeled with **SSD** and **SD**.

1. CompactFlash Hard Drive
2. SD (Secure Digital) Memory Card Slot

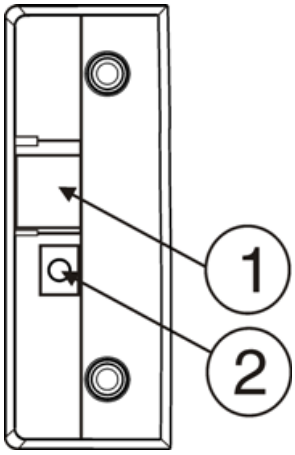

Access Panel Door is labeled with **SIM**.

1. SIM card slot for WWAN radio
2. UPS battery disconnect

Keyboard Options

The Thor VM2WG has an integrated keypad with five programmable keys and an available external keyboard.

Integrated Keypad

The integrated keypad contains five progammable keys, a blue modifier key and an orange modifier key. Press Orange plus P1-P5 to access P6-P10. The default programmable key functions are described below. Default functions may be overridden by custom settings. Consult your system administrator.

Key	Assigned Function	Key	Assigned Function
P1	F1	P6	Not assigned
P2	F2	P7	Not assigned
P3	F3	P8	Not assigned
P4	F4	P9	Not assigned
P5	F5	P10	Not assigned

Blue Key

When the Blue LED is illuminated, the programmable keys are used to adjust speaker volume and display brightness. Press the **Blue** key to enter Blue mode and then press

- **P1** to Increase speaker volume
- **P2** to Decrease speaker volume
- **P3** to Increase display brightness
- **P4** to Decrease display brightness
- No function is assigned to **P5** in Blue mode

The Blue key has a five second timeout. If the Blue key is pressed and no additional key is pressed within the five second timeout period, the Blue modifier mode is exited and the Blue LED is turned off.

When the Blue modifier key is active, the LED located next to the key is illuminated. The modifier key remains active until:

- The Blue modifier key is pressed again, or
- The Orange modifier key is pressed, or
- A five second timeout with no keypress occurs.

Orange Key

When the Orange LED is illuminated, the programmable keys provide the secondary function.

- Orange + P1 = P6
- Orange + P2 = P7, etc.

When the Orange modifier key is active, the LED located next to the key is illuminated. The modifier key remains active until:

- The Orange modifier key is pressed again, or
- A non-modifier key is pressed (i.e.: P1-P5), or
- The Blue modifier key is pressed.

95-Key External Keyboard

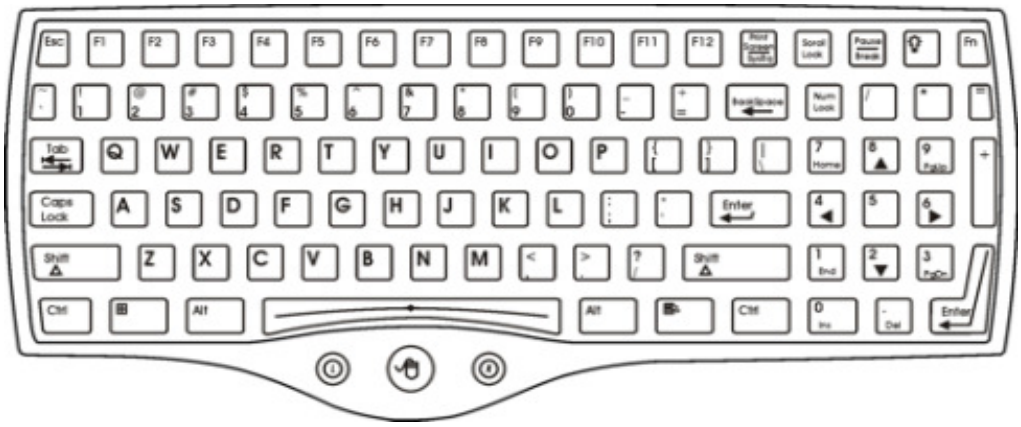

The Thor VM2WG uses an optional rugged QWERTY 95 key keyboard, designed for ease of use with the Windows CE operating system. The keyboard connects directly to the D9 USB connector on the Thor VM2WG Quick Mount Smart Dock.

- The 95 key keyboard supports all 104 keyboard functions (101 standard keyboard plus Windows keys) and includes an integrated pointing device and left and right mouse buttons. However, because the keyboard only has 95 keys, all functions are not visible (or printed on the keyboard). Therefore the keyboard supports what is called hidden keys - keys that are accessible but not visible on the keyboard.
- The 95 key keyboard keys are backlit. The keyboard backlight is manually controlled.

Keyboard Backlight

The keyboard backlight key in the top right hand corner has a light bulb icon.

The keyboard keys are backlit. The keyboard backlight is manually controlled using the backlight key in the upper right hand corner of the keyboard. Pressing the backlight key cycles the keyboard backlight through the levels of backlight intensity: Off, Low intensity, Medium intensity, Maximum intensity, Off, etc. When the Thor VM2WG is powered on, the keyboard backlight defaults to Off.

By default, the external keypad backlight turns off when the Thor VM2WG enters Standby.

USB Keyboard / Mouse

A standard USB keyboard or mouse can be attached to the Thor VM2WG using the appropriate dongle cable.

The dongle cable attaches to the Thor VM2WG and provides a USB connector. Please refer to documentation provided with the USB keyboard or mouse for more information on their operation.

Chapter 2 - Set Up A New Thor VM2WG

This page lists a quick outline of the steps you might take when setting up a new Thor VM2WG. More instruction for each step is listed later in this guide. Please refer to the *Thor VM2WG Reference Guide* for additional information and instruction.

Contact Technical Assistance if you need additional help.

Note: Installing or removing accessories should be performed on a clean, well-lit surface. When necessary, protect the work surface, the Thor VM2WG, and components from electrostatic discharge.

Caution	
⚠	Before shipping, the internal UPS battery must be disconnected. Please refer to the *Thor VM2WG Reference Guide* for details.

Hardware Setup

1. Connect accessories to the Quick Mount Smart Dock.
2. Connect cables.
3. Connect power cable to the dock.
4. Secure all cables to the dock with the Strain Relief Cable Clamps.
5. Secure the Thor VM2WG in the dock.
6. Press the power switch on the dock.
7. Press the Power key.

Software Setup

Hardware setup should be completed before starting software setup.

1. Set Date and Time
2. Set Power Management
3. Adjust Speaker Volume
4. Pair Bluetooth devices
5. Setup Wireless client parameters - Please refer to the *Thor VM2WG Reference Guide*
6. Setup terminal emulation parameters

Please refer to the *Thor VM2WG Reference Guide* for additional information and instruction.

Quick Mount Smart Dock

The Thor VM2WG assembly consists of two parts, the Thor VM2WG computer and the Quick Mount Smart Dock.

The Thor VM2WG contains an internal UPS battery that, once fully charged, powers the Thor VM2WG for a minimum of 30 minutes when the unit is not mounted in the dock.

The Dock provides:

- A mount for the Thor VM2WG computer. The Dock attaches to a vehicle via a RAM or U-bracket mount.
- Conditioned power for the Thor VM2WG. The Dock accepts 10-60VDC power input directly or 72-144VDC power input with a DC/DC converter.
- COM1 and COM2 serial connections for a tethered scanner, printer, PC connection, etc.
- USB host and client connections via an adapter cable.
- CANbus connection via an adapter cable.
- Headset connection via an adapter cable. When a headset is not attached, the microphone and speakers on the Thor VM2WG are active.
- Strain relief cable mounts.
- Mobility of the Thor VM2WG, since the Dock remains attached to the vehicle the Thor VM2WG computer can easily be moved from one vehicle equipped with a Dock to another.

External antenna connectors may be present on the back of the Thor VM2WG. The connectors may include:

- 802.11 antenna connectors, used when the Thor VM2WG is not equipped with internal antennas.
- External GPS antenna connector, when the Thor VM2WG is equipped with GPS.
- External WWAN antenna connectors, when the Thor VM2WG is equipped with WWAN.

Optional WWAN radio (available in North America, Europe, New Zealand,and Australia only).

Preparing the Dock

1. Attach RAM mount to vehicle (see *Thor VM2WG Vehicle Mounting Reference Guide*).
2. Attach accessories to dock.
3. Attach power cable, 10-60VDC or 72-144VDC.
4. If the tethered I/O port cover is in place, lift the cover to expose the I/O port on the dock. The tether allows the cover to be swung over the back of the dock.

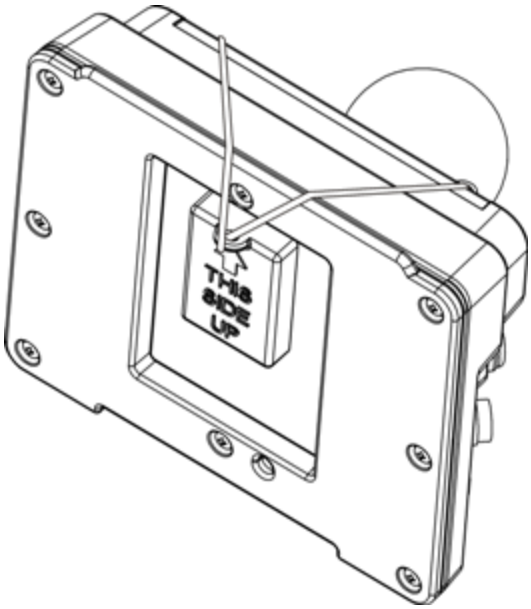

Place the Thor VM2WG in the Dock

Back of Thor VM2WG **Front of Quick Mount Smart Dock**

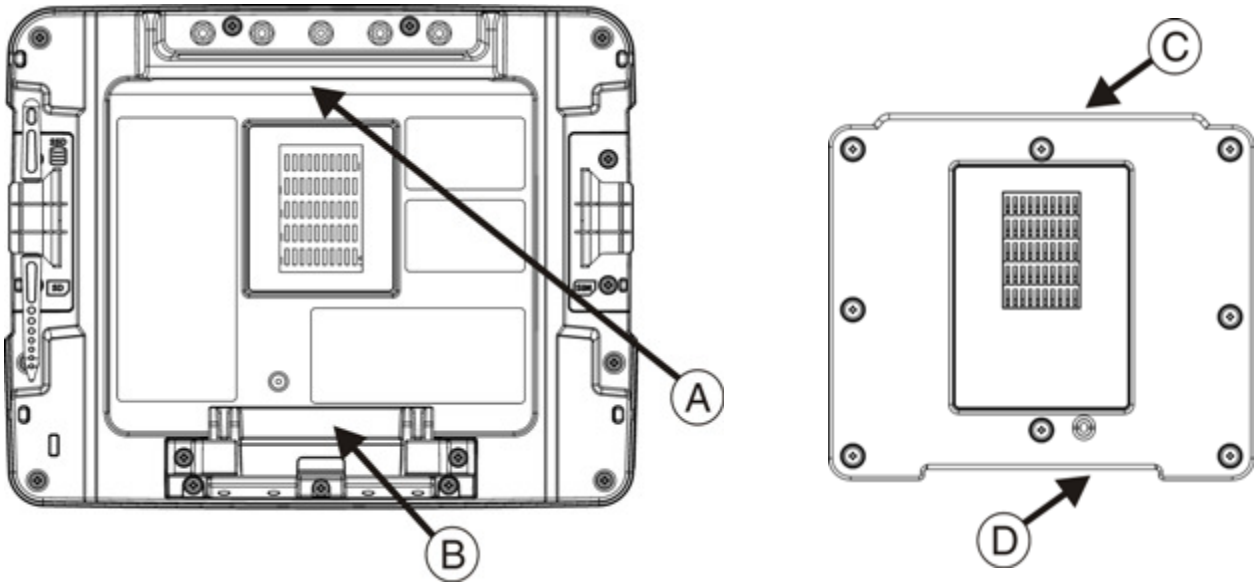

A. Notch on Thor VM2WG
B. Release lever
C. Upper Lip on Dock
D. Lower Lip on Dock

1. Locate the notch on the upper rear of the Thor VM2WG (item A above).
2. Slide this notch over the top lip (C) of the Dock. Slide the Thor VM2WG from side to side on the Dock to make sure it fully engages on the lip of the Dock. If the Thor VM2WG cannot be slid side to side, the lip is engaged.
3. Pull the quick release lever (B) on the Thor VM2WG down and push the Thor VM2WG against the Dock.
4. Release the quick release lever. The quick release lever catches the lower lip on the Dock and secures the Thor VM2WG to the Dock.
5. If necessary, adjust the viewing angle of the Thor VM2WG.

Removing the Thor VM2WG from the Dock

The Thor VM2WG may be removed from the Quick Mount for limited periods of use or the transfer from vehicle to vehicle.

The UPS battery inside the Thor VM2WG powers a fully functional Thor VM2WG for a minimum of 30 minutes.

To remove the Thor VM2WG from the Dock:

1. Pull the quick release lever (item B) downward on the back of the Thor VM2WG.
2. Pull the bottom of the Thor VM2WG away from the Dock.
3. Lift the Thor VM2WG away from the Dock.

Backlights and Indicators

Display Backlight

There are several configuration options for the Thor VM2WG display backlight:

Power Management

The display backlight is controlled by power management. When the user activity timer expires, the display backlight is turned off. Different timeouts can be set for when the Thor VM2WG is operating in the following power management schemes:

- AC/DC
- Ignition Control (ignition on)
- Ignition Control (ignition off)
- Auto-On
- UPS.

Timeouts can be specified for each scheme when operating on external power (plugged in) and when on UPS power (running on batteries).

Please refer to the *Thor VM2WG Reference Guide* for details.

The display backlight can be configured using this option:

Start > Control Panel > Power.

Backlight Brightness

The intensity of the display backlight can be manually configured:

- Press the **Blue** key to enter Blue mode
- Press the **P3** key to increase backlight brightness or the **P4** key to decrease backlight brightness.
- Press the **Blue** key to exit Blue mode.

Please refer to the **Screen Control** panel in the *Thor VM2WG Reference Guide* for the current display brightness level.

Screen Blanking

The Thor VM2WG can be configured to blank (blackout) the display while the vehicle is in motion.

Please refer to the **Screen Control** panel in the *Thor VM2WG Reference Guide* for details.

Keypad Backlight

By default, the integrated keypad backlight follows the display backlight. The integrated keypad backlight can be disabled.

The external USB keyboard backlight is manually controlled.

LED Functions

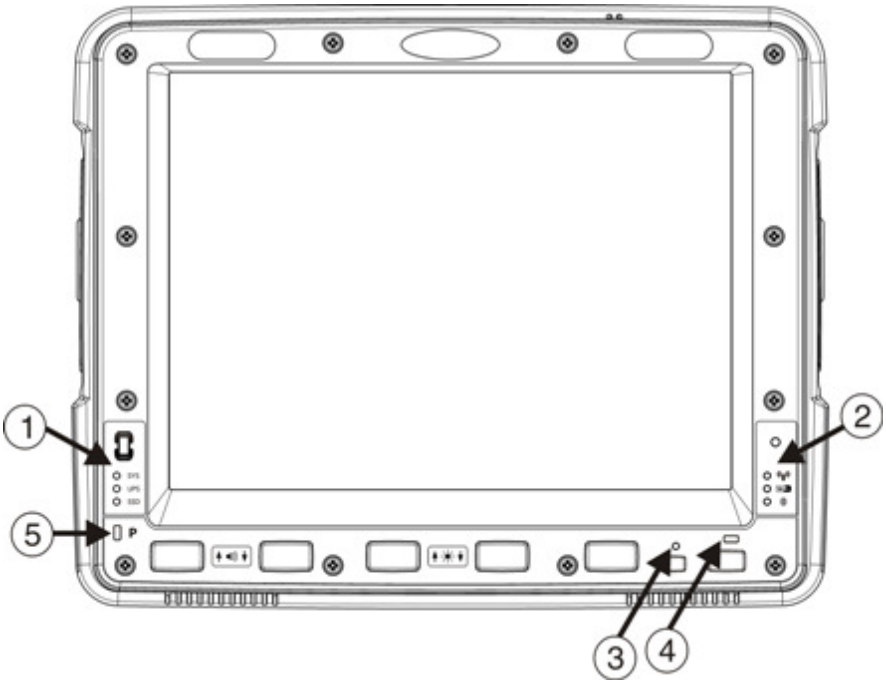

1. System LEDs
2. Connection LEDs
3. Blue LED
4. Orange LED
5. Programmable LED

System LEDs

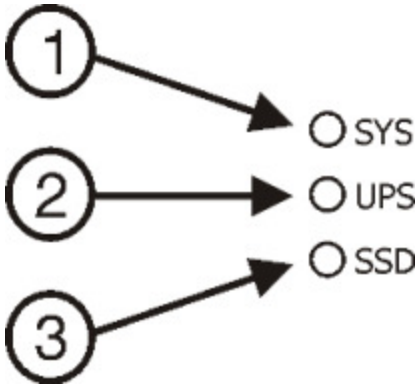

1. SYS (System Status) LED
2. UPS (Uninterruptible Power Supply) LED
3. SSD (Solid State Drive) LED

SYS (System Status) LED

LED Behavior	System State
Solid Green	• On • On but Display Off
Green blinking very slowly External power present (1/2 sec. on, 4 1/2 sec. off)	• Standby
Off External power present	• Off • Hibernate
Off External power not present	• Off, • Hibernate • Standby
Green blinking slowly External power present (1/2 sec. on, 1 1/2 sec. off)	CPU temperature less than -20ºC, Heater warming CPU for 30 sec.
Green blinking slowly External power not present (1/2 sec. on, 1 1/2 sec. off)	CPU temperature less than -20ºC, Need to move unit to warmer environment

UPS Status LED

The color of the UPS LED identifies the charge level and the behavior of the LED identifies the charging state.

Charge Level

LED Color	Status
Green	Fully charged (>90%)
Amber	• Less than fully charged, but more than 2 minutes runtime remaining, • Out of charging temperature range, • No UPS present, • Charge timeout.
Red	Low battery, less than 2 minutes runtime until shutdown

Charging State

LED Behavior	Status
Slow Blink (1 sec. on, 3 sec. off)	Charging.
Fast Blink (1/2 sec. on, 1/2 sec. off)	UPS supplying power and discharging.
On	Neither charging or discharging.
Off	Unit is off or is in Standby or Hiberbate.

SSD (Solid State Drive) LED

LED Behavior	Status
Flashing Green	SSD read or write activity.
Off	No SSD read or write activity.

Connection LEDs

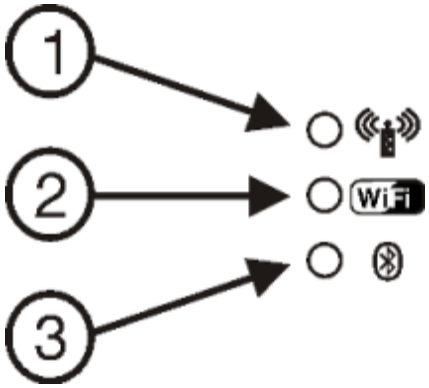

1. WWAN LED
2. WiFi LED
3. Bluetooth LED

WWAN LED

LED Behavior	Status
Solid Green	Indicates a WWAN connection to a network.
Off	Indicates no WWAN connection.

WiFi LED

LED Behavior	Status
Solid Green	Indicates a connection with an IP address to an Access Point
Off	Indicates no connection to an Access Point.

Bluetooth LED

LED Behavior	Status
Blue Blinking Slowly	Bluetooth is paired but not connected to a device.
Blue Blinking Medium	Bluetooth is paired and connected to a device.
Blue Blinking Fast	Bluetooth is discovering Bluetooth devices.
Off	Bluetooth hardware has been turned off.

Keyboard LEDs

The keyboard LEDs are located near the specified key.

Blue LED

LED Behavior	Status
Solid Blue	• Indicates the **Blue** modifier key is active. Blue modifier mode is invoked for the next keypress. • Pressing the **Blue** key a second time exits this modifier mode and turns off the LED. • Pressing the **Orange** key exits the Blue mode and turns off the Blue LED. • When Blue mode is active, keys P1 through P4 provide volume and brightness adjustment functions.
Off	Blue mode is not invoked.

Orange LED

LED Behavior	Status
Solid Orange	• Indicates the **Orange** modifier key is active. Orange mode is invoked for the next keypress only. • Pressing the **Orange** key a second time exits this modifier mode and turns off the LED. • Pressing the **Blue** key exits the Orange mode and turns off the Orange LED.
Off	Orange mode is not invoked.

Programmable LED

LED Behavior	Status
Controlled by application	Refer to application developer for LED behavior details
Off	Default mode. Refer to application developer for LED behavior details

Power Up

⚠	If a USB drive, such as a thumb drive is attached to the Thor VM2WG, the device attempts to boot from the USB drive and cannot. Please remove the USB drive and power up the Thor VM2WG again.

The Quick Mount Smart Dock has a power switch on the back.

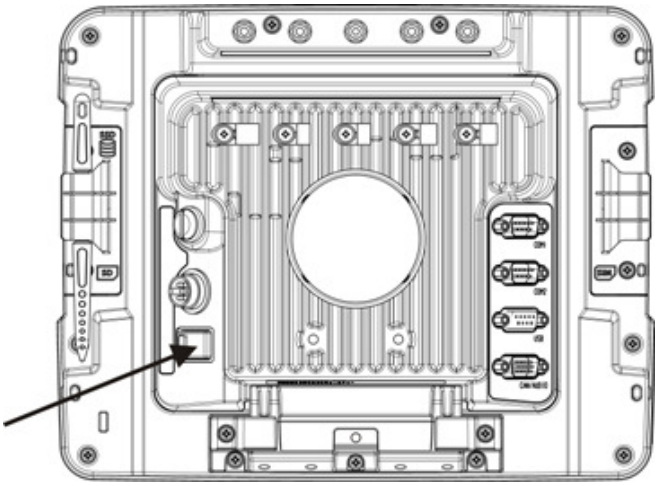

The "On" side of this rocker switch has a raised bump to allow the state of the switch to be determined when the switch may not be easily viewed, for example, after the Dock is mounted in a vehicle.

After external power has been connected and the Thor VM2WG has been mounted in the Dock, press the side of the power switch with the raised bump to pass power from the Dock to the Thor VM2WG. Generally, once the Dock is powered On, there is no need to power if Off.

Next locate the power button on the front of the Thor VM2WG.

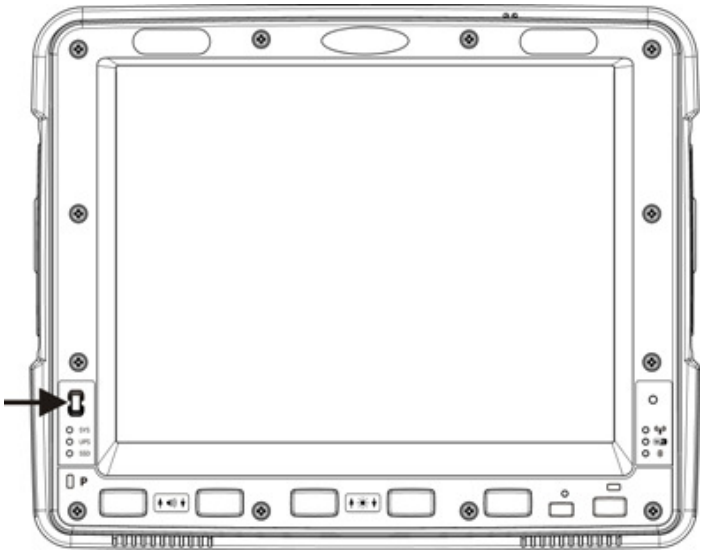

Press the power button to turn the Thor VM2WG on. When the Windows desktop is displayed or an application begins, the power up sequence is complete.

Tapping the Touch Screen with a Stylus

Note: Always use the point of the stylus for tapping or making strokes on the touch screen.

Never use an actual pen, pencil, or sharp/abrasive object to write on the touch screen.

Hold the stylus as if it were a pen or pencil. Touch an element on the screen with the tip of the stylus then remove the stylus from the screen.

Firmly press the stylus into the stylus holder when the stylus is not in use.

Using a stylus is similar to moving the mouse pointer then left-clicking icons on a desktop computer screen.

Using the stylus to tap icons on the touch screen is the basic action that can:

- Open applications
- Choose menu commands
- Select options in dialog boxes or drop-down boxes
- Drag the slider in a scroll bar
- Select text by dragging the stylus across the text
- Place the cursor in a text box prior to typing in data
- Place the cursor in a text box prior to retrieving data using a scanner/imager or an input/output device connected to a serial port.

A right-click can be simulated by touching the touch screen with the stylus and holding it for a short time.

A right click is generated by tapping the mouse icon , usually located in the upper right hand corner of the screen. After tapping, the mouse icon highlights the right button. The next touch screen tap is treated as a right click. The mouse icon returns to the left button highlighted so subsequent taps are treated as left clicks.

When a dialog box is too large for the display, tap and drag the dialog box up or down or from side to side to view the remainder of the dialog box.

Note: If the mouse icon is not displayed, this feature can be enabled by tapping the PenMount icon pm *in the System Tray. From the menu that pops up, tap the* **Right Button** *to enable the mouse icon. When this option is enabled, a checkmark is displayed in the menu.*

A stylus replacement kit is available.

Thor VM2WG Configuration Options

Many configuration options are available via the Microsoft Windows Control panel. Refer to the *Thor VM2WG Reference Guide* or For **Help and Support** on the **Start** menu for configuration details.

Date and Time

Use the Windows interface to set date, time and time zone.

- Double tap time display in System Tray
- Tap **Start > Control Panel > Date and Time** (Classic view)
- Tap **Start > Control Panel > Date, Time, Language and Regional Options > Change the Date and Time** (Category view)

Power Management

Use the Windows interface to set power management options.

- Tap **Start > Control Panel > Power Options** (Classic view)
- Tap **Start > Control Panel > Performance and Maintenance > Power Options** (Category view)

Speaker Volume

Use the Windows interface to control speaker volume.

- Double tap speaker icon in System Tray
- Tap **Start > Control Panel > Sound and Audio Devices** (Classic view)
- Tap **Start > Control Panel > Sounds, Speech and Audio Devices > Adjust the System Volume** (Category view)

Or use the Programmable keys to control speaker volume.

- Press the **Blue** key.
- Press **P1** to adjust volume up or **P2** to adjust volume down.

Connect Bluetooth Devices

Use the Windows interface to manage Bluetooth devices.

- Tap **Start > Control Panel > Bluetooth Devices** (Classic view)
- Tap **Start > Control Panel > Printers and Other Hardware > Bluetooth Devices** (Category view)

Restart/Shutdown

Use the Windows interface to restart or shut down the Thor VM2WG.

- Tap **Start > Shut Down > Restart**
- Tap **Start > Shut Down > Shut down**

Calibrate Touch Screen

To calibrate the touch screen, access the touch screen software. Select:

- Tap **Start > Programs > PenMount Universal Driver > Utility > PenMount Control Panel**. Select **PenMount 6000 USB** and then tap **Configure**. Select **Standard Calibration** or **Advance Calibration**. Advanced Calibration allows the user to select the number of calibration points. With either option, follow the on screen instructions to touch the red square, hold the touch and then lift the stylus to complete the calibration process.

Touch Screen

Apply the Touch Screen Protective Film

The Thor VM2WG touch screen protective film is shipped in packs of 10. The protective film is flexible and treated with an anti-glare coating on the outer surface.

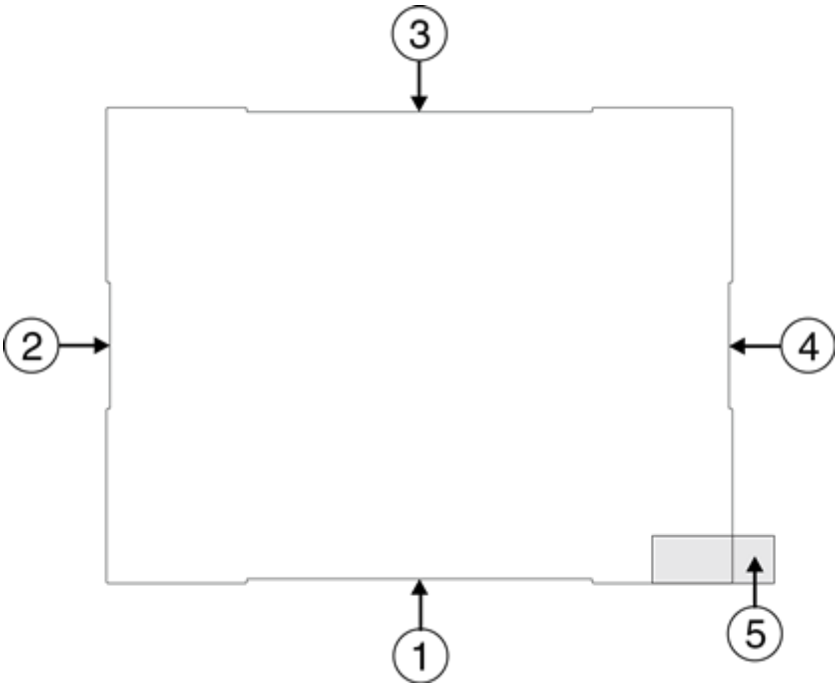

The protective film is slightly larger than the Thor VM2WG touch screen, however the notches on the edge of the protective film (indicated by arrows 1 - 4 above) correspond to the display size of the Thor VM2WG. The protective film is not adhesive. The corner edges are designed to fit between the Thor VM2WG display and the display housing to hold the protective film in place.

A protective backing is applied to the rear surface of the protective film. A pull tab (item 5 above) is attached to the protective backing for easy removal of the protective backing from the film.

Installation

1. Make sure the touch screen is clean and dry before installation. Please review Cleaning the Display for instructions on suitable cleaning agents.
2. Pull the release tab to separate the protective backing from the rear of the protective film. Avoid touching the rear side of the protective film while removing the liner.
3. Place the rear side of the protective film against the Thor VM2WG display, roughly centering the protective film over the display.
4. Slide the protective film until one corner can be slid back between the touch screen and the display housing as the protective film is re-centered on the display. It may be necessary to press the edges of the protective film against the display to ensure the entire edge slides under the display housing. It is easiest to start with one of the bottom corners.

5. Slide the protective film away from the other bottom corner. The film may bulge sligthly away from the User's Guide as it is being slid. Only slide the protective film enough so that the protective film can slide under the display housing on that corner when the protective film is returned to center.
6. Repeat with each of the top corners, sliding the protective film away from the corner just enough that the protective film can slide under the display housing when the protective film is returned to center.
7. It may be necessary to flex the protective film during the install, however use care not to flex the protective film so much that the protective film kinks.
8. Once all corners are secure under the display housing, adjust the protective film, if necessary, so it is centered on the touch screen.

Removal

1. To remove the protective film, slide the protective film in one direction until the edge clears.
2. Lift up on the edge of the protective film so it does not slide between the touch screen and display housing when the protective film is slid back to the center.
3. Repeat until all edges are free and remove the protective film.

Contact Technical Assistance about protective film packs designed specifically for your Thor VM2WG touch screen.

Setup Terminal Emulation Parameters

Before you make a host connection, you will, at a minimum, need to know:

- the alias name or IP address (Host Address) and
- the port number (Telnet Port) of the host system to properly set up your host session.

1. Make sure the mobile client network settings are configured and functional. If you are connecting over wireless LAN (802.11*x*), make sure your mobile client is communicating with the Access Point.
2. From **Start > Program**, run **RFTerm** or tap the RFTerm icon on the desktop.
3. Select **Session > Configure** from the application menu and select the "host type" that you require. This will depend on the type of host system that you are going to connect to; i.e., 3270 mainframe, AS/400 5250 server or VT host.
4. Enter the "Host Address" of the host system that you wish to connect to. This may either be a **DNS name or an IP address of the host** system.
5. Update the **telnet port number**, if your host application is configured to listen on a specific port. If not, just use the default telnet port.
6. Select **OK.**
7. Select **Session > Connect** from the application menu or tap the "Connect" button on the Tool Bar. Upon a successful connection, you should see the host application screen displayed.

To change options such as Display, Colors, Cursor, Bar Code, etc., please refer to these sections in the *RFTerm Reference Guide* for complete descriptions of these and other features.

Cleaning the Touch Screen

Note: These instructions are for components made of glass. If there is a removable protective film sheet on the display, remove the film sheet before cleaning the screen.

Keep fingers and rough or sharp objects away from the bar code reader scanning aperture and the mobile device touch screen.

If the glass becomes soiled or smudged, clean only with a standard household cleaner such as Windex® without vinegar or use Isopropyl Alcohol. Dampen the cloth with the cleaner and then wipe the surface.

Do not use paper towels or harsh-chemical-based cleaning fluids since they may result in damage to the glass surface. Use a clean, damp, lint-free cloth.

Do not scrub optical surfaces. If possible, clean only those areas which are soiled. Lint and particulates can be removed with clean, filtered canned air.

Startup Help

Contact Technical Assistance if you need more help.

Touch screen is not accepting stylus taps or needs recalibration.	See Also: "Calibrate Touch Screen" when the touch screen needs recalibration, or Press Ctrl+Esc to force the Start Menu to appear. Use the tab, backtab and arrow keys to move the cursor from element to element.
Thor VM2WG seems to lockup as soon as it is rebooted.	There may be slight delays while the wireless client connects to the network, authorization for voice-enabled applications complete, and Bluetooth relationships establish or re-establish. When an application begins, the Thor VM2WG is ready for use.

Chapter 3 - Connecting Cables to the Thor VM2WG

A USB Client connection is not used on Thor VM2WG with a Windows Embedded Standard operating system.

Connect External Keyboard

The Thor VM2WG supports an optional external 95-key USB keyboard. The external keyboard has a D9 connector to connect to the USB port on the Thor VM2WG Quick Mount Smart Dock.

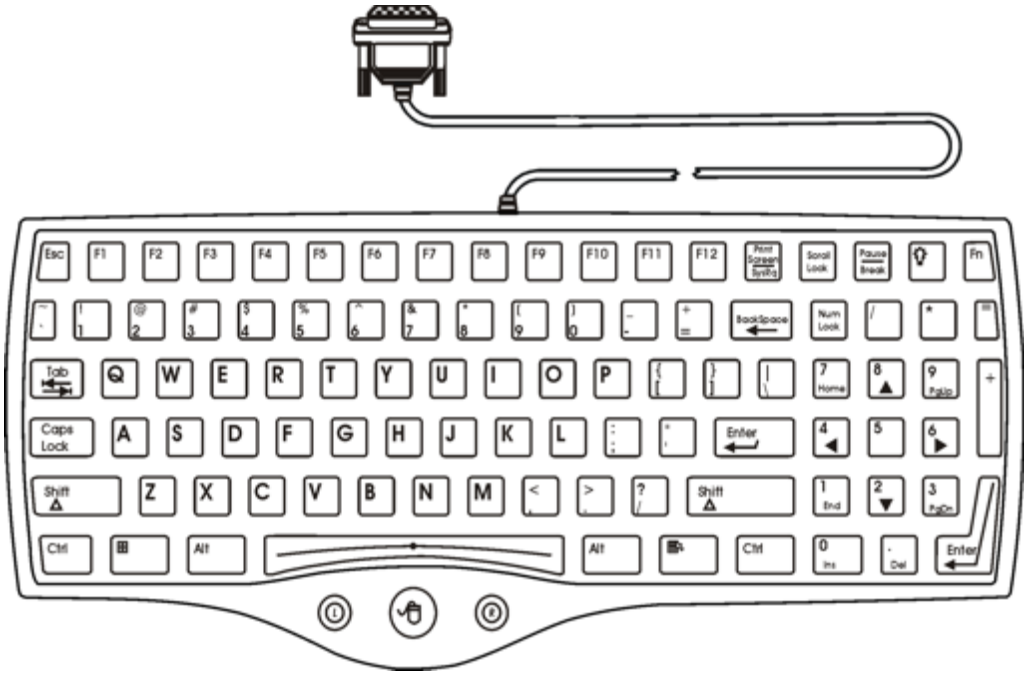

1. Seat the keyboard cable end connector over the USB connector on the Thor VM2WG Quick Mount Smart Dock.
2. Tighten the thumbscrews in a clockwise direction. Do not over tighten.

Connect Cable - USB Host

Note: A USB Client connection is not used on Thor VM2WG with a Windows Embedded Standard operating system.

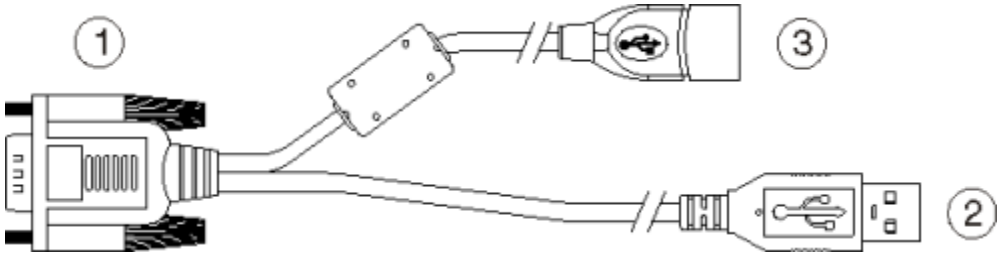

1. D9 Connector
2. USB Client Connector (not used)
3. USB Host Connector (for connecting to a USB device)

1. Seat the cable end connector (connector 1) firmly over the USB Cable Connector on the Quick Mount Smart Dock.
2. Tighten the thumbscrews in a clockwise direction. Do not over tighten.
3. Connector 3 on the cable provides a USB-Host connection. Connector 2 (USB-Client) is not used for the USB-H connection.

Connect Cable - Serial

Note: Pin 9 of the desired COM port must be configured to provide +5V or RI as needed for the connected device. See the Thor VM2WG Reference Guide for details.

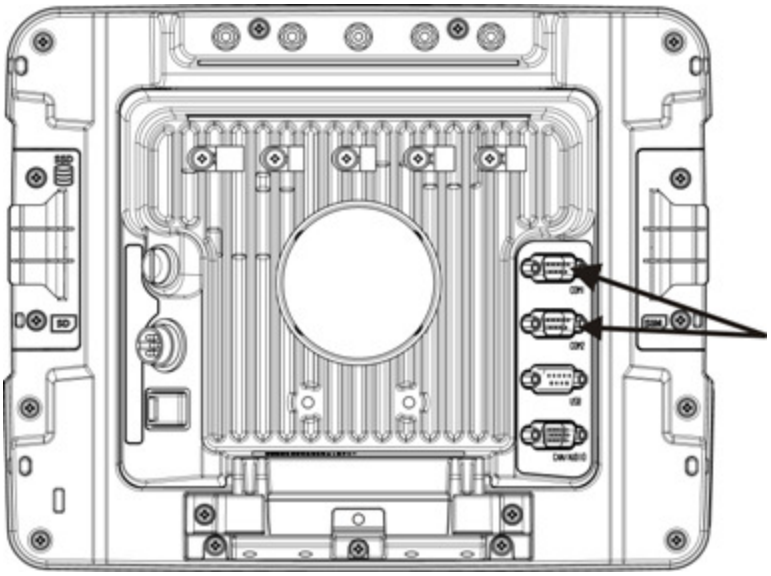

1. Seat the cable end connector firmly over the serial COM port on the Quick Mount Smart Dock.
2. Turn the thumbscrews in a clockwise direction. Do not over tighten.
3. Use a strain relief clamp to secure the cable to the Thor VM2WG.
4. Connect the other cable end to the desired serial device.

Connect a Tethered Scanner

1. The scanner cable is attached to either the COM1 or COM2 port on the Quick Mount Smart Dock.
2. Connect the serial cable for the scanner as directed above.
3. When the Thor VM2WG is powered on, it provides power to the serial scanner.

Connecting an AC/DC Power Supply

Note: The Honeywell-approved AC Power Supply and Adapter Cable are only intended for use in a 25ºC (77ºF) maximum ambient temperature environment.

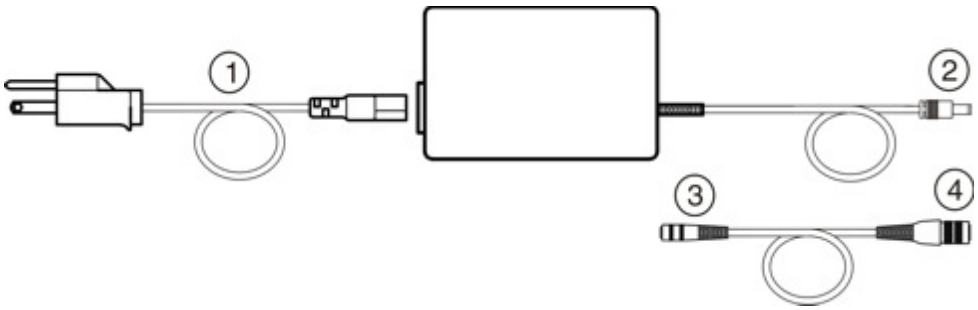

1. AC Input Cable (US only)
2. DC Output Cable
3. To DC Output Cable (see above)
4. To Thor VM2WG

In North America, this unit is intended for use with a UL Listed ITE power supply with output rated 12 – 80VDC, minimum 60W. Outside North America, this unit is intended for use with an IEC certified ITE power supply with output rated 12 – 80VDC, minimum 60W.

The external power supply may be connected to either a 120V, 60Hz supply or, outside North America, to a 230V, 50Hz supply, using the appropriate detachable cordset. In all cases, connect to a properly grounded source of supply provided with maximum 15 Amp overcurrent protection (10 Amp for 230V circuits).

1. Turn the Thor VM2WG off.
2. Connect the detachable cordset provided by Honeywell (US only, all others must provide their own cable) to the external power supply (IEC 320 connector).
3. Plug cordset into appropriate, grounded, electrical supply receptacle (AC mains).
4. Connect the DC Output Cable end to the power connector on the Thor VM2WG Quick Mount.
5. Turn the Thor VM2WG on.

Connecting the Headset Cable

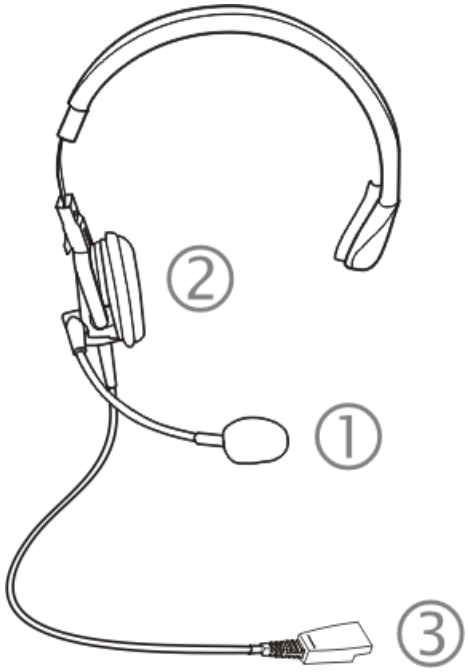

Headset

1. Microphone
2. Headphones
3. Connects to end of voice cable

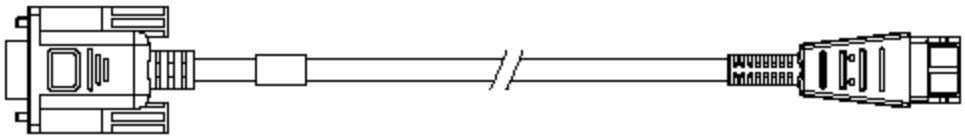

Thor VM2WG **Audio Cable**

1. Seat the D15 cable end connector firmly over the CANbus/Audio Connector on the Quick Mount Smart Dock.
2. Tighten the thumbscrews in a clockwise direction. Do not over tighten.

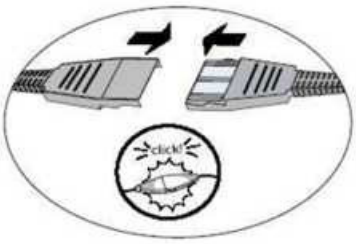

3. Slide the cable ends together until they click shut. Do not twist or bend the connectors. The Thor VM2WG internal microphone and speakers are automatically disabled when the headset is connected.

The Thor VM2WG is ready for voice-enabled applications.

Adjust Headset / Microphone and Secure Cable

The headset consists of an earpiece, a microphone, a clothing clip and a cable. The headset attaches to the audio cable end of the voice cable which attaches to the Thor VM2WG.

Align the audio connector and the headset quick connect cable end. Firmly push the cable ends together until they click and lock in place.

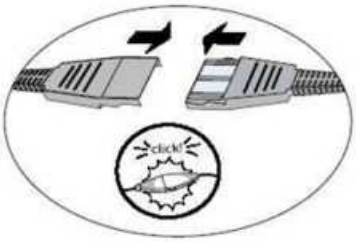

Do not twist the microphone boom when adjusting the microphone. The microphone should be adjusted to be about two finger widths from your mouth.

Make sure the microphone is pointed at your mouth. Note the small “Talk” label near the mouthpiece. Make sure the Talk label is in front of your mouth. The microphone cable can be routed over or under clothing.

Under Clothing

- Leave the cable exposed only at the top of the collar.
- Be sure to leave a small loop of cable to allow movement of your head.

Over Clothing

- Use clothing clips to hold the cable close to your body.
- Tuck the cable under the belt, but leave a small loop where it goes under the belt.
- Do not wear the cable on the front of your body. It may get in your way or get caught on protruding objects.

Connecting Vehicle Power

Complete vehicle cradle mounting and power instruction is contained in the *Thor VM2WG Vehicle Mounting Reference Guide*.

Vehicle 10-60VDC Power Connection

Caution:	For installation by trained service personnel only.
Caution:	For proper and safe installation, the input power cable must be connected to a fused circuit on the vehicle. This fused circuit requires a 10 Amp maximum time delay (slow blow) high interrupting rating fuse. If the supply connection is made directly to the battery, the fuse should be installed in the positive lead within 5 inches of the battery positive (+) terminal. Note: For North America, a UL Listed fuse is to be used.

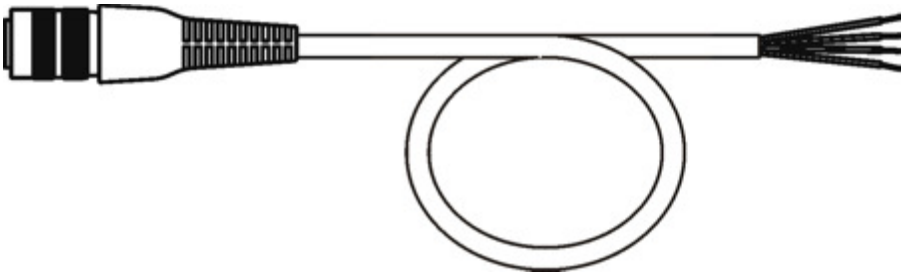

VM1054CABLE

Wire Color	Connection
Red	DC + (10-60VDC)
Black	DC -
Green	Ground
Blue	Ignition Input (optional)

Note: Correct electrical polarity is required for safe and proper installation. See the figures below for additional wire color-coding specifics.

The Thor VM2WG DC input wires (Red DC+ and Black DC-) and the Blue ignition input wire are galvanically isolated. The Green ground input is used for electrostatic discharge (ESD) protection.

Connect Vehicle 10-60VDC

1. The Thor VM2WG must not be mounted in the Quick Mount Smart Dock. The power switch on the Dock must be turned **Off**. The power cable must be UNPLUGGED from the Dock.
2. While observing the fuse requirements specified above, connect the power cable as close as possible to the actual battery terminals of the vehicle (if using unswitched power).
3. Wiring installation
   - Use proper electrical and mechanical fastening means for terminating the cable. Properly sized “crimp” type electrical terminals are an accepted method of termination. Please select electrical connectors sized for use with 20AWG (0.81mm2) conductors.
   - Refer to the diagrams following this section for wire colors and connections:
     - Ignition Control
     - Auto-On Control
     - Manual Control
     - VX6/VX7 Adapter Cable
5. Route the power cable:
   - Route the power cable the shortest way possible removing any left-over cable
   - The cable is rated for a maximum temperature of 105°C (221°F). Therefore, routing this cable it should be protected from physical damage and from surfaces that might exceed this temperature.
   - Cable should be protected from physical damage from moving parts
   - Do not expose the cable to chemicals or oil that may cause the wiring insulation to deteriorate
   - Always route the cable so that it does not interfere with safe operation and maintenance of the vehicle.
   - Provide mechanical support for the cable by securing it to the vehicle structure at approximately one foot intervals, taking care not to over tighten and pinch conductors or penetrate outer cable jacket.
5. Connect the DC power cable to the input connector on the back of the Dock.
6. Flip the power switch on the back of the Dock to On.
7. The Thor VM2WG can be installed in the Dock.
8. If using the optional screen blanking feature, install the screen blanking box or switch.

Ignition Control

Ignition wire must be connected and either Ignition Control power scheme (Ignition On or Ignition Off) can be selected. When switched vehicle power is available the Thor VM2WG ignition signal wire can be connected (less than 1mA over input voltage range) to the switched circuit to allow the Thor VM2WG to power on when the vehicle is switched on. When the vehicle is switched off, more aggressive power management settings are enabled to preserve the vehicle battery charge.

Based on the status of the vehicle ignition, the Thor VM2WG uses either the Ignition Control/Ignition On or Ignition Control/Ignition Off power scheme timeouts.

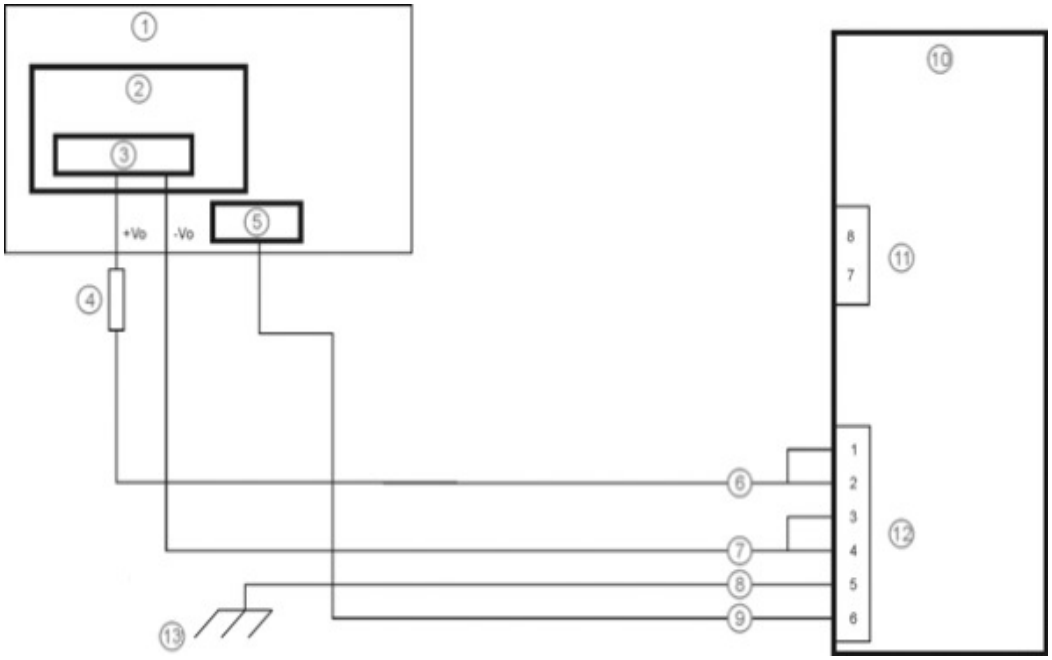

1. Existing Circuitry on Vehicle
2. Forklift Battery
3. Main Switch
4. 10A Slow blow Fuse close to power source
5. Ignition
6. Red Wire (DC +)
7. Black Wire (DC -)
8. Green Wire (Ground)
9. Blue Wire (Ignition Signal)
10. Thor VM2WG Computer in Quick Mount Smart Dock
11. COM1 or COM2 Connector on Dock
12. Circular Power Connector on Dock
13. If the vehicle chassis is not a suitable ground, connect the Green wire to the negative terminal (-Vo) of the power source.

Auto-On Control

Auto-On power scheme must be selected. The vehicle supply connections should be made to vehicle switched power to allow the terminal to automatically power-up when vehicle power is switched on or when the power switch on the back of the Dock is placed in the On position. The Ignition wire is not used and should be left disconnected.

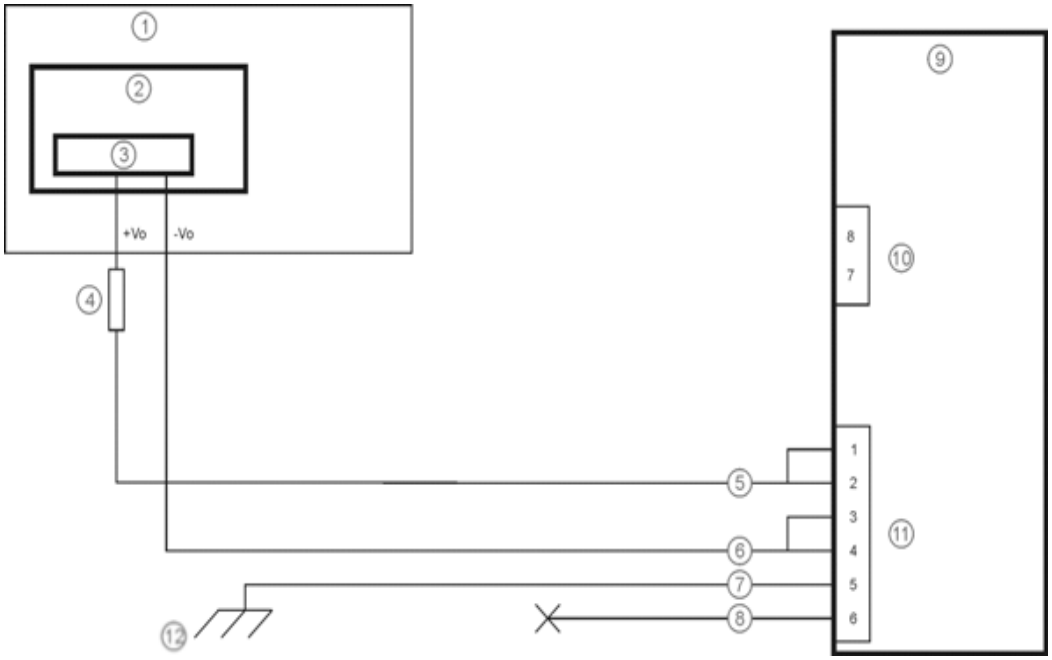

1. Existing Circuitry on Vehicle
2. Forklift Battery
3. Main Switch
4. 10A Slow blow Fuse close to power source
5. Red Wire (DC +)
6. Black Wire (DC -)
7. Green Wire (Ground)
8. Blue Wire (not connected)
9. Thor VM2WG Computer in Quick Mount Smart Dock
10. COM1 or COM2 Connector on Dock
11. Circular Power Connector on Dock
12. If the vehicle chassis is not a suitable ground, connect the Green wire to the negative terminal (-Vo) of the power source.

Manual Control

Ignition wire must be left unconnected and AC/DC power scheme must be selected.

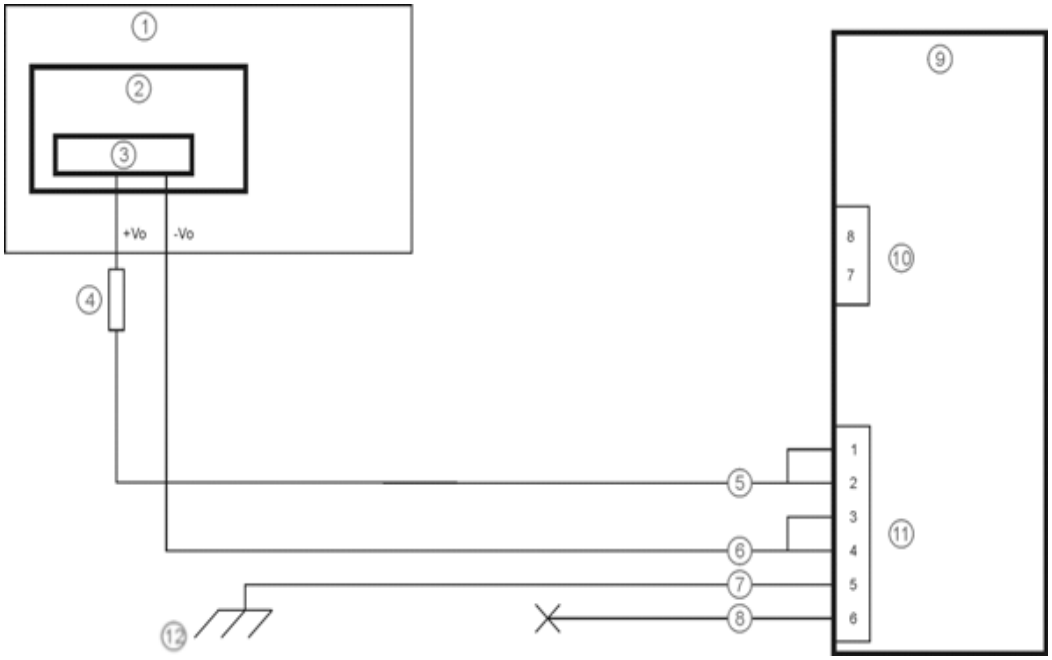

1. Existing Circuitry on Vehicle
2. Forklift Battery
3. Main Switch
4. 10A Slow blow Fuse close to power source
5. Red Wire (DC +)
6. Black Wire (DC -)
7. Green Wire (Ground)
8. Blue Wire (not connected)
9. Thor VM2WG Computer in Quick Mount Smart Dock
10. COM1 or COM2 Connector on Dock
11. Circular Power Connector on Dock
12. If the vehicle chassis is not a suitable ground, connect the Green wire to the negative terminal (-Vo) of the power source.

VX6 / VX7 Adapter Cable

An adapter cable is available to attach the Thor VM2WG to a vehicle previously equipped with a VX6/VX7 DC power cable. The adapter cable has a 5-pin connector to match with the VX6/VX7 power supply cable on one end and a 6-pin connector to match to the Thor VM2WG on the other.

1. To Thor VM2WG
2. To VX6/VX7 Power Supply Cable

Caution:	Because the Thor VM2WG supports 10-60VDC power input, verify input voltages before using this adapter cable with an existing VX6 or VX7 power connection installation.

When this adapter cable is used there is no provision for an ignition switch input. Therefore the vehicle ignition control function is not available when using this cable.

Vehicle 72-144VDC Power Connection

This option requires DC/DC external power supply Part no. VX89303PWRSPLY.

Caution:	For installation by trained service personnel only.
Caution:	For proper and safe installation, the input power cable must be connected to a fused circuit on the vehicle. This fused circuit requires a 10 Amp maximum time delay (slow blow) high interrupting rating fuse. If the supply connection is made directly to the battery, the fuse should be installed in the positive lead within 5 inches of the battery positive (+) terminal. Note: For North America, a UL Listed fuse is to be used.
Caution:	The VX89303PWRSPLY power supply is sealed per IPXX. Usage in areas where moisture can affect the power supply connections should be avoided. The power supply should be mounted in a dry location within the vehicle or placed in a suitable protective enclosure.

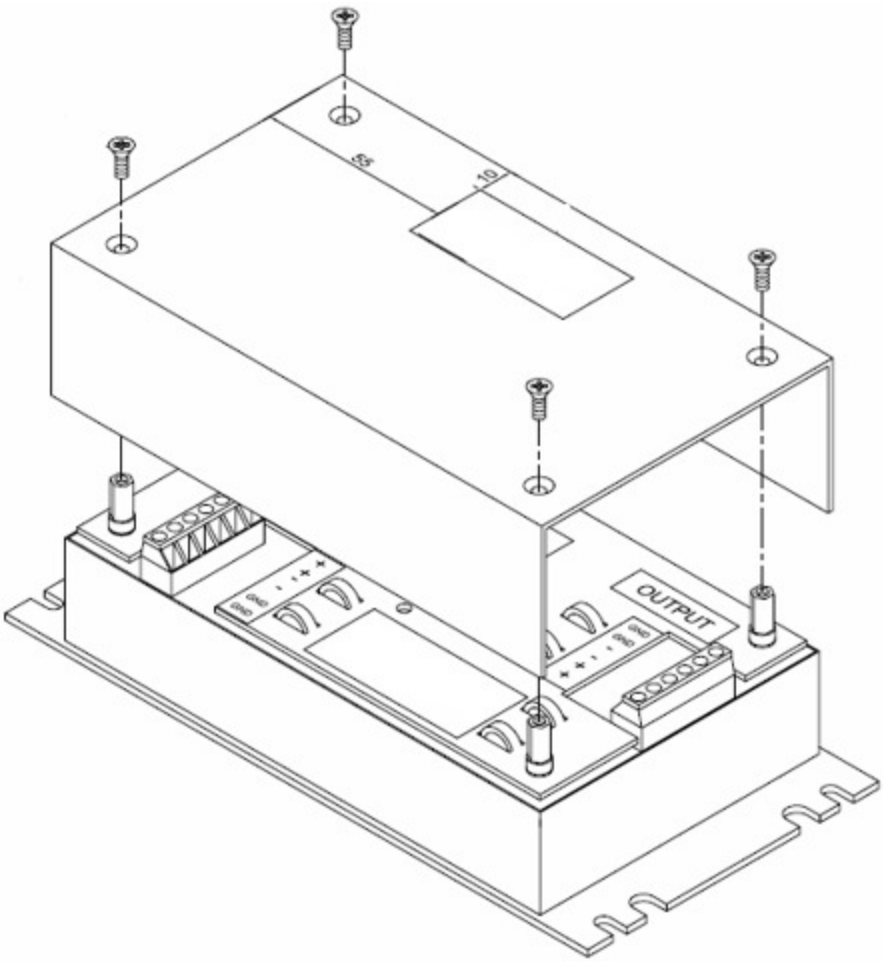

VX89303PWRSPLY

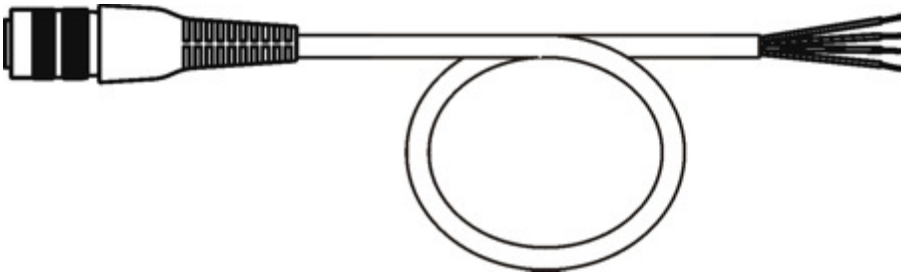

VM1054CABLE

Wire Color	Connection
Red	DC + output from DC/DC Power Supply
Black	DC - output from DC/DC Power Supply
Green	Ground output from DC/DC Power Supply
Blue	Ignition Input (not connected)

Note: Correct electrical polarity is required for safe and proper installation. See the figure below for additional wire color-coding specifics.

The Thor VM2WG DC input wires (Red DC+ and Black DC-) and the Blue ignition input wire are galvanically isolated. The Green ground input is used for electrostatic discharge (ESD) protection.

Connect Vehicle 72-144VDC

1. The Thor VM2WG must not be mounted in the Quick Mount Smart Dock. The power switch on the Dock must be turned **Off**. The power cable must be UNPLUGGED from the Dock.
2. While observing the fuse requirements specified above, connect the power cable as close as possible to the actual battery terminals of the vehicle.
3. Wiring installation:
   - The user must supply wiring from the vehicle to the DC/DC power supply.
   - Use proper electrical and mechanical fastening means for terminating the cable. Properly sized “crimp” type electrical terminals are an accepted method of termination. Please select electrical connectors sized for use with 20AWG (0.81mm2) conductors.
   - Remove the lid from the DC to DC converter. Attach the stripped wire ends to the output side of the DC to DC converter. Attach stripped wire ends to the input side of the DC to DC converter.
   - The input and output blocks each have two + and two – minus connectors. Either connector in the block can be used to connect the matching polarity wire.
   - Use the looms and wire ties to secure all wiring then reattach the cover with the screws.
   - Connect as shown in wiring diagram.
4. Route the power cable:
   - Route the power cable the shortest way possible removing any left-over cable
   - The cable is rated for a maximum temperature of 105°C (221°F). Therefore, routing this cable it should be protected from physical damage and from surfaces that might exceed this temperature.
   - Cable should be protected from physical damage from moving parts
   - Do not expose the cable to chemicals or oil that may cause the wiring insulation to deteriorate

- Always route the cable so that it does not interfere with safe operation and maintenance of the vehicle.
- Provide mechanical support for the cable by securing it to the vehicle structure at approximately one foot intervals, taking care not to over tighten and pinch conductors or penetrate outer cable jacket.

5. Connect the DC power cable to the input connector on the back of the Dock.
6. Flip the power switch on the back of the Dock to On.
7. The Thor VM2WG can be installed in the Dock.
8. If using the optional screen blanking feature, install the screen blanking box or switch.

Wiring Diagram

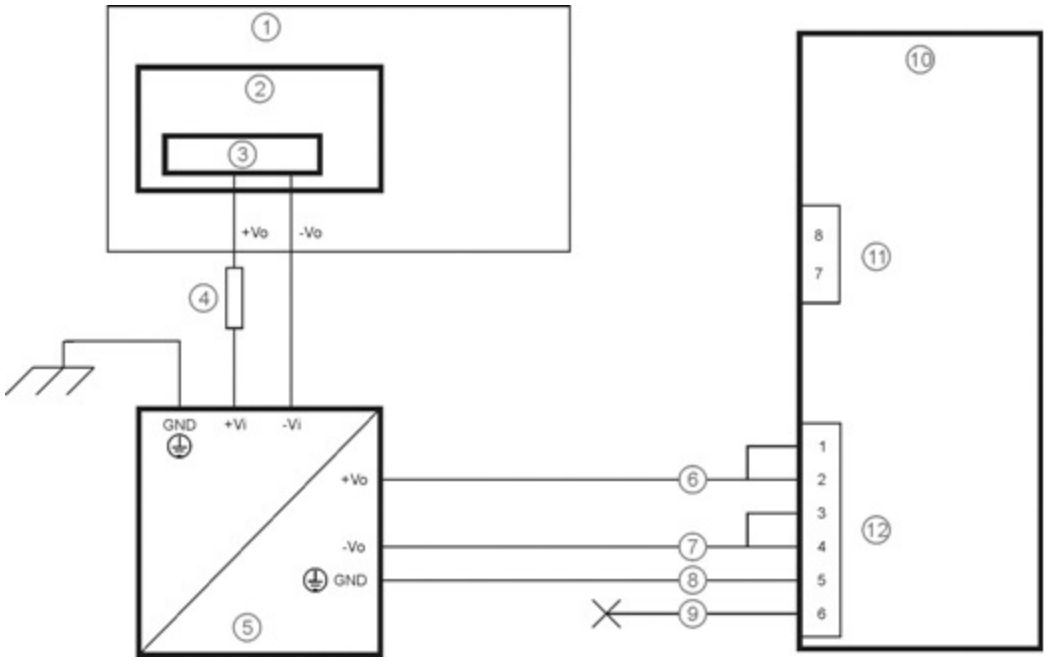

1. Existing Circuitry on Vehicle
2. Forklift Battery
3. Main Switch
4. 10A Slow blow Fuse close to power source
5. Isolated DC/DC Power Supply
6. Red Wire (DC +)
7. Black Wire (DC -)
8. Green Wire (Ground)
9. Blue Wire (not connected)
10. Thor VM2WG Computer in Quick Mount Smart Dock
11. COM1 or COM2 Connector on Dock
12. Circular Power Connector on Dock

Thor VM2WG Screen Blanking

Note: Before this process begins, the steps outlined in Power Cable Connection need to be performed for either the 10-60VDC Connection or the 72-144VDC Connection.

Caution: ⚠	For installation by trained service personnel only.
Caution: ⚠	For proper and safe installation, the input power lead to the Screen Blanking Box requires a 3 Amp maximum time delay (slow blow) high interrupting rating fuse. Note: For North America, a UL Listed fuse is to be used.

When routing any additional cables for screen blanking:

- Route the cable the shortest way possible removing any left-over cable
- Fuses and cabling are user supplied. Therefore, route these cables so they are protected from physical damage and from surfaces that might exceed the cable's rated temperature threshold.
- Cable should be protected from physical damage from moving parts
- Do not expose the cable to chemicals or oil that may cause the wiring insulation to deteriorate
- Always route the cable so that it does not interfere with safe operation and maintenance of the vehicle.
- Provide mechanical support for the cable by securing it to the vehicle structure at approximately one foot intervals, taking care not to over tighten and pinch conductors or penetrate outer cable jacket.

Screen Blanking Box

Screen Blanking Box Terminal	Connection
12-xxV	Input from vehicle motion sensing circuitry. Please refer to label on Screen Blanking Box for allowable voltage input range.
GND	DC -
	These two terminals are for a user provided serial cable. The cable must be constructed so that **Pin 7** (RTS) connects to **switched** side of the connection and **Pin 8** (CTS) connects to the **other terminal**.

Please refer to the appropriate illustration below for Screen Blanking Box wiring diagrams.

Caution:	
	Do not exceed the maximum input voltage, either 60 or 72VDC, specified on the Screen Blanking Box label when using this configuration.

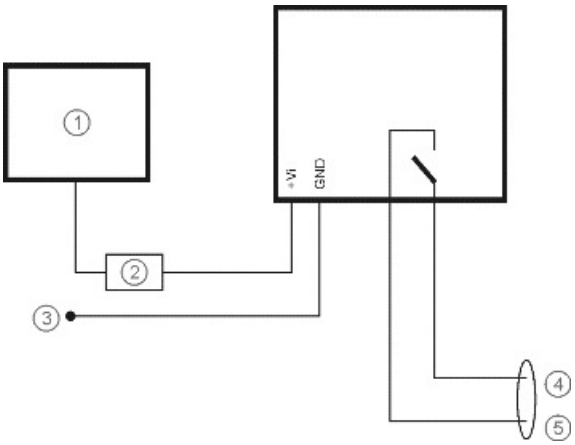

1. Motion Circuitry - The voltage at the +Vi input on the Screen Blanking Box must be between 10VDC and 60 or 72VDC (see Screen Blanking Box label) when the vehicle is in motion and less than 5VDC when the vehicle is not in motion.
2. 3 Amp Fuse
3. To -Vo on Vehicle, i.e., Negative Battery Terminal
4. To Pin 7 of COM1 or COM2 (Gray wire when using VM1080CABLE)
5. To Pin 8 of COM1 or COM2 (Black wire when using VM1080CABLE)

Screen Blanking with Switch

In applications where it is impractical to use the screen blanking box due to vehicle voltage or lack of a motion sensing signal, screen blanking can be controlled via a user supplied switch or relay that provides an electrical conductive connection on vehicle motion.

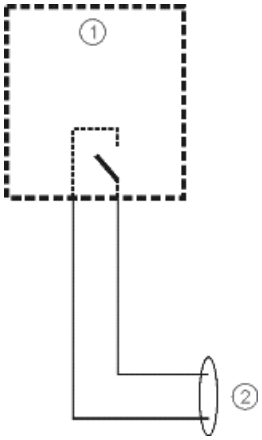

1. Switch
2. To Pins 7 and 8 of COM1 or COM2

Fuse

The Thor VM2WG uses an 8A time delay (slow blow), fuse that is externally accessible and user replaceable. The fuse is located on the back of the Quick Mount Smart Dock. The fuse is accessed by unscrewing the cap as indicated below.

Should it need replacement, replace with same size, rating and type of fuse – Littelfuse 0215008.MXP or equivalent.

Fuse has voltage on it even when power is off. Always disconnect input power before changing the fuse.

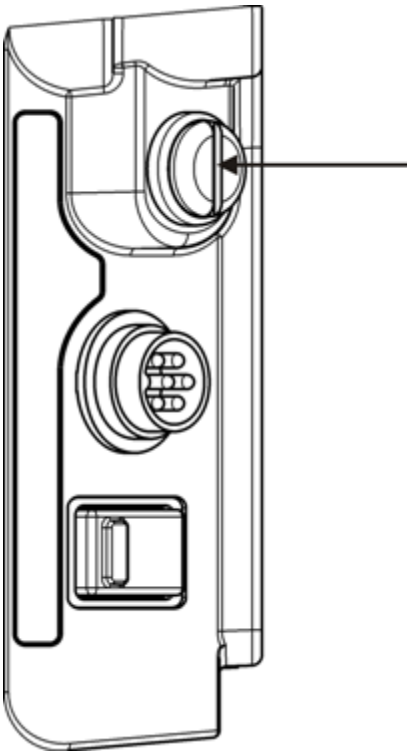

Chapter 4 - Product Agency Compliance - Thor VM2WG

Class B Digital Device

FCC Rules, Part 15

This device complies with Part 15 of the FCC Rules [and with RSS-210 of Industry Canada]. Operation is subject to the following two conditions:

1. This device may not cause harmful interference, and
2. This device must accept any interference received, including interference that may cause undesired operation.

NOTE: This equipment has been tested and found to comply with the limits for a Class B digital device, pursuant to Part 15 of the FCC Rules. These limits are designed to provide reasonable protection against harmful interference in a residential installation. This equipment generates, uses and can radiate radio frequency energy and, if not installed and used in accordance with the instructions, may cause harmful interference to radio communications. However, there is no guarantee that interference will not occur in a particular installation. If this equipment does cause harmful interference to radio or television reception, which can be determined by turning the equipment off and on, the user is encouraged to try to correct the interference by one or more of the following measures:

- Reorient or relocate the receiving antenna.
- Increase the separation between the equipment and the receiver.
- Connect the equipment into an outlet on a circuit different from that to which the receiver is connected.
- Consult the dealer or an experienced radio/TV technician for help.

Notice

Changes or modifications made to this equipment not expressly approved by Honeywell may void the FCC authorization to operate this equipment.

EMC Directive Requirements

This is a Class B product. In a domestic environment this product may cause radio interference in which case the user may be required to take adequate measures.

Canada, Industry Canada (IC) Notices

This Class B digital apparatus complies with Canadian ICES-003

This device complies with Industry Canada licence-exempt RSS standard(s). Operation is subject to the following two conditions: (1) this device may not cause interference, and (2) this device must accept any interference, including interference that may cause undesired operation of the

Exposure of humans to RF fields (RSS-102)

The computers employ low gain integral antennas that do not emit RF field in excess of Health Canada limits for the general population; consult Safety Code 6, obtainable from Health Canada's Web site at http://www.hc-sc.gc.ca/

The radiated energy from the antennas connected to the wireless adapters conforms to the IC limit of the RF exposure requirement regarding IC RSS-102, Issue 4 clause 4.1.

Canada, avis d'Industry Canada (IC)

Cet appareil numérique de classe B est conforme à la norme NMB-003.

Le présent appareil est conforme aux CNR d'Industrie Canada applicables auxappareils radio exempts de licence.L'exploitation est autorisée aux deux conditions suivantes: (1) l'appareil ne doit pas produire de brouillage, et (2) l'utilisateur de l'appareil doit accepter tout brouillage adioélectrique subi, même si le brouillage est susceptible d'en compromettre le fonctionnement.

Conformité des appareils de radiocommunication aux limites d'exposition humaine aux radiofréquences (CNR-102)

L'ordinateur utilise des antennes intégrales à faible gain qui n'émettent pas un champ électromagnétique supérieur aux normes imposées par Santé Canada pour la population. Consultez le Code de sécurité 6 sur le site Internet de Santé Canada à l'adresse suivante : http://www.hc-sc.gc.ca/

L'énergie émise par les antennes reliées aux cartes sans fil respecte la limite d'exposition aux radiofréquences telle que définie par Industrie Canada dans la clause 4.1 du document CNR-102, version 4.

ANATEL (Brazil)

Este equipamento opera em caráter secundário, isto é, não tem direito a proteção contra interferência prejudicial, mesmo de estações do mesmo tipo, e não causar interferência a sistema operando em caráter primário.

Cofetel

La operación de este equipo está sujeta a las siguientes dos condiciones: (1) es posible que este equipo o dispositivo no cause interferencia perjudicial y (2) este equipo o dispositivo debe aceptar cualquier interferencia, incluyendo la que pueda causar su operación no deseada.

Li-Ion Battery

When disposing of the Thor VM2WG UPS battery, the following precautions should be observed: The battery should be disposed of properly. The battery should not be disassembled or crushed. The battery should not be heated above 212°F (100°C) or incinerated.

RF Safety Notice

This device is intended to transmit RF energy. For protection against RF exposure to humans and in accordance with FCC rules and Industry Canada rules, this transmitter should be installed such that a minimum separation distance of at least 20 cm (7.8 in.) is maintained between the antenna and the general population. This device can only be co-located with FCC ID:TWG-SDCPE15N.

FCC 5GHz Statement

LAN devices are restricted to indoor use only in the band 5150-5250 MHz.

For the band 5600-5650 MHz, no operation is permitted.

When using IEEE 802.11a wireless LAN, this product is restricted to.indoor use, due to its operation in the 5.15- to 5.25-GHz Frequency range. The FCC requires this product to used indoors for the frequency range of 5.15 GHz to 5.25 GHz to reduce the potential for harmful interference to co-channel mobile satellite systems. High-power radar is allocated as the primary user of the 5.25- to 5.35-GHz and 5.65- to 5.85-GHz bands. These radar stations can cause interference with and/or damage to this device.

Waste Electrical and Electronic Equipment (WEEE)

Important:
This symbol is placed on the product to remind users to dispose of Waste Electrical and Electronic Equipment (WEEE) appropriately, per Directive 2002-96-EC. In most areas, this product can be recycled, reclaimed and re-used when properly discarded. Do not discard labeled units with trash. For information about proper disposal, visit www honeywellaidc com.

R&TTE Directive Requirements

This device bearing the CE marking is in compliance with the essential requirements and other relevant provisions of Directive 1999/5/EC. This device complies with the following harmonized European Standards:

Health: EN63211:2008

Safety: EN60950-1:2006 + A1:2010 + A11:2009 + A12:2011

EMC: EN301 489-1 V1.9.2:2011, EN301 489-17 V2.1.1:2009

Radio: EN300 328 V1.7.1:2006

The following CE marking is valid for EU harmonized telecommunications products.

EN300328 V1.7.1:2006
EN301893 V1.6.1:2011
EN301511 V9.0.2:2003
EN301908-1 V5.2.1:2011
EN300440-2 V1.4.1:2010
EN62311: 2008
EN301489-1 V1.9.2:2011 EN301489-3 V1.4.1:2002 EN301489-7 V1.3.1:2005 EN301489-17 V2.1.1:2009 EN301489-24 V1.5.1:2010
EN55022/EN55024: 2010

Dealer License - Republic of Singapore

Republic of Singapore - LXE Dealer License Number DA103458 complies with IDA Standards.

Lithium Battery Safety Statement

Caution: Lithium battery inside. Danger of explosion if battery is incorrectly replaced. Replace only with same or equivalent type recommended by battery manufacturer. (US)

Attention: Contient une pile de lithium. Risque d'explosion dans le cas où la pile ne serait pas correctement remplacée. Remplacer uniquement avec une pile semblable ou equivalente au type de pile recommandé par le fabricant. (FR)

Forsigtig: Indeholder lithiumbattterier. Risiko for eksplosion, hvis batteriet udskiftes forkert. Må kun udskiftes med samme eller tilsvarende type, som anbefalet af fabikanten. (DK)

Varoitus: Tämä tuote käyttää laservaloa. Skannerissa on jokin seuraavista tarroista. Lue Huomio-kohta. (FI)

Vorsicht: Enthält Lithium-Batterie. Bei unsachgemäßem Ersatz besteht Explosionsgefahr. Nur durch gleichen oder vom Hersteller empfohlenen Typ ersetzen. (DE)

Attenzione: Batteria al litio. Pericolo di esplosione qualora la batteria venga sostituita in maniera scorretta. Sostituire solo con lo stesso tipo o equivalente consigliato per il fabbricante. (IT)

Atenção: Contém pilha de lítio. Há perigo de explosão no caso de uma substituição incorreta. Substitua somente pelo mesmo tipo, ou equivalente, recomendado pelo fabricante. (PT)

Varning: Innehåller litiumbatteri. Fara för explosion om batteriet är felaktigt placerat eller av fel typ. Använd endast samma eller motsvarande typ batterier rekommenderade av tillverkaren. (SE)

Advarsel: Innmontert Lithium batteri. Eksplosjonsfare ved feil montering av batteri. Benytt kun batteri anbefalt av produsent. (NO)

Cuidado: Pila de litio adentro. Peligro de explosión si la pila se reemplaza incorrectamente. Reemplace solamente con el mismo tipo o equivalente recomendado por el fabricante. (ES)

Oppassen: Bevat Lithium-batterij. Incorrrecte plaatsing van batterij kan leiden tot explosiegevaar. Alleen vervangen door hetzelfde of door fabrikant aanbevolen gelijkwaardig type. (NL)

Lithium Battery Safety Statement, continued

Προσοχή: Υπάρχει μπαταρία από λίθιο εσωτερικά. Υπάρχει κίνδυνος έκρηξης εάν η μπαταρία αντικατασταθεί με λανθασμένο τρόπο. Αντικαταστήστε μόνο με τον ίδιο ή ισοδύναμο τύπο που συνιστάται από τον κατασκευαστή. (GR)	**주의:** 리튬 배터리 내부. 배터리가 잘못 설치되었을 경우 폭발의 위험이 있습니다. 동일한 배터리, 또는 배터리 제조업체가 권장하는 배터리로 교체하십시오. (KR)
注意: リチウム電池が入っています。間違った種類の電池を使用すると、破裂する恐れがあります。同じ電池、または電池製造元が推奨する同等の電池を使用してください。 (JP)	**小心:** 内装锂电池。如电池更换不当，则有发生爆炸的危险。只能用电池制造商推荐的相同或同等电池进行更换。 (CN)
Dikkat: İçinde lityum bataryası bulunur. Bataryanın yanlış değiştirilmesi patlama tehlikesi yaratır. Aynısıyla veya üreticinin önerdiği eşdeğer tiple değiştirin. (TR)	

Legend: Chinese – CN; Danish – DK; Dutch – NL; English – US; Finnish – FI; French- - FR; German – DE; Greek – GR; Italian – IT; Japanese – JP; Korean – KR; Norwegian – NO; Portuguese – PT; Spanish – ES; Swedish – SE; Turkish – TR.

Vehicle Power Supply Connection Safety Statement

Vehicle Power Supply Connection: If the supply connection is made directly to the battery, a 10A slow-blow fuse should be installed in the positive lead within 5 inches (12.7 cm.) of the battery positive (+) terminal. (US)

Raccordement de l'alimentation du véhicule Si l'alimentation est raccordée directement à la batterie, un fusible à action retardée de 10A doit être installé sur le câble positif à moins de 12,7 cm de la borne positive (+) de la batterie. (FR)

EL forsyning af køretøjet. Er forsyningsforbindelsen direkte tilknyttet til batteriet og og tilsluttet til den positive part indenfor 12,7 cm (+ delen). vil der være en langsom tændelse af 10 ampere. (DK)

Kytkentä ajoneuvon virtalähteeseen Jos virtaa otetaan suoraan akusta, 10 ampeerin hidas sulake on asennettava positiiviseen johtoon enintään 12 cm:n etäisyydelle akun positiivisesta (+) navasta. (FI)

Anschluss an Fahrzeugbatterie Bei direktem Anschluss an die Fahrzeugbatterie sollte eine träge 10A-Sicherung in die positive Leitung zwischengeschaltet werden, und zwar nicht weiter als ca. 13 cm von der positiven (+) Batterieklemme entfernt. (DE)

Σύνδεση Τροφοδοτικού Ισχύος Οχήματος Αν η σύνδεση του τροφοδοτικού γίνει κατευθείαν στη μπαταρία, μια ασφάλεια βραδείας τήξης των 10A θα πρέπει να τοποθετηθεί στο θετικό καλώδιο εντός 5 ιντσών (12,7 εκ.) του θετικού (+) ακροδέκτη της μπαταρίας. (GR)

Collegamento dell'alimentazione del veicolo Se il collegamento dell'alimentazione viene stabilito direttamente con la batteria, è necessario installare un fusibile ad azione lenta da 10A nel conduttore positivo a meno di 5 in. (12,7 cm) dal terminale positivo (+) della batteria. (IT)

Tilkople strømforsyningen til kjøretøyet Hvis strømforsyningen koples direkte til batteriet, skal det installeres en 10A treg sikring i den positive ledningen innen 12,7 cm fra plusspolen (+) på batteriet. (NO)

Ligação do fornecimento de corrente do veículo Se a ligação de fornecimento de corrente for ligada directamente à bateria, deve instalar-se um fusível de 10A no terminal positivo, a 12,7 cm. do terminal positivo (+) da bateria. (PT)

Conexión de suministro eléctrico para el vehículo Si el suministro eléctrico se proporciona directamente a la batería, se debe instalar un fusible de retardo de 10A en el conductor positivo, como máximo a 12,7 cm (5 pulgadas) del terminal positivo (+). (ES)

Fordonets strömförsörjningskoppling Om strömkopplingen görs direkt till batteriet, måste en 10A-säkring installeras i den positivt laddade ledningen inom 12.7 cm från batteriets pluspol (+). (SE)

Taşıt Güç Kaynağı Bağlantısı Kaynak bağlantısı doğrudan aküye yapılırsa, pozitif bağlantı kablosu üzerinde akünün pozitif (+) kutbuna 12.7 cm mesafede 10A'lık yavaş atan bir sigorta monte edilmelidir. (TR)

Legend: Danish – DK; English – US; Finnish – FI; French- - FR; German – DE; Greek – GR; Italian – IT; Norwegian – NO; Portuguese – PT; Spanish – ES; Swedish – SE; Turkish – TR.

Chapter 5 - Technical Assistance

If you need assistance installing or troubleshooting your device, please contact us by using one of the methods below:

Knowledge Base: www.hsmknowledgebase.com

Our Knowledge Base provides thousands of immediate solutions. If the Knowledge Base cannot help, our Technical Support Portal (see below) provides an easy way to report your problem or ask your question.

Technical Support Portal: www.hsmsupportportal.com

The Technical Support Portal not only allows you to report your problem, but it also provides immediate solutions to your technical issues by searching our Knowledge Base. With the Portal, you can submit and track your questions online and send and receive attachments.

Web form: www.hsmcontactsupport.com

You can contact our technical support team directly by filling out our online support form. Enter your contact details and the description of the question/problem.

Telephone: www.honeywellaidc.com/locations

For our latest contact information, please check our website at the link above.

Product Service and Repair

Honeywell International Inc. provides service for all of its products through service centers throughout the world. To obtain warranty or non-warranty service, please visit www.honeywellaidc.com and select **Support > Contact Service and Repair** to see your region's instructions on how to obtain a Return Material Authorization number (RMA #). You should do this prior to returning the product.

Limited Warranty

Honeywell International Inc. ("HII") warrants its products to be free from defects in materials and workmanship and to conform to HII's published specifications applicable to the products purchased at the time of shipment. This warranty does not cover any HII product which is (i) improperly installed or used; (ii) damaged by accident or negligence, including failure to follow the proper maintenance, service, and cleaning schedule; or (iii) damaged as a result of (A) modification or alteration by the purchaser or other party, (B) excessive voltage or current supplied to or drawn from the interface connections, (C) static electricity or electro-static discharge, (D) operation under conditions beyond the specified operating parameters, or (E) repair or service of the product by anyone other than HII or its authorized representatives.

This warranty shall extend from the time of shipment for the duration published by HII for the product at the time of purchase ("Warranty Period"). Any defective product must be returned (at purchaser's expense) during the Warranty Period to HII factory or authorized service center for inspection. No product will be accepted by HII without a Return Materials Authorization, which may be obtained by contacting HII. In the event that the product is returned to HII or its authorized service center within the Warranty Period and HII determines to its satisfaction that the product is defective due to defects in materials or workmanship, HII, at its sole option, will either repair or replace the product without charge, except for return shipping to HII.

EXCEPT AS MAY BE OTHERWISE PROVIDED BY APPLICABLE LAW, THE FOREGOING WARRANTY IS IN LIEU OF ALL OTHER COVENANTS OR WARRANTIES, EITHER EXPRESSED OR IMPLIED, ORAL OR WRITTEN, INCLUDING, WITHOUT LIMITATION, ANY IMPLIED WARRANTIES OF MERCHANTABILITY OR FITNESS FOR A PARTICULAR PURPOSE, OR NON-INFRINGEMENT.

HII'S RESPONSIBILITY AND PURCHASER'S EXCLUSIVE REMEDY UNDER THIS WARRANTY IS LIMITED TO THE REPAIR OR REPLACEMENT OF THE DEFECTIVE PRODUCT WITH NEW OR REFURBISHED PARTS. IN NO EVENT

SHALL HII BE LIABLE FOR INDIRECT, INCIDENTAL, OR CONSEQUENTIAL DAMAGES, AND, IN NO EVENT, SHALL ANY LIABILITY OF HII ARISING IN CONNECTION WITH ANY PRODUCT SOLD HEREUNDER (WHETHER SUCH LIABILITY ARISES FROM A CLAIM BASED ON CONTRACT, WARRANTY, TORT, OR OTHERWISE) EXCEED THE ACTUAL AMOUNT PAID TO HII FOR THE PRODUCT. THESE LIMITATIONS ON LIABILITY SHALL REMAIN IN FULL FORCE AND EFFECT EVEN WHEN HII MAY HAVE BEEN ADVISED OF THE POSSIBILITY OF SUCH INJURIES, LOSSES, OR DAMAGES. SOME STATES, PROVINCES, OR COUNTRIES DO NOT ALLOW THE EXCLUSION OR LIMITATIONS OF INCIDENTAL OR CONSEQUENTIAL DAMAGES, SO THE ABOVE LIMITATION OR EXCLUSION MAY NOT APPLY TO YOU.

All provisions of this Limited Warranty are separate and severable, which means that if any provision is held invalid and unenforceable, such determination shall not affect the validity of enforceability of the other provisions hereof. Use of any peripherals not provided by the manufacturer may result in damage not covered by this warranty. This includes but is not limited to: cables, power supplies, cradles, and docking stations. HII extends these warranties only to the first end-users of the products. These warranties are non-transferable.

The duration of the limited warranty for the Thor VM2WG is 1 year.

The duration of the limited warranty for the Thor VM2WG Quick Mount Smart Dock is 1 year.

The duration of the limited warranty for the Thor VM2WG Vehicle Mount Assembly is 1 year.

The duration of the limited warranty for the Thor VM2WG internal UPS battery is 1 year.

The duration of the limited warranty for the Thor VM2WG AC power supply and cables is 1 year.

The duration of the limited warranty for the Thor VM2WG DC-DC Converter is 1 year.

The duration of the limited warranty for the Thor VM2WG cables (USB, Serial, Communication, Power) is 1 year.

Honeywell Scanning & Mobility
9680 Old Bailes Road
Fort Mill, SC 29707
www.honeywellaidc.com

E-EQ-VM2WESOGWW
Rev (a)
1/13