Clean the litter box

Complete the following steps every few weeks to keep your litter box clean and raking reliably:

1

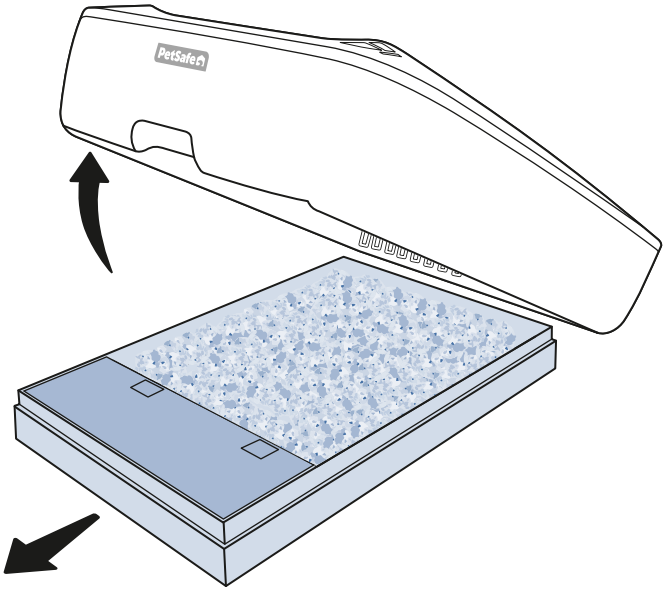

Unplug the litter box.

Lift the front of the litter box and remove the used litter tray.

Important: See the customer care guide for safety instructions related to cat litter waste and toxoplasmosis

2

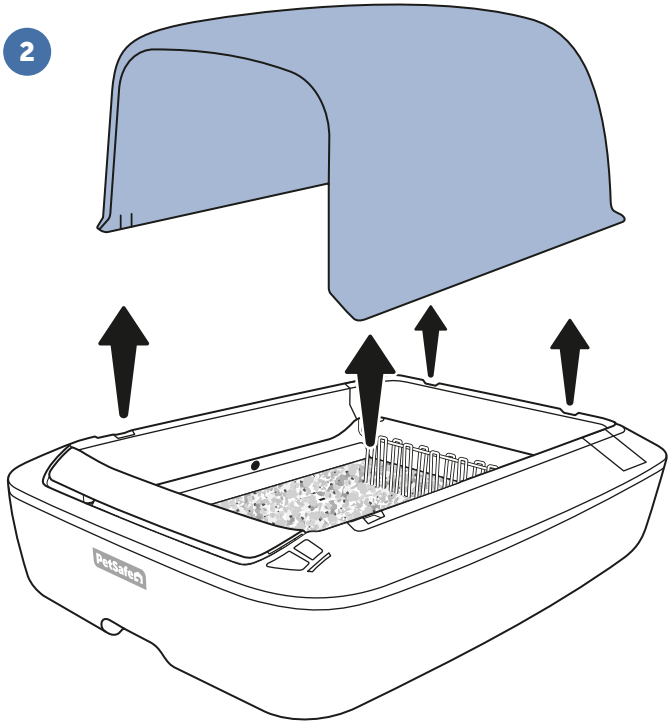

Remove the privacy cover.

3

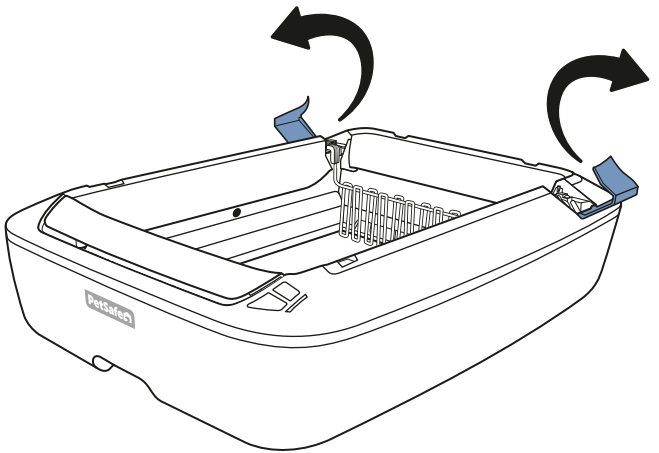

Open the rake covers.

4

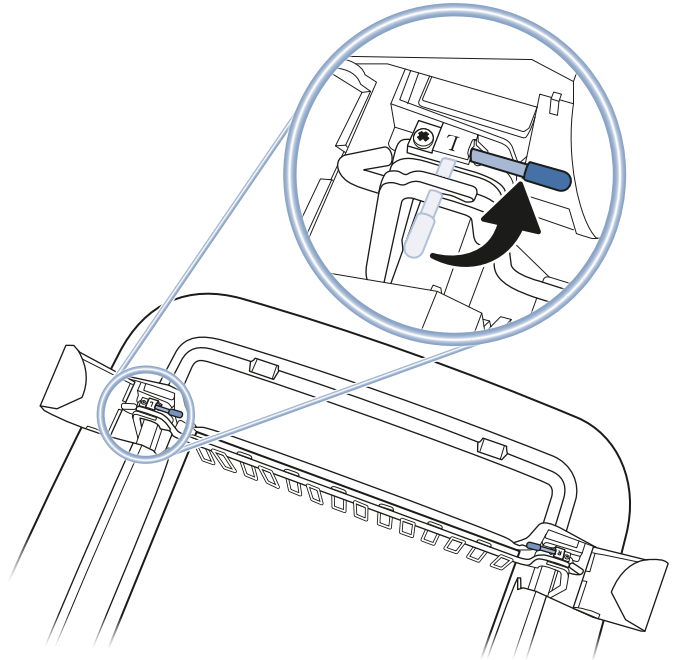

Release the rake by rotating the rake clips toward the back of the litter box.

5

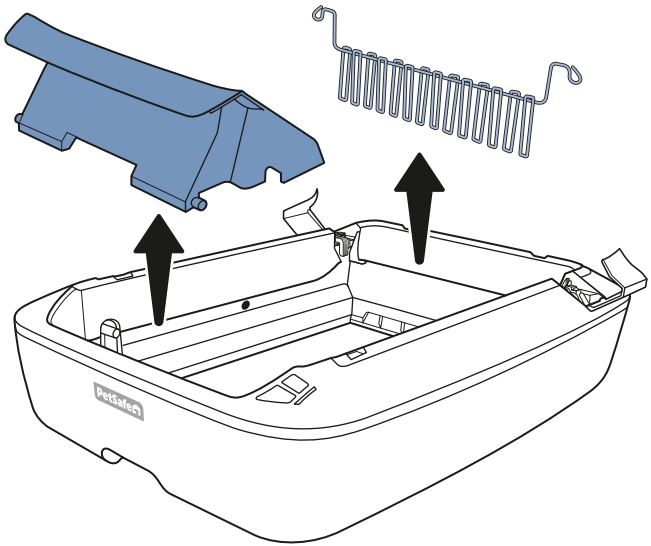

Lift the rake straight up and out of the litter box frame.

Pull straight up on the waste trap cover to remove it.

Wash the rake and waste trap cover with warm soapy water and then dry thoroughly.

6

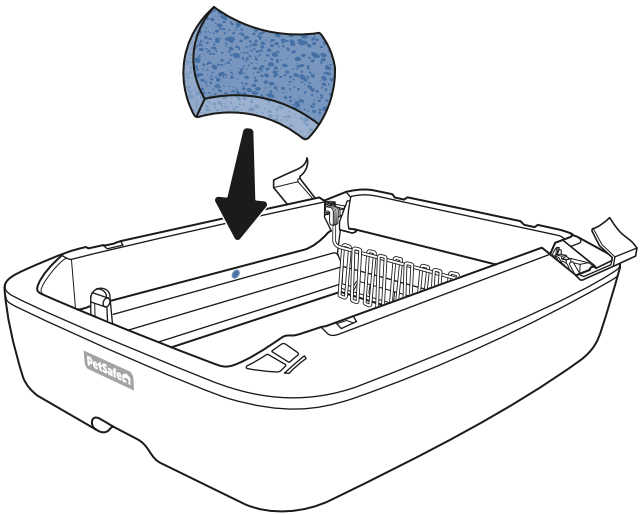

Using a cloth or sponge, mild soap, and water, wipe all surfaces of the litter box frame. Make sure the sensors inside the litter box frame are clean and unobstructed.

Important: Do not use bleach or chemicals to clean; the odor may repel your cat.

Thoroughly dry all parts.

7

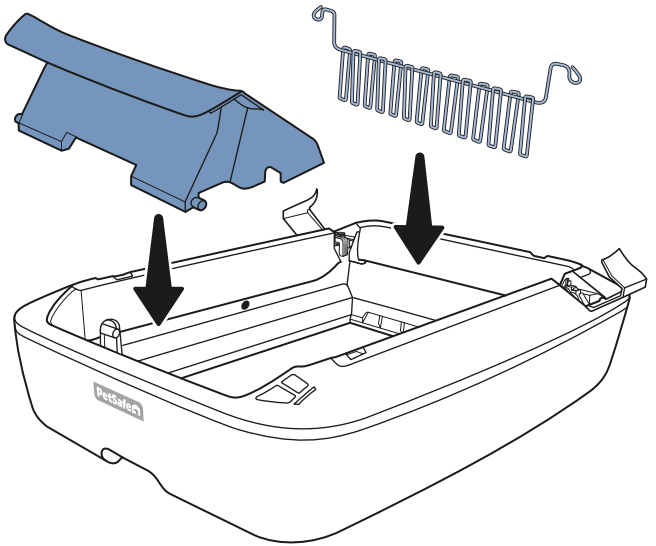

Once all litter box parts are dry, reassemble the litter box.

Replace the waste trap cover by inserting the posts on the underside of the waste trap cover into the notches inside the front of the litter box frame.

Replace the rake.

8

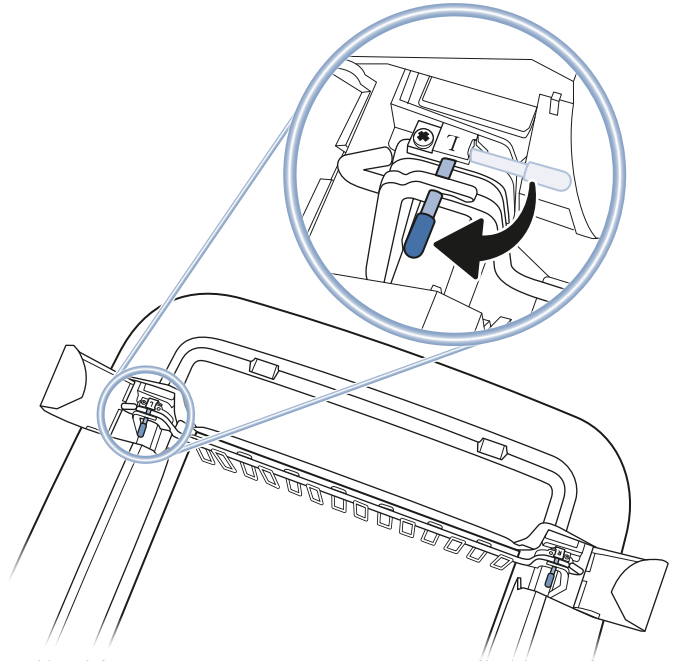

Secure the rake it by rotating the rake clips toward the front of the litter box. Close the rake covers.

9

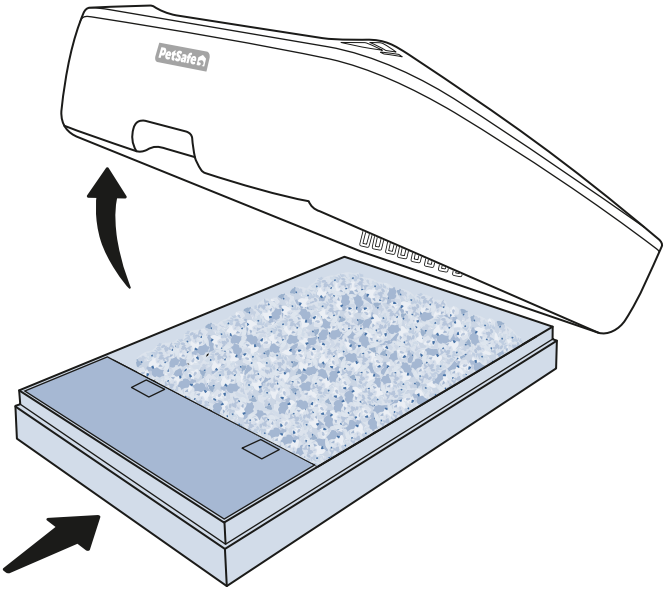

Install a new litter tray.

10

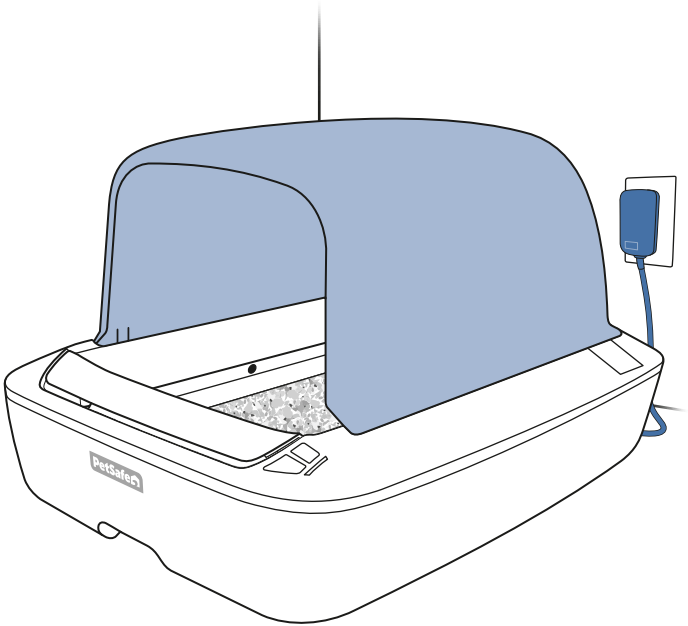

Replace the privacy cover and plug the litter box back in.

ScoopFree® Crystal Pro

Self-Cleaning Litter Box

We're here to help!

For questions or additional tips:
support.petsafe.com

1-Year Limited Warranty | ©2024 Radio Systems Corporation | Models: PAL00-18017 | SFE400-2626
For important safety instructions, please see the customer care guide.